MIAMI-DADE COUNTY
BUILDING CODE COMPLIANCE OFFICE (BCCO)
PRODUCT CONTROL DIVISION

MIAMI-DADE COUNTY, FLORIDA
METRO-DADE FLAGLER BUILDING
140 WEST FLAGLER STREET, SUITE 1603
MIAMI, FLORIDA 33130-1563
(305) 375-2901 FAX (305) 375-2908
www.buildingcodeonline.com

NOTICE OF ACCEPTANCE (NOA)

Delta Doors Manufacturing Corporation
7500 NW 69th Ave
Miami, FL 33166

SCOPE:

This NOA is being issued under the applicable rules and regulations governing the use of construction materials. The documentation submitted has been reviewed by Miami-Dade County Product Control Division and accepted by the Board of Rules and Appeals (BORA) to be used in Miami Dade County and other areas where allowed by the Authority Having Jurisdiction (AHJ).

This NOA shall not be valid after the expiration date stated below. The Miami-Dade County Product Control Division (In Miami Dade County) and/or the AHJ (in areas other than Miami Dade County) reserve the right to have this product or material tested for quality assurance purposes. If this product or material fails to perform in the accepted manner, the manufacturer will incur the expense of such testing and the AHJ may immediately revoke, modify, or suspend the use of such product or material within their jurisdiction. BORA reserves the right to revoke this acceptance, if it is determined by Miami-Dade County Product Control Division that this product or material fails to meet the requirements of the applicable building code.

This product is approved as described herein, and has been designed to comply with the Florida Building Code, including the High Velocity Hurricane Zone.

DESCRIPTION: Series "BAL-350" Outswing Aluminum Storefront Door – S.M.I.

APPROVAL DOCUMENT: Drawing No. **W04-85**, titled "Series BAL-350 Alum Entrance Door – (S.M.I.)", sheets 1 through 5 of 5, dated 10/08/04, with revision A dated 10/17/05, prepared by Al-Farooq Corporation, signed and sealed by Humayoun Farooq, P.E., bearing the Miami-Dade County Product Control Approval stamp with the Notice of Acceptance number and approval date by the Miami-Dade County Product Control Division.

MISSILE IMPACT RATING: Small Missile Impact Resistant

LABELING: Each unit shall bear a permanent label with the manufacturer's name or logo, city, state and following statement: "Miami-Dade County Product Control Approved", unless otherwise noted herein.

RENEWAL of this NOA shall be considered after a renewal application has been filed and there has been no change in the applicable building code negatively affecting the performance of this product.

TERMINATION of this NOA will occur after the expiration date or if there has been a revision or change in the materials, use, and/or manufacture of the product or process. Misuse of this NOA as an endorsement of any product, for sales, advertising or any other purposes shall automatically terminate this NOA. Failure to comply with any section of this NOA shall be cause for termination and removal of NOA.

ADVERTISEMENT: The NOA number preceded by the words Miami-Dade County, Florida, and followed by the expiration date may be displayed in advertising literature. If any portion of the NOA is displayed, then it shall be done in its entirety.

INSPECTION: A copy of this entire NOA shall be provided to the user by the manufacturer or its distributors and shall be available for inspection at the job site at the request of the Building Official.

This NOA consists of this page 1 and evidence page E-1, as well as approval document mentioned above.

The submitted documentation was reviewed by **Manuel Perez, P.E.**

PRODUCT CONTROL ACCEPTED

Delta Doors Manufacturing Corporation

NOTICE OF ACCEPTANCE: EVIDENCE SUBMITTED

A. DRAWINGS

1. Manufacturer's die drawings and sections.
2. Drawing No. **W04-85**, titled "Series BAL-350 Alum Entrance Door (S.M.I.)", sheets 1 through 5 of 5, dated 10/08/04, with revision A dated 10/17/05, prepared by Al-Farooq Corporation, signed and sealed by Humayoun Farooq, P.E.

B. TESTS

1. Test reports on 1) Small Missile Impact Test per FBC, TAS 201-94
   2) Cyclic Wind Pressure Loading per FBC, TAS 203-94
   along with marked-up drawings and installation diagram of **aluminum outswinging door**, prepared by Fenestration Testing Laboratory, Inc., Test Reports No. **FTL-4595,** dated 04/18/05, signed and sealed by Edmundo Largaespada, P. E.
2. Test reports on 1) Air Infiltration Test, per FBC, TAS 202-94
   2) Uniform Static Air Pressure Test, Loading per FBC, TAS 202-94
   3) Water Resistance Test, per FBC, TAS 202-94
   4) Small Missile Impact Test per FBC, TAS 201-94
   5) Cyclic Wind Pressure Loading per FBC, TAS 203-94
   6) Forced Entry Test, per FBC 2411 3.2.1 and TAS 202-94
   along with marked-up drawings and installation diagram of **aluminum outswinging door**, prepared by Fenestration Testing Laboratory, Inc., Test Reports No. **FTL-4256,** dated 07/20/04, signed and sealed by Edmundo Largaespada, P. E.

C. CALCULATIONS

1. Anchor Calculations, and structural analysis complying with FBC-2004, prepared by Al-Farooq Corporation, dated 08/05/05, signed and sealed by Humayoun Farooq, P.E. **Complies with ASTM E1300-98** and **ASTM E1300-02.**

D. QUALITY ASSURANCE

1. Miami Dade /Building Code Compliance Office (BCCO).

E. MATERIAL CERTIFICATIONS

1. Notice of Acceptance No. **02-0828.15** issued to E.I. DuPont de Nemours & Co., Inc. for "Dupont Butacite PVB" dated 11/21/02, expiring on 12/11/05.
2. Notice of Acceptance No. **03-0827.08** issued to Solutia, Inc., for "Solutia Interlayers" dated 03/04/04, expiring on 03/04/09.

F. STATEMENTS

1. Statement letter of no financial interest, dated 08/05/05, signed and sealed by Humayoun Farooq, P.E.
2. Statement letter of code compliance, dated 08/05/05, signed and sealed by Humayoun Farooq, P.E.

G. OTHER

1. None

Manuel Perez, P.E.
Product Control Examiner
NOA No 05-0902.04
Expiration Date: November 3, 2010
Approval Date: November 3, 2005

NOMINAL DIMS.		DESIGN LOAD CAPACITY-PSF	
LEAF HEIGHT INCHES	LEAF WIDTH INCHES	EXT.(+)	INT.(−)
80	24	120.0	120.0
	30	120.0	120.0
	36	120.0	120.0
	42	120.0	120.0
84	24	120.0	120.0
	30	120.0	120.0
	36	120.0	120.0
	42	120.0	120.0
90	24	120.0	120.0
	30	120.0	120.0
	36	120.0	120.0
	42	120.0	120.0
96	24	120.0	120.0
	30	120.0	120.0
	36	120.0	120.0
	42	112.5	112.5
102	24	120.0	120.0
	30	120.0	120.0
	36	120.0	120.0
	42	105.9	105.9
108	24	120.0	120.0
	30	120.0	120.0
	36	116.7	116.7
	42	100.0	100.0

NOTE:
GLASS CAPACITIES ON THIS SHEET ARE BASED ON
A: ASTM E1300-98 (60 SEC. WIND)
B: ASTM E1300-02 (3 SEC. GUSTS)

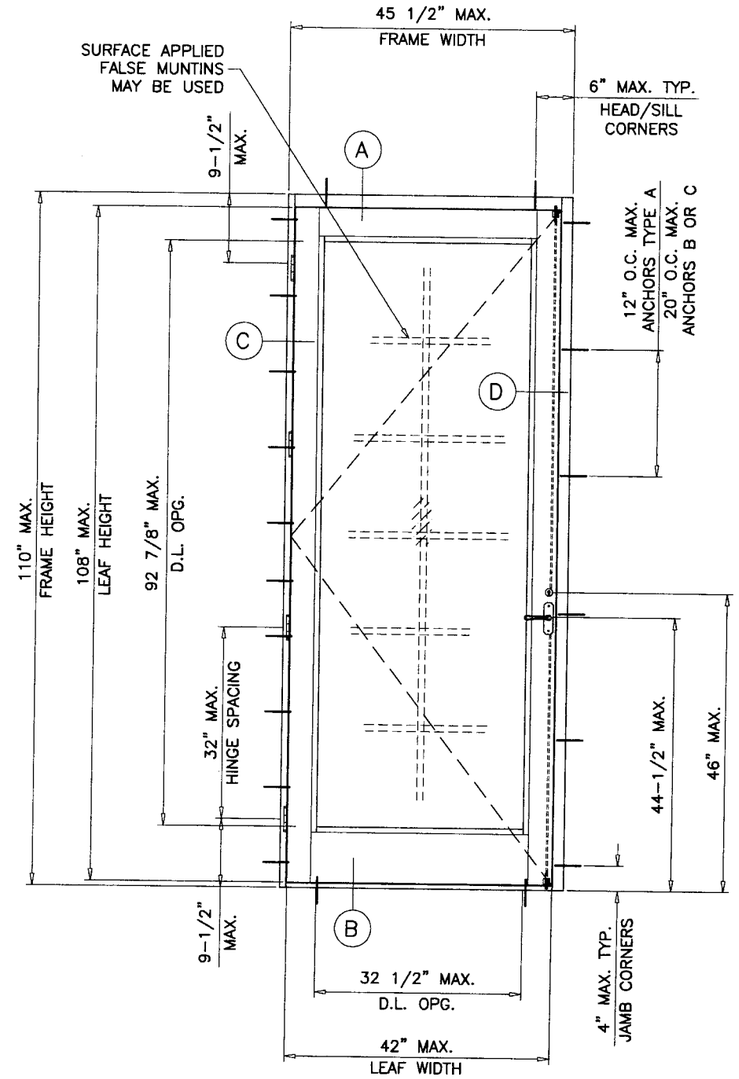

(X)
TYPICAL ELEVATION

SERIES BAL-350
ALUMINUM OUT-SWING ENTRANCE DOOR

THIS PRODUCT HAS BEEN DESIGNED AND TESTED TO COMPLY WITH THE REQUIREMENTS OF THE FLORIDA BUILDING CODE 2004 EDITION INCLUDING HIGH VELOCITY HURRICANE ZONE.

WOOD BUCKS BY OTHERS, MUST BE ANCHORED PROPERLY TO TRANSFER LOADS TO THE STRUCTURE.

ANCHORS SHALL BE AS LISTED, SPACED AS SHOWN ON DETAILS, ANCHORS EMBEDMENT TO BASE MATERIAL SHALL BE BEYOND WALL DRESSING OR STUCCO.

ANCHORING OR LOADING CONDITIONS NOT SHOWN IN THESE DETAILS ARE NOT PART OF THIS APPROVAL.

A 33% INCREASE IN ALLOWABLE STRESS IS USED IN DESIGN OF WOOD ANCHORS ONLY.

ALL STEEL IN CONTACT WITH ALUMINUM TO BE PAINTED OR PLATED.

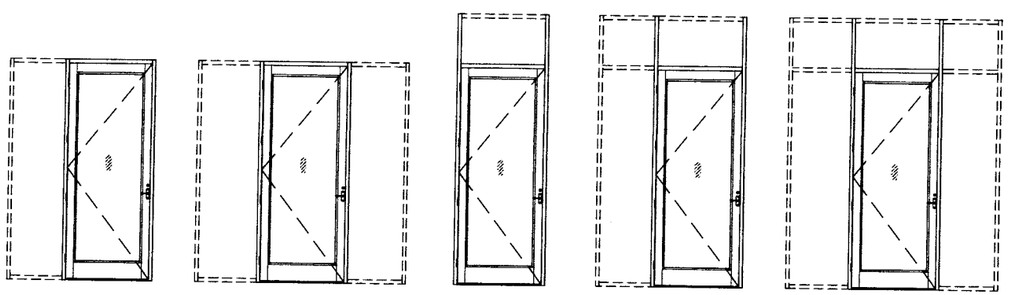

BALCONY DOOR CAN BE USED WITH TRANSOM AND SIDELITES.
FOR LIMITATIONS SEE SEPARATE MIAMI-DADE COUNTY NOA.

THIS PRODUCT RATED FOR SMALL MISSILE IMPACT.
MIAMI-DADE COUNTY APPROVED IMPACT RESISTANT SHUTTERS REQUIRED FOR INSTALLATIONS UP TO 30 FT. OF GRADE
SHUTTERS NOT REQD. FOR INSTALLATIONS ABOVE 30 FT. OF GRADE

Engr: DR. HUMAYOUN FAROOQ
STRUCTURES
FLA. PE # 18557
C.A.N. 3538

OCT 20 2005

Approved as complying with the Florida Building Code
Date NOV. 3, 2005
NOA# 05-0902.04
Miami Dade Product Control Division
By Manuel Perez

AL-FAROOQ CORPORATION
ENGINEERS, PLANNERS & PRODUCT DESIGN
1235 SW 87 AVE
MIAMI, FLORIDA 33174
TEL. (305) 264-8100 FAX. (305) 262-6978
COMP-ANL\W04-85DD

SERIES BAL-350 ALUM ENTRANCE DOOR (S.M.I.)

DELTA DOORS
7191 N.W. 77 TERR.
MIAMI, FL 33166
TEL. (305) 888-0077 FAX. (305) 884-3111

revisions:

no	date	by	description
A	10.17.05		NO CHANGE THIS SHEET

date: 10-08-04
scale: 1/2"=1'-0"
dr. by: HAMID
chk. by:

drawing no.
W04-85

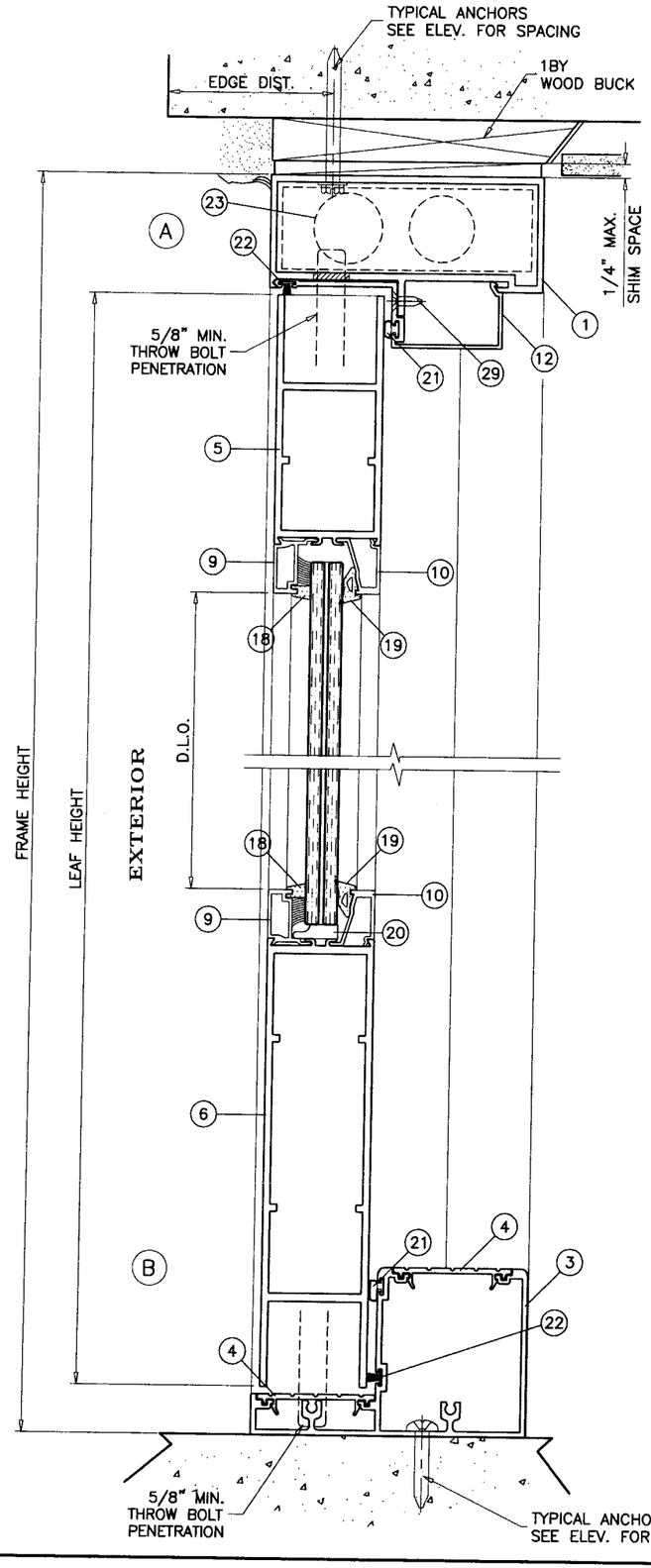

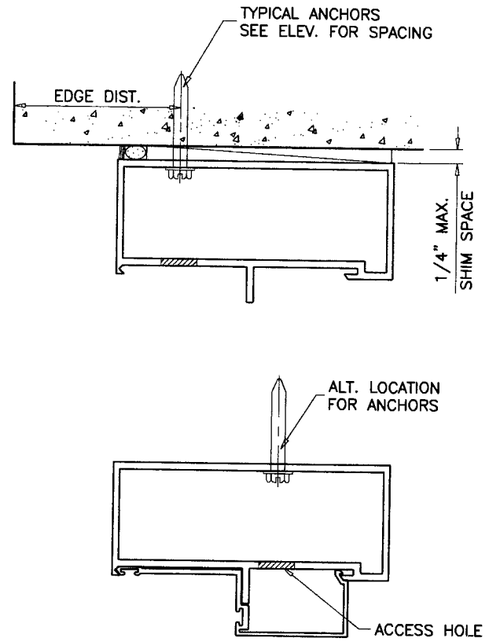

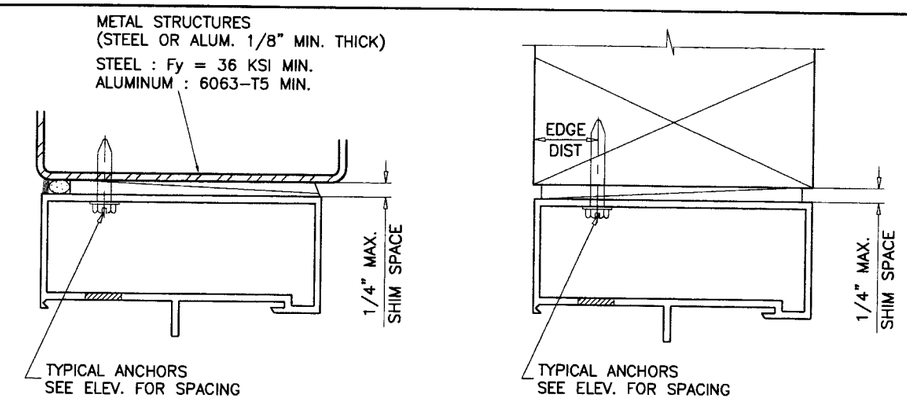

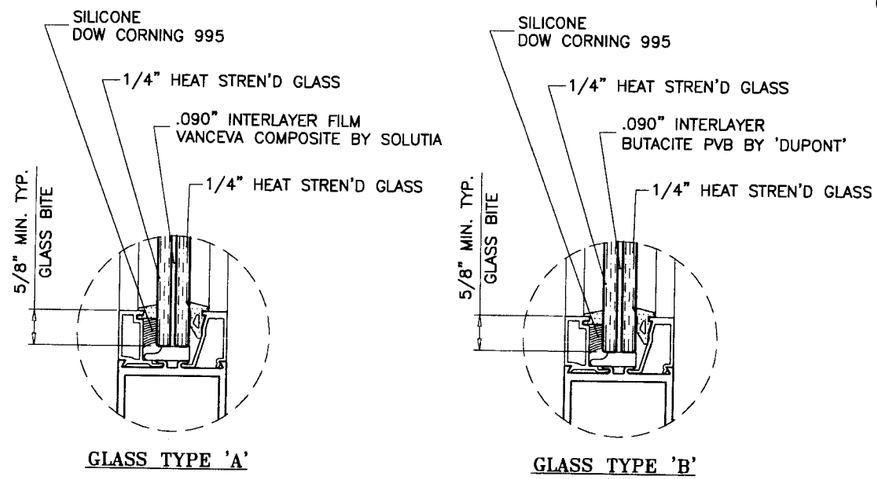

GLASS TYPE 'A'

GLASS TYPE 'B'

GLAZING OPTIONS

WOOD BUCKS AND METAL STRUCTURES NOT BY DELTA DOORS, MUST SUSTAIN LOADS IMPOSED BY GLAZING SYSTEM AND TRANSFER THEM TO THE BUILDING STRUCTURE.

TYPICAL ANCHORS: SEE ELEV. FOR SPACING

A– 1/4" DIA. TAPCONS
INTO 2BY WOOD BUCKS OR WOOD STRUCTURES
1–3/8" MIN. WOOD PENETRATION
THRU 1BY WOOD BUCKS INTO MASONRY OR CONC.
1–1/4" MIN. EMBED INTO MASONRY OR CONC.

B– 1/4" DIA. TAPCONS
DIRECTLY INTO MASONRY OR CONCRETE
1–1/4" MIN. EMBED INTO MASONRY OR CONCRETE

C– #14" TEKS OR SELF DRILLING SCREWS
INTO METAL STRUCTURES (1/8" MIN. THICKNESS)
INTO APPROVED MULLIONS (NO SHIM SPACE)

TYPICAL EDGE DISTANCE
INTO CONCRETE AND MASONRY = 3" MIN.
INTO WOOD STRUCTURE = 1" MIN.

SEALANTS:

FRAME CORNERS, ASSEMBLY SCREWS AND HEADS OF ANCHOR SCREWS AT SILL TO BE SEALED WITH SEALER. LEAF JOINTS SEALED WITH SILICONE.

LOCK:

THREE POINT LOCK SYSTEM WITH SURFACE MOUNT HANDLE AT 44–1/2" FROM BOTTOM.

DEAD BOLT LOCK KEY OPERATED ON EXTERIOR AND THUMBTURN ON INTERIOR, AT 46" FROM BOTTOM.

Engr: DR. HUMAYOUN FAROOQ
STRUCTURES
FLA. PE # 16557
C.A.N. 3538

OCT 2 0 2005

Approved as complying with the Florida Building Code
Date NOV. 3, 2005
NOA# 05-0902.04
Miami Dade Product Control Division
By Manuel Perez

AL-FAROOQ CORPORATION
ENGINEERS, PLANNERS & PRODUCT DESIGN
1235 SW 87 AVE
MIAMI, FLORIDA 33174
TEL. (305) 264-8100 FAX. (305) 262-6978
COMP-ANL\W04-85DD

SERIES BAL-350 ALUM ALUM ENTRANCE DOOR (S.M.I.)

DELTA DOORS
7191 N.W. 77 TERR.
MIAMI, FL 33166
TEL. (305) 888-0077 FAX. (305) 884-3111

revisions:

no	date	by	description
A	10.17.05		REV. PER BCCO COMMENTS

date: 10-08-04
scale: 3/8" = 1"
dr. by: HAMID
chk. by:

drawing no.
W04-85

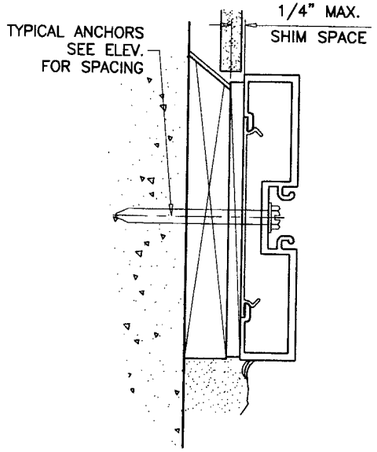

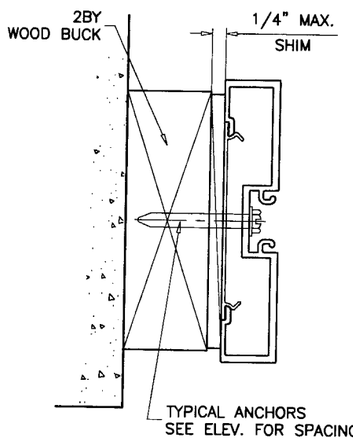

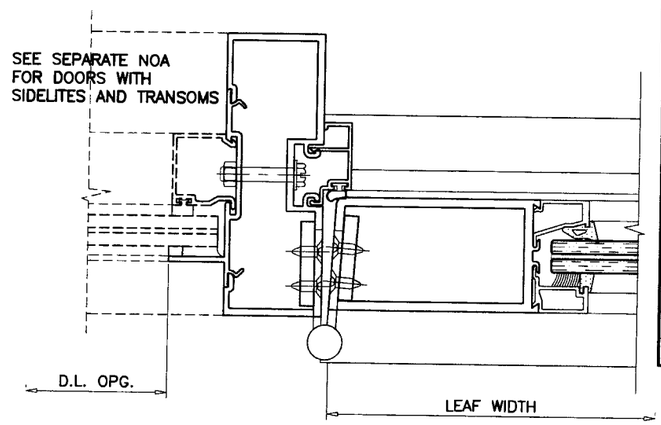

ITEM #	PART #	REQD.	DESCRIPTION	MATERIAL	MANF./SUPPLIER/REMARKS
1	DLD-105	1	FRAME HEAD	6063-T6	–
2	DLD-119	2	FRAME JAMB	6063-T6	–
2A	DLD-124	2	ALT. FRAME JAMB	6063-T6	–
3	DLD-122	1	FRAME SILL	6063-T6	–
4	DLD-123	1	SILL FILLER	6063-T6	–
5	DLD-107M	1/ LEAF	TOP RAIL	6063-T6	–
6	DLD-110M	1/ LEAF	BOTTOM RAIL	6063-T6	–
7	DLD-115	1/ LEAF	LOCK STILE	6063-T6	–
8	DLD-114	1/ LEAF	HINGE STILE	6063-T6	–
9	DLD-108M	4/ LEAF	EXTERIOR GLASS STOP	6063-T6	–
10	DLD-109M	4/ LEAF	INTERIOR GLASS STOP	6063-T6	–
11	BCE-460	2/ DOOR	DOOR STOP JAMB	6063-T6	–
12	DLD-106	1/ DOOR	DOOR STOP HEAD	6063-T6	–
13	BCE-475	AS RQED.	FLAT FILLER	6063-T5	–
14	DH-6	–	END CAP ANGLE	ALUMINUM	4 11/16" LONG
15	DH-4	–	SHEAR BLOCK CHANNEL	ALUMINUM	4 11/16" LONG
16	DLD-3	–	SHEAR CLIP	6063-T5	–
17	–	–	HINGE REINFORCING PLATE	ALUMINUM	1-1/4" X 1/4" X 8" LONG
17A	#12 X 1/2"	4/ PLATE	HINGE PLATE SCREWS	–	FH MS
18	TR-5399S	–	EXTERIOR GASKET	DUROMETER SILICONE	–
19	TR-3235E	–	INTERIOR GASKET	DUROMETER EPDM	–
20	995	–	GLAZING COMPOUND	SILICONE	DOW CORNING
21	BW-75	AS REQD.	BULB W'STRIPPING	VINYL	.375" H X .270 T-SLOT
22	T4216-K	AS REQD.	PILE W'STRIPPING	–	–
23	3031	AS REQD.	OVERHEAD CONCEALED CLOSURE	–	REGENT
24	1350	–	SETTING BLOCK	–	–
25	–	4/ LEAF	BUTT HINGES (4-1/2" X 4")	–	HAGER USA
26	#12 X 1-1/4"	AS REQD.	FRAME ASSEMBLY SCREWS	–	P.H. SMS
27	#12 X 1-1/4"	AS REQD.	FRAME ASSEMBLY SCREWS	–	F.H. SMS
28	1/4-20 X 5/8"	AS REQD.	FRAME ASSEMBLY SCREWS	–	H.H. MACHINE SCREWS
29	10-24 X 1/2"	4/ LEAF	DOOR STOP SCREWS	–	F.H. MACHINE SCREWS
30	12-24 X 1/2"	4/ HASP	HINGE INSTALLATION SCREWS	–	F.H. MACHINE SCREWS

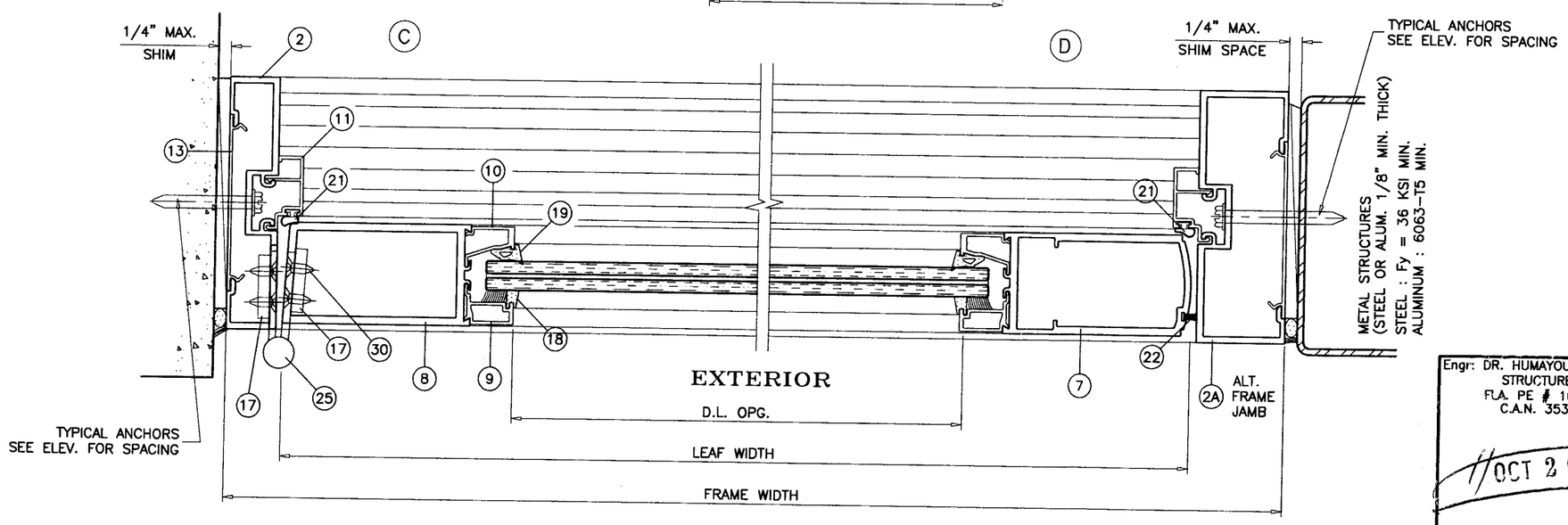

Engr: DR. HUMAYOUN FAROOQ
STRUCTURES
FLA. PE # 16557
C.A.N. 3538

OCT 2 0 2005

Approved as complying with the Florida Building Code
Date NOV. 3, 2005
NOA# 05-0902.04
Miami Dade Product Control Division
By Manuel Perez

AL-FAROOQ CORPORATION
ENGINEERS, PLANNERS & PRODUCT DESIGN
1235 SW 87 AVE
MIAMI, FLORIDA 33174
TEL. (305) 264-8100 FAX. (305) 262-6978
COMP-ANL\W04-85DD

SERIES BAL-350 ALUM ENTRANCE DOOR (S.M.I.)

DELTA DOORS
7191 N.W. 77 TERR.
MIAMI, FL 33166
TEL. (305) 888-0077 FAX. (305) 884-3111

revisions:

no	date	by	description
A	10.17.05		REV. PER BCCO COMMENTS

date: 10-08-04
scale: 3/8" = 1"
dr. by: HAMID
chk. by:

drawing no.
W04-85

sheet 3 of 5

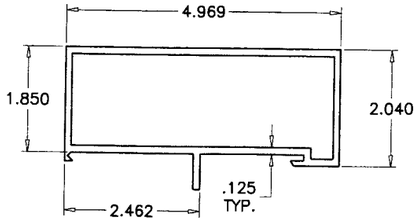

(1) FRAME HEAD

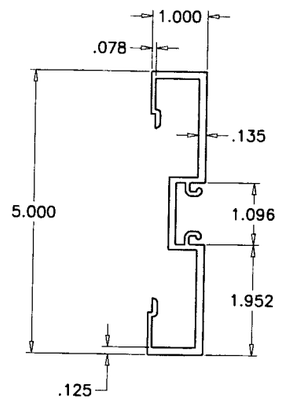

(2) FRAME JAMB

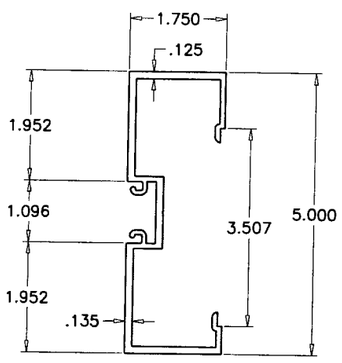

(2A) ALT. FRAME JAMB

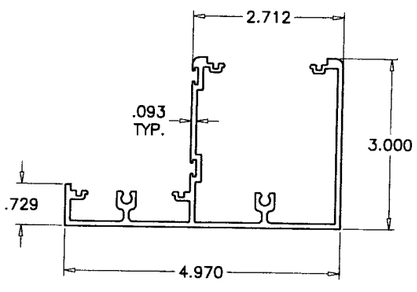

(3) FRAME SILL

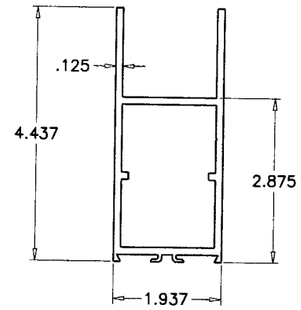

(5) TOP RAIL

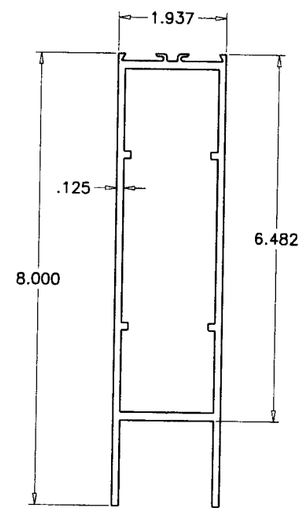

(6) BOTTOM RAIL

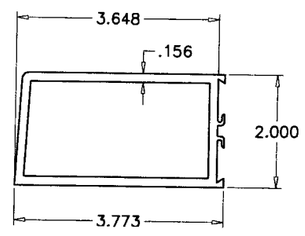

(8) HINGE STILE

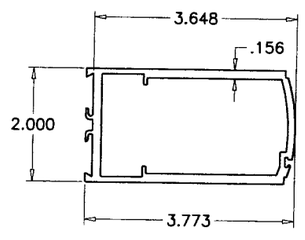

(7) LOCK STILE

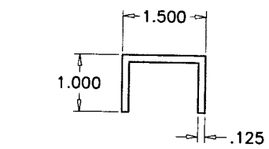

(15) SHEAR BLOCK

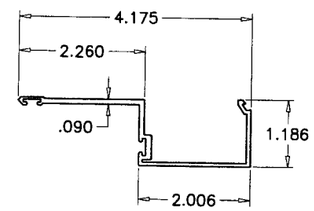

(12) DOOR STOP JAMB

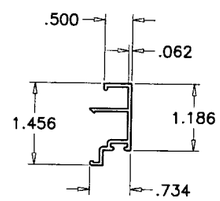

(11) DOOR STOP JAMB

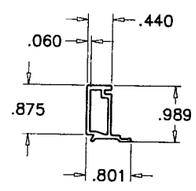

(9) EXTERIOR GLASS STOP

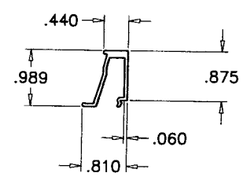

(10) INTERIOR GLASS STOP

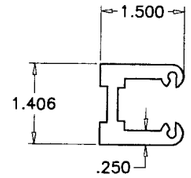

(16) SHEAR CLIP

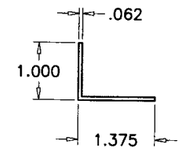

(14) END CAP ANGLE

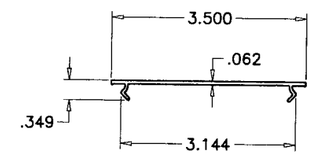

(13) FLAT FILLER

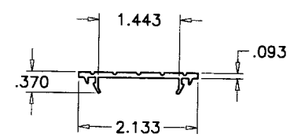

(4) SILL FILLER

Engr: DR. HUMAYOUN FAROOQ
STRUCTURES
FLA. PE # 16557
C.A.N. 3538

OCT 20 2005

Approved as complying with the Florida Building Code
Date NOV 3, 2005
NOA# 05-0502.04
Miami Dade Product Control Division
By Manuel Perez

AL-FAROOQ CORPORATION
ENGINEERS, PLANNERS & PRODUCT DESIGN
1235 SW 87 AVE
MIAMI, FLORIDA 33174
TEL. (305) 264-8100 FAX. (305) 262-6978
COMP-ANL\W04-85DD

SERIES BAL-350 ALUM ENTRANCE DOOR (S.M.I.)

DELTA DOORS
7191 N.W. 77 TERR.
MIAMI, FL 33166
TEL. (305) 888-0077 FAX. (305) 884-3111

revisions:

no	date	by	description
A	10.17.05		REV. PER BCCO COMMENTS

date: 10-08-04
scale: 3/8" = 1"
dr. by: HAMID
chk. by:

drawing no. W04-85

sheet 4 of 5

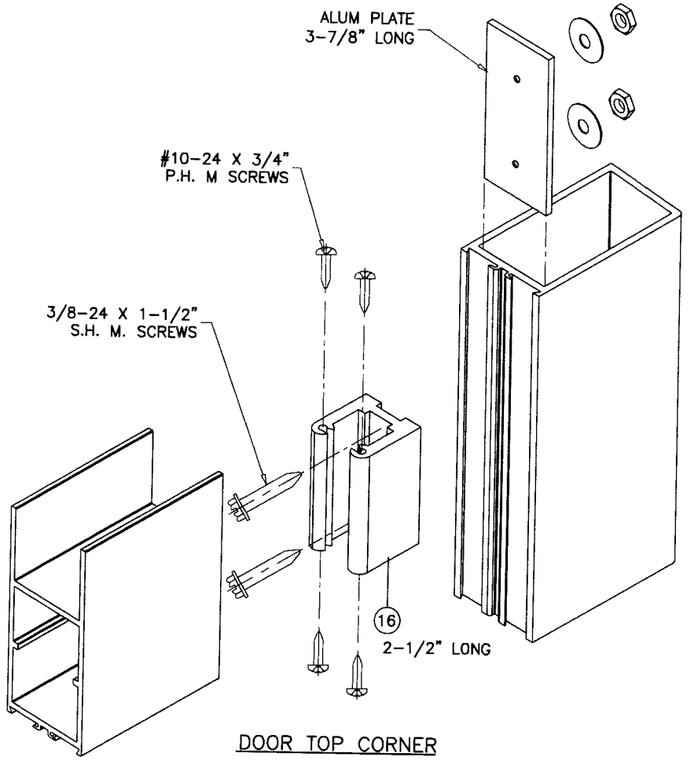

DOOR TOP CORNER

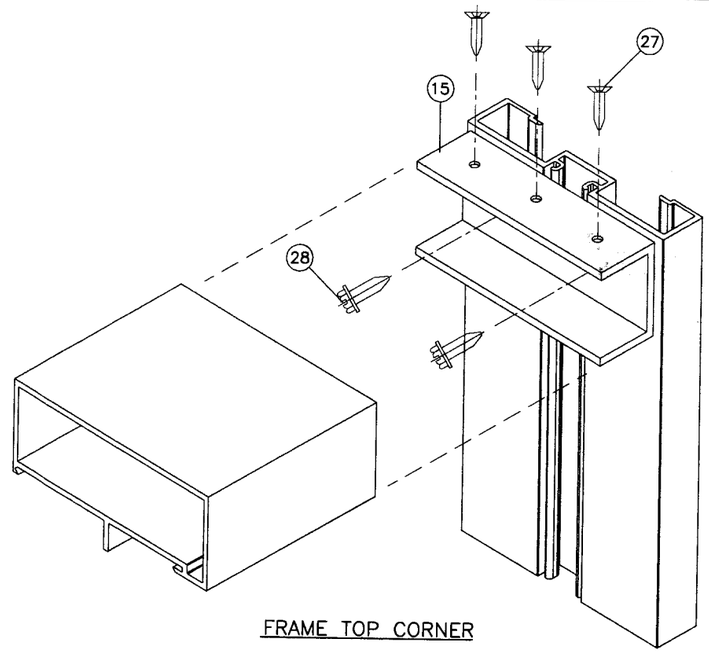

FRAME TOP CORNER

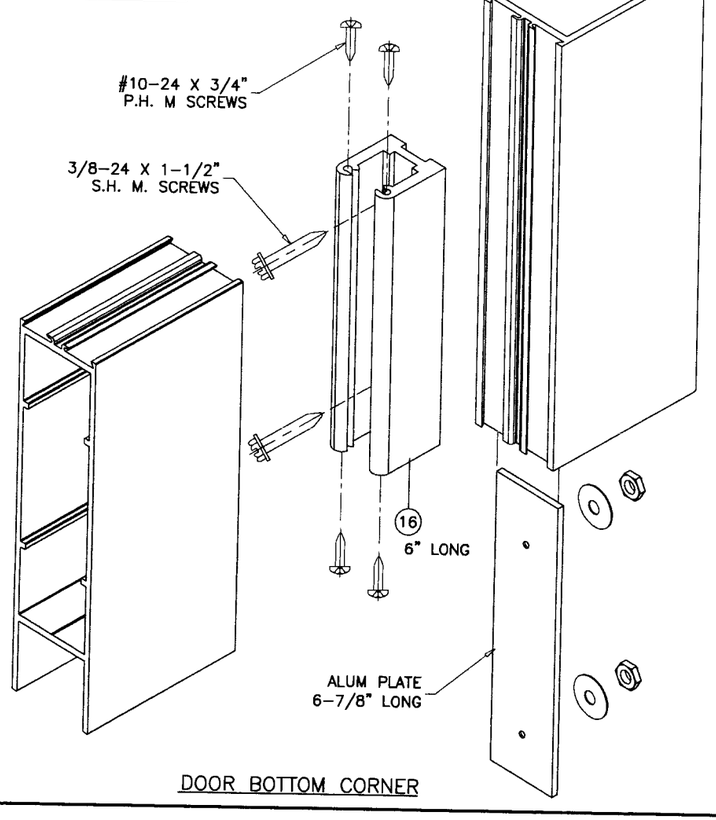

DOOR BOTTOM CORNER

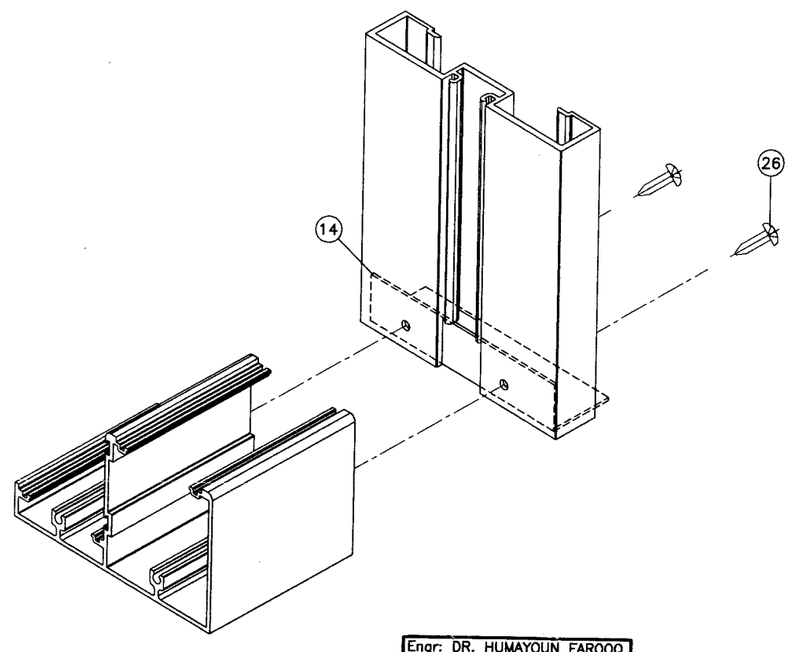

FRAME BOTTOM CORNER

Engr: DR. HUMAYOUN FAROOQ
STRUCTURES
FLA. PE # 16557
C.A.N. 3538

OCT 2 0 2005

Approved as complying with the Florida Buiding Code
Date NOV. 3, 2005
NOA# 05-0902.04
Miami Dade Product Control Division
By Manuel Perez

AL-FAROOQ CORPORATION
ENGINEERS, PLANNERS & PRODUCT DESIGN
1235 SW 87 AVE
MIAMI, FLORIDA 33174
TEL. (305) 264-8100 FAX. (305) 262-6978
COMP-ANL\W04-85DD

SERIES BAL-350 ALUM ENTRANCE DOOR (S.M.I.)

DELTA DOORS
7191 N.W. 77 TERR.
MIAMI, FL 33166
TEL. (305) 888-0077 FAX. (305) 884-3111

revisions:

no	date	by	description
A	10.17.05		REV. PER BCCO COMMENTS

date: 10-08-04
scale: 3/8" = 1"
dr. by: HAMID
chk. by:

drawing no.
W04-85

sheet 5 of 5