MIAMI-DADE COUNTY
BUILDING CODE COMPLIANCE OFFICE (BCCO)
PRODUCT CONTROL DIVISION

MIAMI-DADE COUNTY, FLORIDA
METRO-DADE FLAGLER BUILDING

140 WEST FLAGLER STREET, SUITE 1603
MIAMI, FLORIDA 33130-1563
(305) 375-2901 FAX (305) 375-2908
www.buildingcodeonline.com

NOTICE OF ACCEPTANCE (NOA)

Folding Shutter Corporation
7089 Hemstreet Place
West Palm Beach, Florida 33413

SCOPE:
This NOA is being issued under the applicable rules and regulations governing the use of construction materials. The documentation submitted has been reviewed by Miami-Dade County Product Control Division and accepted by the Board of Rules and Appeals (BORA) to be used in Miami Dade County and other areas where allowed by the Authority Having Jurisdiction (AHJ).

This NOA shall not be valid after the expiration date stated below. The Miami-Dade County Product Control Division (In Miami Dade County) and/or the AHJ (in areas other than Miami Dade County) reserve the right to have this product or material tested for quality assurance purposes. If this product or material fails to perform in the accepted manner, the manufacturer will incur the expense of such testing and the AHJ may immediately revoke, modify, or suspend the use of such product or material within their jurisdiction. BORA reserves the right to revoke this acceptance, if it is determined by Miami-Dade County Product Control Division that this product or material fails to meet the requirements of the applicable building code.

This product is approved as described herein, and has been designed to comply with the High Velocity Hurricane Zone of the Florida Building Code.

DESCRIPTION: "Titan II" Aluminum Accordion Shutter

APPROVAL DOCUMENT: Drawing No. 1173, titled " Titan II Folding Shutter ", sheets 1 through 5 of 5, prepared by W. W. Schaefer Engineering & Consulting, P.A., dated October 03, 2002, last revision B, signed and sealed by W. W. Schaefer, P.E. on August 23, 2005 bearing the Miami-Dade County Product Control Revision stamp with the Notice of Acceptance number & expiration date by Miami-Dade County Product Control Division.

MISSILE IMPACT RATING: Large and Small Missile Impact

LABELING: Each unit shall bear a permanent label with the manufacturer's name or logo, city, state and the following statement: "Miami-Dade County Product Control Approved", unless otherwise noted herein.

RENEWAL of this NOA shall be considered after a renewal application has been filed and there has been no change in the applicable building code negatively affecting the performance of this product.

TERMINATION of this NOA will occur after the expiration date or if there has been a revision or change in the materials, use, and/or manufacture of the product or process. Misuse of this NOA as an endorsement of any product, for sales, advertising or any other purposes shall automatically terminate this NOA. Failure to comply with any section of this NOA shall be cause for termination and removal of NOA.

ADVERTISEMENT: The NOA number preceded by the words Miami-Dade County, Florida, and followed by the expiration date may be displayed in advertising literature. If any portion of the NOA is displayed, then it shall be done in its entirety.

INSPECTION: A copy of this entire NOA shall be provided to the user by the manufacturer or its distributors and shall be available for inspection at the job site at the request of the Building Official.

This NOA **revises & renews NOA # 05-0119.01** and consists of this page 1, evidence submitted pages E-1 through E-4 as well as approval document mentioned above.

The submitted documentation was reviewed by **Helmy A. Makar, P.E.**

PRODUCT CONTROL ACCEPTED

Helmy A. Makar
05/04/2006

NOA No 05-0908.01
Expiration Date: 04/09/2011
Approval Date: 05/04/2006

Folding Shutter Corporation

NOTICE OF ACCEPTANCE: EVIDENCE SUBMITTED

1. EVIDENCE SUBMITTED UNDER PREVIOUS APPROVAL # 94-0916.10

A. TESTS:

1. *Test report on Uniform Static Air Pressure Test of Accordion Shutter, prepared by Hurricane Engineering & Testing, Inc., Report No.HETI-94-191, dated 07/15/94, signed and sealed by Arshad Viqar, P.E.*
2. *Test report on Large Missile Impact Test and Cyclic Wind Pressure Test of accordion shutter, prepared by Hurricane Engineering & Testing, Inc., Report No. HETI-94-195, dated 07/16/94, signed and sealed by Arshad Viqar, P.E.*

B. DRAWINGS:

1. *Drawing No. 94-63 "Accordion Shutter Details", sheets 1 and 2 of 2, prepared by Al-Farooq Corporation, dated 08/25/94, revised on 10/05/94, signed and sealed by Humayoun Farooq, P.E.*

C. MATERIAL CERTIFICATION:

1. *Mill Certified Test Report issued by William L. Bonnell Co., Inc. dated 09/13/94 with chemical composition and mechanical properties for aluminum alloy 6063-T6.*
2. *Tensile Test Report No. HETI-94-T20, prepared by Hurricane Engineering & Testing Inc. dated 09/15/94*

D. CALCULATIONS:

1. *Anchor analysis dated 10/06/94, Pages 1 thru 10 of 10, prepared by Al-Farooq Corp., signed and sealed by Humayoun Farooq, P.E.*

2. EVIDENCE SUBMITTED UNDER PREVIOUS APPROVAL # 96-1112.02

A. DRAWINGS:

1. *Drawing prepared by Al-Farooq Corporation titled "Titan II Folding Shutter", Drawing No. 94-63, dated 08/25/94, revision E dated 03/19/98, sheets 1 through 5 of 5, signed and sealed by Humayoun Farooq, P.E.*

B. TESTS:

1. *Test report on Uniform Static Air Pressure Test of accordion shutter, prepared by Hurricane Engineering & Testing, Inc., Report No.HETI-96-542, dated 04/17/96, signed and sealed by Hector M. Medina, P.E.*
2. *Test report on Large Missile Impact Test and Cyclic Wind Pressure Test of accordion shutter, prepared by Hurricane Engineering & Testing, Inc., Report No.HETI-96-541, dated 04/03/96, signed and sealed by Hector M. Medina, P.E.*

Helmy A. Makar

Helmy A. Makar, P. E.
Product Control Examiner
NOA No 05-0908.01
Expiration Date: 04/09/2011
Approval Date: 05/04/2006

3. *Test report on Large Missile Impact Test, Cyclic Wind Pressure Test and Uniform Static Air Pressure Test of accordion shutter, prepared by Hurricane Test Laboratory, Inc., Report No. 0143-0806-97, dated 08/08/97, signed and sealed by Timothy S. Marshall, P.E.*

C. CALCULATIONS:

1. *Anchor analysis dated 09/30/96, prepared by Al-Farooq Corp., signed and sealed by Humayoun Farooq, P.E.*
2. *Anchor analysis dated 12/22/97, prepared by Al-Farooq Corp., signed and sealed by Humayoun Farooq, P.E.*
3. *Anchor analysis dated 03/19/98, prepared by Al-Farooq Corp., signed and sealed by Humayoun Farooq, P.E.*

3. EVIDENCE SUBMITTED UNDER PREVIOUS APPROVAL # 01-0118.03

A. DRAWINGS:

1. *None.*

B. TESTS:

1. *None.*

C. CALCULATIONS:

1. *None.*

D. MATERIAL CERTIFICATION:

1. *None.*

4. EVIDENCE SUBMITTED UNDER PREVIOUS APPROVAL # 02-1224.03

A. DRAWINGS

1. *Drawing No. 1173, titled " Titan II Folding Shutter ", sheets 1 through 5 of 5, prepared by W. W. Schaefer Engineering & Consulting, P.A., dated October 03, 2002, signed and sealed by Warren W. Schaefer, P.E. on June 05, 2003.*

B. TESTS

1. *Test report on Large Missile Impact Test, Cyclic Wind Pressure Test and Uniform Static Air Pressure Test of accordion shutter, prepared by Hurricane Test Laboratory, Inc., Report No. 0143-0408-02, dated 11/12/02, signed and sealed by Vinu J. Abraham, P.E.*

Helmy A. Makar, P. E.
Product Control Examiner
NOA No 05-0908.01
Expiration Date: 04/09/2011
Approval Date: 05/04/2006

C. CALCULATIONS

1. *Anchor analysis, 12 Pages, prepared by W. W. Schaefer Engineering & Consulting, P.A., dated October 15, 2002, signed and sealed by Warren W. Schaefer, P.E.*

D. MATERIAL CERTIFICATIONS

1. *Tensile Test Report No. 2KM-1334, prepared by QC Metallurgical, Inc., dated December 06, 2002.*

5. EVIDENCE SUBMITTED UNDER PREVIOUS APPROVAL # 04-1103.01

A. DRAWINGS

1. *Drawing No. 1173, titled " Titan II Folding Shutter ", sheets 1 through 5 of 5, prepared by W. W. Schaefer Engineering & Consulting, P.A., dated October 03, 2002, last revision A, signed and sealed by Warren W. Schaefer, P.E. on October 28, 2004.*

B. TESTS

1. *Test report on Large Missile Impact Test, Cyclic Wind Pressure Test and Uniform Static Air Pressure Test of accordion shutter, prepared by Hurricane Test Laboratory, Inc., Report No. 0143-0408-02, dated 05/07/04, signed and sealed by Vinu J. Abraham, P.E.*

C. QUALITY ASSURANCE

1. *By Miami-Dade County Building Code Compliance Office.*

D. CALCULATIONS

1. *None.*

E. MATERIAL CERTIFICATIONS

1. *Tensile Test Report No. 2KM-1334, prepared by QC Metallurgical, Inc., dated December 06, 2002.*

6. EVIDENCE SUBMITTED UNDER PREVIOUS APPROVAL # 05-0119.01

A. DRAWINGS

1. *Drawing No. 1173, titled " Titan II Folding Shutter ", sheets 1 through 5 of 5, prepared by W. W. Schaefer Engineering & Consulting, P.A., dated October 03, 2002, last revision A, signed and sealed by Warren W. Schaefer, P.E. on January 05, 2005.*

B. TESTS

1. *None.*

Helmy A. Makar, P. E.
Product Control Examiner
NOA No 05-0908.01
Expiration Date: 04/09/2011
Approval Date: 05/04/2006

C. QUALITY ASSURANCE

1. *By Miami-Dade County Building Code Compliance Office.*

D. CALCULATIONS

1. *Design analysis and Anchor calculations, 50 Pages, prepared by W. W. Schaefer Engineering & Consulting, P.A., dated January 04, 2005, signed and sealed by Warren W. Schaefer, P.E.*

E. MATERIAL CERTIFICATIONS

1. *None.*

7. NEW EVIDENCE SUBMITTED

A. DRAWINGS

1. *Drawing No. 1173, titled " Titan II Folding Shutter ", sheets 1 through 5 of 5, prepared by W. W. Schaefer Engineering & Consulting, P.A., dated October 03, 2002, last revision B, signed and sealed by Warren W. Schaefer, P.E. on August 23, 2005.*

B. TESTS

1. *None.*

C. QUALITY ASSURANCE

1. *By Miami-Dade County Building Code Compliance Office.*

D. CALCULATIONS

1. *Design analysis and Anchor calculations letter prepared by W. W. Schaefer Engineering & Consulting, P.A., dated August 23, 2005, signed and sealed by Warren W. Schaefer, P.E.*

E. MATERIAL CERTIFICATIONS

1. *None.*

Helmy A. Makar, P. E.
Product Control Examiner
NOA No 05-0908.01
Expiration Date: 04/09/2011
Approval Date: 05/04/2006

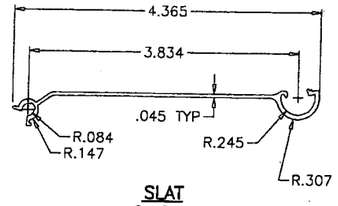

SLAT
6063–T6

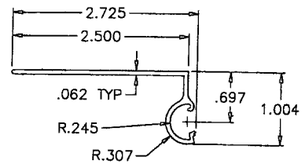

WALL MOUNT SLAT
6063–T5

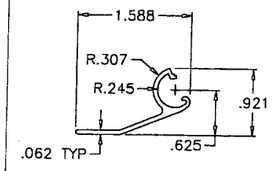

FEMALE END SLAT
6063–T5

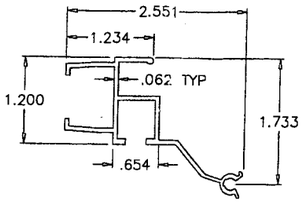

MALE LOCKING SLAT
6063–T6

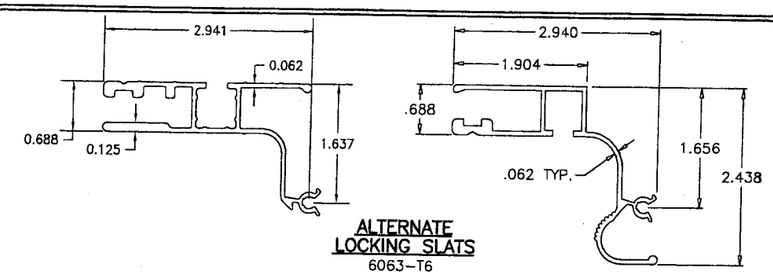

ALTERNATE LOCKING SLATS
6063–T6

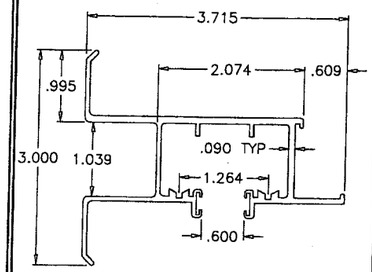

WALL HEADER
6063–T5

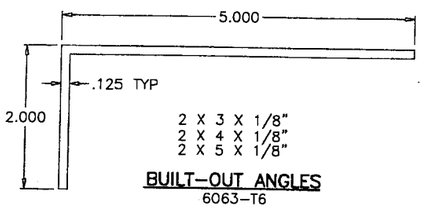

BUILT–OUT ANGLES
6063–T6

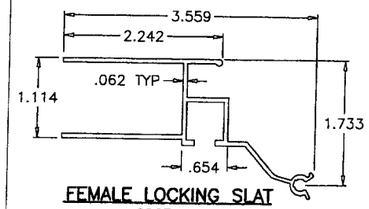

FEMALE LOCKING SLAT
6063–T6

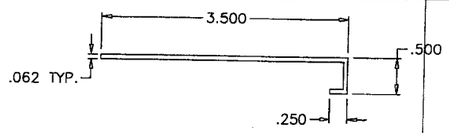

BOTTOM RAIN GUARD (OPTIONAL)
(NON STRUCTURAL)
6063–T6

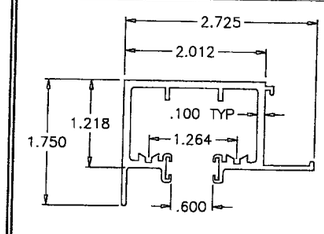

CEILING HEADER
6063–T5

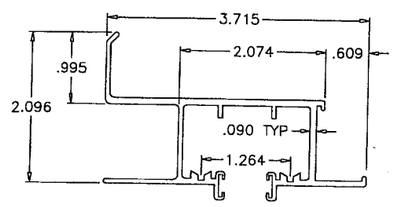

ALT. WALL HEADER
6063–T5

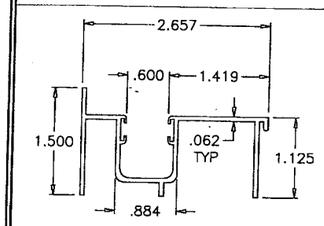

BOTTOM SILL TRACK
6063–T6

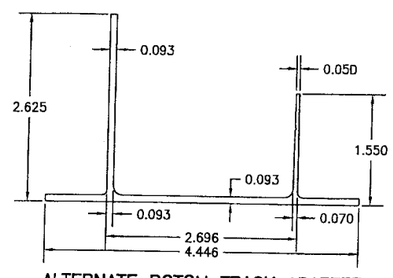

ALTERNATE BOTOM TRACK ADAPTER
6063–T5 ALUMINUM

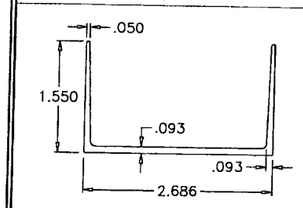

BOTTOM TRACK ADAPTER
6063–T6

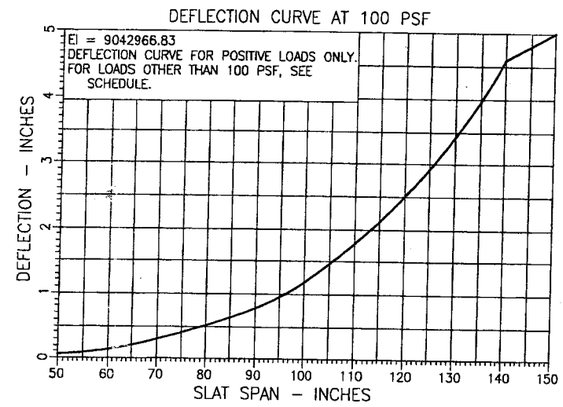

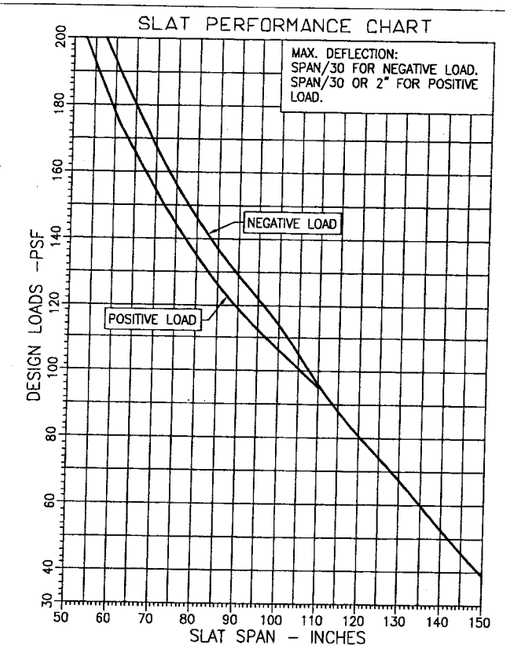

USE SLAT PERFORMANCE CHART TO VERIFY SLAT CAPACITY FOR THE REQUIRED DESIGN LOAD FOR THE PARTICULAR LOCATION. USE SPAN DEFLECTION CHART TO CALCULATE SEPARATION FROM GLASS.

GENERAL NOTES

1. THESE SHUTTERS ARE DESIGNED PER THE 2004 FLORIDA BUILDING CODE (FBC) INCLUDING HIGH VELOCITY HURRICAN ZONES (HVHZ).
2. DESIGN CRITERIA FOR ALUMINUM, MINIMUM MECHANICAL PROPERTIES, AND SAFETY FACTORS ARE IN ACCORDANCE WITH THE "ALUMINUM CONSTRUCTION MANUAL" LATEST EDITION.
3. ALL EXTRUSIONS SHALL BE ALLOYS AS SHOWN ON DETAILS.
4. STEEL SURFACES TO BE PLACED IN CONTACT WITH ALUMINUM SHALL BE GIVEN ONE COAT OF ZINC CHROMATE PRIMER IN ACCORDANCE WITH FEDERAL SPEC. NO. TTP–645, OR BE GALVANIZED.
5. ANCHORS SHALL BE AS LISTED, SPACED AS SHOWN ON DETAILS. ANCHOR EMBEDMENT TO BASE MATERIAL SHALL BE BEYOND WALL DRESSING OR STUCCO.
6. ALL BOLTS, NUTS AND WASHERS SHALL BE STAINLESS STEEL OR ALUMINUM ALLOY 2024–T4 OR 7075–T6.
7. DESIGN CRITERIA FOR SLATS: MAX DEFLECTION ≤ L/30 FOR NEGATIVE PRESSURE AND THE LESSER OF L/30 OR 2" FOR POSITIVE PRESSURE.
8. ANCHORING OR LOADING CONDITIONS OTHER THAN THOSE SHOWN IN THESE DETAILS ARE NOT PART OF THIS APPROVAL.

MINIMUM SEPARATION FROM GLASS

SEPARATION REQD. DUE TO WIND LOAD		SEPARATION REQD. DUE TO LARGE MISSILE IMPACT	
		SLAT SPAN UPTO	SEPARATION
SHUTTER SPAN = H =	IN.		
DESIGN LOAD = Pd =	PSF		
FACTOR = K = Pd/100 =	IN.	96–1/2"	2–1/4"
READING FROM SPAN D. CURVE = D =	IN.		
DEFLECTION AT Pd = K*D =	IN.	147"	3–1/4"
MIN. SEPARATION REQD. = K*D+1" =	IN.	–	–

FOR INSTALLATIONS UPTO 30' OF GRADE USE MAXIMUM OF WIND LOAD OR IMPACT LOAD REQUIREMENTS SHOWN ABOVE

FOR INSTALLATIONS ABOVE 30' OF GRADE IGNORE LARGE MISSILE IMPACT REQUIREMENT.

NOTE: NO PART OF SHUTTER SHALL BE UNDER 30' ABOVE GRADE TO WAIVE LARGE MISSILE IMPACT REQUIREMENT.

PRODUCT MARKING

A LABEL SHALL BE AFFIXED ON LOCKING MEMBER OF UNIT ABOVE THE LOCK WITH FOLLOWING STATEMENT

FOLDING SHUTTER CORP. WEST PALM BEACH, FL
"DADE COUNTY PRODUCT CONTROL APPROVED"

PRODUCT REVISED
as complying with the Florida Building Code
Acceptance No 05-0908.01
Expiration Date 04/09/2011
By Helmy A. Hafez
Miami Dade Product Control Division

NO.	REVISION DESCRIPTION	BY	DATE
B1	UPDATED GENERAL NOTES TO 2004 CODE COMPLIANT	W.W.S.	08/23/05

DRAWN BY: W.W.S. | CHECKED BY: W.W.S.
PLOT: 1=1 | DATE: 10/03/02

DRAWING TITLE: TITAN II FOLDING SHUTTER

MANUFACTURER: FOLDING SHUTTER CORP.
7089 HEMSTREET PLACE
WEST PALM BEACH, FL 33406
561–683–4811

CONSULTANTS
W. W. SCHAEFER ENGINEERING & CONSULTING, P.A.
8895 N. MILITARY TRAIL; SUITE C–204
PALM BEACH GARDENS, FL 33410
PHONE: 561–775–4902 FAX: 561–775–4903

CERTIFICATION
AUG 23 2005
WARREN W. SCHAEFER, P.E.
P.E. NO. 44135

DRAWING NO. 1173 | REV. B
SHEET NO. 1 OF 5

WALL MOUNTS

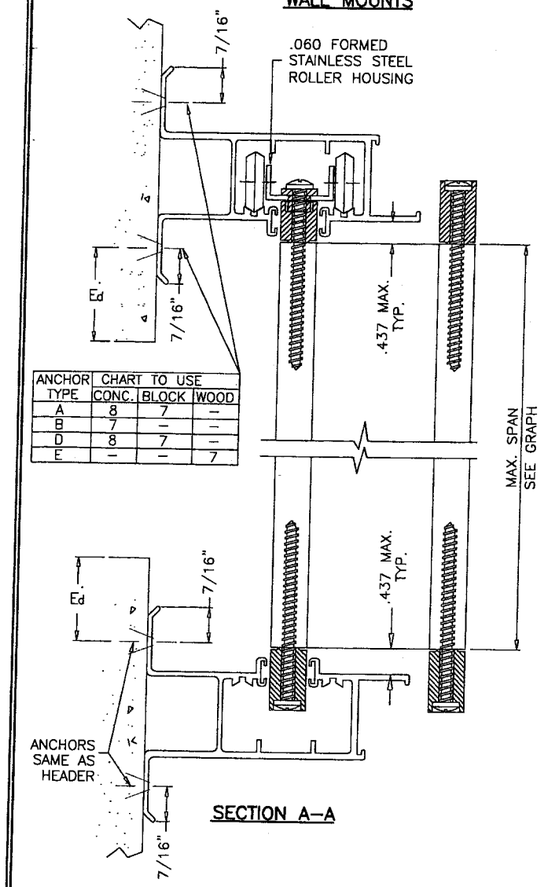

ANCHOR TYPE	CHART TO USE CONC.	BLOCK	WOOD
A	8	7	–
B	7	–	–
D	8	7	–
E	–	–	7

SECTION A–A

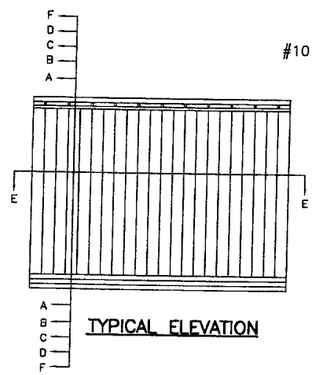

TYPICAL ELEVATION

INSIDE MOUNTS

ANCHOR TYPE	CHART TO USE CONC.	BLOCK	WOOD
A	6	4	–
B	2	–	–
D	6	4	–
E	–	–	3

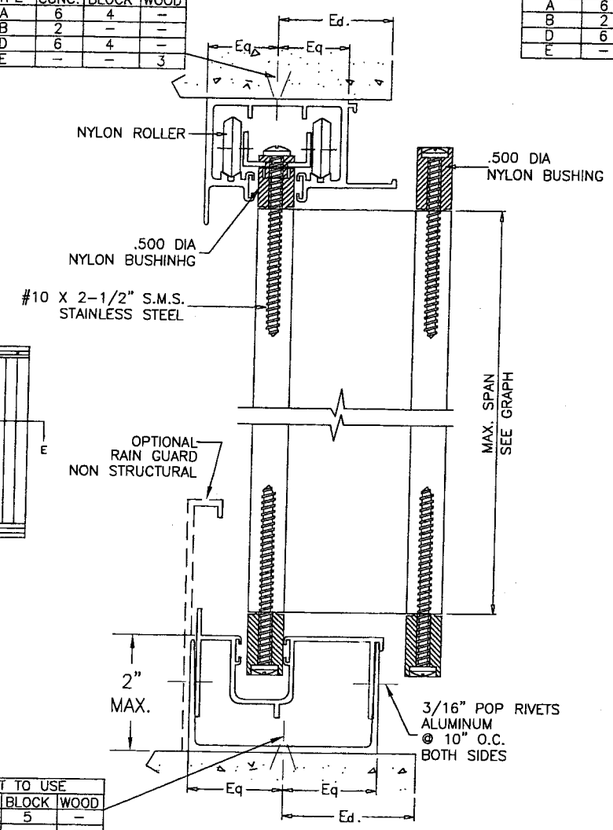

ANCHOR TYPE	CHART TO USE CONC.	BLOCK	WOOD
A	7	5	–
B	3	–	–
D	7	5	–
E	–	–	4

SECTION B–B

SEE ALTERNATE SECTIONS B–B FOR ALTERNATE TRACK ADAPTER

BUILT–OUT CONDITION

ANCHOR TYPE	CHART TO USE CONC.	BLOCK	WOOD
A	6	3	–
B	2	–	–
D	6	3	–
E	–	–	3

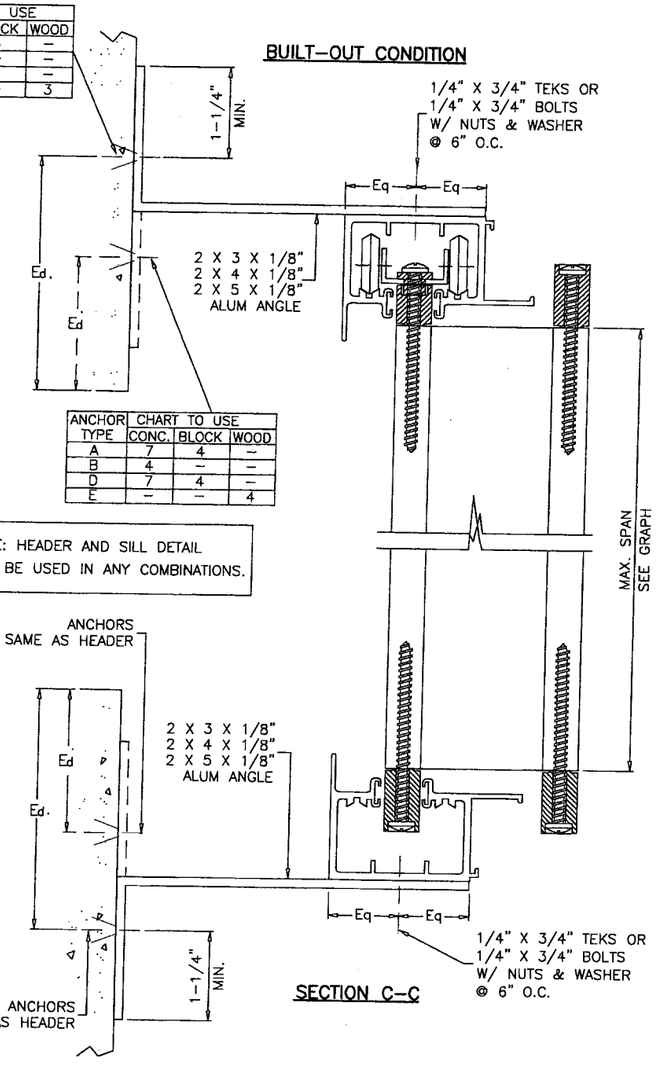

ANCHOR TYPE	CHART TO USE CONC.	BLOCK	WOOD
A	7	4	–
B	4	–	–
D	7	4	–
E	–	–	4

NOTE: HEADER AND SILL DETAIL CAN BE USED IN ANY COMBINATIONS.

SECTION C–C

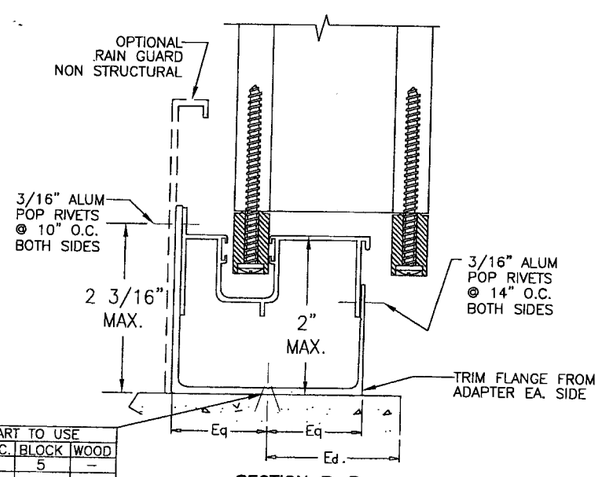

ANCHOR TYPE	CHART TO USE CONC.	BLOCK	WOOD
A	7	5	–
B	3	–	–
D	7	5	–
E	–	–	4

SECTION B–B

ALTERNATE BOTTOM TRACK ADAPTER WITHOUT FLANGES

(SAME AS WITH FLANGES EXCEPT WITHOUT FLANGES)

NOTE: ANCHOR SPACING SPECIFIED IN CHARTS IS TO BE CONSIDERED AS OVERALL SPACING BETWEEN ANCHORS. EACH ROW WILL HAVE A SPACING OF 2 TIMES THAT SPECIFIED IN THE CHARTS WITH EACH ROW STAGGERED SUCH THAT THE OVERALL SPACING IS THAT SPECIFIED IN THE CHARTS.

ANCHOR TYPE	CHART TO USE CONC.	BLOCK	WOOD
A	7	5	–
B	3	–	–
D	7	5	–
E	–	–	4

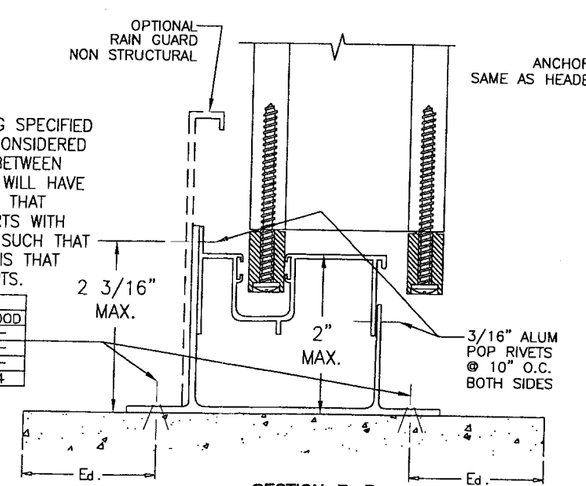

SECTION B–B

ALTERNATE BOTTOM TRACK ADAPTER WITH FLANGES

FOR GENERAL NOTES AND EXTRUSION DETAILS SEE SHEET 1 OF 5.
FOR WOOD INSTALLATIONS SEE SHEET 4 OF 5.
FOR ANCHOR CHARTS SEE SHEET 5 OF 5.

Ed = TYPICAL EDGE DISTANCE
CONC. & BLOCK = 12d (12 ANCHOR DIAMETERS)
WOOD = 5d
FOR LESSER EDGE DISTANCES SEE SHEET 5 OF 5.

ANCHORS: EMBEDMENT & EDGE DISTANCES SHOWN ARE BEYOND THE WALL & FLOOR COVERING (STUCCO, TILES, ETC.)

PRODUCT REVISED
as complying with the Florida Building Code
Acceptance No. 05-0908.01
Expiration Date 04/09/2011
By Helmy A. Melek
Miami Dade Product Control Division

NO.	REVISION DESCRIPTION	BY	DATE
A1	CHANGED TRACK DIMENSION IN SECTIONS B–B TO 2" TRACK HEIGHT AND RIVET SPACING TO 10"	WWS	01/12/04

DRAWN BY: W.W.S. | CHECKED BY: W.W.S.
PLOT: 1=1 | DATE: 10/03/02

DRAWING TITLE: TITAN II FOLDING SHUTTER

MANUFACTURER: FOLDING SHUTTER CORP.
7089 HEMSTREET PLACE
WEST PALM BEACH, FL 33406
561–683–4811

CONSULTANTS
W. W. SCHAEFER ENGINEERING & CONSULTING, P.A.
8895 N. MILITARY TRAIL; SUITE C–204
PALM BEACH GARDENS, FL 33410
PHONE: 561–775–4902 FAX: 561–775–4903

CERTIFICATION
AUG 2 2 2005
WARREN W. SCHAEFER, P.E.
P.E. NO. 44135

DRAWING NO. 1173 | REV. B

SHEET NO. 2 OF 5

ALT. WALL MOUNTS

ANCHOR TYPE	CHART TO USE CONC.	BLOCK	WOOD
A	2	1	–
B	1	–	–
D	3	1	–
E	–	–	1

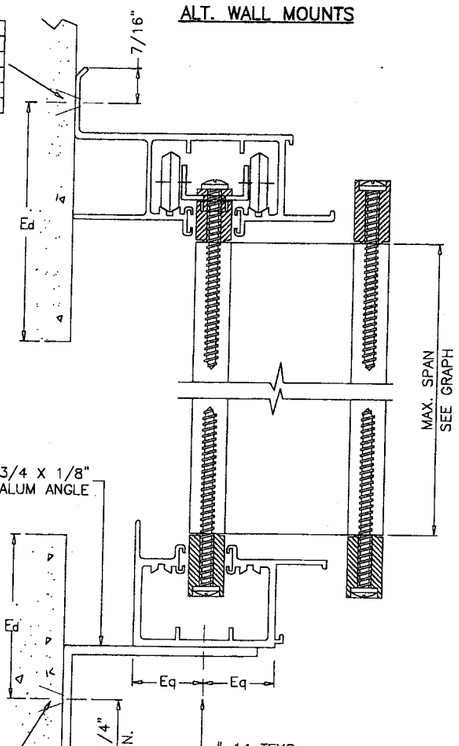

ANCHOR TYPE	CHART TO USE CONC.	BLOCK	WOOD
A	5	2	–
B	2	–	–
D	5	2	–
E	–	–	2

SECTION D–D

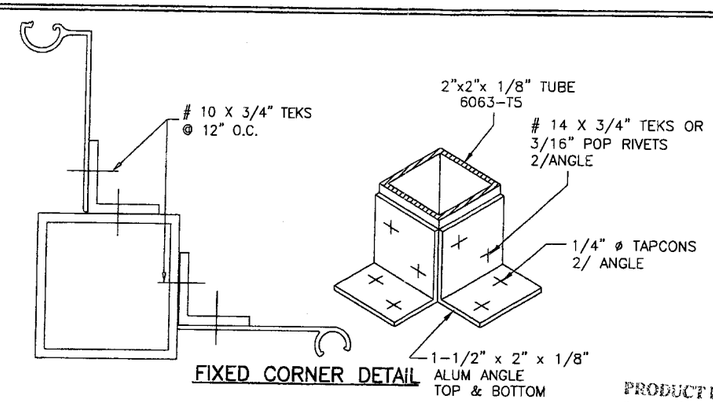

FIXED CORNER DETAIL

PRODUCT REVISED
as complying with the Florida
Building Code
Acceptance No. 05-0908.01
Expiration Date 04/09/2011
By Helena A. Molina
Miami Dade Product Control
Division

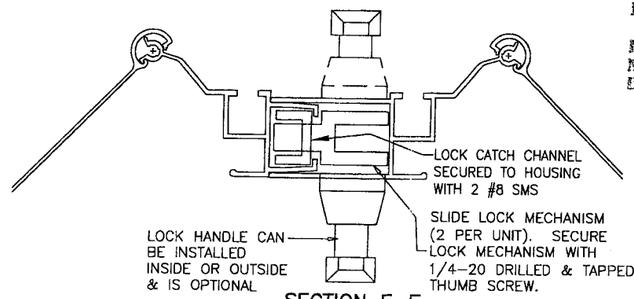

SECTION E–E
ALTERNATE SLIDE LOCK

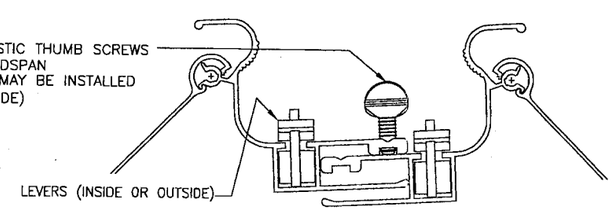

ALT LOCKING SLATS

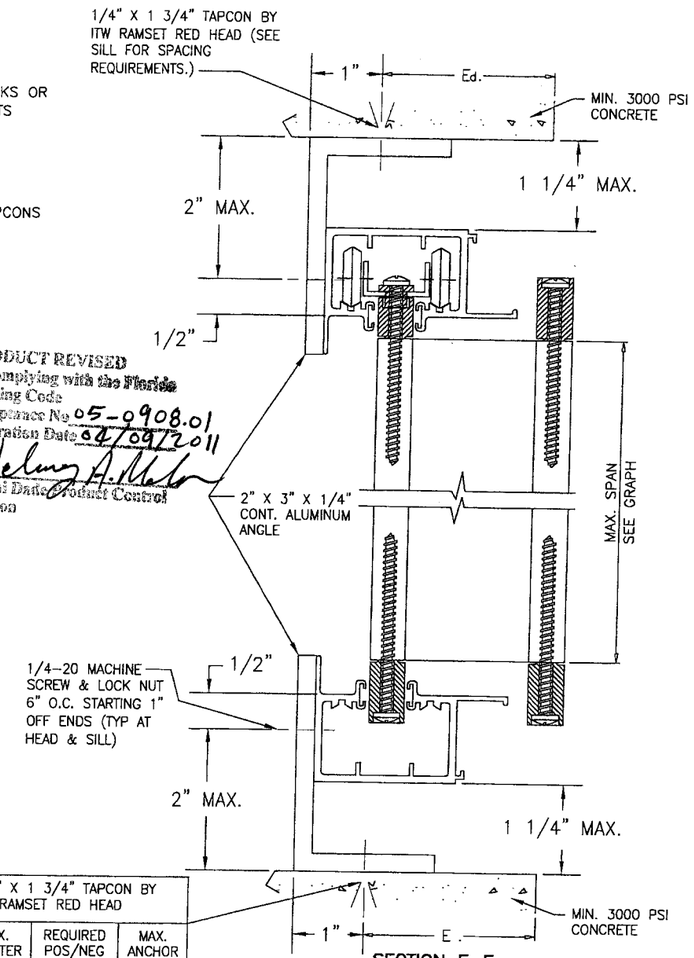

SECTION F–F

SEE SECTIONS B–B FOR DETAIL NOT SHOWN.

1/4" X 1 3/4" TAPCON BY ITW RAMSET RED HEAD		
MAX. SHUTTER HEIGHT	REQUIRED POS/NEG PRESSURE	MAX. ANCHOR SPACING
99.5"	82.7 PSF	3"
99.5"	41.4 PSF	6"
99.5"	27.8 PSF	9"

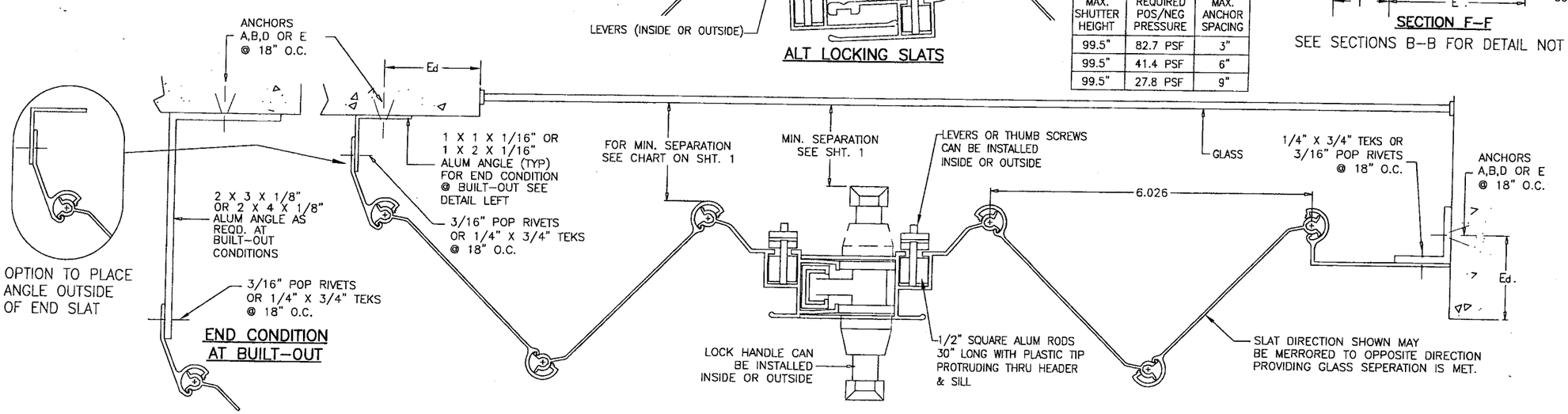

END CONDITION AT BUILT-OUT

SECTION E–E

NO.	REVISION DESCRIPTION	BY	DATE
B3	REVISED LOADS IN SECTION F-F TO COMPLY WITH 2004 FBC	W.W.S.	08/23/05

DRAWN BY: W.W.S. | CHECKED BY: W.W.S.
PLOT: 1=1 | DATE: 10/03/02

DRAWING TITLE: TITAN II FOLDING SHUTTER

MANUFACTURER: FOLDING SHUTTER CORP.
7089 HEMSTREET PLACE
WEST PALM BEACH, FL 33406
561-683-4811

CONSULTANTS: W. W. SCHAEFER ENGINEERING & CONSULTING, P.A.
8895 N. MILITARY TRAIL; SUITE C-204
PALM BEACH GARDENS, FL 33410
PHONE: 561-775-4902 FAX: 561-775-4903

CERTIFICATION
AUG 23 2005
WARREN W. SCHAEFER, P.E.
P.E. NO. 44135

DRAWING NO. 1173 | REV. B
SHEET NO. 3 OF 5

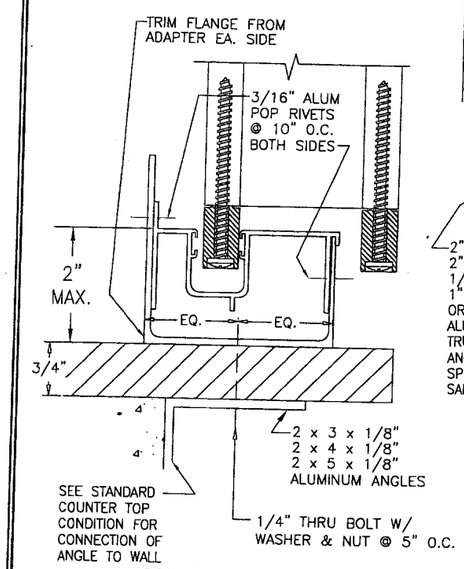

COUNTER TOP CONDITION WITH ALTERNATE BOTTOM TRACK ADAPTER WITHOUT FLANGES

(PASS THRU WINDOW)
MAX SHUTTER HEIGHT = 6 FT.
MAX WIND LOAD = 70 PSF

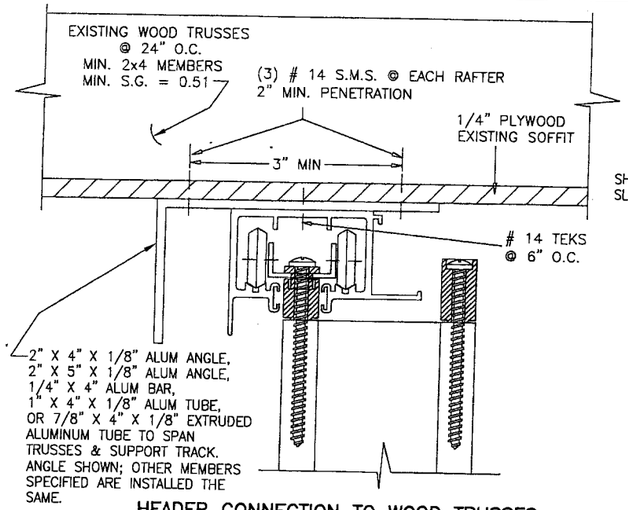

HEADER CONNECTION TO WOOD TRUSSES

FOR SHUTTER HEIGHT OF 108", MAX. DESIGN LOAD = 65 PSF
FOR SHUTTER HEIGHT OF 96", MAX. DESIGN LOAD = 73 PSF

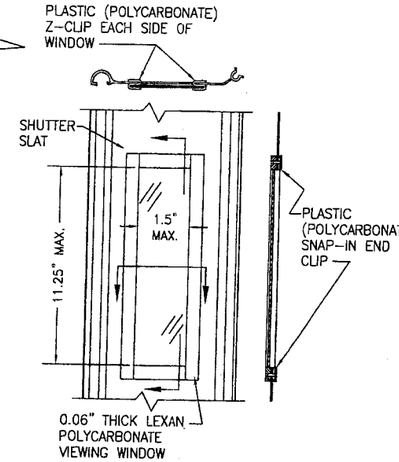

SLAT WINDOW DETAIL (SMALL MISSILE IMPACT)

TO BE USED ONLY WITH SHUTTERS THAT ARE POSITIONED MIN. 30 FT. ABOVE ESTABLISHED GRADE.
2 WINDOWS MAY BE IN ONE SLAT SPACED MIN. 24" APART (MAX. EVERY 10 SLATS)

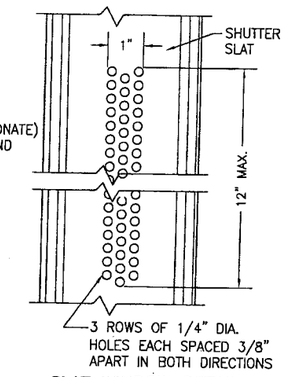

SLAT WINDOW DETAIL (LARGE MISSILE IMPACT)

(APPLICABLE AT ALL ELEVATIONS)
2 WINDOWS MAY BE IN ONE SLAT SPACED MIN. 24" APART (MAX. EVERY 10 SLATS)

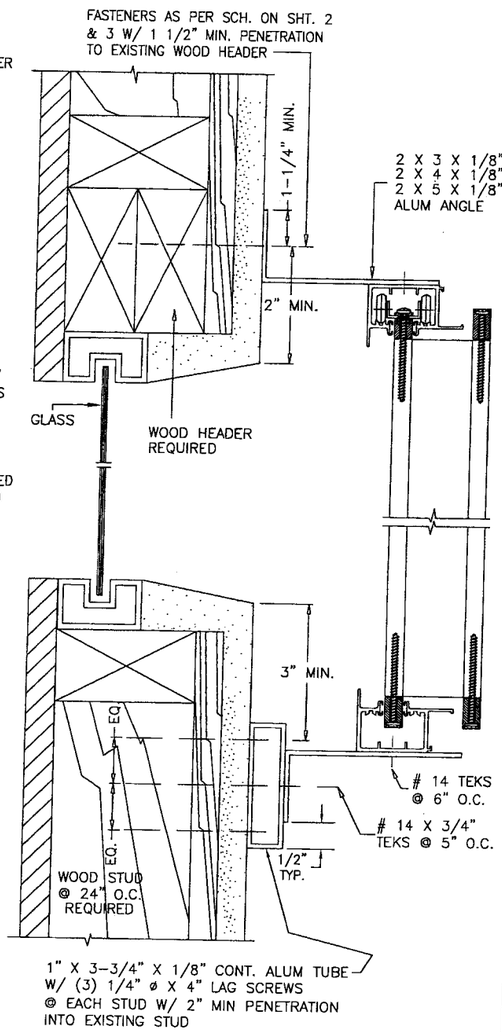

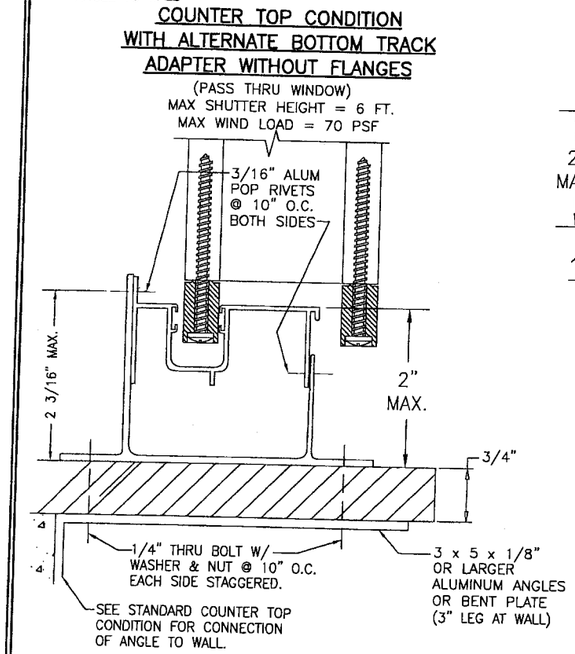

COUNTER TOP CONDITION WITH ALTERNATE BOTTOM TRACK ADAPTER WITH FLANGES

(PASS THRU WINDOW)
MAX SHUTTER HEIGHT = 6 FT.
MAX WIND LOAD = 70 PSF

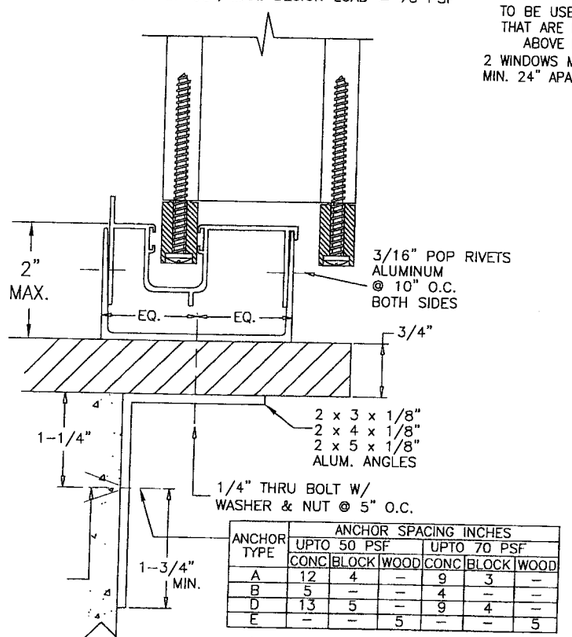

ANCHOR TYPE	ANCHOR SPACING INCHES					
	UPTO 50 PSF			UPTO 70 PSF		
	CONC	BLOCK	WOOD	CONC	BLOCK	WOOD
A	12	4	–	9	3	–
B	5	–	–	4	–	–
D	13	5	–	9	4	–
E	–	–	5	–	–	5

STANDARD COUNTER TOP CONDITION

(PASS THRU WINDOW)
MAX SHUTTER HEIGHT = 6 FT.
MAX WIND LOAD = 70 PSF

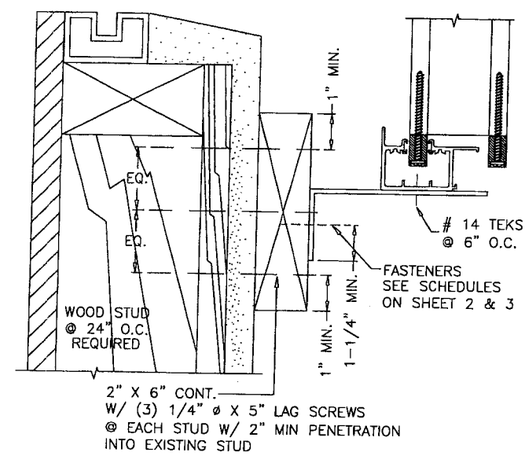

INSTALLATION DETAIL ON EXISTING WOOD BUCKS

SCALE : 1/4"=1"

FOR SHUTTER HEIGHT OF 108" MAX. DESIGN LOAD = 46 PSF
FOR SHUTTER HEIGHT OF 96" MAX. DESIGN LOAD = 51 PSF
FOR HEADER/SILL DETAILS CONNECTED TO CONTINUOUS WOOD MEMBERS SEE SHEETS 2 & 3.

PRODUCT REVISED
as complying with the Florida Building Code
Acceptance No. 05-0908.01
Expiration Date 04/09/2011
By Helmy A. Miller
Miami Dade Product Control Division

DRAWN BY: W.W.S.	CHECKED BY: W.W.S.
PLOT: 1=1	DATE: 10/03/02

NO.	REVISION DESCRIPTION	BY	DATE
A2	CHANGED TRACK DIMENSION IN COUNTER TOP DETAIL TO 2" TRACK	WWS	01/12/04
B3	REVISED ANCHOR SPACINGS HEIGHT AND RIVET SPACING TO 10" TO COMPLY WITH 2004 FBC	W.W.S.	08/23/05

DRAWING TITLE: TITAN II FOLDING SHUTTER

MANUFACTURER: FOLDING SHUTTER CORP.
7089 HEMSTREET PLACE
WEST PALM BEACH, FL 33406
561-683-4811

CONSULTANTS: W. W. SCHAEFER ENGINEERING & CONSULTING, P.A.
8895 N. MILITARY TRAIL, SUITE C-204
PALM BEACH GARDENS, FL 33410
PHONE: 561-775-4902 FAX: 561-775-4903

CERTIFICATION
AUG 23 2005
WARREN W. SCHAEFER, P.E.
P.E. NO. 44135

DRAWING NO. 1173 REV. B

SHEET NO. 4 OF 5

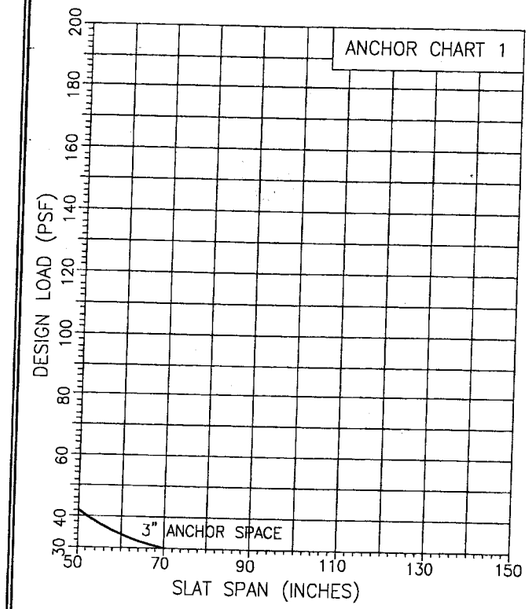

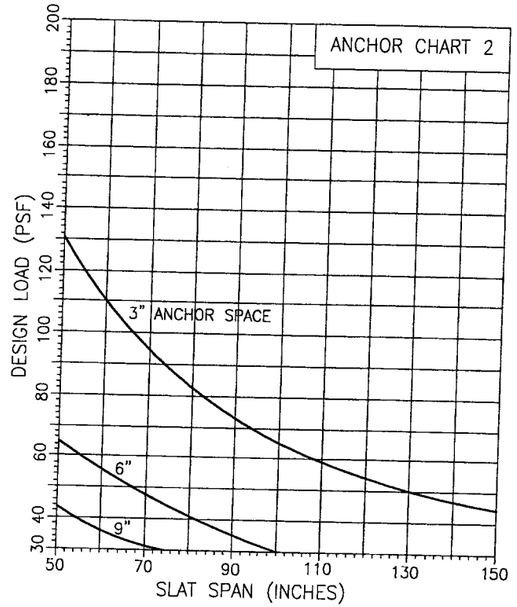

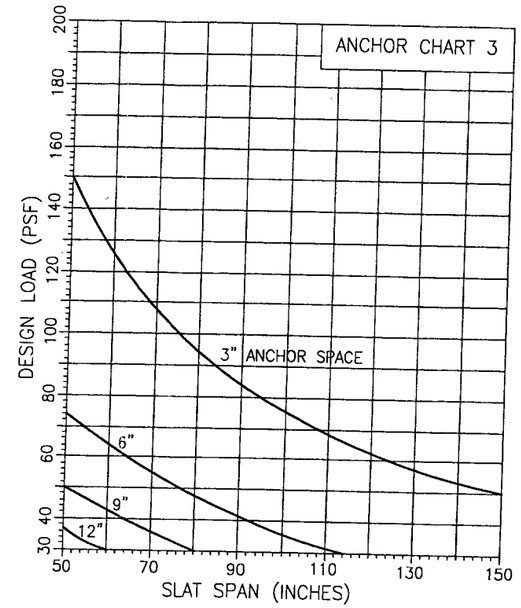

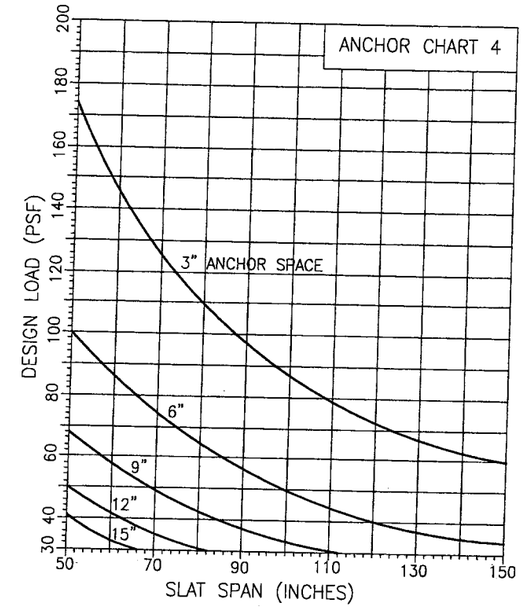

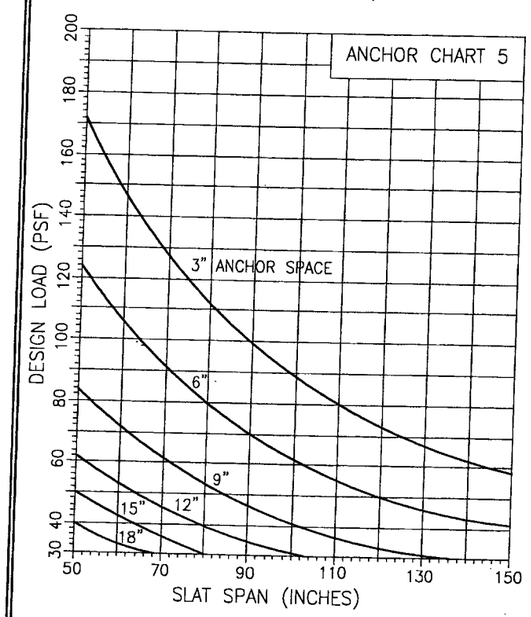

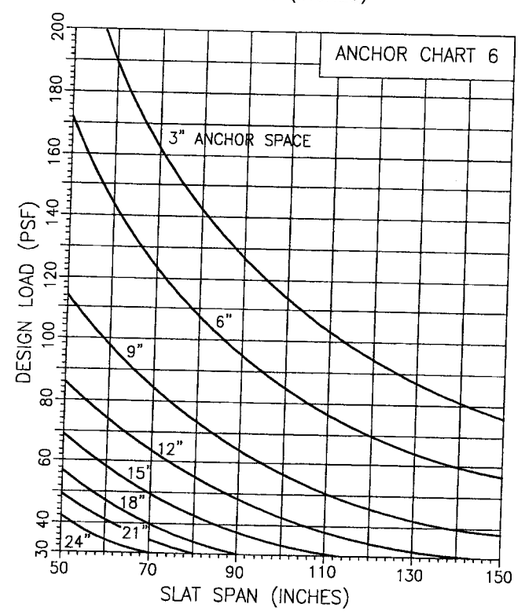

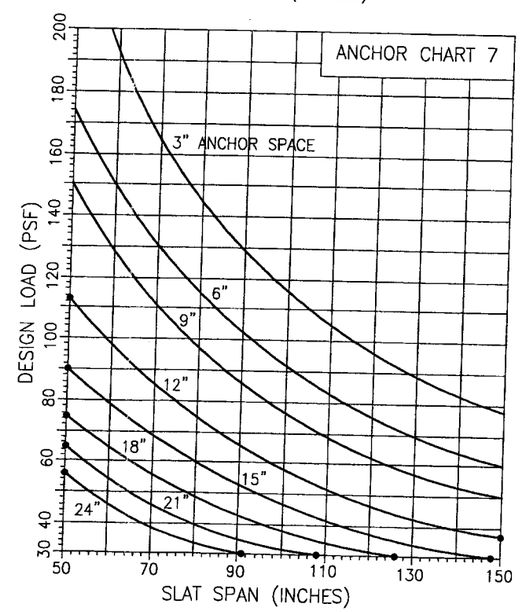

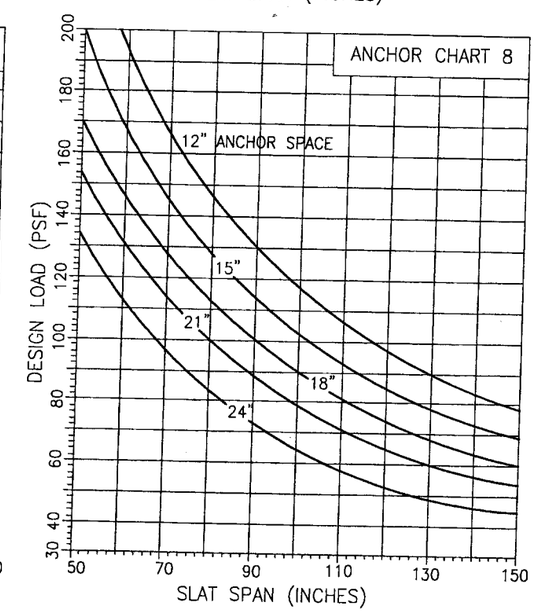

FASTENER SPACING IN MASONRY					
CHARTS ARE BASED ON TYPICAL EDGE DISTANCE = 12d. FOR LESSER EDGE DISTANCE DECREASE SPACING BY MULTIPLYING WITH THE FACTOR BELOW					
EDGE DIST.	12d=3"	10d=2-1/2"	8d=2"	6d=1-1/2"	5d=1-1/4"
FACTOR	1.00	0.86	0.71	0.57	0.50
EXAMPLE: FOR 3" EDGE DIST. SPACING = 12" O.C. (FROM CHART) FOR 2" EDGE DIST. SPACING = 12 X .71 = 8.5 O.C.					

TYPICAL EDGE DISTANCE IN WOOD = 1-1/4"
NO REDUCTION FACTOR IS REQUIRED

TYPICAL ANCHORS

ANCHOR (A) = 1/4" TAPCON (BY ITW RAMSET/RED HEAD):
1-3/4" EMBEDMENT TO 3000 PSI MIN. CONCRETE
1-1/4" EMBEDMENT TO BLOCK

ANCHOR (B) = #14 S.M.S. W/ RAWL SCRU-LEAD INTO MIN. 3000 PSI CONCRETE:
1-1/2" EMBEDMENT.

ANCHOR (D) = 1/4" RAWL CALK-IN:
TOTAL ANCHOR BODY INTO BLOCK OR MIN. 3000 PSI CONCRETE.

ANCHOR (E) = #14 S.M.S./LAG SCREWS INTO WOOD (S.G. = 0.47):
1-1/2" MIN. PENETRATION.

USE CHARTS 1 THRU 8 TO VERIFY ANCHOR REQUIREMENTS AND STRESS LIMITATIONS OF LOAD/SPAN COMBINATIONS FOR HEADER AND SILL.

NOTE: ANCHORS, USE FULL EMBEDMENT IN CONCRETE BEYOND THE COVERING (STUCCO, TILES, ETC.)

PRODUCT REVISED
as complying with the Florida Building Code
Acceptance No. 05-0908.01
Expiration Date 04/09/2011
By Helmy A. Mohr
Miami Dade Product Control Division

DRAWN BY: W.W.S.	CHECKED BY: W.W.S.
PLOT: 1=1	DATE: 10/03/02

NO.	REVISION DESCRIPTION	BY	DATE
B2	REDUCED LOADS IN LOAD TABLES TO COMPLY WITH 2004 FBC	W.W.S.	08/23/05

DRAWING TITLE
TITAN II FOLDING SHUTTER

MANUFACTURER
FOLDING SHUTTER CORP.
7089 HEMSTREET PLACE
WEST PALM BEACH, FL 33406
561-683-4811

CONSULTANTS
W. W. SCHAEFER ENGINEERING & CONSULTING, P.A.
8895 N. MILITARY TRAIL; SUITE C-204
PALM BEACH GARDENS, FL 33410
PHONE: 561-775-4902 FAX: 561-775-4903

CERTIFICATION
AUG 23 2005
WARREN W. SCHAEFER, P.E.
P.E. NO. 44135

DRAWING NO. 1173 REV. B
SHEET NO. 5 OF 5