MIAMI-DADE COUNTY

BUILDING CODE COMPLIANCE OFFICE (BCCO)
PRODUCT CONTROL DIVISION

MIAMI-DADE COUNTY, FLORIDA
METRO-DADE FLAGLER BUILDING
140 WEST FLAGLER STREET, SUITE 1603
MIAMI, FLORIDA 33130-1563
(305) 375-2901 FAX (305) 375-2908
www.buildingcodeonline.com

# NOTICE OF ACCEPTANCE (NOA)

**C.P. Loewen Enterprises**
**77 P.T.H. 52 West Box 2260**
**Stein Bach, Manitoba, Canada ROA 1B2**

**SCOPE:**

This NOA is being issued under the applicable rules and regulations governing the use of construction materials. The documentation submitted has been reviewed by Miami-Dade County Product Control Division and accepted by the Board of Rules and Appeals (BORA) to be used in Miami Dade County and other areas where allowed by the Authority Having Jurisdiction (AHJ).

This NOA shall not be valid after the expiration date stated below. The Miami-Dade County Product Control Division (In Miami Dade County) and/or the AHJ (in areas other than Miami Dade County) reserve the right to have this product or material tested for quality assurance purposes. If this product or material fails to perform in the accepted manner, the manufacturer will incur the expense of such testing and the AHJ may immediately revoke, modify, or suspend the use of such product or material within their jurisdiction. BORA reserves the right to revoke this acceptance, if it is determined by Miami-Dade County Product Control Division that this product or material fails to meet the requirements of the applicable building code.

This product is approved as described herein, and has been designed to comply with the Florida Building Code, including the High Velocity Hurricane Zone.

**DESCRIPTION: Aluminum Clad Wood Impact Picture Windows (Direct Glazed)**

**APPROVAL DOCUMENT:** Drawing No. 1094, titled "Aluminum Clad Wood Impact Picture Windows (Direct Glazed)", sheets 1 through 3, prepared by W.W. Schaefer Engineering & Consulting, P.A., signed and sealed by Warren Schaefer, P.E., dated 01/28/01, with revision **"A1"**, date 08/02/05, bearing the Miami-Dade County Product Control Revision stamp with the Notice of Acceptance number and expiration date by the Miami-Dade County Product Control Division.

**MISSILE IMPACT RATING: Large and Small Missile Impact**

**LABELING:** Each unit shall bear a permanent label with the manufacturer's name or logo, city, state and following statement: "Miami-Dade County Product Control Approved", unless otherwise noted herein.

**RENEWAL** of this NOA shall be considered after a renewal application has been filed and there has been no change in the applicable building code negatively affecting the performance of this product.

**TERMINATION** of this NOA will occur after the expiration date or if there has been a revision or change in the materials, use, and/or manufacture of the product or process. Misuse of this NOA as an endorsement of any product, for sales, advertising or any other purposes shall automatically terminate this NOA. Failure to comply with any section of this NOA shall be cause for termination and removal of NOA.

**ADVERTISEMENT:** The NOA number preceded by the words Miami-Dade County, Florida, and followed by the expiration date may be displayed in advertising literature. If any portion of the NOA is displayed, then it shall be done in its entirety.

**INSPECTION:** A copy of this entire NOA shall be provided to the user by the manufacturer or its distributors and shall be available for inspection at the job site at the request of the Building Official.

This NOA **revises NOA # 02-0308.09** consists of this page 1 and evidence pages E-1 and E-2, as well as approval document mentioned above.

The submitted documentation was reviewed by **Jaime Gascon, P.E.**

PRODUCT CONTROL ACCEPTED

J. Gascon
3/10/06

**C.P. Loewen Enterprises**

## NOTICE OF ACCEPTANCE: EVIDENCE SUBMITTED

**A. DRAWINGS**

1. Manufacturer's die drawings and sections.
2. Drawing No **1094**, titled "Aluminum Clad Wood Impact Picture Windows (Direct Glazed)", sheets 1 through 3, prepared by W.W. Schaefer Engineering & Consulting, P.A., dated 01/28/01, with revision **"A1"**, date 08/02/05, signed and sealed by Warren Schaefer, P.E.

**B. TESTS**

1. Test reports on 1) Air Infiltration Test, per FBC, TAS 202-94
   2) Uniform Static Air Pressure Test, Loading per FBC, TAS 202-94
   3) Water Resistance Test, per FBC, TAS 202-94
   4) Large Missile Impact Test per FBC, TAS 201-94
   5) Cyclic Wind Pressure Loading per FBC, TAS 203-94

   along with marked-up drawings and installation diagram of an aluminum clad wood impact picture window, prepared by Hurricane Test Laboratory, Inc., Test Report No. 0286-1232-01, dated 12/5/01, signed and sealed by Vinu Abraham, P.E.
   ***"Submitted under NOA # 02-0308.09"***
2. Test reports on 1) Air Infiltration Test, per FBC, TAS 202-94
   2) Uniform Static Air Pressure Test, Loading per FBC, TAS 202-94
   3) Water Resistance Test, per FBC, TAS 202-94
   4) Large Missile Impact Test per FBC, TAS 201-94
   5) Cyclic Wind Pressure Loading per FBC, TAS 203-94

   along with marked-up drawings and installation diagram of an operable outswing casement window mulled to picture window, prepared by Hurricane Test Laboratory, Inc., Test Report No. 0286-1222-01, dated 12/6/01, signed and sealed by Vinu Abraham, P.E.
   ***"Submitted under NOA # 02-0308.09"***

**C. CALCULATIONS**

1. **Complies with ASTM E1300-02**
2. Anchor Calculations and structural analysis, prepared by Warren Schaefer, P.E., dated 2/14/02, signed and sealed by Warren Schaefer, P.E.
   ***"Submitted under NOA # 02-0308.09"***

**D. QUALITY ASSURANCE**

1. Miami Dade Building Code Compliance Office (BCCO).

**Jaime Gascon, P.E.**
**Chief, Product Control Division**
**NOA No 05-0909.01**
**Expiration Date: June 20, 2007**
**Approval Date: March 30, 2006**

## NOTICE OF ACCEPTANCE: EVIDENCE SUBMITTED

**E. MATERIAL CERTIFICATIONS**

1. Notice of Acceptance No. **03-0417.01** issued to Cardinal LG for "Cardinal Sea-Storm Type B" dated 05/15/03, expiring on 12/30/07.

**F. STATEMENTS**

1. Statement letter of no financial interest, dated 2/14/02, signed and sealed by Warren Schaefer, P.E.
   ***"Submitted under NOA # 02-0308.09"***

**G. OTHER**

1. Notice of Acceptance No. **02-1016.06**, issued to **La Finestra** for their "Series "EKU-53" Outswing Aluminum Casement Window – Impact", approved on 02/27/03 and expiring on 02/27/08.

**Jaime Gascon, P.E.**
**Chief, Product Control Division**
**NOA No 05-0909.01**
**Expiration Date: June 20, 2007**
**Approval Date: March 30, 2006**

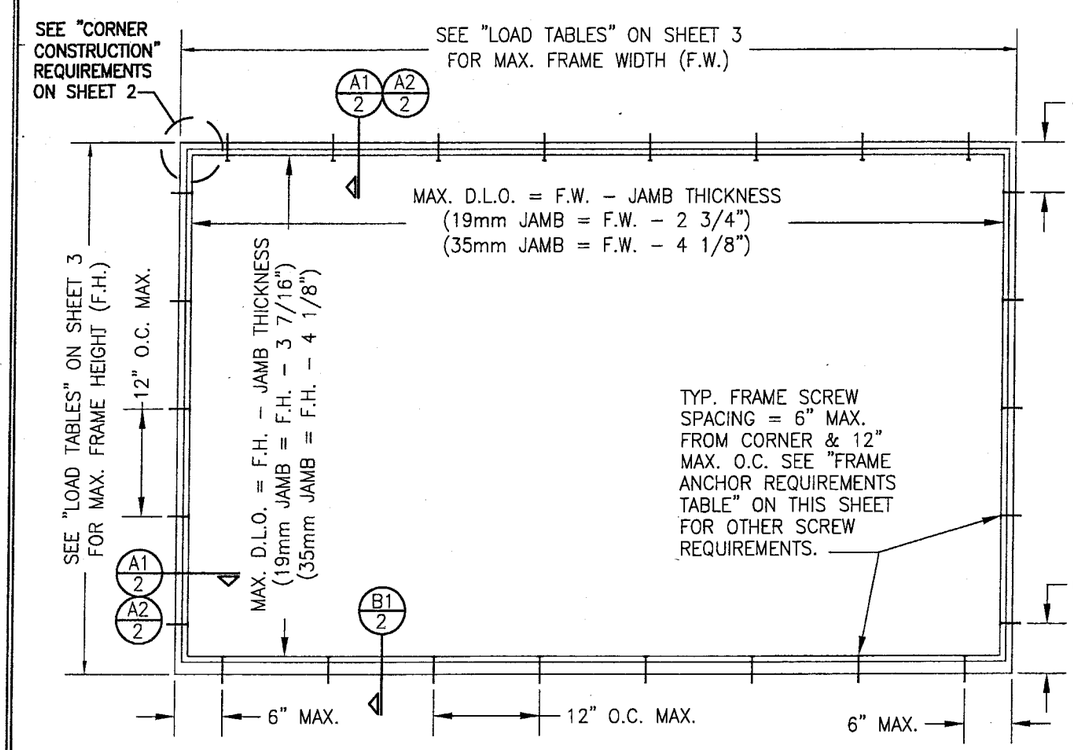


EXTERIOR ELEVATION; RECTANGULAR WINDOW
(SHEAR SCREW MOUNT)
SCALE: 3/4"=1'-0"

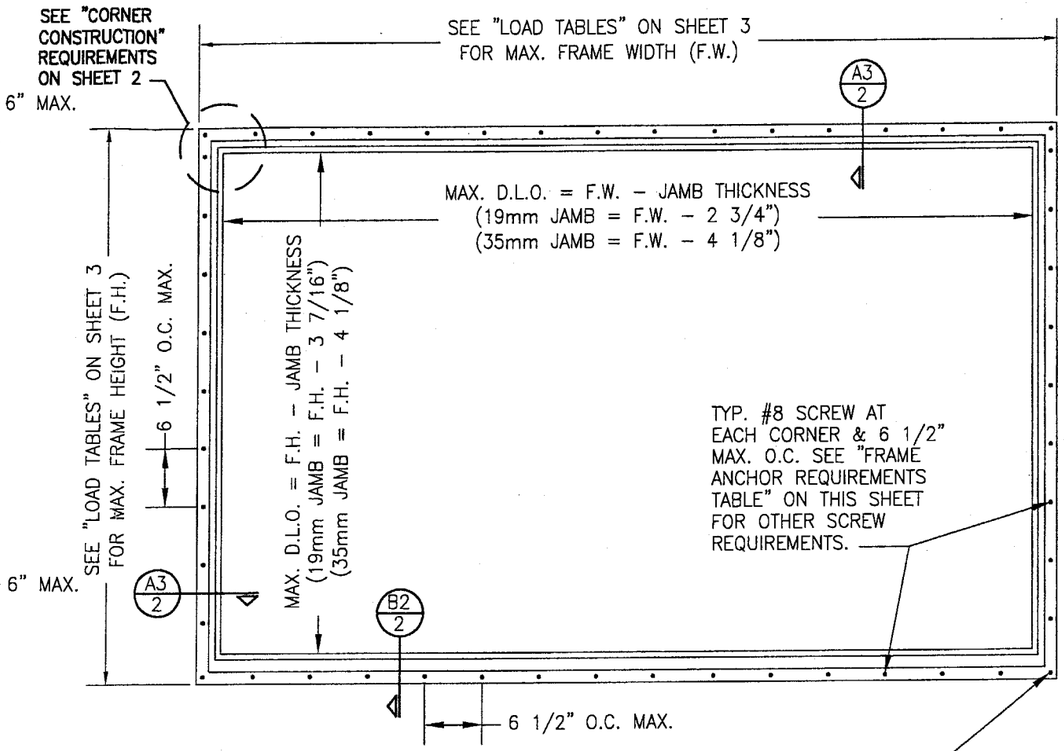


EXTERIOR ELEVATION; RECTANGULAR WINDOW
(OPTIONAL NAIL FIN MOUNT)
SCALE: 3/4"=1'-0"

START ALL FIN SCREWS DIRECTLY AT CORNERS

FOR ALLOWABLE DESIGN WIND PRESSURE ON WINDOWS, SEE LOAD TABLES ON SHEET 3.

## FRAME ANCHOR REQUIREMENTS TABLE

| OPENING TYPE (SUBSTRATE) | JAMB TO OPENING FASTENER TYPE | MINIMUM EMBEDMENT | MINIMUM EDGE DIST. |
|---|---|---|---|
| * SHEAR SCREWS | | | |
| 2X_ WOOD FRAME OR BUCK | NO. 10 SMS SCREW | 1 3/8" | 3/4" |
| CMU/CONCRETE | (1)3/16" CONCRETE SCREWS | 1 1/4" | 1 7/8" |
| FIN SCREWS | | | |
| 2X_ WOOD FRAME OR BUCK | NO. 8 SMS SCREW | 1 3/8" | 1/2" |

(1)CONCRETE SCREWS SHALL BE ITW RAMSET/RED HEAD TAPCONS, HILTI KWIK-CON II OR POWERS RAWL TAPPER. (HARDENED STEEL OR S.S.)

*ANCHOR NOTE: FRAME MAY BE EITHER DIRECT MOUNTED TO THE OPENING, MOUNTED ONTO A CONTINUOUS SPACER, OR ANCHORED TO A MIN. 2X4 NO. 2 SOUTHERN PINE WOOD BUCK. WHEN ANCHORED THROUGH JAMB TO A 2X4 BUCK, NO. 10 SCREWS SHALL BE USED. WHEN ANCHORED WITH NAIL FIN INTO 2X4 BUCK, NO. 8 SCREWS SHALL BE USED. WHEN DIRECT MOUNTED OR MOUNTED WITH SPACER, 3/16" CONCRETE SCREWS SHALL BE USED. SEE "ANCHOR REQUIREMENTS TABLE" FOR EMBED REQUIREMENTS. PROPER MATERIAL SHALL BE USED BETWEEN ALL DISIMILAR MATERIALS (BLOCK/CONCRETE & ALUMINUM).

## GENERAL NOTES

1. THESE WINDOW SYSTEMS HAVE BEEN TESTED, ANALYZED AND APPROVED FOR DESIGN PRESSURES NOT TO EXCEED THOSE SHOWN IN THE "ALLOWABLE DESIGN LOADS" TABLE.
2. BUCKING, OPENINGS & BUCKING FASTENERS MUST BE PROPERLY DESIGNED & INSTALLED TO TRANSFER WIND LOADS TO THE STRUCTURE.
3. ALL HARDWARE & FASTENERS SHALL BE IN ACCORDANCE WITH THESE DRAWINGS & MAY NOT VARY UNLESS SPECIFICALLY MENTIONED ON THE DRAWINGS.
4. THE DETAILS & SPECIFICATIONS SHOWN HEREIN REPRESENT THE PRODUCTS TESTED & PROPOSED FOR WATER, AIR, IMPACT, CYCLIC & UNIFORM STATIC AIR PRESSURE TESTING IN CONFORMANCE WITH DADE COUNTY PROTOCOLS TAS 201, 202 & 203 FOR LARGE MISSILE IMPACT WINDOWS.
5. THESE WINDOW SYSTEMS HAVE BEEN DESIGNED IN ACCORDANCE WITH THE 2004 FLORIDA BUILDING CODE (FBC) INCLUDING HIGH VELOCITY HURRICANE ZONES (HVHZ).
6. IMPACT SHUTTERS ARE NOT REQUIRED WITH THESE WINDOWS.
7. ALL ANCHORS SHALL BE INSTALLED AS SPECIFIED ON THESE DRAWINGS. SPECIFIED EMBEDMENT TO BASE MATERIAL SHALL BE BEYOND WALL FINISH OR STUCCO.
8. MATERIALS, INCLUDING BUT NOT LIMITED TO STEEL SCREWS, THAT COME INTO CONTACT WITH OTHER DISSIMILAR MATERIALS SHALL MEET THE REQUIREMENTS OF 2004 FLORIDA BUILDING CODE SECTION 2003.8.4.

PRODUCT REVISED
as complying with the Florida
Building Code
Acceptance No. 05-0909.01
Expiration Date 06/20/07
By
Miami-Dade Product Control
Division

| DRAWN BY: J.C.F. | CHECKED BY: W.W.S. |
|---|---|
| PLOT: 1=16 | DATE: 01/28/01 |

| NO. | REVISION DESCRIPTION | BY | DATE |
|---|---|---|---|
| A1 | UPDATE TO 2004 CODE COMPLIANCE | WWS | 08/02/05 |

DRAWING TITLE
ALUMINUM CLAD WOOD IMPACT PICTURE WINDOWS (DIRECT GLAZED)

MANUFACTURER
C.P. LOEWEN ENTERPRISES
77 P.T.H 52 WEST, BOX 2260
STEINBACH, MB CANADA R0A 2A0
204-326-6446

CONSULTANTS
W. W. SCHAEFER ENGINEERING & CONSULTING, P.A.
600 SANDTREE DRIVE; SUITE 203B
PALM BEACH GARDENS, FL 33403
PHONE: 561-775-4902 FAX: 561-775-4903

CERTIFICATION
JAN 18 2006
WARREN W. SCHAEFER, P.E.
P.E. NO. 44135

DRAWING NO. 1094
REV. A
SHEET NO. 1 OF 3

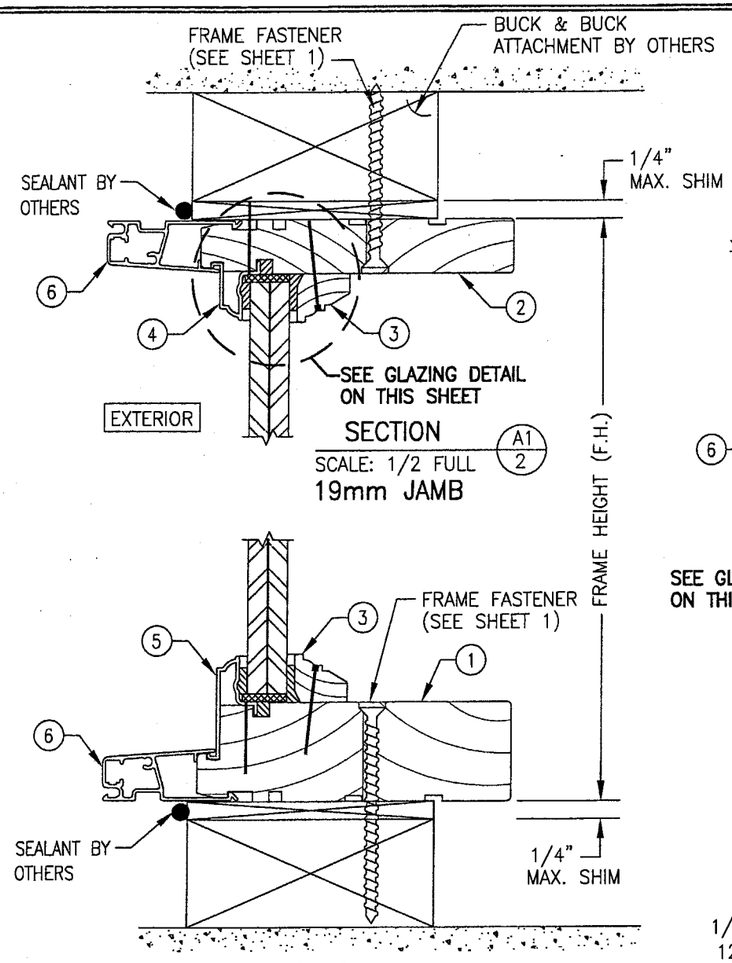


SECTION A1/2
SCALE: 1/2 FULL
19mm JAMB

SECTION B1/2
SCALE: 1/2 FULL

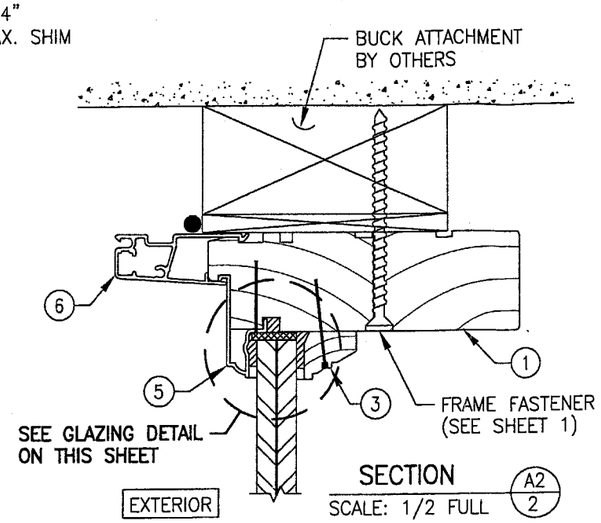


SECTION A2/2
SCALE: 1/2 FULL
35mm JAMB

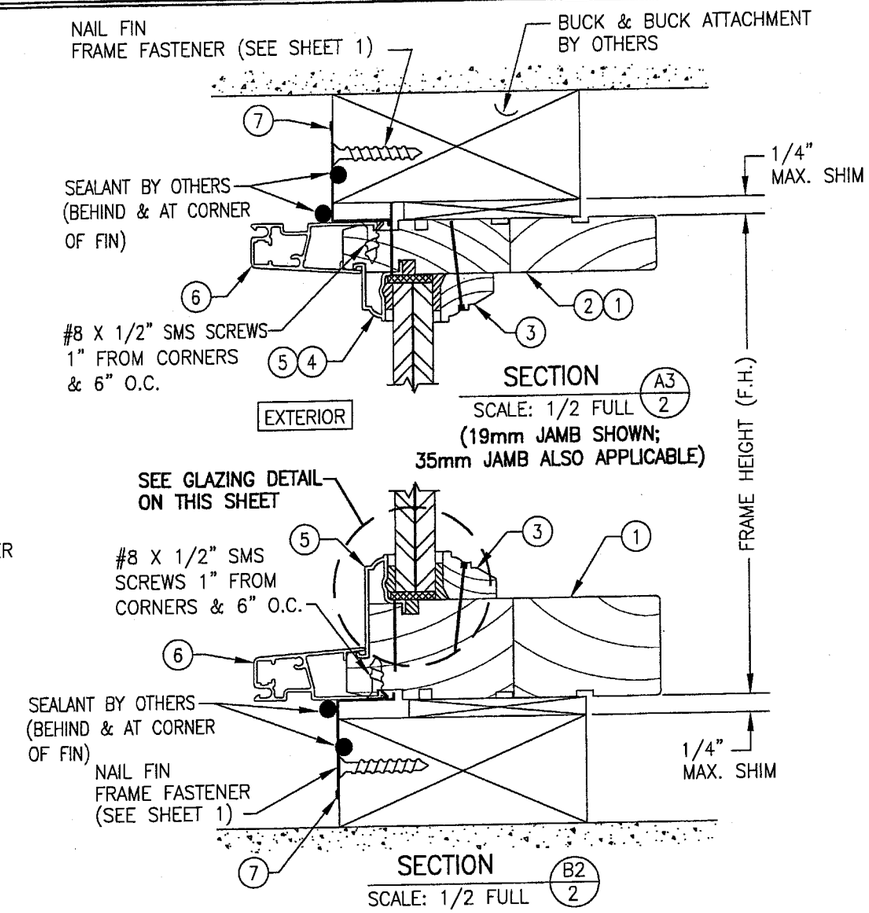


SECTION A3/2
SCALE: 1/2 FULL
(19mm JAMB SHOWN; 35mm JAMB ALSO APPLICABLE)

SECTION B2/2
SCALE: 1/2 FULL

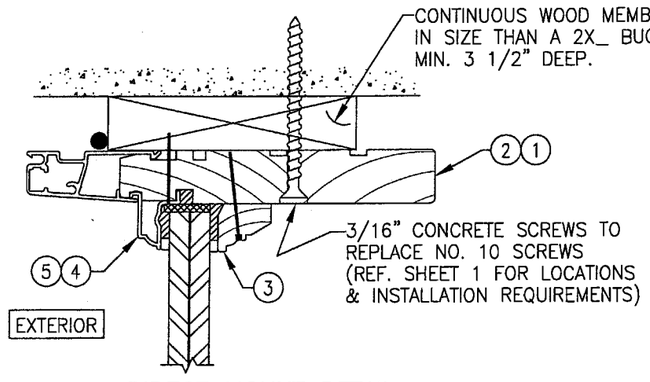


DIRECT MOUNT DETAIL

**THIN JAMB DETAIL SHOWN; THICK JAMB SIMILAR**

SEE SECTIONS FOR DETAIL NOT SHOWN

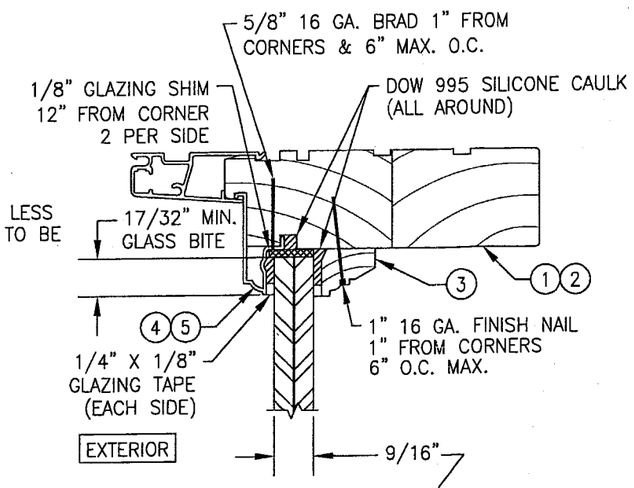


GLAZING DETAIL

DUPONT SGP LAMINATED GLASS

OPTION 1) 9/16" THICK OVERALL (1/4" HEAT STRENGTHENED/ 0.090 SGP/1/4" HEAT STRENGTHENED)

OPTION 2) 9/16" THICK OVERALL (1/4" ANNEALED/ 0.090 SGP/1/4" ANNEALED)

**PRODUCT REVISED**
**as complying with the Florida Building Code**
**Acceptance No.** 05-0909.01
**Expiration Date:** 06/20/07
**By** [signature]
**Miami Dade Product Control Division**

## CORNER CONSTRUCTION:

JAMB: WOOD MEMBERS ARE COPED, SEALED, BUTTED TOGETHER AND MECHANICALLY FASTENED USING THREE (3) 1 3/4" 16 GA. STAPLES VERTICALLY AND TWO (2) 1 3/4" 16 GA. STAPLES HORIZONTALLY. SCHNEE-MOREHEAD SM7100 CAULK IS APPLIED TO THE SEAM PRIOR TO JOINING THE WOOD MEMBERS. THE CLAD IS MITERED, GASKETED WITH A CLOSED CELL FOAM 1/16" THICK THEN BUTTED TOGETHER AND MECHANICALLY FASTENED USING ONE (1) #6 X 1 1/2" S.M.S. SCREW PER CORNER. TREMFLEX 834 IS THEN APPLIED TO THE CLAD SEAM.

| DRAWN BY: J.C.F. | CHECKED BY: W.W.S. |
|---|---|
| PLOT: 1=2 | DATE: 01/28/01 |

| NO. | REVISION DESCRIPTION | BY | DATE |
|---|---|---|---|
| | | | |

DRAWING TITLE
ALUMINUM CLAD WOOD IMPACT PICTURE WINDOWS (DIRECT GLAZED)

MANUFACTURER
C.P. LOEWEN ENTERPRISES
77 P.T.H 52 WEST, BOX 2260
STEINBACH, MB CANADA R0A 2A0
204-326-6446

CONSULTANTS
W. W. SCHAEFER ENGINEERING & CONSULTING, P.A.
600 SANDTREE DRIVE; SUITE 203B
PALM BEACH GARDENS, FL 33403
PHONE: 561-775-4902 FAX: 561-775-4903

CERTIFICATION
JAN 18 2006
WARREN W. SCHAEFER, P.E.
P.E. NO. 44135

DRAWING NO. 1094
REV. A
SHEET NO. 2 OF 3

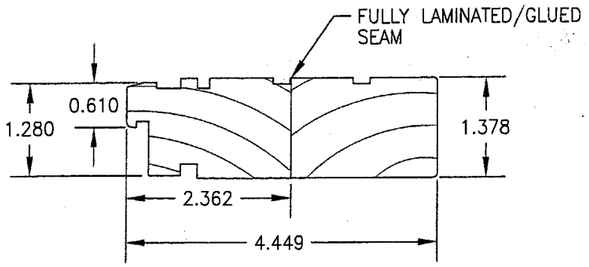


(1) 35mm JAMB/STD. SILL

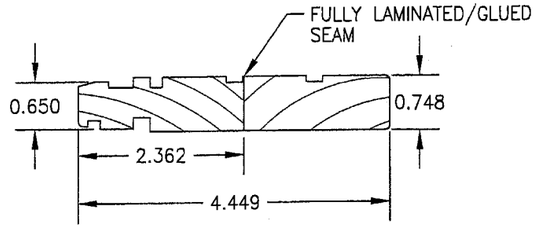


(2) 19mm HEAD/SIDE JAMB

| ITEM # | PART | ITEM DESCRIPTION | MANUFACTURER/NOTES |
|---|---|---|---|
| | | PARTS | |
| 1 | 3800/3818/3820 | 35mm JAMB/STANDARD SILL | DOUGLAS FIR |
| 2 | 3804/3802 | 19mm HEAD/SIDE JAMB | DOUGLAS FIR |
| 3 | 3816 | INTERIOR GLAZING STOP | DOUGLAS FIR |
| 4 | 3874/3872 | EXTERIOR GLAZING STOP (19mm JAMB) | 6060–T5 ALUMINUM |
| 5 | 3876/3878/3870 | EXTERIOR GLAZING STOP (35mm JAMB) | 6060–T5 ALUMINUM |
| 6 | 4390 | FRAME CLADDING | 6060–T5 ALUMINUM |
| 7 | 4940 | APPLIED NAILING FIN | STEEL (Fy = 50 ksi MIN.) |

* WOOD USED WITH TEST UNITS WAS GRADE 2 NORTHERN DOUGLAS FIR. ALTERNATE WOOD SPECIES TO BE APPLICABLE WITH THESE WINDOWS IS MIN. GRADE 2 MAHOGANY, OAK, CHERRY, MAPLE & CYPRUS.

NOTE: ALL WOOD IS RECEIVED BY LOEWEN WINDOWS AS GRADE 2, BUT IS MACHINED BY LOEWEN TO A SELECT GRADE USE.

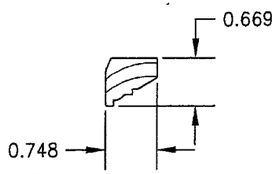


(3) INT GLAZING STOP

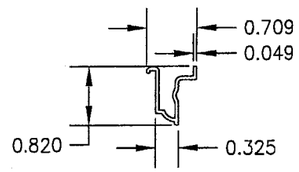


(4) 19mm EXT. GLAZING STOP

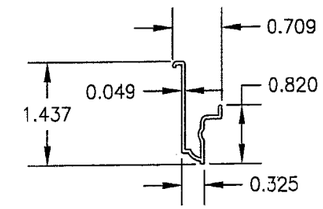


(5) 35mm EXT. GLAZING STOP

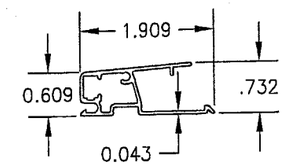


(6) FRAME CLADDING

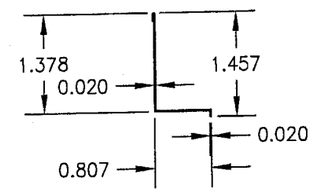


(7) NAILING FIN

PRODUCT REVISED
as complying with the Florida
Building Code
Acceptance No. 05-0909.01
Expiration Date 06/20/07
By
Miami Dade Product Control
Division

ALLOWABLE DESIGN PRESSURE
(WITH CARDINAL 9/16" HEAT STRENGTHENED LAMINATED GLASS)

| (1) SHORT DIMENSION | DESIGN LOAD CAPACITY (POSITIVE & NEGATIVE PSF) | | | | | | | | | | |
|---|---|---|---|---|---|---|---|---|---|---|---|
| 36" | 70.0 | 70.0 | 70.0 | 70.0 | 70.0 | 70.0 | 70.0 | 70.0 | 70.0 | 70.0 | 70.0 |
| 42" | 70.0 | 70.0 | 70.0 | 70.0 | 70.0 | 70.0 | 70.0 | 70.0 | 70.0 | 70.0 | |
| 48" | 70.0 | 70.0 | 70.0 | 70.0 | 70.0 | 70.0 | 70.0 | 70.0 | | | |
| 54" | 70.0 | 70.0 | 70.0 | 70.0 | 70.0 | 70.0 | 70.0 | | | | |
| 59" | 70.0 | 70.0 | 70.0 | 70.0 | 70.0 | 70.0 | 70.0 | | | | |
| 66" | | 62.6 | 62.6 | 62.6 | 62.6 | | | | | | |
| 72" | | | 57.4 | 57.4 | | | | | | | |
| (1) LONG DIMENSION | 60" | 66" | 72" | 78" | 84" | 90" | 95" | 108" | 120" | 132" | 144" |

ALLOWABLE DESIGN PRESSURE
(WITH CARDINAL 9/16" ANNEALED LAMINATED GLASS)

| (1) SHORT DIMENSION | DESIGN LOAD CAPACITY (POSITIVE & NEGATIVE PSF) | | | | | | | | | | |
|---|---|---|---|---|---|---|---|---|---|---|---|
| 36" | 70.0 | 70.0 | 70.0 | 70.0 | 70.0 | 70.0 | 70.0 | 70.0 | 70.0 | 70.0 | 70.0 |
| 42" | 70.0 | 70.0 | 70.0 | 70.0 | 70.0 | 70.0 | 70.0 | 70.0 | 70.0 | 69.4 | |
| 48" | 70.0 | 70.0 | 70.0 | 70.0 | 70.0 | 69.4 | 66.7 | 59.9 | | | |
| 54" | 70.0 | 70.0 | 70.0 | 67.2 | 61.8 | 58.4 | 55.5 | | | | |
| 59" | 70.0 | 70.0 | 66.8 | 60.5 | 56.4 | 52.9 | 49.9 | | | | |
| 66" | | 61.2 | 59.0 | 55.0 | 50.4 | | | | | | |
| 72" | | | 54.1 | 49.7 | | | | | | | |
| (1) LONG DIMENSION | 60" | 66" | 72" | 78" | 84" | 90" | 95" | 108" | 120" | 132" | 144" |

TABLE NOTES:
(1) ALL WINDOW DIMENSION VALUES SHOWN ARE +/–1/2" & ARE FRAME (F.H. & F.W.) DIMENSIONS
(2) THOSE SIZES WITH LOADS LISTED ARE MAXIMUM ALLOWABLE SIZES AT THAT LOAD. IF NO LOAD IS LISTED FOR A GIVEN SIZE, THAT SIZE EXCEEDS ALLOWABLE AND IS NOT ACCEPTABLE.

DRAWN BY: W.W.S. | CHECKED BY: W.W.S.
PLOT: 1=2 | DATE: 01/29/02

| NO. | REVISION DESCRIPTION | BY | DATE |
|---|---|---|---|

DRAWING TITLE
ALUMINUM CLAD WOOD IMPACT PICTURE WINDOWS (DIRECT GLAZED)

MANUFACTURER
C.P. LOEWEN ENTERPRISES
77 P.T.H 52 WEST, BOX 2260
STEINBACH, MB CANADA R0A 2A0
204–326–6446

CONSULTANTS
W. W. SCHAEFER ENGINEERING & CONSULTING, P.A.
600 SANDTREE DRIVE; SUITE 203B
PALM BEACH GARDENS, FL 33403
PHONE: 561–775–4902 FAX: 561–775–4903

CERTIFICATION
JAN 18 2006
WARREN W. SCHAEFER, P.E.
P.E. NO. 44135

DRAWING NO. 1094 | REV. A
SHEET NO. 3 OF 3