MIAMI-DADE COUNTY
BUILDING CODE COMPLIANCE OFFICE (BCCO)
PRODUCT CONTROL DIVISION

MIAMI-DADE COUNTY, FLORIDA
METRO-DADE FLAGLER BUILDING

140 WEST FLAGLER STREET, SUITE 1603
MIAMI, FLORIDA 33130-1563
(305) 375-2901 FAX (305) 375-2908
www.buildingcodeonline.com

NOTICE OF ACCEPTANCE (NOA)

Alumistand & Vibra-Damp Corp. of America
3350 Burris Road
Fort Lauderdale, Florida 33314

SCOPE:
This NOA is being issued under the applicable rules and regulations governing the use of construction materials. The documentation submitted has been reviewed by Miami-Dade County Product Control Division and accepted by the Board of Rules and Appeals (BORA) to be used in Miami Dade County and other areas where allowed by the Authority Having Jurisdiction (AHJ).

This NOA shall not be valid after the expiration date stated below. The Miami-Dade County Product Control Division (In Miami Dade County) and/or the AHJ (in areas other than Miami Dade County) reserve the right to have this product or material tested for quality assurance purposes. If this product or material fails to perform in the accepted manner, the manufacturer will incur the expense of such testing and the AHJ may immediately revoke, modify, or suspend the use of such product or material within their jurisdiction. BORA reserves the right to revoke this acceptance, if it is determined by Miami-Dade County Product Control Division that this product or material fails to meet the requirements of the applicable building code.

This product is approved as described herein, and has been designed to comply with the High Velocity Hurricane Zone of the Florida Building Code.

DESCRIPTION: Aluminum Roof Mounted Stand Frame Support for Air Conditioning Units

APPROVAL DOCUMENT: Drawing No. 05-378, titled " Air Conditioning Stand ", sheets 1 through 3 of 3, prepared by Thornton-Tomasetti Group, dated September 21, 2005, last revision #0 dated September 21, 2005, signed and sealed by John W. Knezevich, P.E., bearing the Miami-Dade County Product Control Revision stamp with the Notice of Acceptance number and expiration date by the Miami-Dade County Product Control Division.

MISSILE IMPACT RATING: None

LABELING: Each stand frame shall bear a permanent label with the manufacturer's name or logo, city, state and the following statement: "Miami-Dade County Product Control Approved", unless otherwise noted herein.

RENEWAL of this NOA shall be considered after a renewal application has been filed and there has been no change in the applicable building code negatively affecting the performance of this product.

TERMINATION of this NOA will occur after the expiration date or if there has been a revision or change in the materials, use, and/or manufacture of the product or process. Misuse of this NOA as an endorsement of any product, for sales, advertising or any other purposes shall automatically terminate this NOA. Failure to comply with any section of this NOA shall be cause for termination and removal of NOA.

ADVERTISEMENT: The NOA number preceded by the words Miami-Dade County, Florida, and followed by the expiration date may be displayed in advertising literature. If any portion of the NOA is displayed, then it shall be done in its entirety.

INSPECTION: A copy of this entire NOA shall be provided to the user by the manufacturer or its distributors and shall be available for inspection at the job site at the request of the Building Official.

This NOA **revises NOA # 02-0719.03** and consists of this page 1, evidence submitted pages E-1, E-2, & E-3 as well as approval document mentioned above.

The submitted documentation was reviewed by **Helmy A. Makar, P.E.**

PRODUCT CONTROL ACCEPTED

Helmy A. Makar
02/23/2006

NOA No 05-0926.01
Expiration Date: 09/05/2007
Approval Date: 02/23/2006

Alumistand & Vibra-Damp Corp. of America

NOTICE OF ACCEPTANCE: EVIDENCE SUBMITTED

1. EVIDENCE SUBMITTED UNDER PREVIOUS APPROVAL #96-0620.04

A. DRAWINGS

Title:	Air Conditioning Stand
Number:	96-122, sheets 1 through 3.
Signature:	V. J. Knezevich, P.E.
Date:	06/11/96
Revision Date:	08/05/96 and 08/13/96

B. CALCULATIONS

Title:	AVCOA A/C Stand Calculations.
Signature:	V. J. Knezevich, P.E.
Date:	06/11/96

2. EVIDENCE SUBMITTED UNDER PREVIOUS APPROVAL #99-0623.02

A. DRAWINGS

1. None.

B. TESTS

1. None.

C. CALCULATIONS

1. None.

D. MATERIAL CERTIFICATIONS

1. None.

E. OTHERS

1. Letter from AVCOA, signed by Mr. Steven Glinson, dated June 7, 1999, stating that there have been no changes to his N.O.A. 96-0620.04 and he is submitting an application to renew that N.O.A.

3. EVIDENCE SUBMITTED UNDER PREVIOUS APPROVAL #01-0912.07

A. DRAWINGS

1. Drawing No. 00-339, titled "Air Conditioning Stand", sheets 1 through 3 of 3, prepared by Knezevich & Associates, Inc., signed and sealed by V. J. Knezevich, P.E., dated January 16, 2002, last revision #1 dated January 16, 2002.

B. TESTS

1. None.

Helmy A. Makar, P. E.
Product Control Examiner
NOA No 05-0926.01
Expiration Date: 09/05/2007
Approval Date: 02/23/2006

C. CALCULATIONS

1. *Calculation titled "Air Conditioning Stands", dated September 07, 2001, sheets 1 through 8, signed and sealed by V. J. Knezevich, P.E. on September 07, 2001.*

D. MATERIAL CERTIFICATIONS

1. *None.*

4. EVIDENCE SUBMITTED UNDER PREVIOUS APPROVAL #02-0401.01

A. DRAWINGS

1. *Drawing No. 00-339, titled " Air Conditioning Stand ", sheets 1 through 3 of 3, prepared by Knezevich & Associates, Inc., dated September 07, 2001, last revision #2 dated May 20, 2002, signed and sealed by V.J. Knezevich, P.E.*

B. TESTS

1. *None.*

C. CALCULATIONS

1. *Calculation titled "Air Conditioning Stands", dated May 20, 2002, sheets 1 through 5, signed and sealed by V. J. Knezevich, P.E. on May 20, 2002.*

D. MATERIAL CERTIFICATIONS

1. *None.*

5. EVIDENCE SUBMITTED UNDER PREVIOUS APPROVAL # 02-0719.03

A. DRAWINGS

1. *None.*

B. TESTS

1. *None.*

C. CALCULATIONS

1. *None.*

D. MATERIAL CERTIFICATIONS

1. *None.*

Helmy A. Makar

Helmy A. Makar, P. E.
Product Control Examiner
NOA No 05-0926.01
Expiration Date: 09/05/2007
Approval Date: 02/23/2006

NOTICE OF ACCEPTANCE: EVIDENCE SUBMITTED

6. NEW EVIDENCE SUBMITTED

A. DRAWINGS

1. *Drawing No. 05-378, titled " Air Conditioning Stand ", sheets 1 through 3 of 3, prepared by Thornton-Tomasetti Group, dated September 21, 2005, last revision #0 dated September 21, 2005, signed and sealed by John W. Knezevich, P.E.*

B. TESTS

1. *None.*

C. CALCULATIONS

1. *Calculation titled "Aluminum Roof-top Air Condenser Stands", dated July 18, 2005, sheets 1 through 106 of 106, signed and sealed by J. W. Knezevich, P.E.*

D. QUALITY ASSURANCE

1. *By Miami-Dade County Building Code Compliance Office.*

E. MATERIAL CERTIFICATIONS

1. *None.*

Helmy A. Makar

Helmy A. Makar, P. E.
Product Control Examiner
NOA No 05-0926.01
Expiration Date: 09/05/2007
Approval Date: 02/23/2006

Print Information: P:\FL1\Projects\KK5378.00\Drawings\R0-prg\05-378-01.dwg ZLiang 09/21/2005 05:13:33pm 07/21/05 15:40

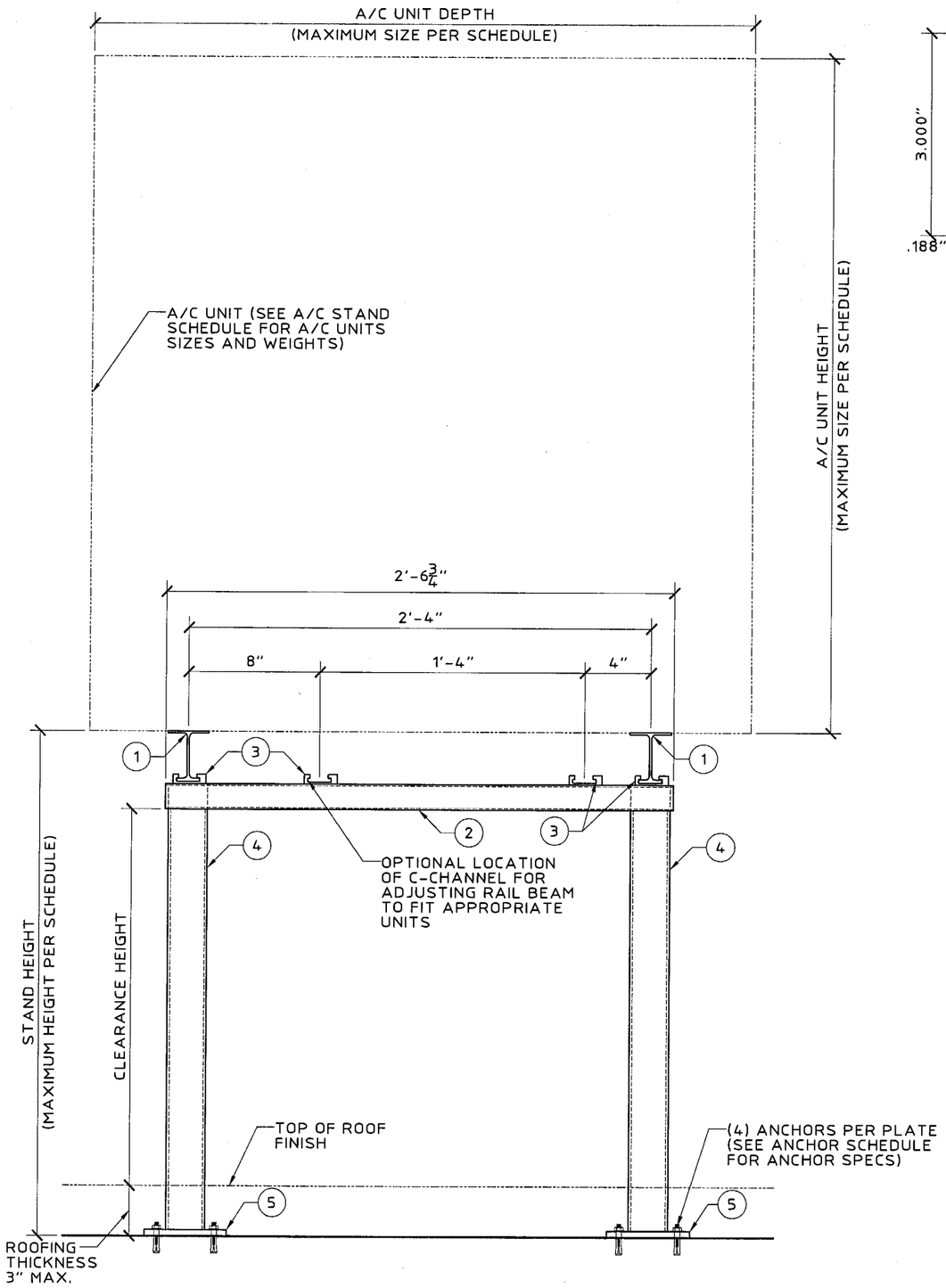

(A) ASSEMBLY ELEVATION (END VIEW)
SCALE: 1-1/2" = 1'-0"

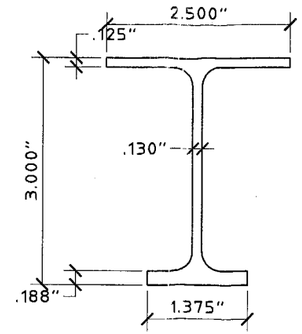

(6061-T6 ALUM. ALLOY)

(1) RAIL (I-BEAM)
SCALE: HALF SIZE

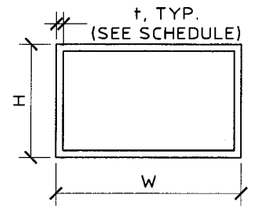

(6061-T6 ALUM. ALLOY)

(2) RECTANGULAR TUBING
SCALE: HALF SIZE

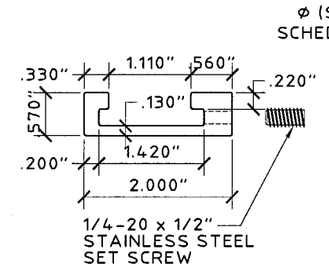

(6065-T5 ALUM. ALLOY)

(3) C-CHANNEL
SCALE: HALF SIZE

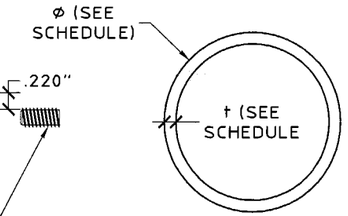

(6061-T6 ALUM. ALLOY)

(4) ROUND TUBING
SCALE: HALF SIZE

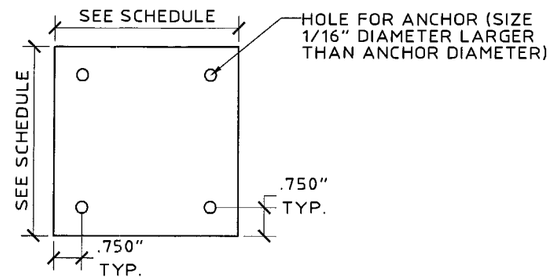

(t = SEE SCHEDULE)
(6061-T6 ALUM. ALLOY)

(5) BASE PLATE
SCALE: 3" = 1'-0"

GENERAL NOTES:

1. THESE A/C STANDS ARE DESIGNED IN ACCORDANCE WITH HIGH VELOCITY HURRICANE ZONE PROVISIONS OF THE FLORIDA BUILDING CODE 2004.
2. A 33% INCREASE IN ALLOWABLE STRESS HAS NOT BEEN USED IN THE DESIGN OF THIS PRODUCT. HOWEVER, FOR WOOD ANCHORS, A LOAD DURATION FACTOR OF 1.6 HAS BEEN USED.
3. WIND LOADS SHALL BE DETERMINED BY AN ARCHITECT OR PROFESSIONAL ENGINEER IN ACCORDANCE WITH THE GOVERNING CODE AND GOVERNING WIND VELOCITY. FOR WIND LOAD CALCULATIONS USING ASCE7-98, USE TABLE 6-10 WITH A DIRECTIONALITY FACTOR OF 0.90 AND Cf FACTOR OF 1.32. THE SYSTEM IS DESIGNED FOR THE MAX WIND LOADS SHOWN IN THE A/C STAND SCHEDULE.
4. THE MAXIMUM SIZE OF A/C UNIT IS SHOWN IN THE A/C STAND SCHEDULE.
5. STANDS SHALL BE INSTALLED WITH A MINIMUM CLEAR HEIGHT IN ACCORDANCE WITH F.B.C. CHAPTER 15, SECTION 1522 AND TABLE 1522.3.
6. ALUMINUM DESIGN IS IN ACCORDANCE WITH THE F.B.C. CHAPTER 20 AND THE ALUMINUM ASSOCIATION SPECIFICATIONS FOR ALUMINUM STRUCTURES.
7. ALUMINUM ALLOYS SHALL BE AS NOTED ON DRAWINGS. ALL WELDING SHALL BE PERFORMED WITH 5183 FILLER ALLOY, U.O.N..
8. A/C CONTRACTOR SHALL PROVIDE VIBRATION ISOLATOR PADS BETWEEN A/C UNIT AND STAND.
9. A FLORIDA REGISTERED ENGINEER SHALL VERIFY CAPACITY OF EXISTING STRUCTURE TO SUPPORT A/C STAND LOADS SHOWN IN FRAME SCHEDULE.
10. WHERE ALTERNATE CONNECTIONS OF A/C UNIT TO FRAME ARE REQUIRED, CONNECTIONS SHALL BE DESIGNED FOR THE ACTUAL WIND LOADS WITH CONSIDERATION OF UPLIFT, OVERTURNING & SLIDING. CONNECTIONS TO RAIL SHALL NOT INDUCE TORSIONAL FORCES.

PRODUCT REVISED
as complying with the Florida Buiding Code
Acceptance No 05-0926.01
Expiration Date 09/05/2007
By Helmy A. Mahar
Miami Dade Product Control Division

Thornton-Tomasetti Group
330 N. Andrews Ave. Suite 450 • Ft. Lauderdale, FL 33301
Tel. (954) 522-3690 • Fax (954) 522-3691 • COA # 7519
Website: www.TheTTGroup.com

Copyright © 2005 Thornton-Tomasetti Group, Inc.

AIR CONDITIONING STAND

ALUMISTAND & VIBRA-DAMP CORPORATION OF AMERICA
3350 BURRIS ROAD
FT. LAUDERDALE, FL 33314
(954) 564-6001
(800) 266-7212

John W. Knezevich
Professional Engineer
FL License No.: PE 0041961

SEP 21 2005

revisions

no	date	by	description
00	09/21/05	ZL	PREVIOUSLY DRAWING NO. "0-39"

date 09/21/2005
scale AS NOTED
drawn by MCR
design by ZL
checked by JWK
drawing no. 05-378
sheet 1 of 3

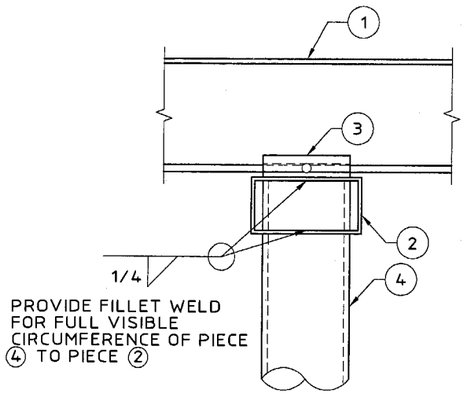

(B) FRAME ASSEMBLY DETAIL
SCALE: 3" = 1'-0"

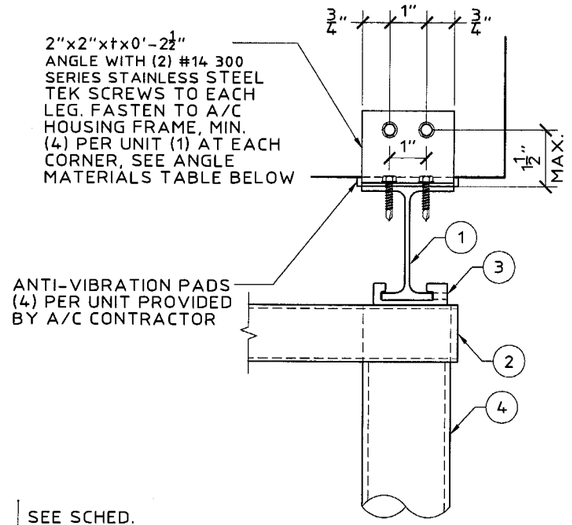

(C) A/C UNIT CONNECTION TO FRAMING 1
SCALE: 3" = 1'-0"

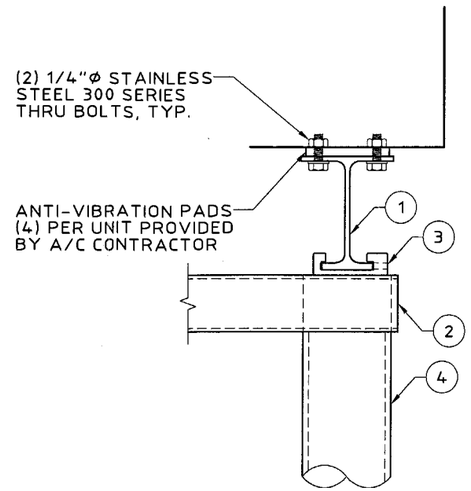

(D) A/C UNIT CONNECTION TO FRAMING 2
SCALE: 3" = 1'-0"

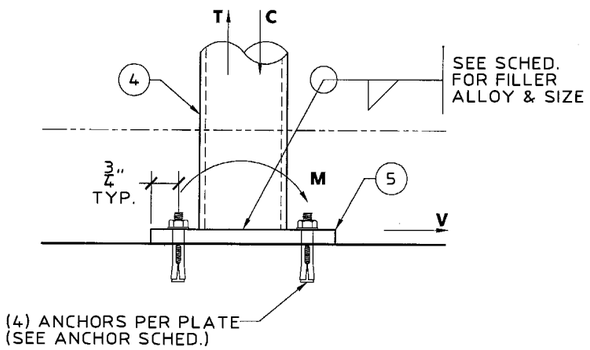

(F) BASE PLATE REACTION DIAGRAM
SCALE: 3" = 1'-0"

ANGLE MATERIALS				
	t (IN.)	ALUM. ALLOY 6063-T6	ASTM A653 GRADE 50	STAINLESS STEEL 303
ASSEMBLY NO.	1,2&3	0.125"	0.100"	0.125"
	4,5,6&7	0.1875"	0.130"	0.1875"

A/C STAND SCHEDULE

ASSEMBLY NO.	AC UNIT HxWxD	FRAME TYPE	POST SIZE O.D. (in)	POST SIZE t (in)	TUBE SIZE WxHxt (inxinxin)	BASE PLATE (BxBxt)	MAX. DESIGN WIND PRESSURE (PSF) BASE PLATE WELD TYPE 4043-1/4	MAX. DESIGN WIND PRESSURE (PSF) BASE PLATE WELD TYPE 4043-3/8 OR 5183-1/4	MAX STD HEIGHT (in)	UNIT WT (lbs)	MAX. SUPPORT REACTIONS T (lbs)	MAX. SUPPORT REACTIONS C (lbs)	MAX. SUPPORT REACTIONS V (lbs)	MAX. SUPPORT REACTIONS M (lb-in)
1	24x24x24	C	1.75	0.065	2.03x1.4x0.050	4x4x1/4	76	76	18.5	200	183	359	167	1616
	24x24x24	C	1.75	0.065	2.03x1.4x0.050	4x4x1/4	61	61	24	200	159	335	134	1684
	24x24x24	C	1.75	0.065	2.03x1.4x0.050	4x4x1/4	49	49	30	200	137	313	108	1686
2	24x24x24	A	1.75	0.065	2.03x1.4x0.050	5x5x1/4	78	78	18.5	200	189	365	172	1659
	24x24x24	A	1.75	0.065	2.03x1.4x0.050	5x5x1/4	61	61	24	200	159	335	134	1684
	24x24x24	A	1.75	0.065	2.03x1.4x0.050	5x5x1/4	49	49	30	200	137	313	108	1686
3	24x24x24	B	1.75	0.08	2.03x1.4x0.050	5x5x1/4	86	86	18.5	200	206	382	189	1968
	24x24x24	B	1.75	0.08	2.03x1.4x0.050	5x5x1/4	70	70	24	200	182	358	154	2066
	24x24x24	B	1.75	0.08	2.03x1.4x0.050	5x5x1/4	56	56	30	200	157	333	123	2046
4	36x30x30	D-1	2	0.100	2.5x1.5x0.093	5x5x5/16	57	64	24	300	430	622	240	3058
	36x30x30	D-1	2	0.100	2.5x1.5x0.093	5x5x5/16	46	54	30	300	393	585	203	3210
	36x30x30	D-1	2	0.100	2.5x1.5x0.093	5x5x5/16	39	46	36	300	360	552	173	3266
5	36x30x30	D-2	2	0.125	2.5x1.5x0.093	5x5x3/8	57	80	24	300	555	747	300	3823
	36x30x30	D-2	2	0.125	2.5x1.5x0.093	5x5x3/8	46	65	30	300	488	680	244	3864
	36x30x30	D-2	2	0.125	2.5x1.5x0.093	5x5x3/8	39	55	36	300	445	637	206	3905
6	40x30x30	E	2.375	0.154	3.0x1.5x0.093	5x5x3/8	62	71	24	300	588	788	308	4276
	40x30x30	E	2.375	0.154	3.0x1.5x0.093	5x5x3/8	51	60	30	300	536	736	260	4463
	40x30x30	E	2.375	0.154	3.0x1.5x0.093	5x5x3/8	43	52	36	300	500	700	226	4587
7	40x40x40	E	2.375	0.154	3.0x1.5x0.093	5x5x3/8	61	70	24	300	612	765	311	4317
	40x40x40	E	2.375	0.154	3.0x1.5x0.093	5x5x3/8	50	59	30	300	558	712	262	4493
	40x40x40	E	2.375	0.154	3.0x1.5x0.093	5x5x3/8	42	51	36	300	520	674	226	4607

ANCHOR SCHEDULE

BASE PLATE SIZE	EXISTING STRUCTURE	ANCHOR TYPE
4"x4"x1/4" & 5"x5"x1/4"	CONCRETE	(4) 5/16"Ø POWERS LOK BOLTS WITH 1-1/2" MIN. EMBEDMENT IN CONCRETE AND 3-3/4" MIN. EDGE DIST. TO MIN. 3 KSI CONCRETE.
5"x5"x5/16"	CONCRETE	(4) 3/8"Ø POWERS LOK/BOLT SLEEVE ANCHORS WITH 1-5/8" MIN. EMBEDMENT IN CONCRETE & 4-1/2" MIN. EDGE DIST. TO MIN. 3 KSI CONCRETE.
5"x5"x3/8"	CONCRETE	(4) 1/2"Ø POWERS LOK/BOLT SLEEVE ANCHORS WITH 2-1/4" MIN. EMBEDMENT IN CONCRETE & 6" MIN. EDGE DIST. TO MIN. 3 KSI CONCRETE.
4"x4"x1/4" & 5"x5"x1/4"	WOOD	(4) 3/8"Ø STAINLESS STEEL LAG SCREW WITH 2" MIN. EMBEDMENT IN WOOD FRAMING BEYOND PLYWOOD & MIN. 1" EDGE DIST.
5"x5"x5/16" & 5"x5"x3/8"	STEEL	(4) #12-14 ITW BUILDEX TEK-SELF DRILLING FASTENERS WITH BONDED WASHER. FASTEN DIRECTLY TO EXIST. STEEL MEMBERS, NOT THRU METAL DECK OR ROOFING.
4"x4"x1/4" & 5"x5"x1/4"	WOOD	(4) 3/8"Ø STAINLESS STEEL LAG SCREW WITH 3-1/2" MIN. EMBEDMENT IN WOOD FRAMING BEYOND PLYWOOD & MIN. 1" EDGE DIST.
5"x5"x5/16" & 5"x5"x3/8"	STEEL	(4) 3/8"Ø A307 GALVANIZED BOLTS WITH NUT & WASHER. FASTEN DIRECTLY TO EXIST. STEEL MEMBERS, NOT THRU METAL DECK OR ROOFING.

NOTE:
A FLORIDA REGISTERED ENGINEER SHALL VERIFY THAT THE EXISTING STRUCTURE IS CAPABLE OF RESISTING THE LOADS IMPOSED SHOWN IN THE FRAME SCHEDULE. DO NOT ATTACH TO STEEL JOISTS WITHOUT COORDINATING WITH JOIST MANUFACTURER OR APPROVAL OF PROFESSIONAL ENGINEER.

PRODUCT REVISED
as complying with the Florida
Building Code
Acceptance No 05-0926.01
Expiration Date 09/05/2007
By Helmy A. Mahr
Miami Dade Product Control
Division

Thornton-Tomasetti Group
330 N. Andrews Ave., Suite 450 • Ft. Lauderdale, FL 33301
Tel. (954) 522-3690 • Fax (954) 522-3691 • COA # 7519
Website: www.TheTTGroup.com

Copyright © 2005 Thornton-Tomasetti Group, Inc.

AIR CONDITIONING STAND

ALUMISTANO & VIBRA-DAMP CORPORATION OF AMERICA
3350 BURRIS ROAD
FT. LAUDERDALE, FL 33314
(954) 564-6001
(800) 266-7212

John W. Knezevich
Professional Engineer
FL License No.: PE 0041961

SEP 21 2005

revisions			
no	date	by	description
00	09/21/05	ZL	PREVIOUSLY DRAWING NO. 00-339

date 09/21/2005
scale AS NOTED
drawn by MCR
design by ZL
checked by JWK
drawing no. 05-378
sheet 2 of 3

Print Information: P:\FL1\Projects\KK5378.00\Drawings\R0-prg\05-378-02.dwg ZLiang 09/21/2005 05:13:57pm 07/21/05 15:41

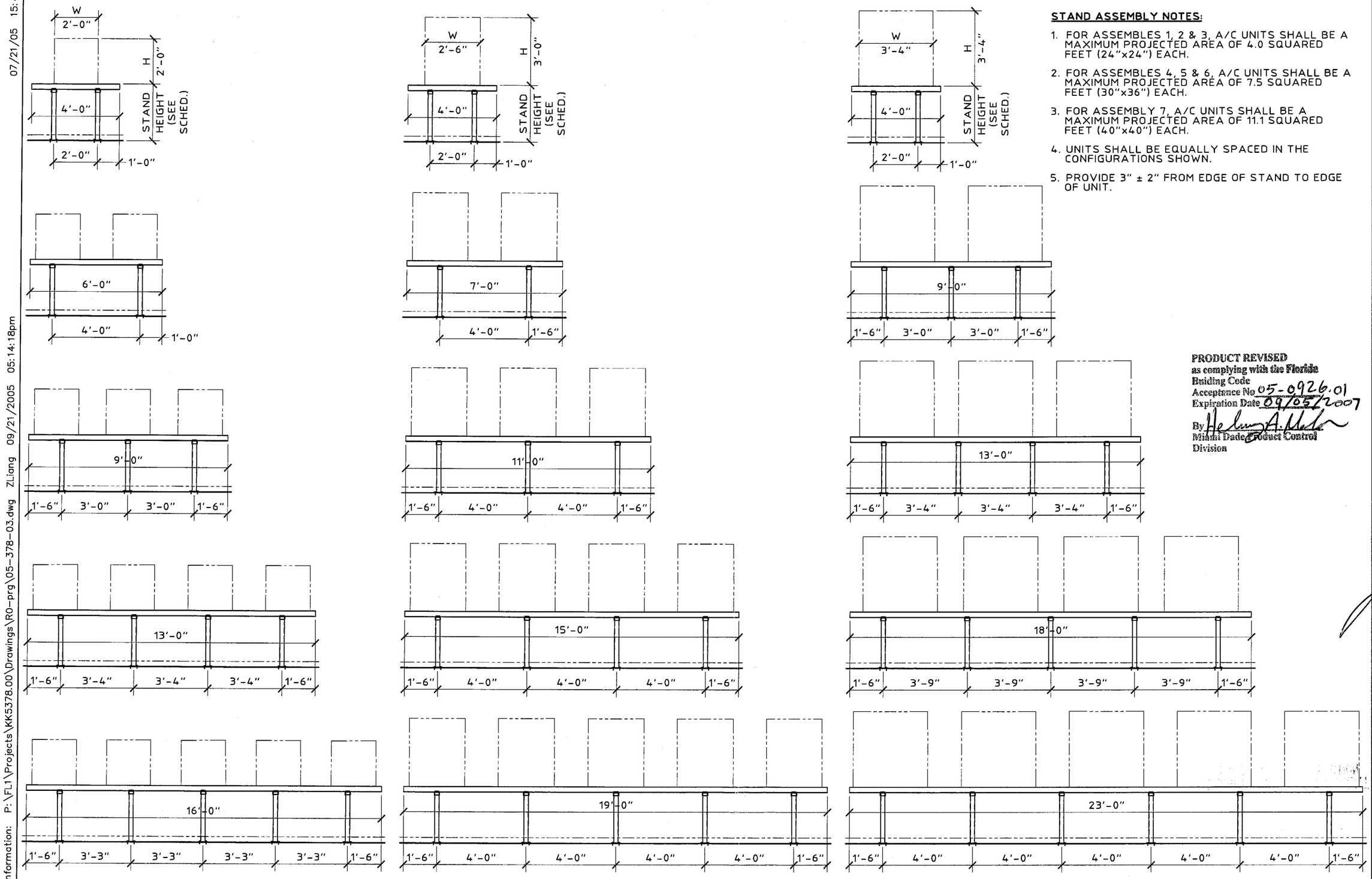

A ASSEMBLIES 1, 2 & 3
SCALE: 1/4" = 1'-0"

B ASSEMBLIES 4, 5 & 6
SCALE: 1/4" = 1'-0"

C ASSEMBLY 7
SCALE: 1/4" = 1'-0"

STAND ASSEMBLY NOTES:

1. FOR ASSEMBLES 1, 2 & 3, A/C UNITS SHALL BE A MAXIMUM PROJECTED AREA OF 4.0 SQUARED FEET (24"x24") EACH.
2. FOR ASSEMBLES 4, 5 & 6, A/C UNITS SHALL BE A MAXIMUM PROJECTED AREA OF 7.5 SQUARED FEET (30"x36") EACH.
3. FOR ASSEMBLY 7, A/C UNITS SHALL BE A MAXIMUM PROJECTED AREA OF 11.1 SQUARED FEET (40"x40") EACH.
4. UNITS SHALL BE EQUALLY SPACED IN THE CONFIGURATIONS SHOWN.
5. PROVIDE 3" ± 2" FROM EDGE OF STAND TO EDGE OF UNIT.

PRODUCT REVISED
as complying with the Florida
Building Code
Acceptance No. 05-0926.01
Expiration Date 09/05/2007
By Helena A. Mata
Miami Dade Product Control
Division

Thornton-Tomasetti Group
330 N. Andrews Ave., Suite 450 • Ft. Lauderdale, FL 33301
Tel. (954) 522-3690 • Fax (954) 522-3691 • COA # 7519
Website: www.TheTTGroup.com

Copyright © 2005 Thornton-Tomasetti Group, Inc.

AIR CONDITIONING STAND

ALUMISTAND & V IBRA-DAMP CORPORATION OF AMERICA
3350 BURRIS ROAD
FT. LAUDERDALE, FL 33314
(954) 984-6001
(800) 266-7212

John W. Knezevich
Professional Engineer
FL License No.: PE 0041961

SEP 21 2005

revisions

no	date	by	description
00	09/21/05	ZL	PREVIOUSLY DRAWING NO. 00-339

date 09/21/2005
scale AS NOTED
drawn by MCR
design by ZL
checked by JWK
drawing no. 05-378
sheet 3 of 3

Print Information: P:\FL1\Projects\KK5378.00\Drawings\R0-prg\05-378-03.dwg ZLiang 09/21/2005 05:14:18pm 07/21/05 15:43