MIAMI-DADE COUNTY
BUILDING CODE COMPLIANCE OFFICE (BCCO)
PRODUCT CONTROL DIVISION

MIAMI-DADE COUNTY, FLORIDA
METRO-DADE FLAGLER BUILDING
140 WEST FLAGLER STREET, SUITE 1603
MIAMI, FLORIDA 33130-1563
(305) 375-2901 FAX (305) 375-2908
www.buildingcodeonline.com

NOTICE OF ACCEPTANCE (NOA)

Rolling Shield Inc.
2500 N. W. 74th Avenue
Miami, FL 33122

SCOPE:
This NOA is being issued under the applicable rules and regulations governing the use of construction materials. The documentation submitted has been reviewed by Miami-Dade County Product Control Division and accepted by the Board of Rules and Appeals (BORA) to be used in Miami Dade County and other areas where allowed by the Authority Having Jurisdiction (AHJ).
This NOA shall not be valid after the expiration date stated below. The Miami-Dade County Product Control Division (In Miami Dade County) and/or the AHJ (in areas other than Miami Dade County) reserve the right to have this product or material tested for quality assurance purposes. If this product or material fails to perform in the accepted manner, the manufacturer will incur the expense of such testing and the AHJ may immediately revoke, modify, or suspend the use of such product or material within their jurisdiction. BORA reserves the right to revoke this acceptance, if it is determined by Miami-Dade County Product Control Division that this product or material fails to meet the requirements of the applicable building code.
This product is approved as described herein, and has been designed to comply with the Florida Building Code including the High Velocity Hurricane Zone.
DESCRIPTION: Extruded Aluminum 40mm Slat Roll-Up Shutters
APPROVAL DOCUMENT: Drawing No. **05-216**, titled "40mm Slat Roll-Up Shutter", prepared by Tilteco Inc., 04-09-07, sheets 1 through 16 of 16 including 1A, 3A and 5A, signed and sealed by Walter A. Tillit Jr., P. E., bearing the Miami-Dade County Product Control Revision stamp with the Notice of Acceptance number and expiration date by the Miami-Dade County Product Control Division.
MISSILE IMPACT RATING: Large and Small Missile Impact
Limitation:

1. Roll-up Mechanism is Not part of this approval and must be certified by independent testing agency.
2. Minimum separation from interior storm bar to existing glass shall be as shown on sheet 12 of 16.

LABELING: Each unit shall bear a permanent label with the manufacturer's name or logo, city, state and the following statement: "Miami-Dade County Product Control Approved or MDCPCA", unless otherwise noted herein.
RENEWAL of this NOA shall be considered after a renewal application has been filed and there has been no change in the applicable building code negatively affecting the performance of this product.
TERMINATION of this NOA will occur after the expiration date or if there has been a revision or change in the materials, use, and/or manufacture of the product or process. Misuse of this NOA as an endorsement of any product, for sales, advertising or any other purposes shall automatically terminate this NOA. Failure to comply with any section of this NOA shall be cause for termination and removal of NOA.
ADVERTISEMENT: The NOA number preceded by the words Miami-Dade County, Florida, and followed by the expiration date may be displayed in advertising literature. If any portion of the NOA is displayed, then it shall be done in its entirety.
INSPECTION: A copy of this entire NOA shall be provided to the user by the manufacturer or its distributors and shall be available for inspection at the job site at the request of the Building Official.
This member NOA **revises** NOA # **04-0512.07** and consists of this page, evidence page E-1 as well as approval document mentioned above.
The submitted documentation was reviewed by **Ishaq I. Chanda, P.E.**

PRODUCT CONTROL ACCEPTED

4/23/7

NOTICE OF ACCEPTANCE: EVIDENCE PAGE

A **DRAWING** (Submitted under association file # **06-0143** (# 03-0458)

1. Manufacturers extruded drawings and sections.
2. Drawing No. **05-216**, titled "40mm Slat Roll-Up Shutter", prepared by Tilteco Inc., 04-09-07, sheets 1 through 16 of 16 including 1A, 3A and 5A, signed and sealed by Walter A. Tillit Jr., P. E.

B **TEST**: Submitted under association file # **06-0143** (# 03-0458)

C **CALCULATIONS:** Submitted under association file # **06-0143** (# 03-0458)

1. Comparative analysis for slats; storm bars, headers, tracks, mullions and anchors, using rational analysis dated 08/17/05, pages 1 through 139 of 139, prepared by Tilteco, Inc. signed and sealed by Walter A. Tillit Jr., PE
2. Comparative analysis for slats; storm bars, headers, tracks, mullions and anchors, using rational analysis dated 01/18/00, pages 1 through 172 of 172, prepared by Tilteco, Inc. signed and sealed by W. A. Tillit, PE. (per association file # **03-0458**)
3. Comparative analysis of Storm Bars w/ Spring Loaded System using rational analysis pages 1 through 12 of 12, prepared by Tilteco, Inc, signed and sealed by Walter A. Tillit Jr., PE on 05/03/01 (per association file # **03-0458**)

D. **QUALITY ASSURANCE**

1. Miami Dade Building Code Compliance Office (BCCO).

E **MATERIAL CERTIFICATION:** Submitted under association file # **06-0143** (# 03-0458)

1. None

F **STATEMENTS** (transferred from file # **04-0512.07)**

1. Statement Letter of product compliance to FBC & "No financial interest" dated April 09, 2007, signed and sealed by Walter A. Tillit Jr., P. E.
2. Lab compliance letter, as part of above referenced test reports.
3. Release letter issued by National Shutter Association, Inc on 04-10-07 for "40mm Rolling Shield Shutters, signed by Sam Downs, Association President.
4. Acknowledgement letter issued by Rolling Shield, Inc. on 04/13/07, signed by J. A. Delgado, president Rolling Shield, Inc.
5. Assignment letter issued by Rolling Shield, Inc. on 08/20/2001, signed by J. A. Delgado from Rolling Shield, Inc. and F. Tonda from National Shutter Association, Inc
6. Partial changes letter issued by Tilteco, Inc on 05/28/03 signed and sealed by W. A. Tillit Jr. PE.
7. Release letter issued by National Shutter Association, Inc on 09/15/03 and signed by J. A. Delgado.
8. Compliance letter issued by Rolling shield Parts, Inc. on 09/15/03 and signed by J. A. Delgado.
9. No change letter for renewal issued by Rolling shield on 05/10/04 and signed by S. Sanso

G **OTHER**

1. This NOA **revises** NOA # **04-0512.07** (03-0123.10), expiring June 07, 2009.
2. This NOA is approved as a member of National Shutter Association, Inc. under association file # **06-0143** (03-0458)
3. Release letter issued by National Shutter Association, Inc on 04-10-07 for "40mm Rolling Shield Shutters, signed by Sam Downs, Association President.
4. Acknowledgement letter issued by Rolling Shield, Inc. on 04/13/07, signed by J. A. Delgado, president Rolling Shield, Inc.

Ishaq I. Chanda

Ishaq I. Chanda, P. E.
Product Control Examiner
NOA No 05-0929.04
Expiration Date: June 07, 2009
Approval Date: May 17, 2007

GENERAL NOTES:

1. ROLL-UP SHUTTERS SHOWN ON THIS PRODUCT APPROVAL DOCUMENT (P.A.D.) HAS BEEN VERIFIED FOR COMPLIANCE IN ACCORDANCE WITH THE 2004 EDITION OF THE FLORIDA BUILDING CODE.
   DESIGN WIND LOADS SHALL BE DETERMINED AS PER SECTION 1620 OF THE ABOVE MENTIONED CODE.
   IN ORDER TO VERIFY THAT COMPONENTS AND ANCHORS ON THIS P.A.D. AS TESTED WERE NOT OVER STRESSED, A 33% INCREASE IN ALLOWABLE STRESS FOR WIND LOADS WAS **NOT** USED IN THEIR ANALYSIS.
   A DURATION FACTOR CD=1.60 WAS USED FOR VERIFICATION OF FASTENERS IN WOOD.
   ROLL-UP SHUTTER'S ADEQUACY FOR IMPACT AND FATIGUE RESISTANCE HAS BEEN VERIFIED IN ACCORDANCE WITH SECTION 1609.1.4 OF THE ABOVE MENTIONED CODE AS PER FENESTRATION TESTING LAB. REPORTS # 2485, 2637, 2640, 2641, 2642, 2736, 2737 & 3013 AS PER TAS-201,TAS-202 AND TAS-203 PROTOCOLS.
2. ALL ALUMINUM EXTRUSIONS SHALL BE 6063-T6 ALLOY (UNLESS OTHERWISE NOTED).
3. ALL SCREWS TO BE STAINLESS STEEL 304 OR 316 SERIES W/50 ksi YIELD STRENGTH AND 90 ksi TENSILE STRENGTH.
4. BOLTS TO BE 2024-T4 ALUMINUM ALLOY, GALVANIZED OR STAINLESS STEEL WITH 36 ksi MINIMUM YIELD STRENGTH.
5. STORM BARS AT FLOOR OR CEILING MOUNTING INSTALLATIONS MAY BE REMOVABLE AT NON HURRICANE CONDITIONS. HOWEVER, EACH STORM BAR SHALL BEAR A PERMANENT LABEL IN A VISIBLE PLACE WITH A WARNING NOTE INSTRUCTING THE TENANT OR OWNER THAT STORM BARS MUST BE INSTALLED WITH CORRESPONDING HARDWARE DURING PERIODS OF HURRICANE WARNING AND THAT ROLL UP SHUTTERS WILL NOT OFFER HURRICANE PROTECTION UNLESS ALL STORM BARS ARE INSTALLED AS DIRECTED.
6. REMOVABLE STORM BARS SHALL BE STORED IN A CONSPICUOUS PLACE WITH EASY AND IMMEDIATE ACCESS SO THAT THEY CAN BE REACHED AND INSTALLED ANY TIME (HURRICANE CONDITIONS OR NOT) SLATS ARE ROLLED DOWN. THE EFFECT OF THE SLATS ROLLED DOWN WITHOUT STORM BARS IS; THOSE SLATS WILL SLIP OUT OF TRACK DUE TO THE DEFLECTION CAUSED BY WIND FORCES.
7. ANCHORS TO WALL FOR SIDE RAILS & BOX CONNECTION SHALL BE AS FOLLOWS: (UNLESS OTHERWISE NOTED)

   (A) TO EXISTING POURED CONCRETE: MIN. 3320 p.s.i. COMPRESSIVE STRENGTH.

   -1/4" ø TAPCON ANCHORS AS MANUFACTURED BY ELCO TEXTRON.

   NOTES:

   A.1) MINIMUM EMBEDMENT OF TAPCON ANCHORS INTO POURED CONCRETE SHALL BE 1 3/4". NO EMBEDMENT INTO STUCCO SHALL BE CONSIDERED AS PART OF THE REQUIRED EMBEDMENT.

   A.2) IN CASE THAT PRECAST STONE, PRECAST CONCRETE PANELS, OR PAVERS BE FOUND ON THE EXISTING WALL OR FLOOR, ANCHORS SHALL BE LONG ENOUGH TO REACH THE MAIN STRUCTURE BEHIND SUCH PANELS.

   (B) TO EXISTING CONCRETE BLOCK WALL:

   -1/4" ø TAPCON ANCHORS, AS MANUFACTURED BY ELCO TEXTRON.

   NOTES:

   B.1) MINIMUM EMBEDMENT OF TAPCON ANCHORS, INTO THE CONCRETE BLOCK UNIT SHALL BE 1 1/4".

   B.2) IN CASE THAT PRECAST STONE OR PRECAST CONCRETE PANELS BE FOUND ON THE EXISTING WALL, ANCHORS SHALL BE LONG ENOUGH TO REACH THE MAIN STRUCTURE BEHIND SUCH PANELS.

   (C) ANCHORS SHALL BE INSTALLED FOLLOWING ALL OF THE RECOMMENDATIONS AND SPECIFICATIONS OF THE ANCHOR'S MANUFACTURER.

   (D) ANCHORS REQUIRED FOR STORM BARS, HEADERS & MULLION CONNECTIONS SHALL BE AS SPECIFIED ON APPLICABLE SECTIONS SHOWN ON SHEETS 5, 6, 7, 8 & 10 OF 16 RESPECTIVELY.

   POWER BOLTS & CALK-IN ANCHORS TO BE AS MANUFACTURED BY POWERS FASTENERS, INC.

   MINIMUM EDGE DISTANCE AND SPACING FOR ABOVE MENTIONED ANCHORS SHALL BE AS INDICATED BELOW OR AT ABOVE MENTIONED SHEETS, WHICHEVER IS LARGER (MORE CRITICAL).

ANCHOR	SPACING	EDGE DISTANCE
3/8"ø POWER BOLT	3 3/4"	4 1/2"
1/4"ø CALK-IN	2 1/2"	3"
3/8"ø CALK-IN	3 3/4"	4 1/2"
5/8"ø CALK-IN	6 1/4"	7 1/2"
1/4"ø TAPCON	3"	2 1/2"

8. POLYETHYLENE BLOCKS USED AT SPRING LOADED SYSTEM FOR REMOVABLE STORM BARS SHALL COMPLY WITH THE FOLLOWING SPECIFICATIONS:

ASTM DESIGNATION	PROPERTIES	VALUE
D256	IMPACT RESISTANCE	7.95 FT-Lb/In (AVERAGE)
D638	TENSILE CAPACITY	4243 psi (AVERAGE)
D790	FLEXURAL CAPACITY	1012 psi (AVERAGE)

9. IT SHALL BE THE RESPONSIBILITY OF THE CONTRACTOR TO VERIFY THE SOUNDNESS OF THE STRUCTURE WHERE SHUTTER IS TO BE ATTACHED TO INSURE PROPER ANCHORAGE.
10. SHUTTER MANUFACTURER'S LABEL SHALL BE PLACED ON THE EXPOSED SURFACE OF THE SIDE RAIL APPROXIMATELY 4" ABOVE THE BOTTOM OF SUCH RAIL.
    LABEL SHALL READ AS FOLLOWS:
    ROLLINGSHIELD, INC
    MIAMI, FL
    MIAMI-DADE COUNTY PRODUCT CONTROL APPROVED.
11. ROLL-UP MECHANISM NOT PART OF THIS APPROVAL, BUT SHALL BE CERTIFIED BY AN INDEPENDENT TESTING AGENCY.
12. (a) THIS P.A.D. PREPARED BY THIS ENGINEER IS GENERIC AND DOES NOT PROVIDE INFORMATION FOR A SITE SPECIFIC PROJECT; i.e. WHERE THE SITE CONDITIONS DEVIATE FROM THE P.A.D.

    (b) CONTRACTOR TO BE RESPONSIBLE FOR THE SELECTION, PURCHASE AND INSTALLATION INCLUDING LIFE SAFETY OF THIS PRODUCT, BASED ON THIS P.A.D. PROVIDED HE/SHE DOES NOT DEVIATE FROM THE CONDITIONS DETAILED ON THIS DOCUMENT. CONSTRUCTION SAFETY AT SITE IS THE CONTRACTOR'S RESPONSIBILITY.

    (c) THIS P.A.D. WILL BE CONSIDERED INVALID IF ALTERED BY ANY MEANS.

    (d) SITE SPECIFIC PROJECTS SHALL BE PREPARED BY A FLORIDA REGISTERED ENGINEER OR ARCHITECT WHICH WILL BECOME THE ENGINEER OF RECORD (E.O.R.) FOR THE PROJECT AND WHO WILL BE RESPONSIBLE FOR THE PROPER USE OF THE P.A.D.

    (e) THIS P.A.D. SHALL COMPLY WITH SECTION 2:61G15 OF THE FLORIDA ADMINISTRATIVE CODE.

PRODUCT REVISED
as complying with the Florida Building Code
Acceptance No 05-0429.04
Expiration Date JUNE 07, 2009
By Ishaq I. Lunda
Miami Dade Product Control Division

F.B.C. (HIGH VELOCITY HURRICANE ZONE)

4/9/07

TILTECO INC.
TILLIT TESTING & ENGINEERING COMPANY
6355 N.W. 36th. St., Ste.305 – VIRGINIA GARDENS, Fl. 33166
Phone : (305)871-1530 . Fax : (305)871-1531
EB-0006719
WALTER A. TILLIT Jr., P. E.
FLORIDA Lic. # 44167

40mm SLAT ROLL-UP SHUTTER

ROLLINGSHIELD, INC.
(N.S.A.# 1)
2500 N.W. 74th AVENUE
MIAMI, FLORIDA 33122
Phone : (305)436-6661 . Fax : (305)436-5523

REV. No	DESCRIPTION	DATE	REV. No	DESCRIPTION	DATE
1	OLD 02-536	08/9/05	3	GENERAL	3/30/07
2	ASSOCIATION NUMBER	4/14/06	4		

DRAWN BY: L.G.
08/9/05 DATE
05-216 DRAWING No
SHEET 1 OF 16

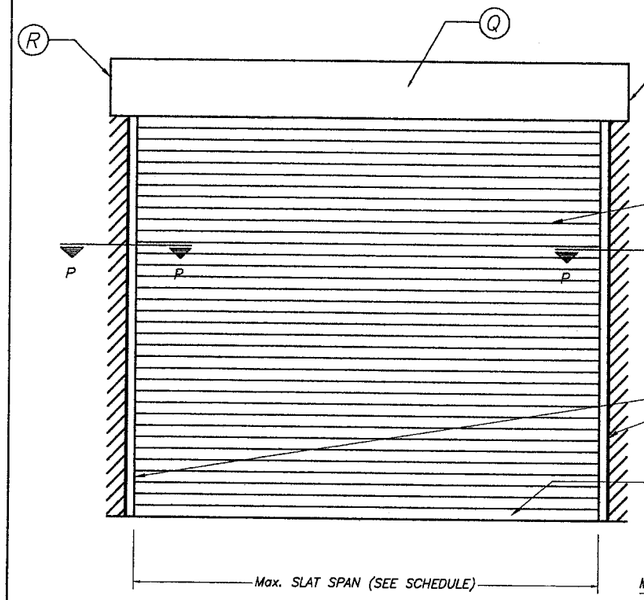

TYPICAL SINGLE UNIT ELEVATION (NO STORM BARS REQUIRED)

NOTE: SEE SHEET 2 & 3 OF 16 FOR COMPONENTS NOMENCLATURE.

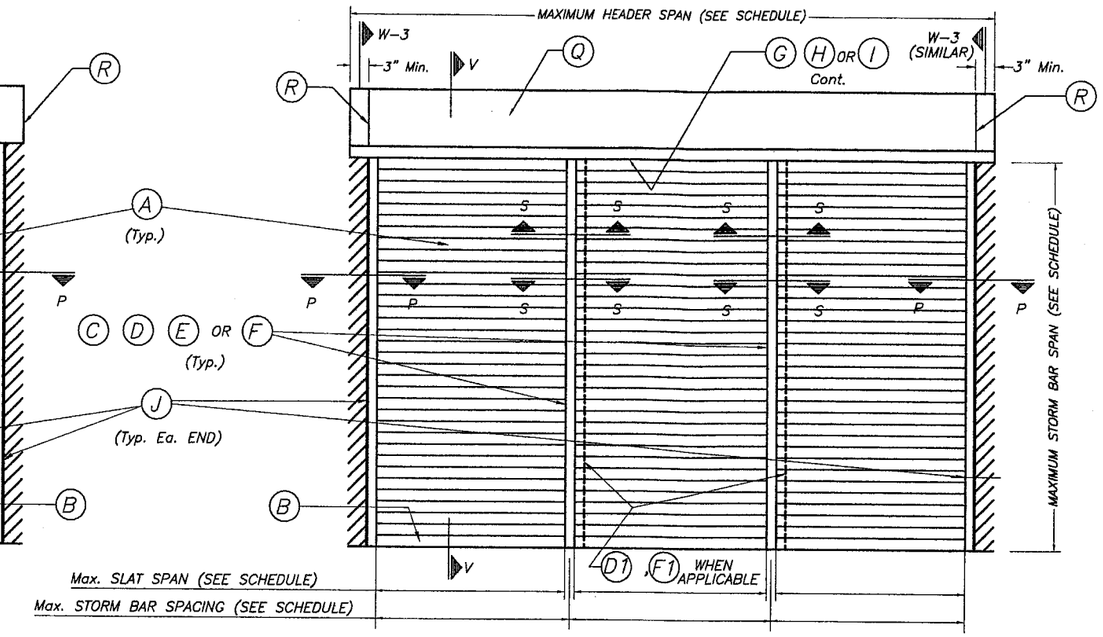

TYPICAL MULTIPLE UNIT ELEVATION (STORM BARS REQUIRED)

NOTE: SEE SHEET 2 & 3 OF 16 FOR COMPONENTS NOMENCLATURE.

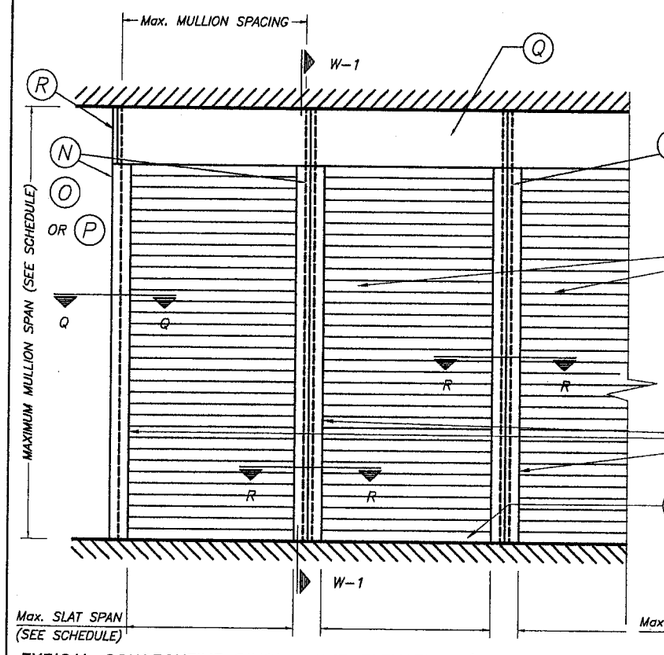

TYPICAL CONSECUTIVE SINGLE UNIT ELEVATION (NO STORM BARS REQUIRED)

NOTE: SEE SHEET 2 & 3 OF 16 FOR COMPONENTS NOMENCLATURE.

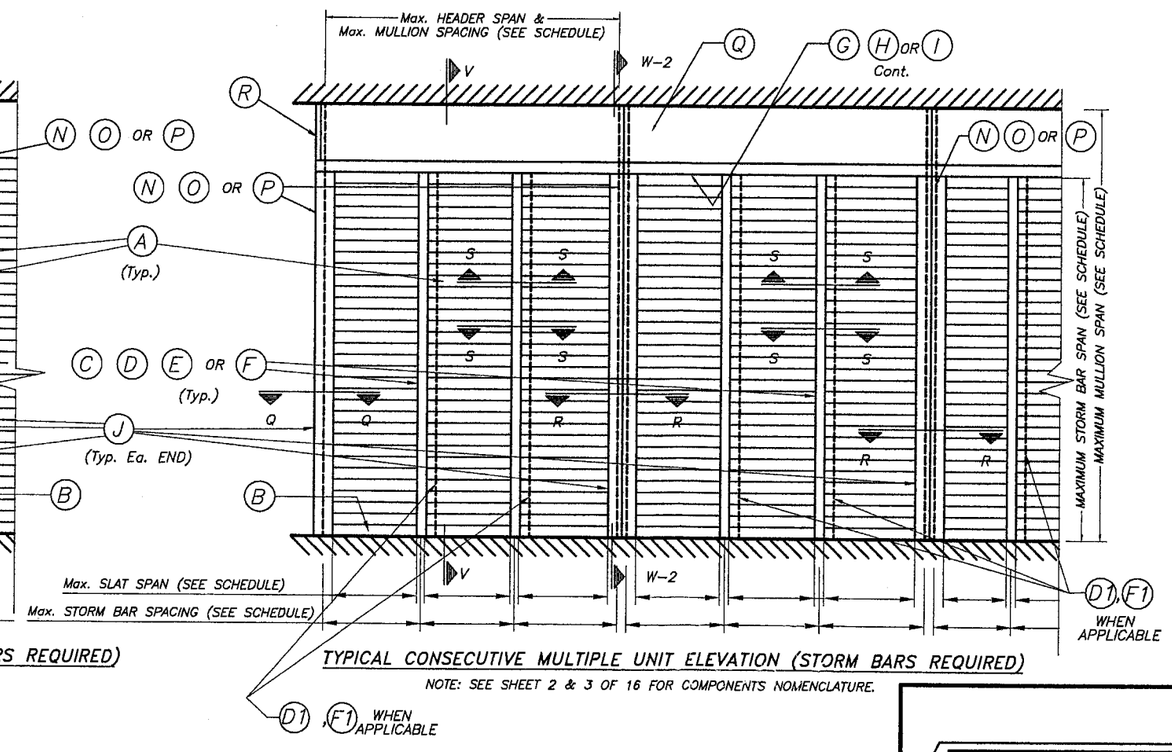

TYPICAL CONSECUTIVE MULTIPLE UNIT ELEVATION (STORM BARS REQUIRED)

NOTE: SEE SHEET 2 & 3 OF 16 FOR COMPONENTS NOMENCLATURE.

NOTE:
SEE SECTIONS ON
SHEETS 4 THRU 10.

4/9/07

PRODUCT REVISED
as complying with the Florida Building Code
Acceptance No 05-0929.04
Expiration Date JUNE 07, 2009
By Ishaq I. Chanda
Miami Dade Product Control Division

F.B.C. (HIGH VELOCITY HURRICANE ZONE)

TILTECO INC.
TILLIT TESTING & ENGINEERING COMPANY
6355 N.W. 36th. St., Ste.305 – VIRGINIA GARDENS, FL 33166
Phone : (305)871-1530 . Fax : (305)871-1531
EB-0006719
WALTER A. TILLIT Jr., P. E.
FLORIDA Lic. # 44167

40mm SLAT ROLL-UP SHUTTER

ROLLINGSHIELD, INC.
(N.S.A.# 1)
2500 N.W. 74th AVENUE
MIAMI, FLORIDA 33122
Phone : (305)436-6661 . Fax : (305)436-5523

REV. No	DESCRIPTION	DATE	REV. No	DESCRIPTION	DATE
1	OLD 02-536	08/9/05	3	GENERAL	3/30/07
2	ASSOCIATION NUMBER	4/14/06	4		

DRAWN BY: L.G.

08/9/05
DATE

05-216
DRAWING No

SHEET 1A OF 16

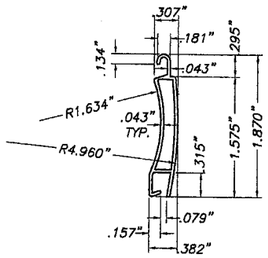

(A) TYPE 1 SLAT:
EXTRUDED ALUMINUM SLAT
6063-T6 ALUMINUM ALLOY
SCALE: 1/2" = 1"

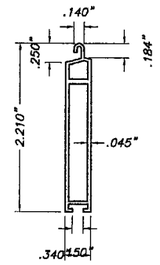

(B) TYPE 2 SLAT:
EXTRUDED ALUMINUM BOTTOM SLAT
6063-T6 ALUMINUM ALLOY
SCALE: 1/2" = 1"

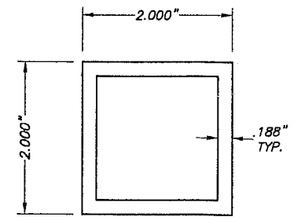

(C) TYPE 1 STORM BAR:
2" EXTRUDED STORM BAR
6063-T6 ALUMINUM ALLOY
SCALE: 1/2" = 1"

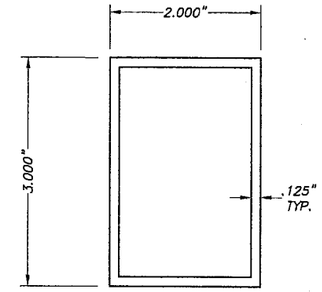

(D) TYPE 2 STORM BAR:
3" EXTRUDED STORM BAR
6063-T6 ALUMINUM ALLOY
SCALE: 1/2" = 1"

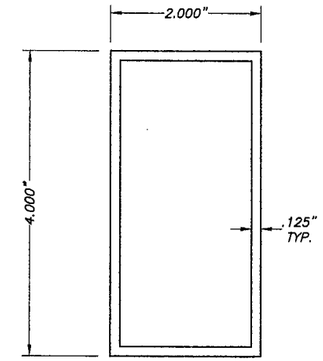

(E) TYPE 3 STORM BAR:
4" EXTRUDED STORM BAR
6063-T6 ALUMINUM ALLOY
SCALE: 1/2" = 1"

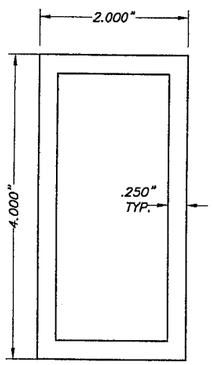

(F) TYPE 4 STORM BAR:
4" HEAVY EXTRUDED STORM BAR
6063-T6 ALUMINUM ALLOY
SCALE: 1/2" = 1"

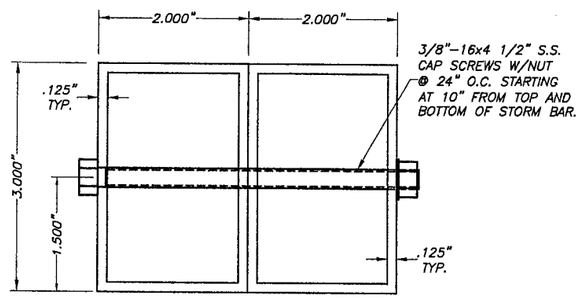

(D1) TYPE 5 STORM BAR:
3" EXTRUDED STORM BAR
6063-T6 ALUMINUM ALLOY
SCALE: 1/2" = 1"

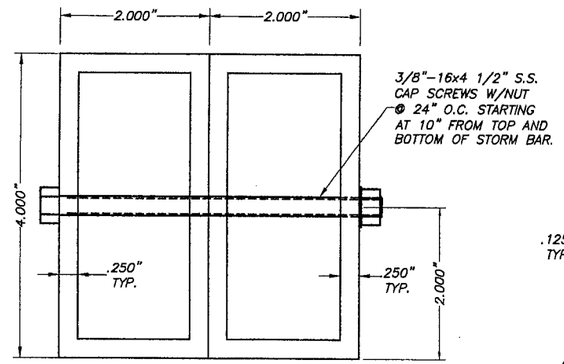

(F1) TYPE 6 STORM BAR:
4" HEAVY EXTRUDED STORM BAR
6063-T6 ALUMINUM ALLOY
SCALE: 1/2" = 1"

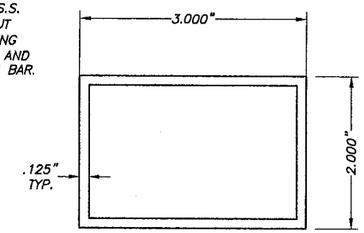

(G) HEADER TYPE 1:
6063-T6 ALUMINUM ALLOY
SCALE: 1/2" = 1"

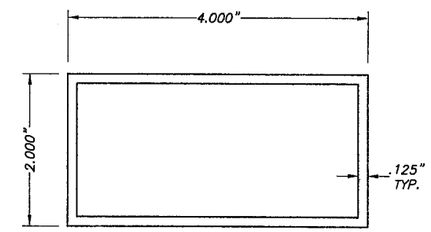

(H) HEADER TYPE 2:
6063-T6 ALUMINUM ALLOY
SCALE: 1/2" = 1"

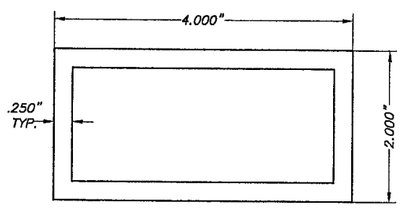

(I) HEADER TYPE 3:
6063-T6 ALUMINUM ALLOY
SCALE: 1/2" = 1"

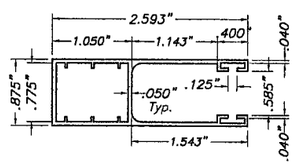

(J) TYPE 1 SIDE RAIL:
6063-T6 Alum. ALLOY
SCALE: 1/2" = 1"

PRODUCT REVISED
as complying with the Florida Building Code
Acceptance No 05-0929.04
Expiration Date JUNE 07, 2009
By Ishaq I. Chaudhry
Miami Dade Product Control Division

4/9/07

F.B.C. (HIGH VELOCITY HURRICANE ZONE)

TILTECO INC.
TILLIT TESTING & ENGINEERING COMPANY
6355 N.W. 36th. St., Ste.305 – VIRGINIA GARDENS, FL 33166
Phone : (305)871-1530 . Fax : (305)871-1531
EB-0006719
WALTER A. TILLIT Jr., P. E.
FLORIDA Lic. # 44167

40mm SLAT ROLL-UP SHUTTER

ROLLINGSHIELD, INC.
(N.S.A.# 1)
2500 N.W. 74th AVENUE
MIAMI, FLORIDA 33122
Phone : (305)436-6661 . Fax : (305)436-5523

REV. No	DESCRIPTION	DATE	REV. No	DESCRIPTION	DATE
1	OLD 02-536	08/9/05	3	GENERAL	3/30/07
2	ASSOCIATION NUMBER	4/14/06	4		

DRAWN BY: L.G.
08/9/05 DATE
05-216 DRAWING No
SHEET 2 OF 16

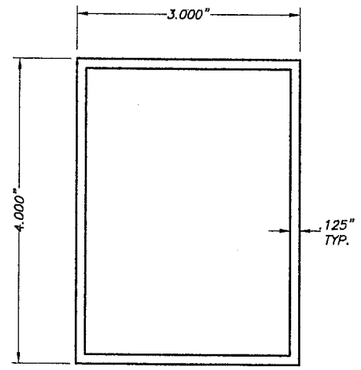

(N) TYPE 1 MULLION:

4" EXTRUDED MULLION
6063-T6 ALUMINUM ALLOY
SCALE: 1/2" = 1"

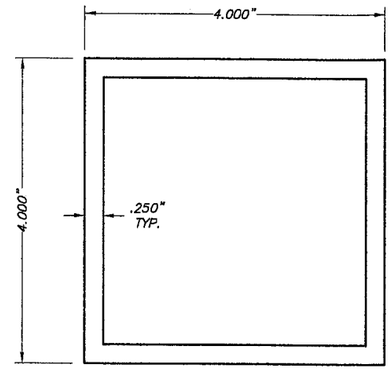

(O) TYPE 2 MULLION:

4" HEAVY EXTRUDED MULLION
6063-T6 ALUMINUM ALLOY
SCALE: 1/2" = 1"

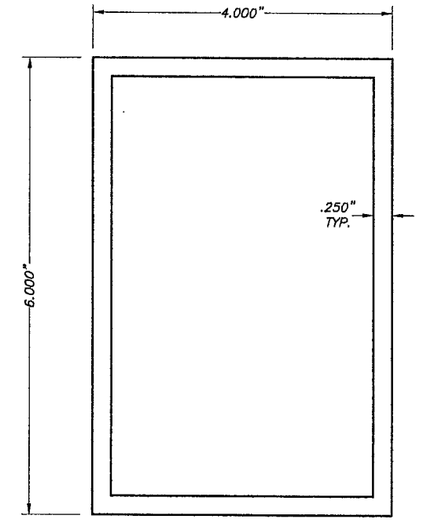

(P) TYPE 3 MULLION:

6" EXTRUDED MULLION
6063-T6 ALUMINUM ALLOY
SCALE: 1/2" = 1"

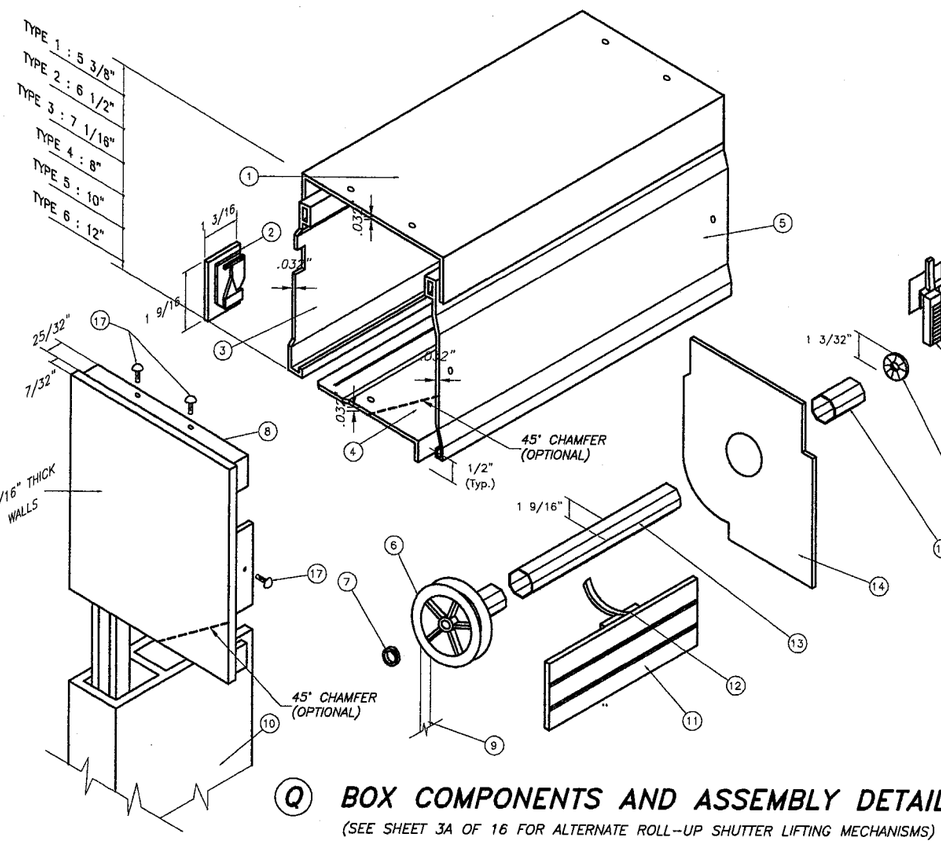

(Q) BOX COMPONENTS AND ASSEMBLY DETAIL

(SEE SHEET 3A OF 16 FOR ALTERNATE ROLL-UP SHUTTER LIFTING MECHANISMS)

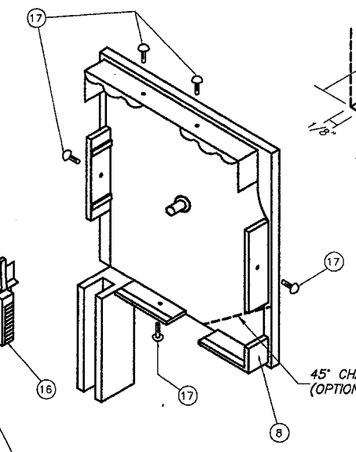

STUB DETAIL
(N. T. S.)

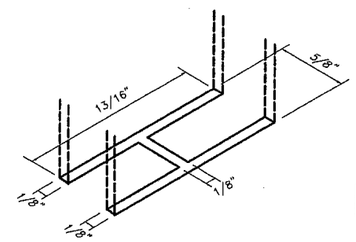

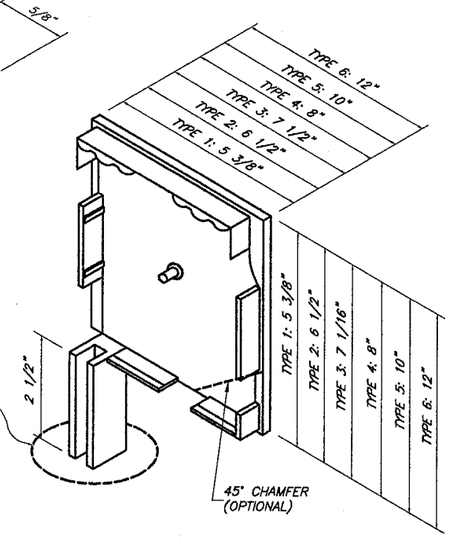

(R) BOX SIDE BRACKET TYPES

1. TOP PROFILE 3005-H28 ALLOY.
2. BOTTOM LEADER W/PLUSH.
3. REAR PROFILE 3005-H28 ALLOY.
4. BOTTOM PROFILE 3005-H28 ALLOY.
5. COVER PROFILE 3005-H28 ALLOY.
6. NYLON DISK: 4 1/4" O. D.
7. ROLLING CUSHION W/BALLS.
8. BOX SIDE BRACKET: CAST ALUMINUM.
9. RIBBON: 17/32" WIDE.
10. SIDE RAIL.
11. SLAT.
12. EXTRUDED ALUMINUM DRAWING HOOP.
13. GALVANIZED STEEL DRUM: 1 9/16" O. D. x 0.032" Thk.
14. RETAINING METAL PLATE: 26 Ga. Galv. Stl. AT EACH END.
15. NYLON FERRULE: 1 17/32" O. D. x 0.045" Thk. x 3 5/16" Long.
16. NYLON FUNNEL.
17. SCREWS: # 4 x 1/2" S. S.

4/4/05

PRODUCT REVISED
as complying with the Florida Building Code
Acceptance No 05-0929.04
Expiration Date JUNE 07, 2007
By Ishaq I. Chanda
Miami Dade Product Control Division

F.B.C. (HIGH VELOCITY HURRICANE ZONE)

TILTECO INC.
TILLIT TESTING & ENGINEERING COMPANY
6355 N.W. 36th. St., Ste.305 – VIRGINIA GARDENS, FL 33166
Phone : (305)871-1530 . Fax : (305)871-1531
EB-0006719
WALTER A. TILLIT Jr., P. E.
FLORIDA Lic. # 44167

40mm SLAT ROLL-UP SHUTTER

ROLLINGSHIELD, INC.
(N.S.A.# 1)
2500 N.W. 74th AVENUE
MIAMI, FLORIDA 33122
Phone : (305)436-8661 . Fax : (305)436-5523

REV. No	DESCRIPTION	DATE	REV. No	DESCRIPTION	DATE
1	OLD 02-536	08/9/05	3	GENERAL	3/30/07
2	ASSOCIATION NUMBER	4/14/06	4		

DRAWN BY: L.G.
08/9/05 DATE
05-216 DRAWING No
SHEET 3 OF 16

TYPE DRIVE ROLL-UP SHUTTER SYSTEM

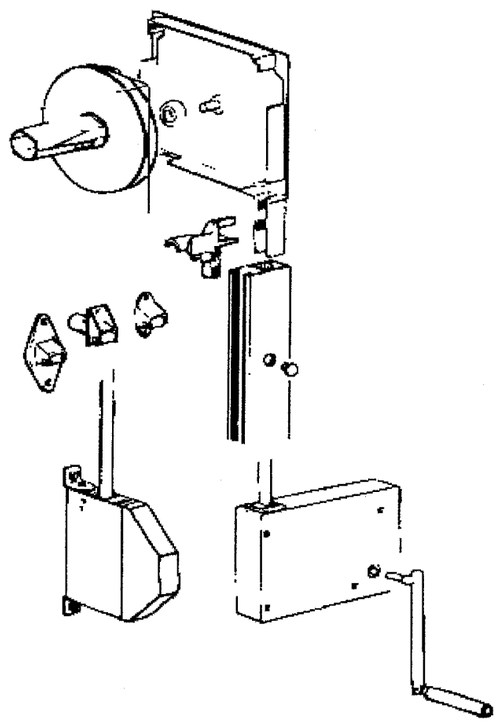

MOTORIZED ROLL-UP SHUTTER SYSTEM

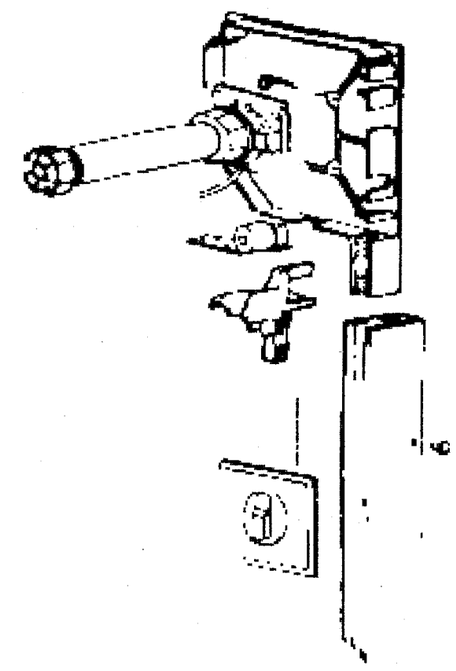

HAND CRANK ROLL-UP SHUTTER SYSTEM

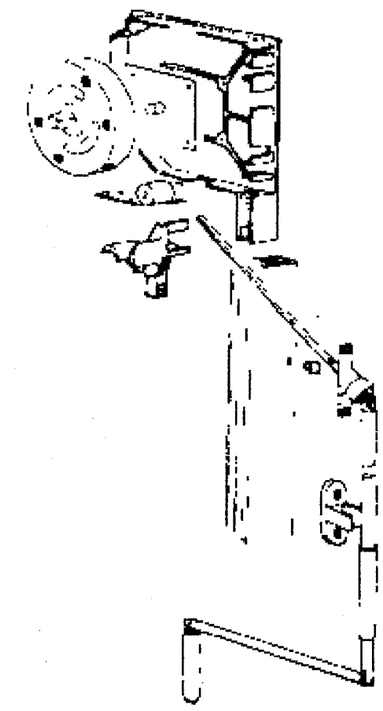

ALTERNATE ROLL-UP SHUTTER LIFTING MECHANISMS

PRODUCT REVISED
as complying with the Florida Building Code
Acceptance No 05-0929.04
Expiration Date JUNE 07, 2009
By Ishaq I. Chanda
Miami Dade Product Control Division

F.B.C. (HIGH VELOCITY HURRICANE ZONE)

9/9/07

TILTECO INC.
TILLIT TESTING & ENGINEERING COMPANY
6355 N.W. 36th. St., Ste.305 – VIRGINIA GARDENS, Fl. 33166
Phone : (305)871-1530 . Fax : (305)871-1531
EB-0006719
WALTER A. TILLIT Jr., P. E.
FLORIDA Lic. # 44167

40mm SLAT ROLL-UP SHUTTER

ROLLINGSHIELD, INC.
(N.S.A.# 1)
2500 N.W. 74th AVENUE
MIAMI, FLORIDA 33122
Phone : (305)436-6661 . Fax : (305)436-5523

REV. No	DESCRIPTION	DATE	REV. No	DESCRIPTION	DATE
1	OLD 02-536	08/9/05	3	GENERAL	3/30/07
2	ASSOCIATION NUMBER	4/14/06	4		

DRAWN BY: L.G.
08/9/05 DATE
05-216 DRAWING No
SHEET 3A OF 16

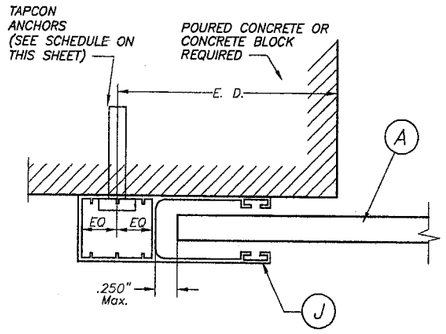

SECTION P – P (1) : WALL MOUNT

SCALE: 1/2" = 1"

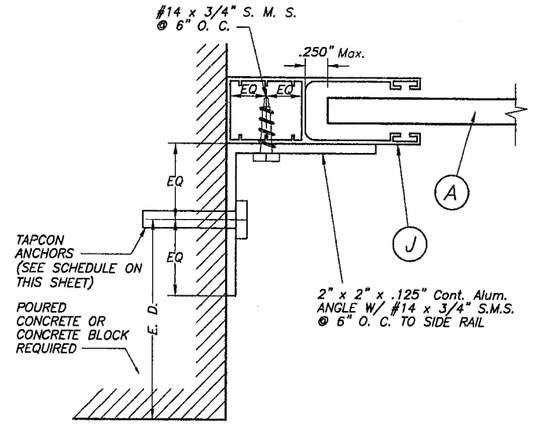

SECTION P – P (2) : INSIDE MOUNT

SCALE: 1/2" = 1"

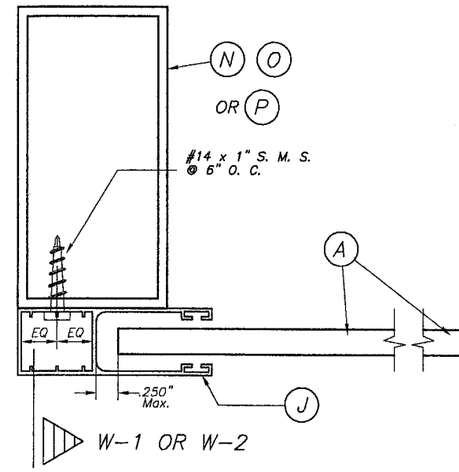

SECTION Q – Q : MULLION MOUNT (FACE MOUNT)

SCALE: 1/2" = 1"

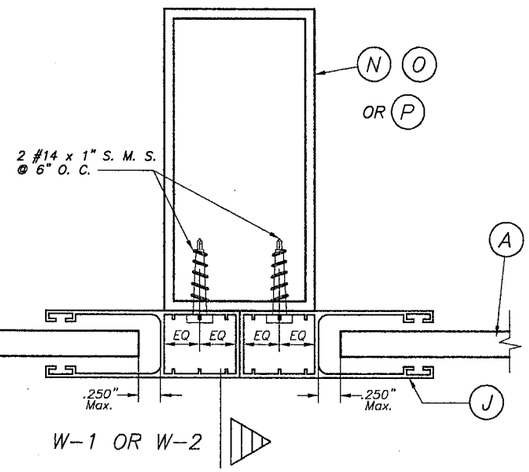

SECTION R – R : MULLION MOUNT (FACE MOUNT)

SCALE: 1/2" = 1"

SIDE RAIL ANCHOR SCHEDULE

MAXIMUM DESIGN PRESSURE RATING "W" (p. s. f.) AND CORRESPONDING MAXIMUM ANCHOR SPACING(in)* FOR SIDE RAILS (J) CONNECTION TO POURED CONCRETE OR MASONRY WALL

(USE MAXIMUM VALUES BETWEEN POSITIVE AND NEGATIVE LOAD)

MAXIMUM DESIGN LOAD "W" (p.s.f.)	SIDE RAIL (J)		
	WALL MOUNT	INSIDE MOUNT	BUILD-OUT MOUNT
80.0 OR LESS	6"	6"	6"
	6"	6"	6"
>80.0 TO 150.0	5"	5"	6"
	6"	6"	6"
>150.0 TO 160.0	5"	5"	6"
	6"	6"	6"

MASONRY
POURED CONCRETE

SUBSTRATE LEGEND

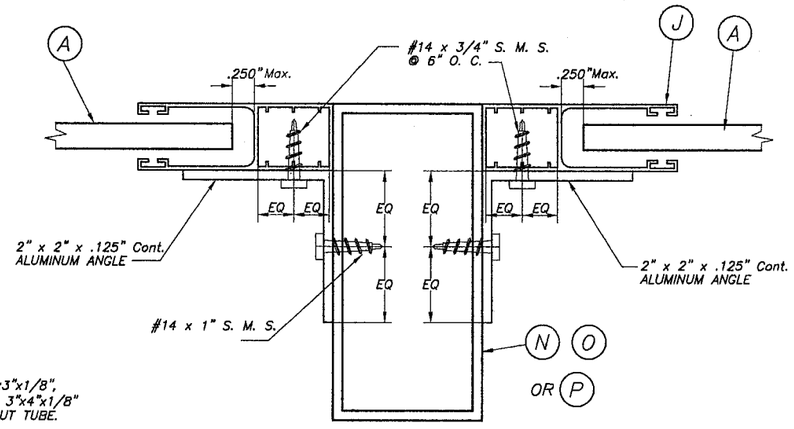

SECTION R – R : MULLION MOUNT (INSIDE MOUNT)

SCALE: 1/2" = 1"

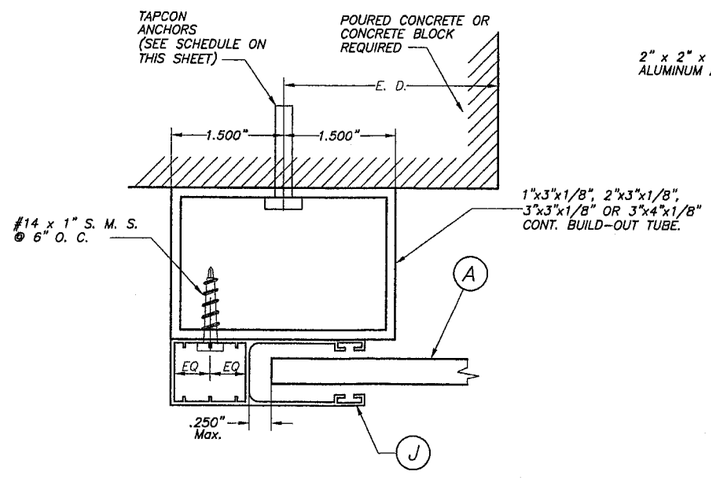

SECTION P – P (3) : BUILD-OUT MOUNT

SCALE: 1/2" = 1"

* MAXIMUM ANCHOR SPACING (in.) AT SIDE RAILS VERSUS EDGE DISTANCE = E. D.

+ MAXIMUM ANCHOR SPACING ARE VALID FOR 3 1/2" EDGE DISTANCE. FOR E. D. LESS THAN 3 1/2", REDUCE ANCHOR SPACING BY MULTIPLYING SPACING SHOWN ON SCHEDULE BY THE FOLLOWING FACTORS (REDUCED SPACING OBTAINED USING FACTORS SHALL NOT BE LESS THAN 3"):

ACTUAL E. D.	FACTOR
3"	.86
2 1/2"	.75
2"	.50

PRODUCT REVISED
as complying with the Florida Building Code
Acceptance No 05-0929.04
Expiration Date JUNE 07, 2007
By Ishag I. Chanda
Miami Dade Product Control Division

F.B.C. (HIGH VELOCITY HURRICANE ZONE)

4/9/07

TILTECO INC.
TILLIT TESTING & ENGINEERING COMPANY
6355 N.W. 36th. St., Ste.305 – VIRGINIA GARDENS, Fl. 33166
Phone : (305)871-1530 . Fax : (305)871-1531
EB-0006719
WALTER A. TILLIT Jr., P. E.
FLORIDA Lic. # 44167

40mm SLAT ROLL-UP SHUTTER

ROLLINGSHIELD, INC.
(N.S.A.# 1)
2500 N.W. 74th AVENUE
MIAMI, FLORIDA 33122
Phone : (305)436-6661 . Fax : (305)436-5523

REV. No	DESCRIPTION	DATE	REV. No	DESCRIPTION	DATE
1	OLD 02-536	08/9/05	3	GENERAL	3/30/07
2	ASSOCIATION NUMBER	4/14/06	4		

DRAWN BY: L.G.

08/9/05 DATE

05-216 DRAWING No

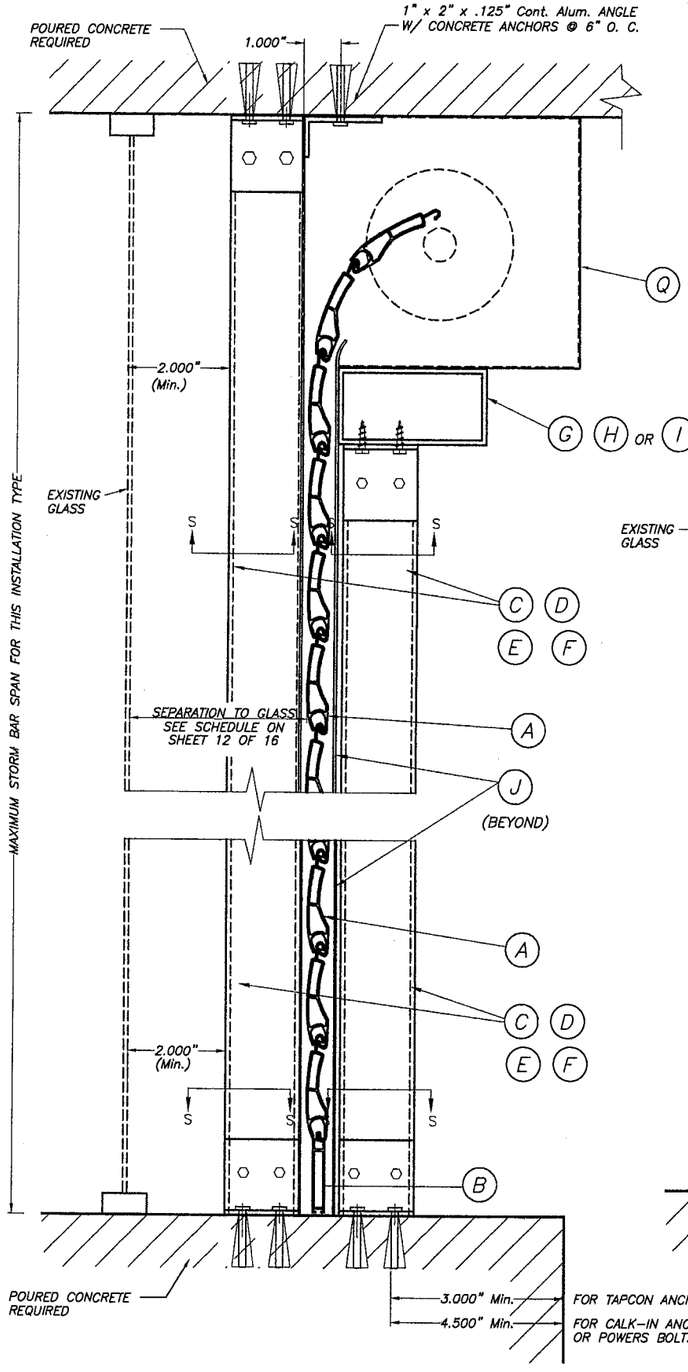

CEILING & FLOOR MOUNTING SECTION V-V-(2) INSTALLATION W/ FIXED OR REMOVABLE STORM BARS W/CONCRETE ANCHORS

(SEE SECTION "S" FOR ANCHOR TYPE REQUIREMENT)

SCALE : 1/4" = 1"

SINGLE SPAN SECTIONS AND DETAILS ARE SIMILAR TO ABOVE SHOWN WITHOUT STORM BAR & HEADERS.

SECTIONS V – V

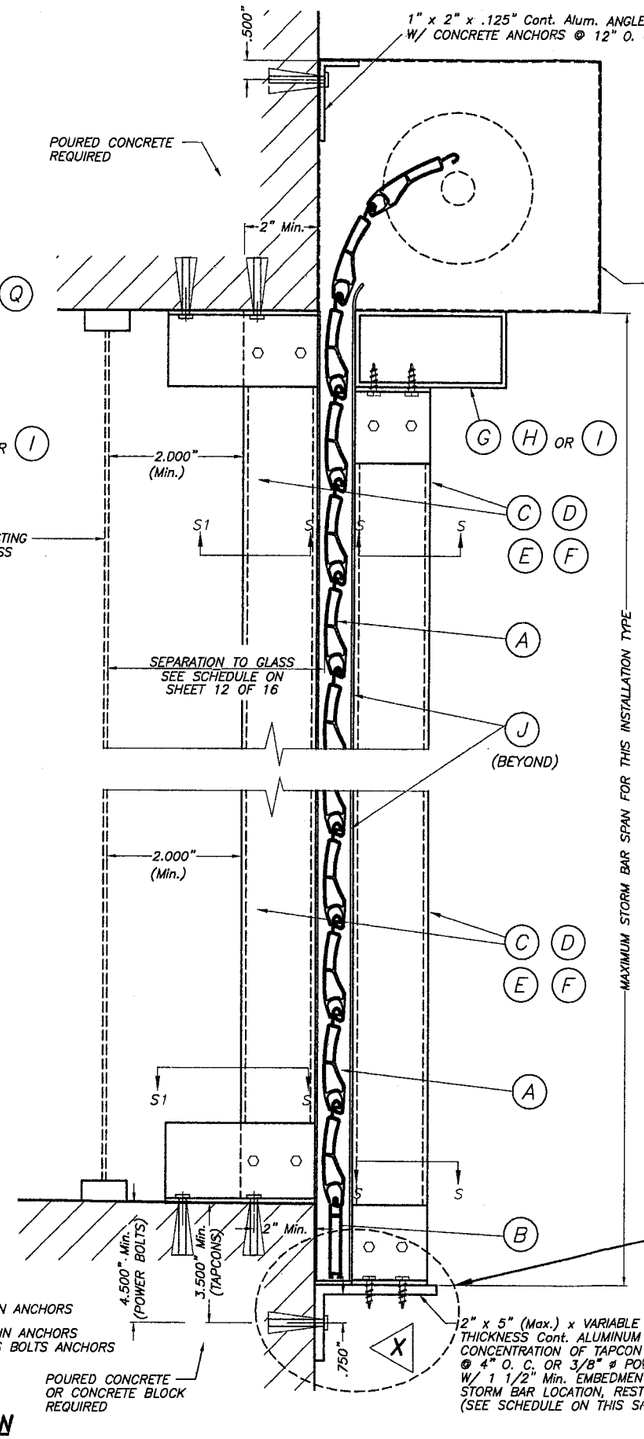

WALL MOUNTING SECTION V-V(1) INSTALLATION W/ FIXED STORM BARS W/ CONCRETE ANCHORS

SCALE : 1/4" = 1"

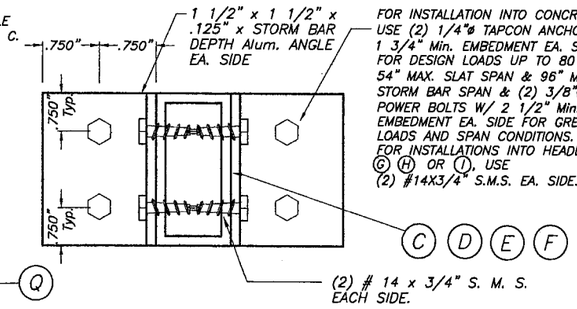

SECTION S – S (FOR FIXED STORM BAR)

SCALE : 1/2" = 1"

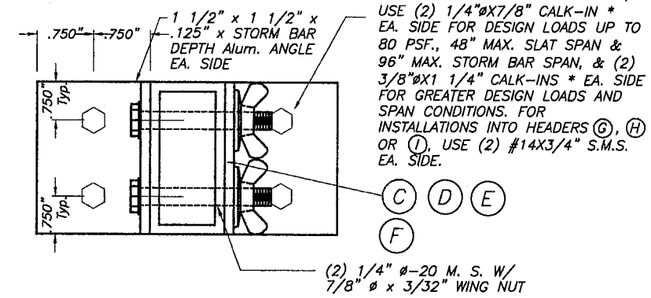

SECTION S – S (FOR REMOVABLE STORM BAR)

SCALE : 1/2" = 1"

ANCHOR & ANGLE SCHEDULE FOR ELEVATION X		
DESIGN LOAD (psf)	ANCHOR TYPE & QUANTITY	ANGLE THICKNESS
72.0 OR LESS **	(6) 1/4" ø TAPCONS	1/8"
160 OR LESS	(4) 3/8" ø POWERS BOLTS	1/4"

** W/ 4'-0" Max. SLAT SPAN & 8'-0" MAX. STORM BAR SPAN

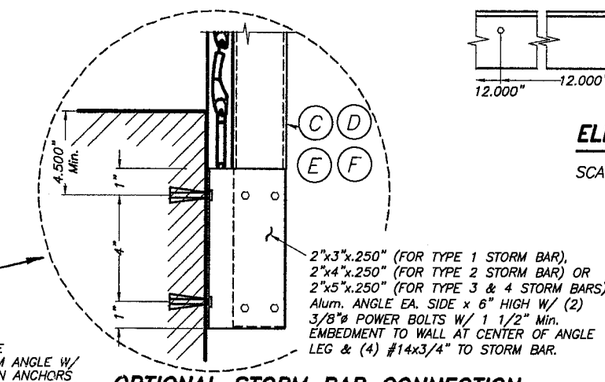

OPTIONAL STORM BAR CONNECTION

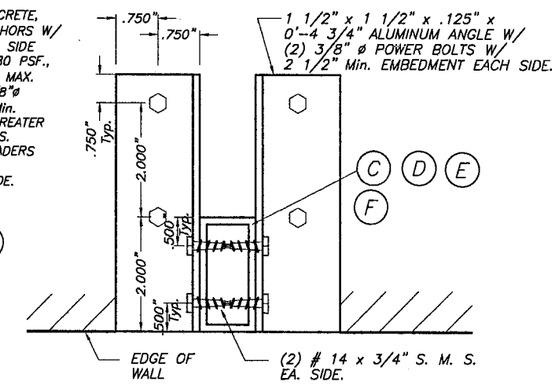

SECTION S1 – S1

SCALE : 1/4" = 1"

* 1/4" ø-20 OR 3/8" ø-16 MACHINE SCREWS USED JOINTLY W/ 1/4" ø x 7/8" OR 3/8" ø x 1 1/4" CALK-IN ANCHORS RESPECTIVELY SHALL BE LEFT TOGETHER W/ ANCHORS AT THE TIME STORM BARS ARE REMOVED. (SEE DET. A).

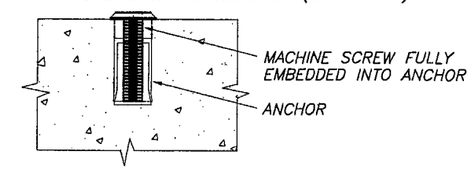

DETAIL A

SCALE : 1/2" = 1"

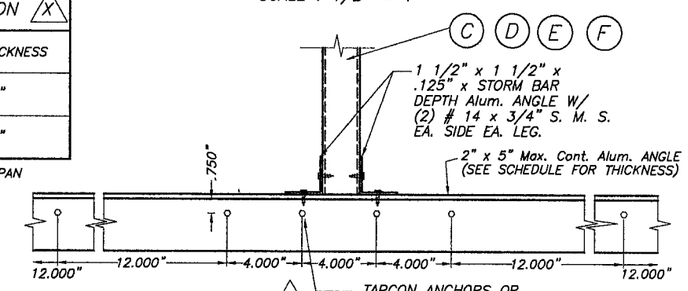

ELEVATION X

SCALE : 1/8" = 1"

PRODUCT REVISED
as complying with the Florida Building Code
Acceptance No 05-0929.04
Expiration Date JUNE 07, 2009
By Ishaq I. Chanda
Miami Dade Product Control Division

F.B.C. (HIGH VELOCITY HURRICANE ZONE)

TILTECO INC.
TILLIT TESTING & ENGINEERING COMPANY
6355 N.W. 36th. St., Sta.305 – VIRGINIA GARDENS, Fl. 33166
Phone : (305)871-1530 . Fax : (305)871-1531
EB-0006719
WALTER A. TILLIT Jr., P. E.
FLORIDA Lic. # 44167

9/9/07

40mm SLAT ROLL-UP SHUTTER

ROLLINGSHIELD, INC.
(N.S.A.# 1)
2500 N.W. 74th AVENUE
MIAMI, FLORIDA 33122
Phone : (305)436-6661 . Fax : (305)436-5523

REV. No	DESCRIPTION	DATE	REV. No	DESCRIPTION	DATE
1	OLD 02-536	08/9/05	3	GENERAL	3/30/07
2	ASSOCIATION NUMBER	4/14/06	4		

DRAWN BY: L.G.
08/9/05 DATE
05-216 DRAWING No
SHEET 5 OF 16

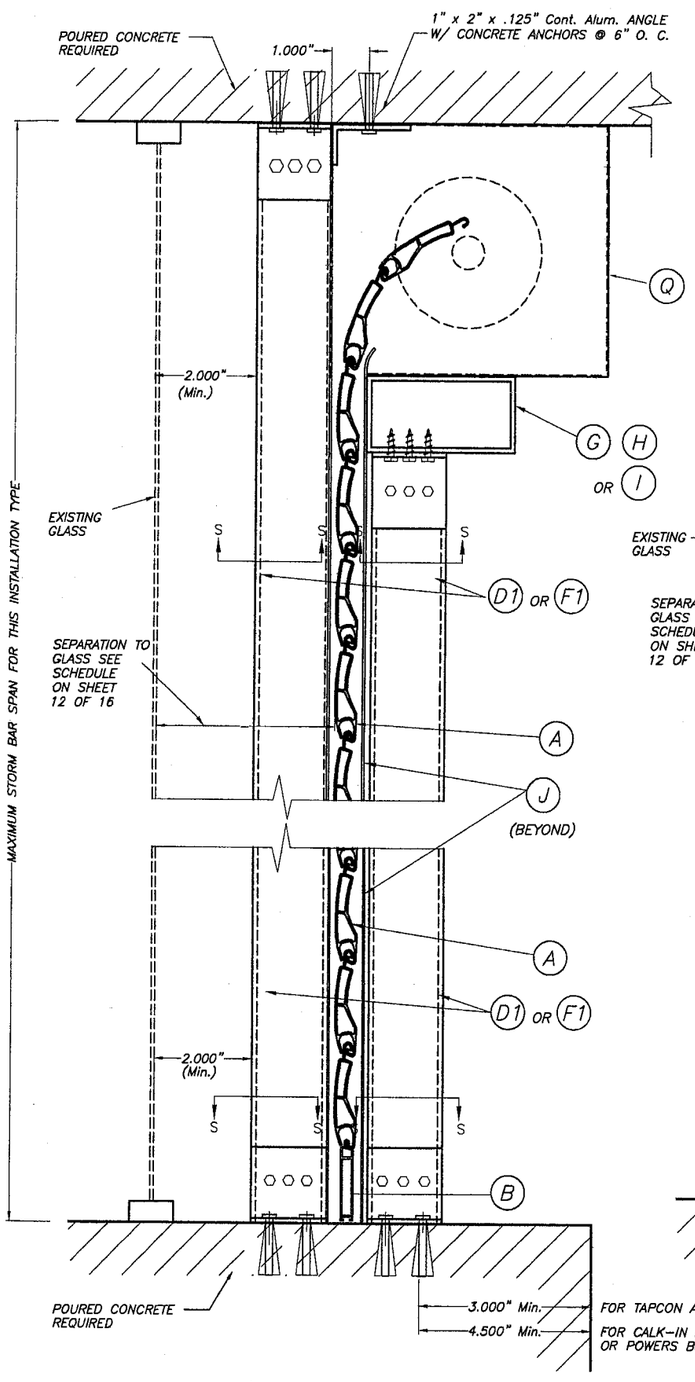

CEILING & FLOOR MOUNTING SECTION V-V(2) INSTALLATION W/ FIXED OR REMOVABLE STORM BARS W/ CONCRETE ANCHORS

(SEE SECTION "S" FOR ANCHOR TYPE REQUIREMENT)

SCALE : 1/4" = 1"

SINGLE SPAN SECTIONS AND DETAILS ARE SIMILAR TO ABOVE SHOWN WITHOUT STORM BAR & HEADERS.

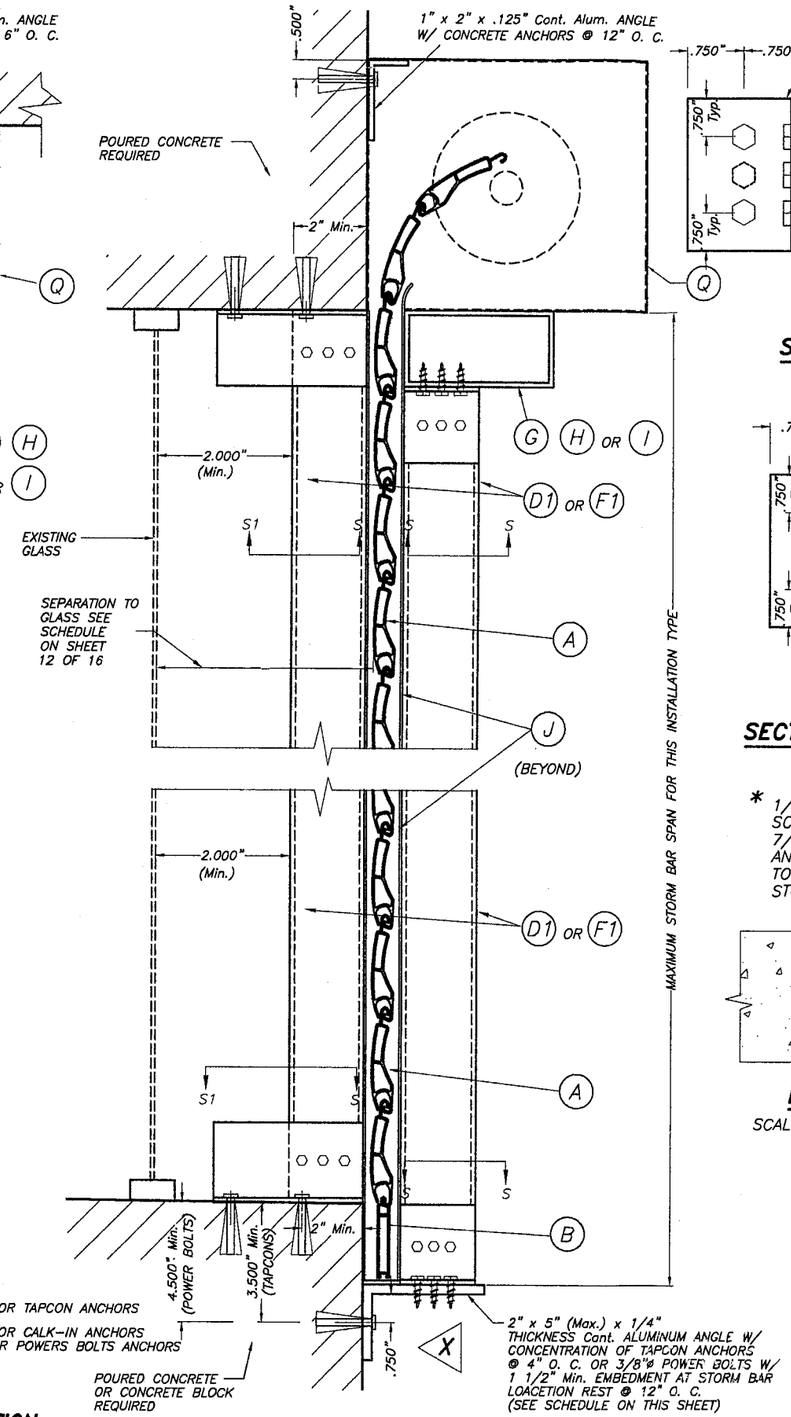

WALL MOUNTING SECTION V-V(1) INSTALLATION W/ FIXED STORM BARS W/ CONCRETE ANCHORS

SCALE : 1/4" = 1"

SECTIONS V - V

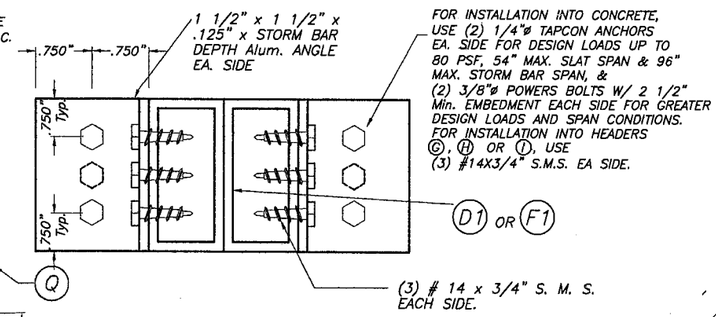

SECTION S - S (FOR FIXED STORM BAR)

SCALE : 1/2" = 1"

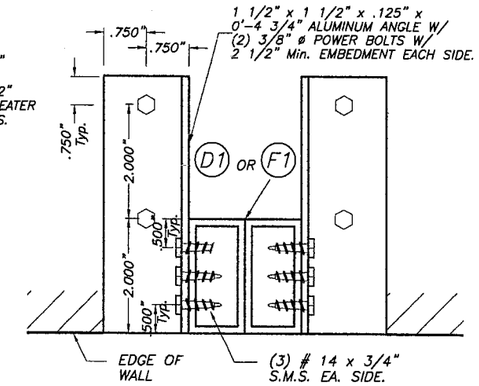

SECTION S1 - S1

SCALE : 1/4" = 1"

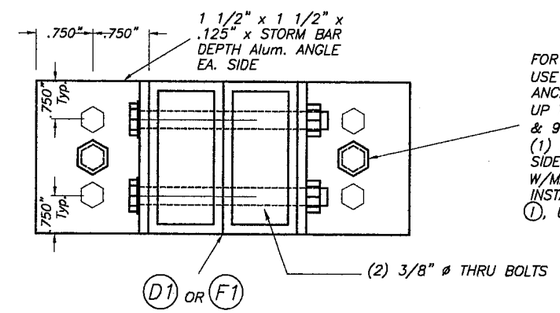

FOR INSTALLATION INTO CONCRETE USE (2) 1/4"øX7/8" CALK-IN * ANCHORS EA. SIDE FOR DESIGN LOADS UP TO 80 PSF., 48" MAX. SLAT SPAN & 96" MAX. STORM BAR SPAN, & (1) 5/8"øX2" CALK-INS * EA. SIDE FOR GREATER DESIGN LOADS AND W/MAX. SLAT SPAN OF 36". FOR INSTALLATIONS INTO HEADERS G H OR I, USE (3) #14X3/4" S.M.S. EA. SIDE.

SECTION S - S (FOR REMOVABLE STORM BAR)

SCALE : 1/2" = 1"

* 1/4" ø-20 OR 5/8" ø-20 MACHINE SCREWS USED JOINTLY W/ 1/4" ø x 7/8" OR 5/8" ø x 2" CALK-IN ANCHORS RESPECTIVELY SHALL BE LEFT TOGETHER W/ ANCHORS AT THE TIME STORM BARS ARE REMOVED. (SEE DET. A).

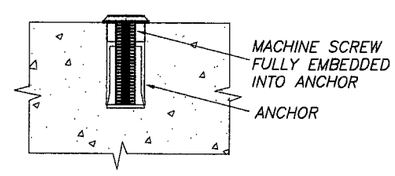

DETAIL A

SCALE : 1/2" = 1"

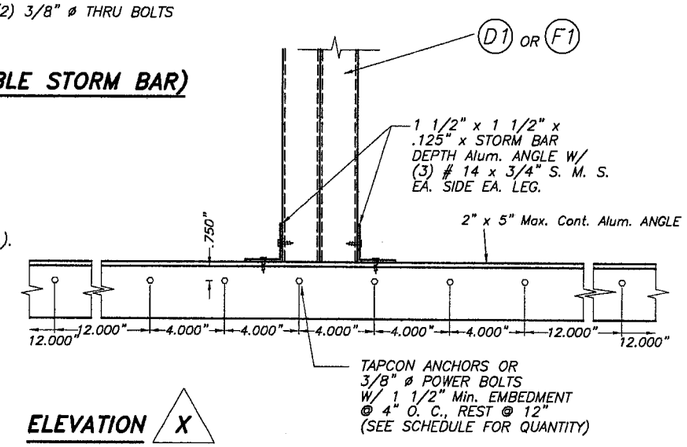

ELEVATION X

SCALE : 1/8" = 1"

ANCHOR & ANGLE SCHEDULE FOR ELEVATION X	
DESIGN LOAD (psf)	ANCHOR TYPE & QUANTITY
72.0 OR LESS **	(6) 1/4" ø TAPCONS
160 OR LESS	(6) 3/8" ø POWERS BOLTS

** W/ 4'-0" Max. SLAT SPAN & 8'-0" MAX. STORM BAR SPAN

PRODUCT REVISED
as complying with the Florida Building Code
Acceptance No 05-0929.04
Expiration Date JUNE 07, 2009
By Ishag I. Chanda
Miami Dade Product Control Division

F.B.C. (HIGH VELOCITY HURRICANE ZONE)

TILTECO INC.
TILLIT TESTING & ENGINEERING COMPANY
6355 N.W. 36th. St., Ste.305 - VIRGINIA GARDENS, Fl. 33166
Phone : (305)871-1530 . Fax : (305)871-1531
EB-0006719
WALTER A. TILLIT Jr., P. E.
FLORIDA Lic. # 44167

9/9/07

40mm SLAT ROLL-UP SHUTTER

ROLLINGSHIELD, INC.
(N.S.A.# 1)
2500 N.W. 74th AVENUE
MIAMI, FLORIDA 33122
Phone : (305)436-6661 . Fax : (305)436-5523

REV. No	DESCRIPTION	DATE	REV. No	DESCRIPTION	DATE
1	OLD 02-536	08/9/05	3	GENERAL	3/30/07
2	ASSOCIATION NUMBER	4/14/06	4		

DRAWN BY: L.G.
08/9/05 DATE
05-216 DRAWING No
SHEET 5A OF 16

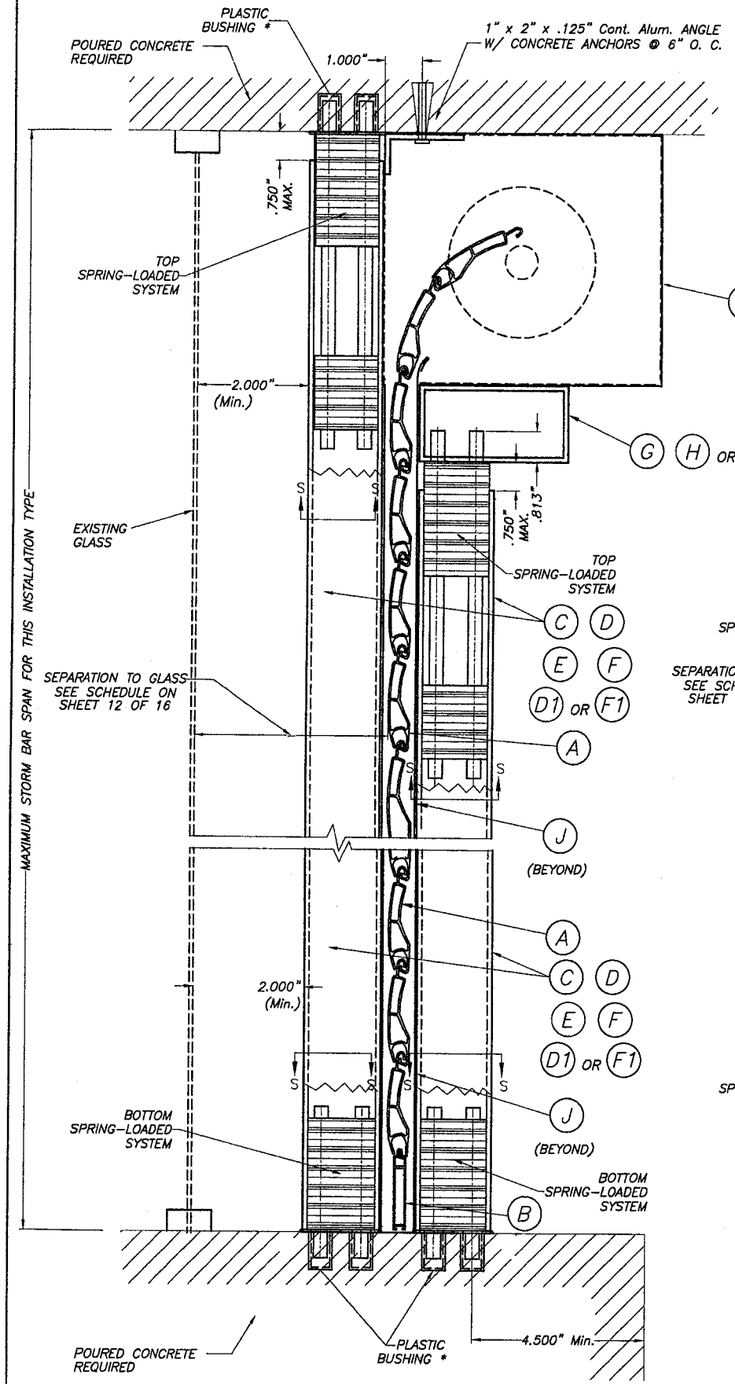

CEILING & FLOOR MOUNTING SECTION V-V(2) INSTALLATION W/ REMOVABLE STORM BARS W/SPRING-LOADED SYSTEM *

SCALE : 1/4" = 1"

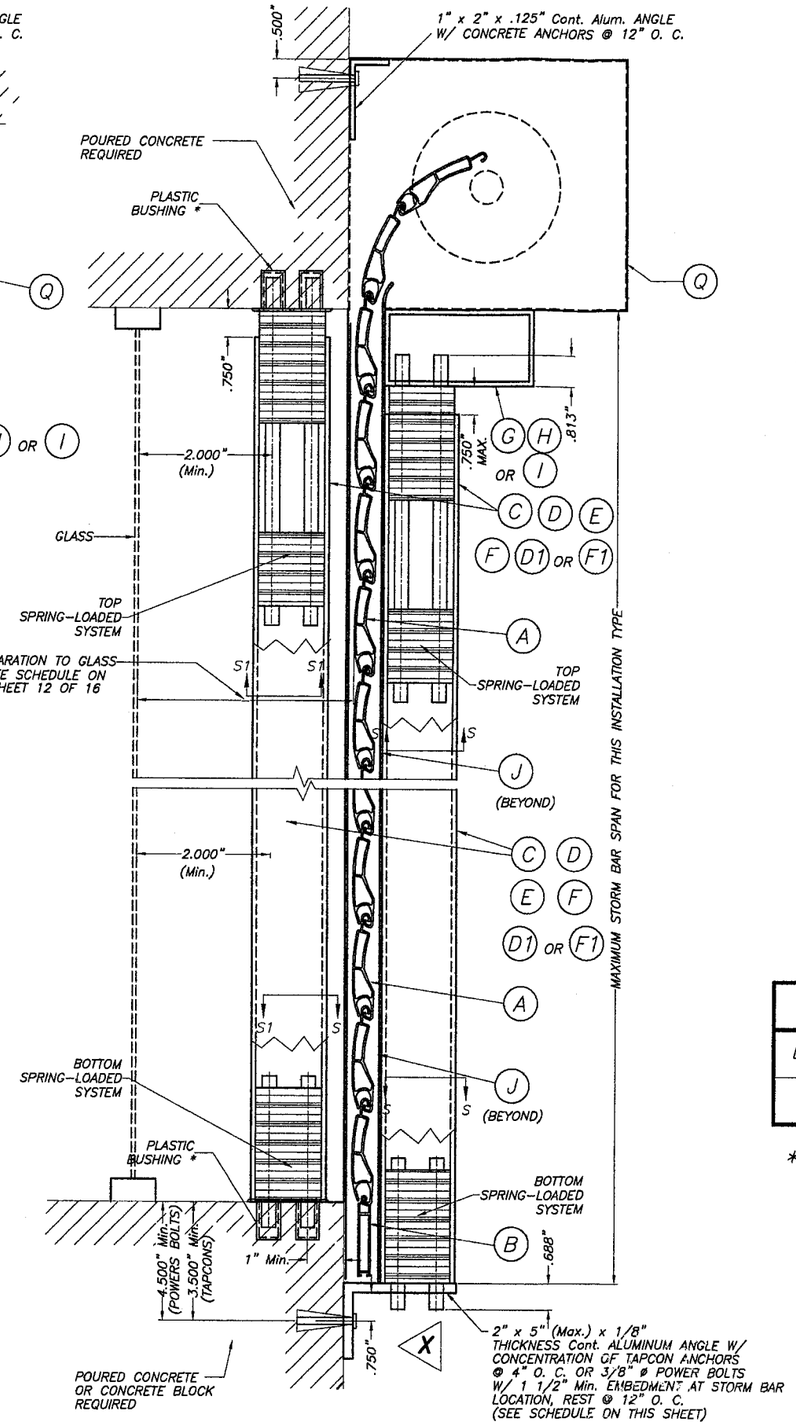

WALL MOUNTING SECTION V-V(1) INSTALLATION W/ REMOVABLE STORM BARS W/SPRING-LOADED SYSTEM *

SCALE : 1/4" = 1"

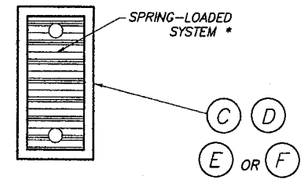

SECTION S – S : SINGLE STORM BAR

SCALE : 1/2" = 1"

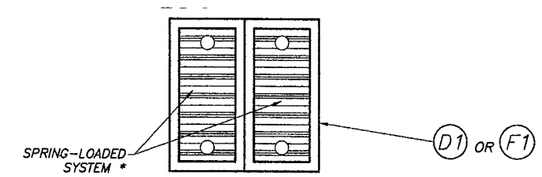

SECTION S – S : DOUBLE STORM BAR

SCALE : 1/2" = 1"

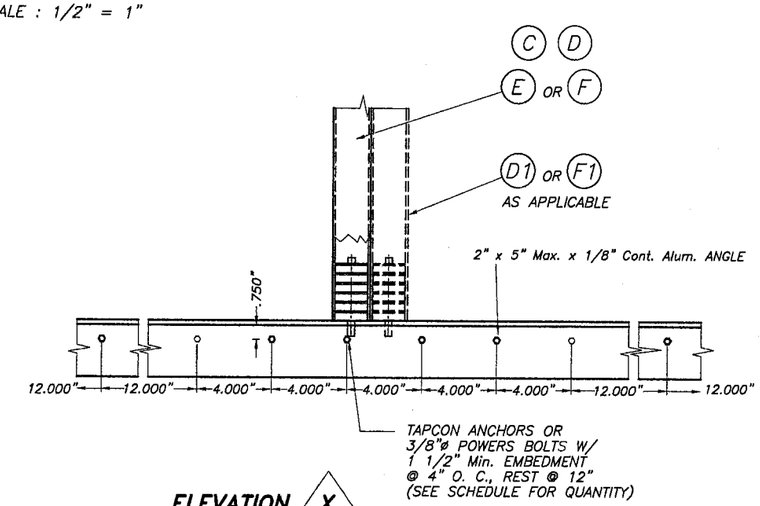

ELEVATION X

SCALE : 1/8" = 1"

ANCHOR & ANGLE SCHEDULE FOR ELEVATION X

DESIGN LOAD (psf)	ANCHOR TYPE & QUANTITY	ANGLE THICKNESS	STORM BAR TYPE
70.0 OR LESS **	(6) 1/4" ø TAPCONS	1/8"	C D E F D1 F1

** W/ 4'-0" Max. SLAT SPAN & 8'-0" MAX. STORM BAR SPAN

SECTIONS V – V

* SEE SHEET 9 OF 16 FOR SPECS. & DETAILS.

PRODUCT REVISED
as complying with the Florida Building Code
Acceptance No 05-0829.04
Expiration Date JUNE 07, 2009
By Ishaq I. Chanda
Miami Dade Product Control Division

F.B.C. (HIGH VELOCITY HURRICANE ZONE)

TILLTECO INC.
TILLIT TESTING & ENGINEERING COMPANY
6355 N.W. 36th. St., Ste.305 – VIRGINIA GARDENS, Fl. 33166
Phone : (305)871-1530 . Fax : (305)871-1531
EB-0006719
WALTER A. TILLIT Jr., P. E.
FLORIDA Lic. # 44167

9/8/07

40mm SLAT ROLL-UP SHUTTER

ROLLINGSHIELD, INC.
(N.S.A.# 1)
2500 N.W. 74th AVENUE
MIAMI, FLORIDA 33122
Phone : (305)436-6661 . Fax : (305)436-5523

REV. No	DESCRIPTION	DATE	REV. No	DESCRIPTION	DATE
1	OLD 02-536	08/9/05	3	GENERAL	3/30/07
2	ASSOCIATION NUMBER	4/14/06	4		

DRAWN BY: L.C.
08/9/05 DATE
05-216 DRAWING No
SHEET 6 OF 16

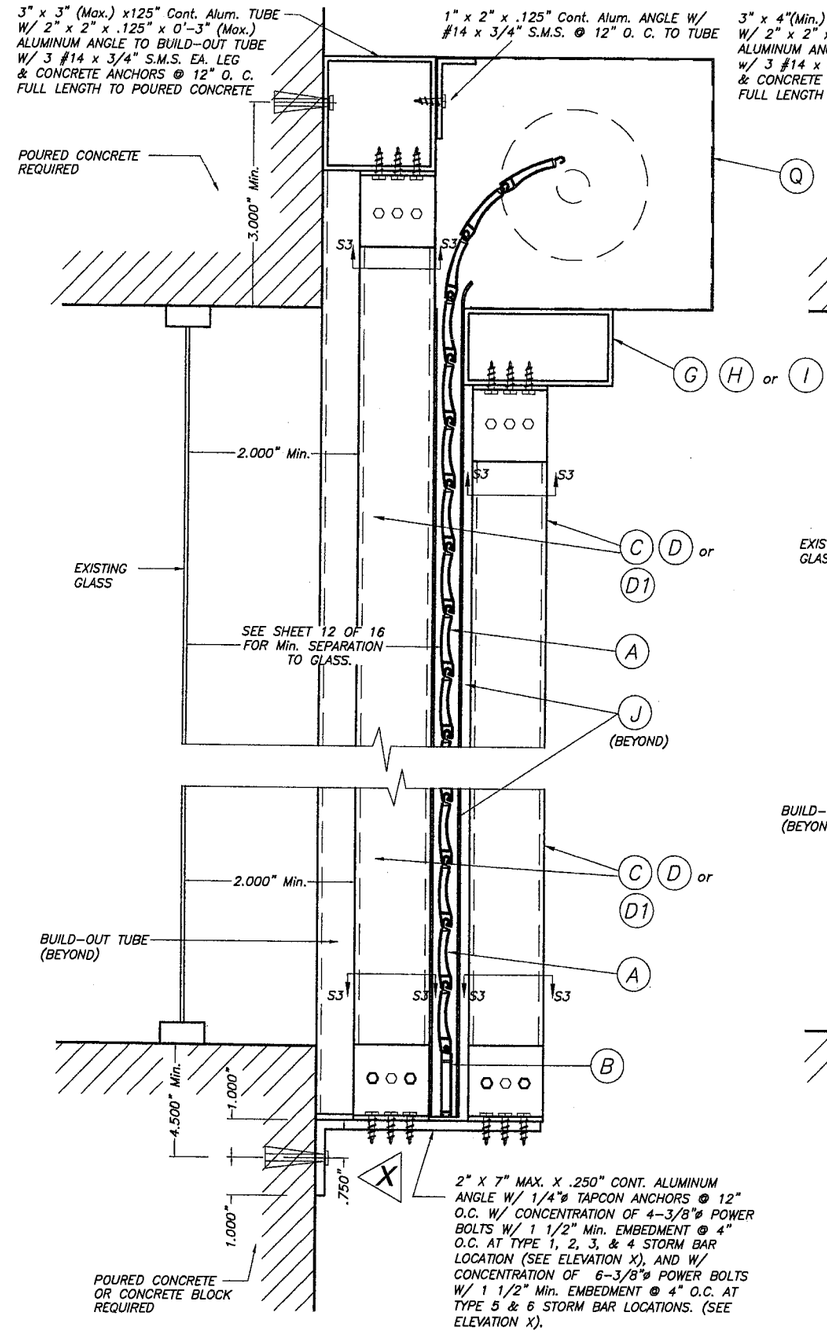

CASE I

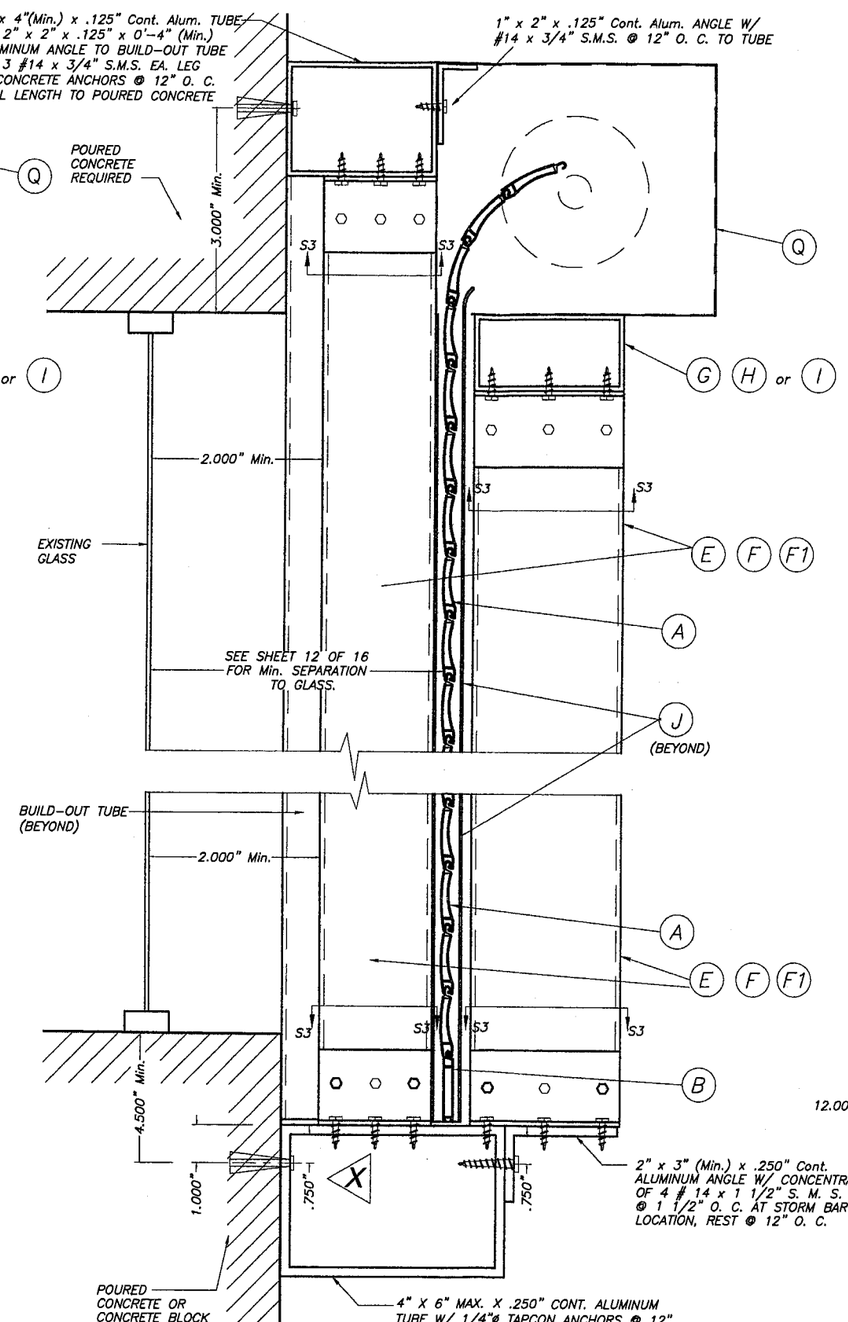

CASE II

FIXED STORM BAR CONNECTION AT BUILD-OUT INSTALLATIONS W/SHEET METAL SCREWS

SCALE : 1/4" = 1"

SECTIONS V - V

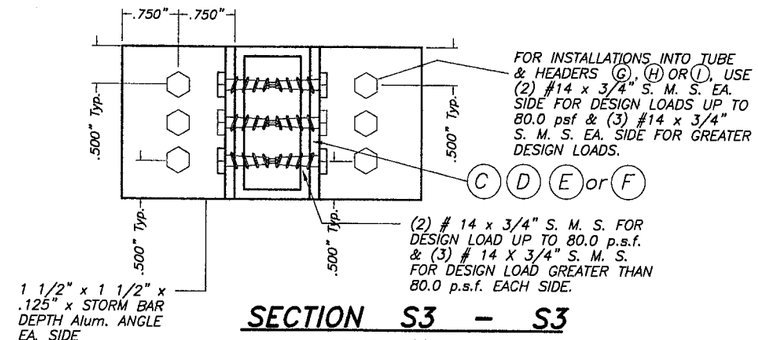

SECTION S3 - S3

SCALE : 1/2" = 1"

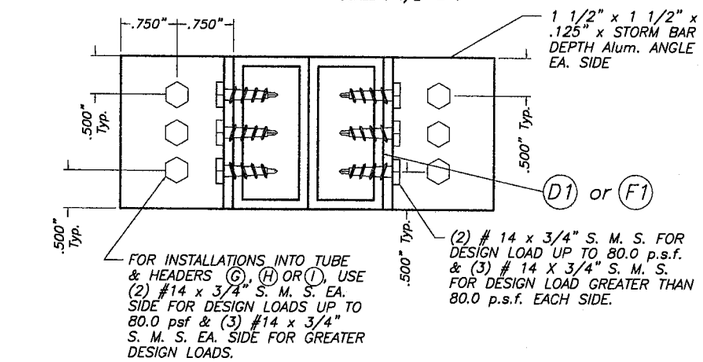

SECTION S3 - S3

SCALE : 1/2" = 1"

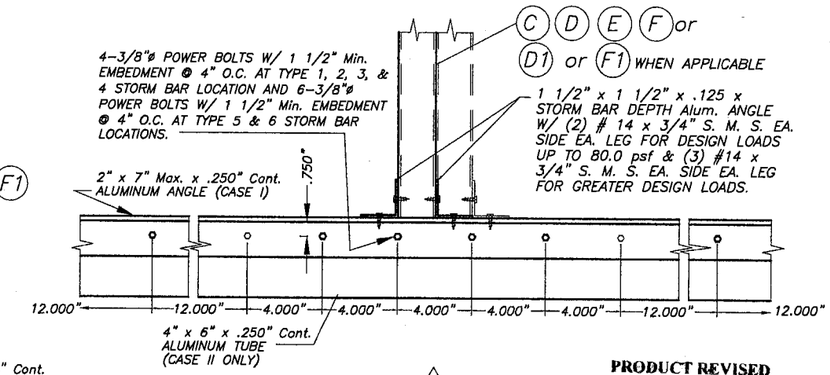

ELEVATION X

SCALE : 1/8" = 1"

PRODUCT REVISED
as complying with the Florida Buidlig Code
Acceptance No 05-0929.04
Expiration Date June 07, 2009
By Ishag I. Chanda
Miami Dade Product Control Division

NOTE:
SINGLE SPAN SECTIONS AND DETAILS ARE SIMILAR TO ABOVE SHOWN WITHOUT STORM BAR & HEADERS.

4/8/07

F.B.C. (HIGH VELOCITY HURRICANE ZONE)

TILTECO INC.
TILLIT TESTING & ENGINEERING COMPANY
6355 N.W. 36th. St., Ste.305 - VIRGINIA GARDENS, FL 33166
Phone : (305)871-1530 . Fax : (305)871-1531
EB-0006719
WALTER A. TILLIT Jr., P. E.
FLORIDA Lic. # 44167

40mm SLAT ROLL-UP SHUTTER

ROLLINGSHIELD, INC.
(N.S.A.# 1)
2500 N.W. 74th AVENUE
MIAMI, FLORIDA 33122
Phone : (305)436-6661 . Fax : (305)436-5523

REV. No	DESCRIPTION	DATE	REV. No	DESCRIPTION	DATE
1	OLD 02-536	08/9/05	3	GENERAL	3/30/07
2	ASSOCIATION NUMBER	4/14/06	4		

DRAWN BY: L.G.
08/9/05 DATE
05-216 DRAWING No
SHEET 7 OF 16

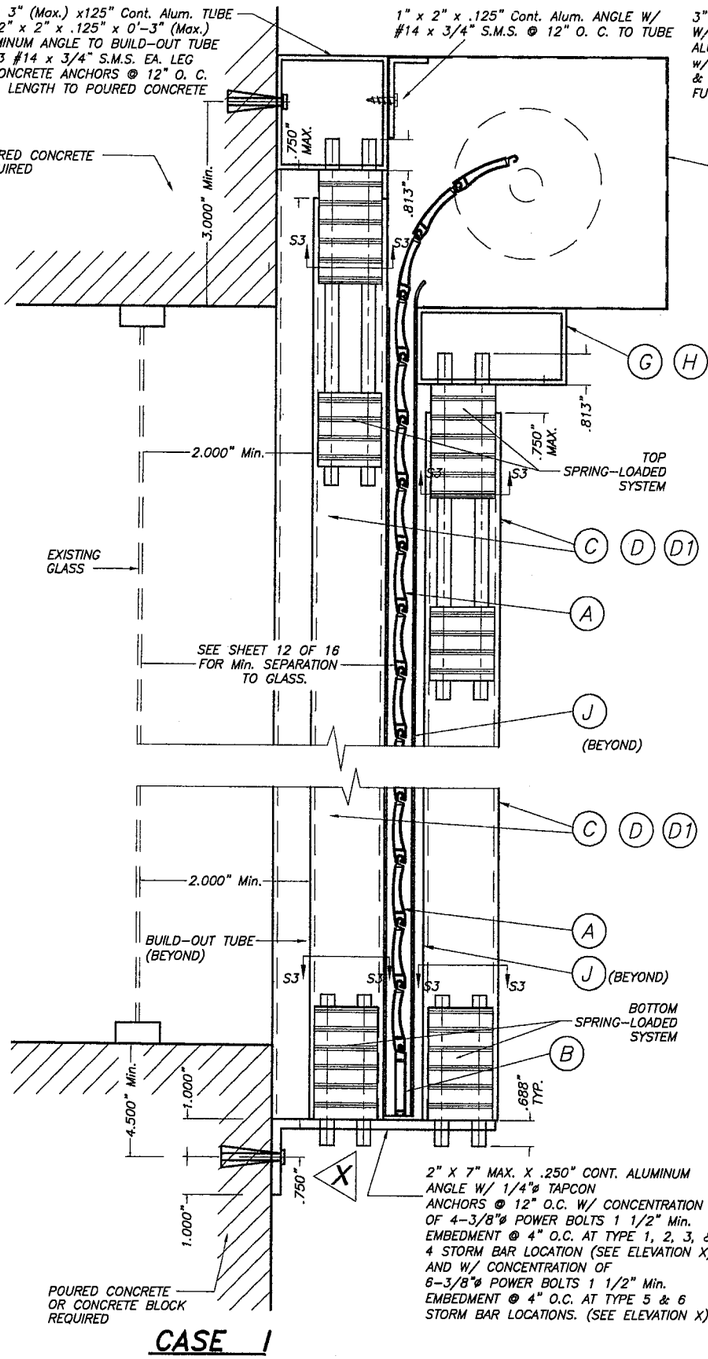

CASE I

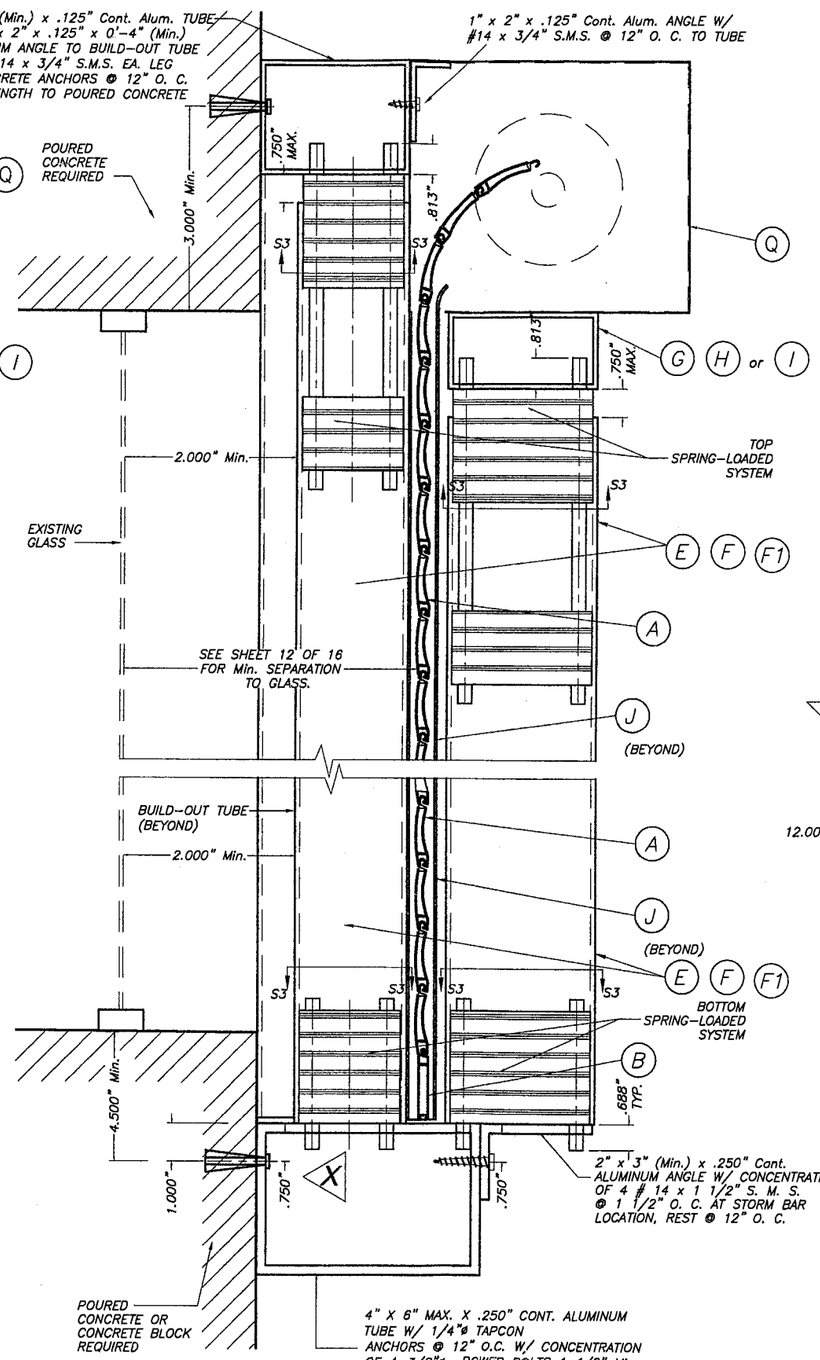

CASE II

REMOVABLE STORM BAR CONNECTION AT BUILD-OUT INSTALLATIONS W/SPRING-LOADED SYSTEM *

SCALE : 1/4" = 1"

SECTIONS V - V(3)

* SEE SHEET 9 OF 16 FOR SPECS. & DETAILS.

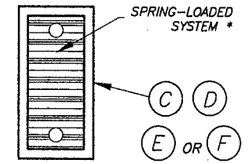

SECTION S - S : SINGLE STORM BAR

SCALE : 1/2" = 1"

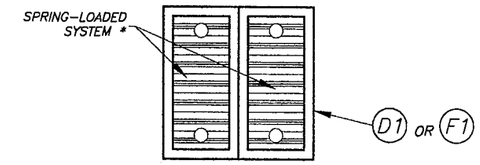

SECTION S - S : DOUBLE STORM BAR

SCALE : 1/2" = 1"

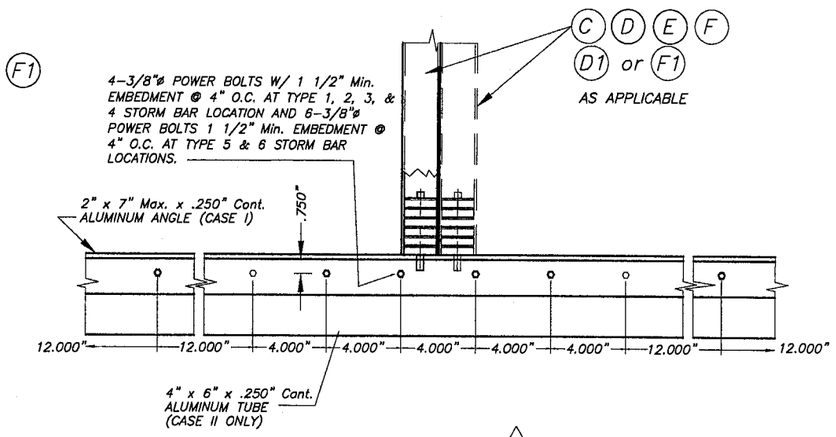

ELEVATION X

SCALE : 1/8" = 1"

PRODUCT REVISED
as complying with the Florida Building Code
Acceptance No 05-0929.04
Expiration Date JUNE 07, 2009
By Ishaq I. Chanda
Miami Dade Product Control Division

F.B.C. (HIGH VELOCITY HURRICANE ZONE)

TILTECO INC.
TILLIT TESTING & ENGINEERING COMPANY
6355 N.W. 36th. St., Ste.305 - VIRGINIA GARDENS, FL 33166
Phone : (305)871-1530 . Fax : (305)871-1531
EB-0006719
WALTER A. TILLIT Jr., P. E.
FLORIDA Lic. # 44167

4/4/07

40mm SLAT ROLL-UP SHUTTER

ROLLINGSHIELD, INC.
(N.S.A.# 1)
2500 N.W. 74th AVENUE
MIAMI, FLORIDA 33122
Phone : (305)436-6651 . Fax : (305)436-5523

REV. No	DESCRIPTION	DATE	REV. No	DESCRIPTION	DATE
1	OLD 02-536	08/9/05	3	GENERAL	3/30/07
2	ASSOCIATION NUMBER	4/14/06	4		

DRAWN BY: L.G.
08/9/05 DATE
05-216 DRAWING No
SHEET 8 OF 16

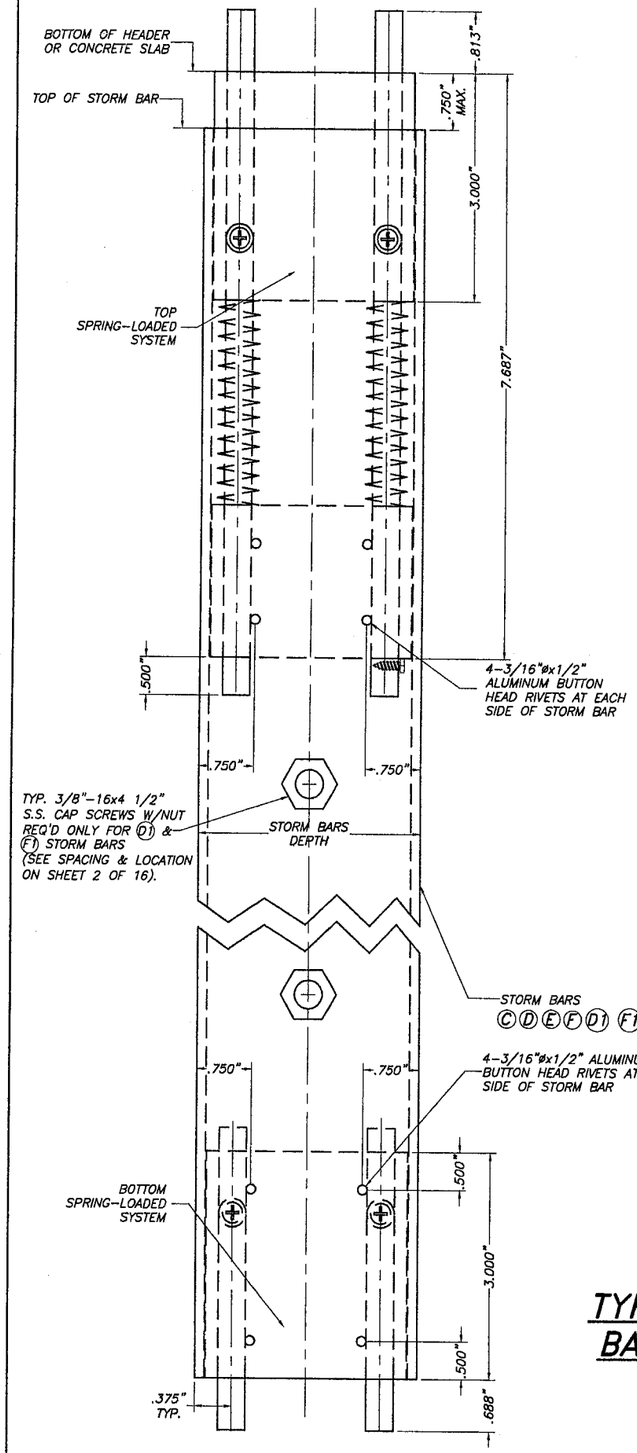

TYPICAL CONNECTION TO STORM BARS (SIDE VIEW)

SCALE: 1/2" = 1"

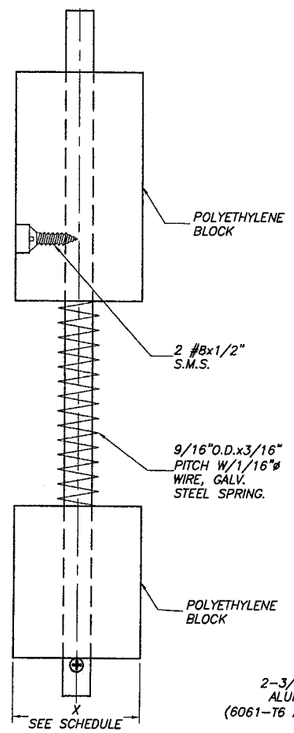

FRONT

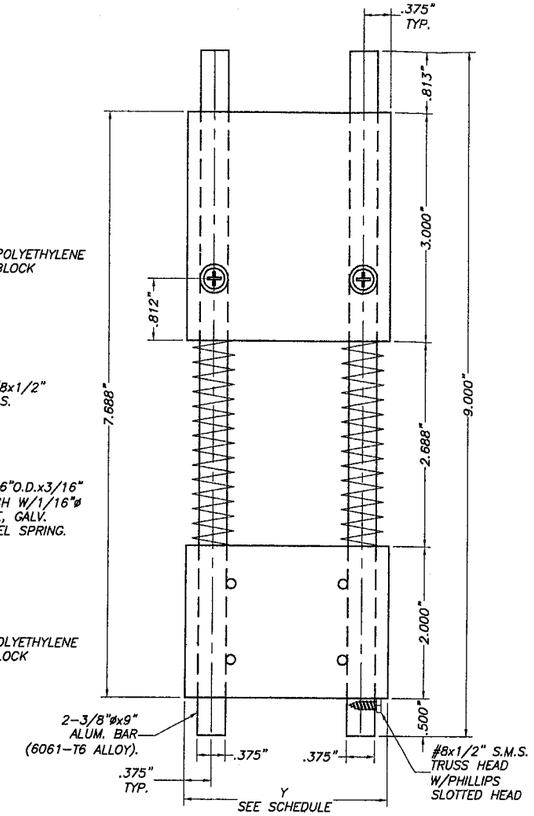

SIDE VIEW

TOP SPRING-LOADED SYSTEM

SCALE: 1/2" = 1"

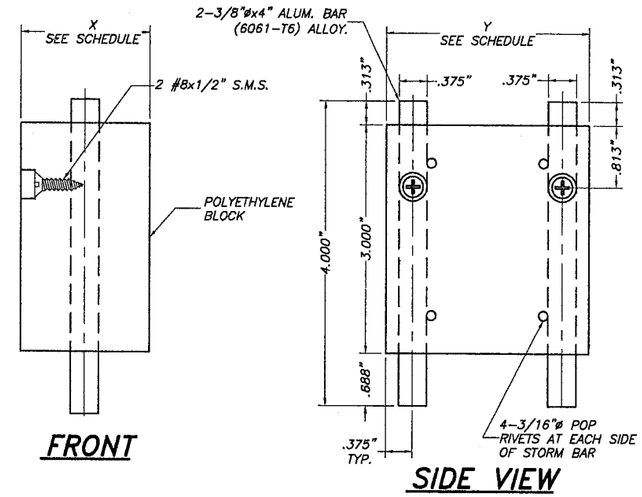

FRONT

SIDE VIEW

BOTTOM SPRING-LOADED SYSTEM

SCALE: 1/2" = 1"

X, Y DIMENSIONS FOR A GIVEN TYPE OF STORM BAR		
STORM BAR TYPE	X(in)	Y(in)
(C)	1 19/32"	1 19/32"
(D)	1 23/32"	2 23/32"
(E)	1 23/32"	3 23/32"
(F)	1 15/32"	3 15/32"
(D1)	1 23/32"	2 23/32"
(F1)	1 15/32"	3 15/32"

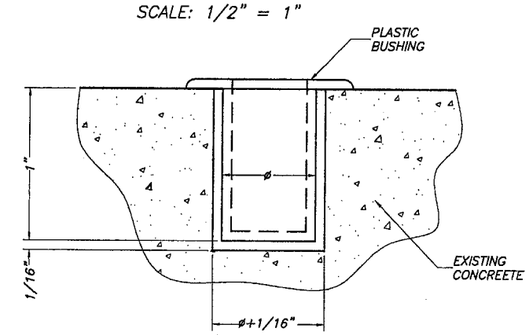

ENGAGEMENT HOLE DETAIL (IN CONCRETE) FOR REMOVABLE SPRING-LOADED STORM BARS

SCALE: 1" = 1"

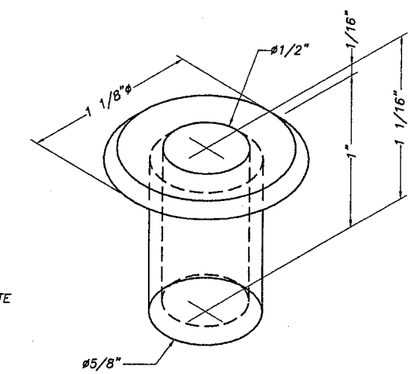

PLASTIC BUSHING: DETAIL 1(ISOMETRIC)

SCALE: 1" = 1"

NOTES:

(1) ENGAGEMENT HOLE DRILLED IN CONCRETE SHALL BE 5/8"øx1" DEEP, W/1/16" MAX. TOLERANCE IN BOTH DIAMETER & DEPTH.

(2) ENGAGEMENT HOLE DRILLED IN CONCRETE SHALL BE PERMANENTLY PROTECTED BY FITTING PLASTIC BUSHING (SEE DETAIL 1) INTO HOLE. IT SHALL BE THE RESPONSIBILITY OF SHUTTER'S OWNER TO PERMANENTLY KEEP BUSHING FREE OF DUST & MOLD BY REMOVING IT FROM ENGAGEMENT HOLE, CLEANING IT AND REPOSITIONING IT INTO HOLE AS INDICATED ON ABOVE DETAIL.

PRODUCT REVISED
as complying with the Florida Building Code
Acceptance No 05-0929.04
Expiration Date June 07, 2009
By Ishaq I. Chaude
Miami Dade Product Control Division

TYPICAL SPRING-LOADED SYSTEM FOR REMOVABLE STORM BARS AS ALTERNATE TO THE USE OF CALK-IN ANCHORS

F.B.C. (HIGH VELOCITY HURRICANE ZONE)

9/9/07

TILTECO INC.
TILLIT TESTING & ENGINEERING COMPANY
6355 N.W. 36th. St., Ste.305 - VIRGINIA GARDENS, Fl. 33166
Phone : (305)871-1530 . Fax : (305)871-1531
EB-0006719
WALTER A. TILLIT Jr., P. E.
FLORIDA Lic. # 44167

40mm SLAT ROLL-UP SHUTTER

ROLLINGSHIELD, INC.
(N.S.A.# 1)
2500 N.W. 74th AVENUE
MIAMI, FLORIDA 33122
Phone : (305)436-6661 . Fax : (305)436-5523

REV. No	DESCRIPTION	DATE	REV. No	DESCRIPTION	DATE
1	OLD 02-536	08/9/05	3	GENERAL	3/30/07
2	ASSOCIATION NUMBER	4/14/06	4		

DRAWN BY: L.G.

08/9/05 DATE

05-216 DRAWING No

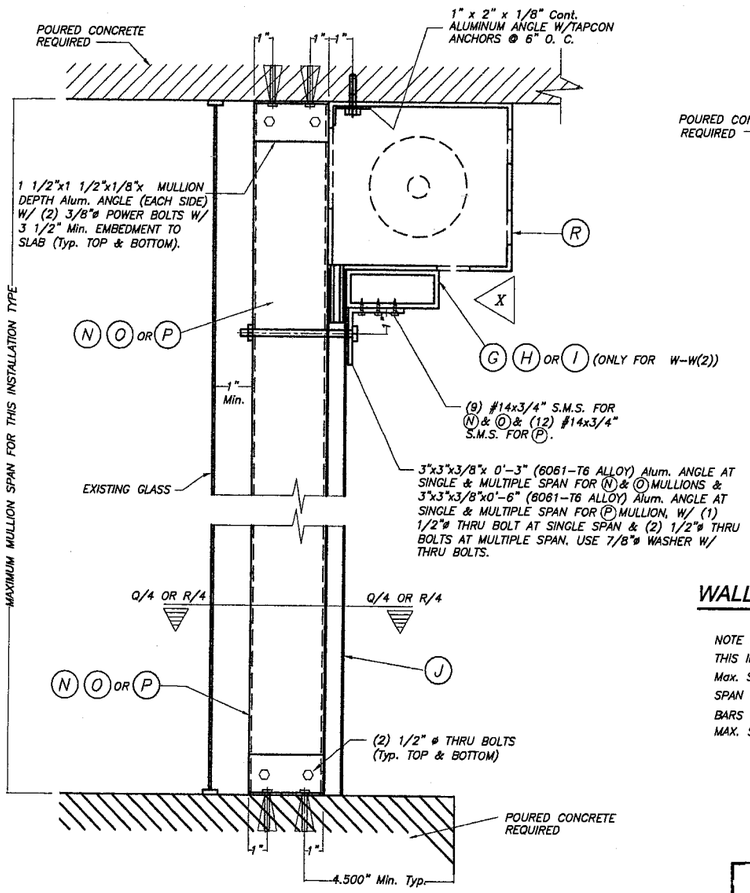

FLOOR/CEILING MOUNTING : SECTION W-W (1), W/O HEADER SECTION W-W (2), W/HEADER

SCALE : 1/8" = 1"

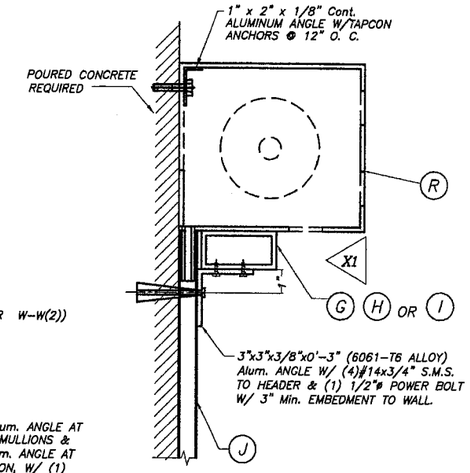

ALTERNATIVE :1 WALL MOUNTING : SECTION W-W (3)

SCALE : 1/8" = 1"

NOTE :
THIS INSTALLATION IS ONLY VALID FOR STORM BARS WITH Max. SPAN = 8'-0", HEADERS WITH 9'-0" Max. SINGLE SPAN & 80 psf MAXIMUM DESIGN LOAD OR FOR STORM BARS WITH MAX. SPAN=6'-0"; HEADERS WITH 10'-6" MAX. SINGLE SPAN & 80 p.s.f. MAXIMUM DESIGN LOAD.

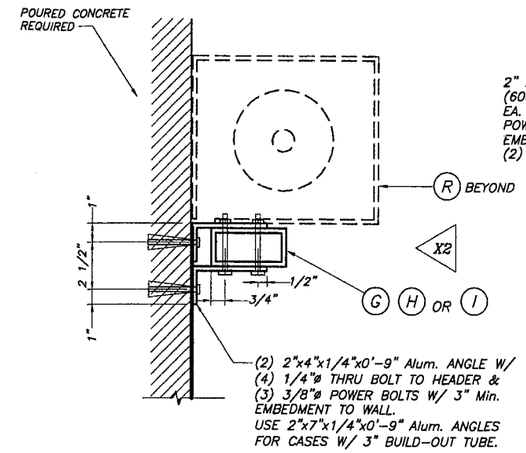

ALTERNATIVE :2 WALL MOUNTING : SECTION W-W(3)

SCALE : 1/8" = 1"

NOTE: VALID FOR ALL SPANS AND LOAD COMBINATIONS.

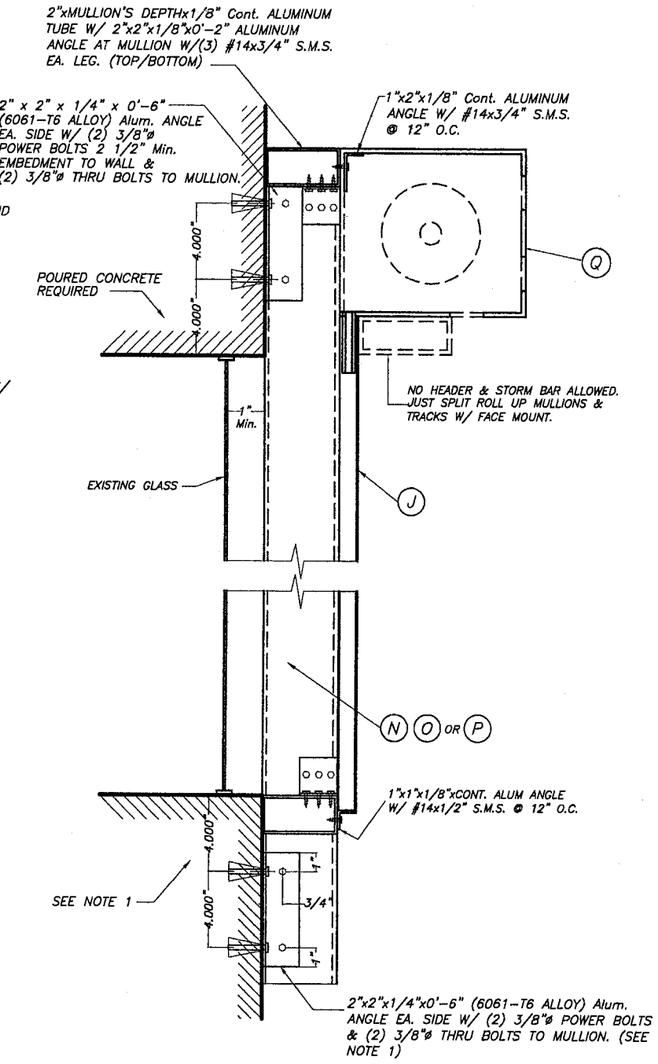

WALL MOUNTING : MULLION CONNECTION AT TOP & BOTTOM : SECTION W-W (1)

SCALE : 1/8" = 1"

NOTE 1:
EXISTING WALL MAY BE POURED CONCRETE OR CONCRETE BLOCK W/ 1 1/2" Min. ANCHOR EMBEDMENT FOR DESIGN LOADS UP TO 150.0 psf W/ 9'-5" Max. MULLION SPAN AND SHALL BE POURED CONCRETE W/ 2 1/2" Min. ANCHOR EMBEDMENT FOR ALL MULLION SPAN AND LOAD COMBINATION.

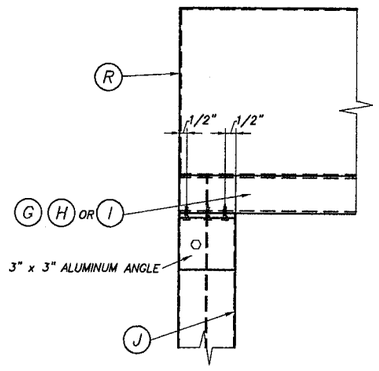

ELEVATION X1

SCALE : 1/8" = 1"

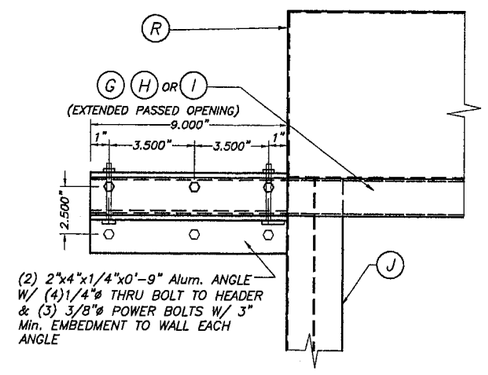

ELEVATION X2

SCALE : 1/8" = 1"

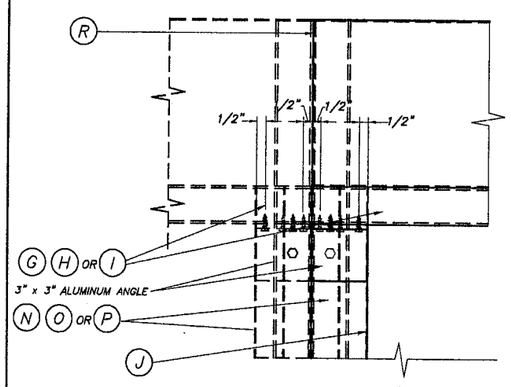

ELEVATION X

SCALE : 1/8" = 1"

TYPICAL HEADER CONNECTION AT ENDS: SECTIONS W-W

4/9/07

PRODUCT REVISED
as complying with the Florida Building Code
Acceptance No 05-0929.04
Expiration Date JUNE 07, 2009
By Ishaq I. Uhanda
Miami Dade Product Control Division

F.B.C. (HIGH VELOCITY HURRICANE ZONE)

TILTECO INC.
TILLIT TESTING & ENGINEERING COMPANY
6355 N.W. 36th. St., Ste.305 – VIRGINIA GARDENS, FL 33166
Phone : (305)871-1530 . Fax : (305)871-1531
EB-0006719
WALTER A. TILLIT Jr., P. E.
FLORIDA Lic. # 44167

40mm SLAT ROLL-UP SHUTTER

ROLLINGSHIELD, INC.
(N.S.A.# 1)
2500 N.W. 74th AVENUE
MIAMI, FLORIDA 33122
Phone : (305)436-6661 . Fax : (305)436-5523

REV. No	DESCRIPTION	DATE	REV. No	DESCRIPTION	DATE
1	OLD 02-536	08/9/05	3	GENERAL	3/30/07
2	ASSOCIATION NUMBER	4/14/06	4		

DRAWN BY: L.G.
08/9/05 DATE
05-216 DRAWING No
SHEET 10 OF 16

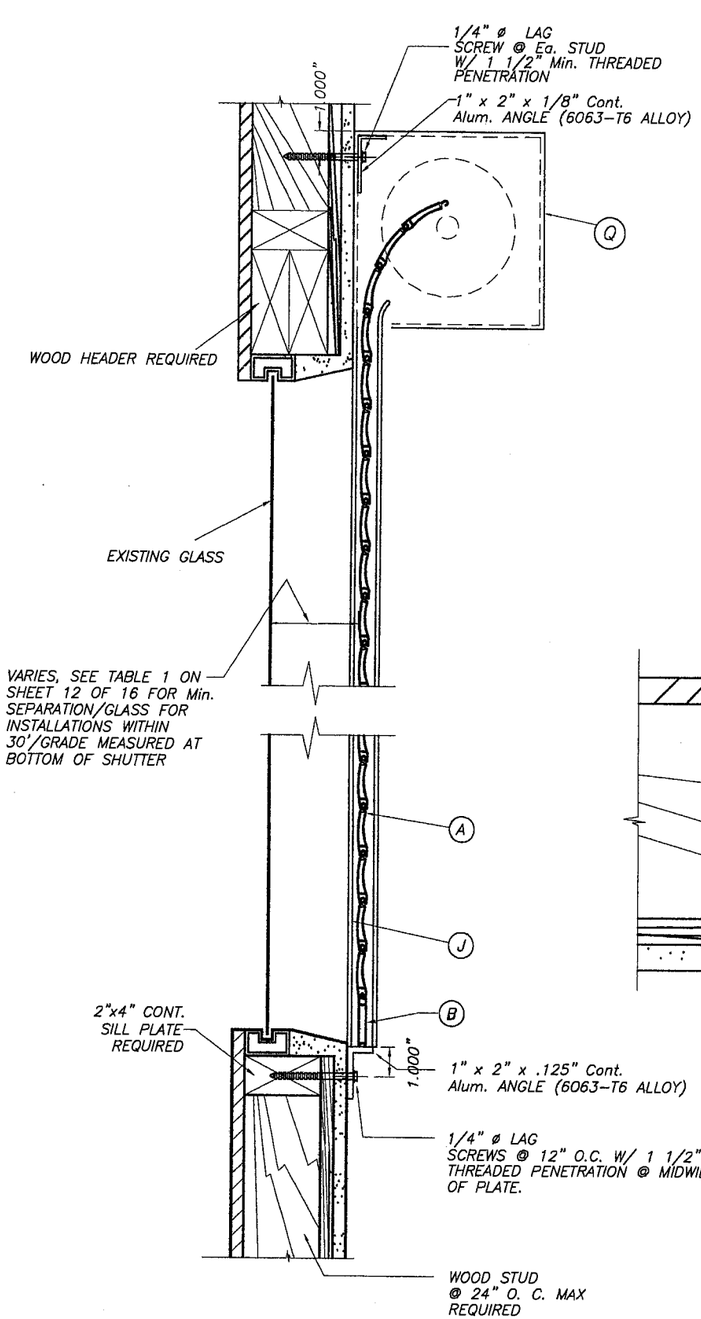

WALL MOUNTING INSTALLATION

SINGLE SPAN CONDITION

N. T. S.

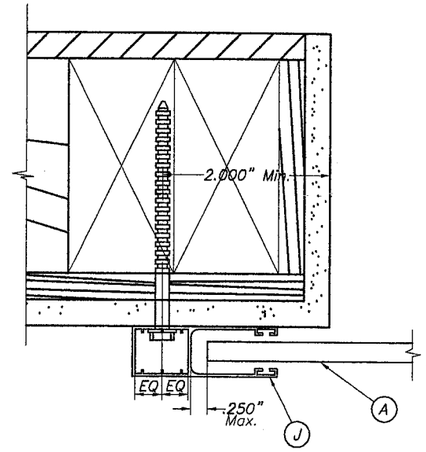

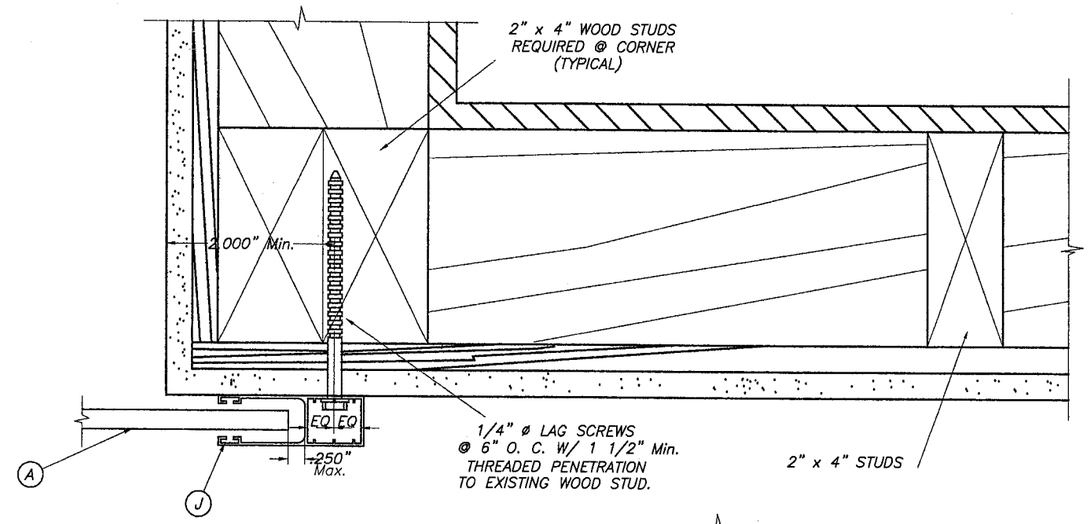

PLAN A (SECTION)

WALL MOUNT

SCALE : 3/8" = 1"

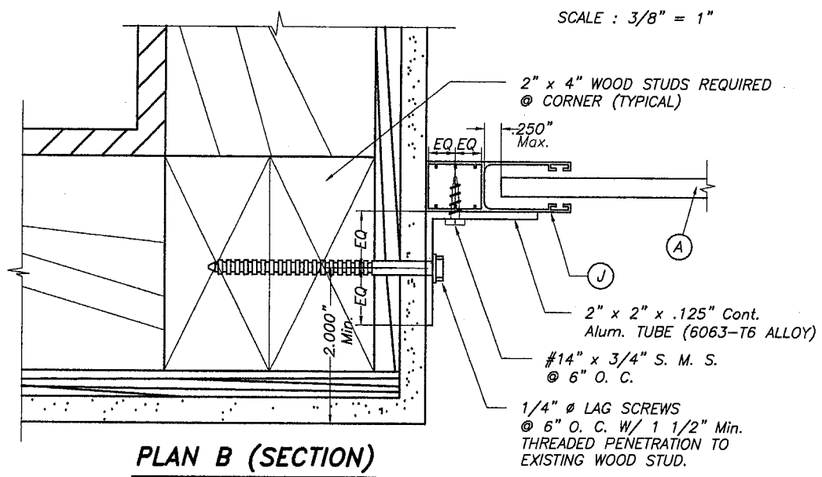

PLAN B (SECTION)

INSIDE MOUNT

SCALE : 3/8" = 1"

NOTES:

1. INSTALLATIONS ARE ONLY VALID FOR BUILDINGS WITH DESIGN LOADS UP TO 75.0 psf.
2. FOR NEW FRAME CONSTRUCTION: WOOD MEMBER TO BE SOUTHERN PINE No. 2 W/ SPECIFIC DENSITY OF 0.55 OR EQUAL.
3. MINIMUM THREADED PENETRATION OF LAG SCREWS INTO WOOD MEMBER TO BE 1 1/2".

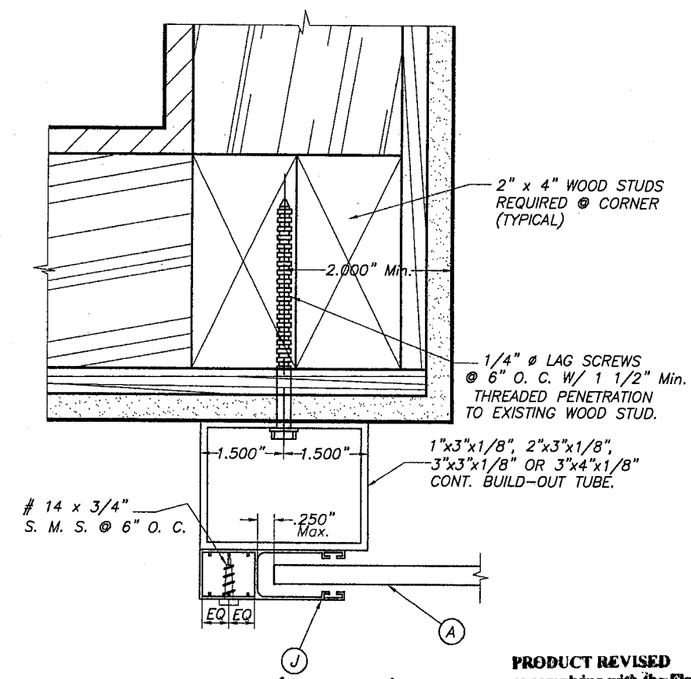

PLAN C (SECTION)

BUILD-OUT

SCALE : 3/8" = 1"

PRODUCT REVISED
as complying with the Florida Building Code
Acceptance No 05-0929.04
Expiration Date JUNE 07, 2009
By Shaq L. Chanda
Miami Dade Product Control Division

F.B.C. (HIGH VELOCITY HURRICANE ZONE)

4/9/07

TILTECO INC.
TILLIT TESTING & ENGINEERING COMPANY
6355 N.W. 36th. St., Ste.305 – VIRGINIA GARDENS, Fl. 33166
Phone : (305)871-1530 . Fax : (305)871-1531
EB-0006719
WALTER A. TILLIT Jr., P. E.
FLORIDA Lic. # 44167

40mm SLAT ROLL-UP SHUTTER

ROLLINGSHIELD, INC.
(N.S.A.# 1)
2500 N.W. 74th AVENUE
MIAMI, FLORIDA 33122
Phone : (305)436-8861 . Fax : (305)436-5523

REV. No	DESCRIPTION	DATE	REV. No	DESCRIPTION	DATE
1	OLD 02-536	08/9/05	3	GENERAL	3/30/07
2	ASSOCIATION NUMBER	4/14/06	4		

DRAWN BY: L.G.
08/9/05 DATE
05-216 DRAWING No
SHEET 11 OF 16

SLAT PERFORMANCE CHART
MAXIMUM DESIGN PRESSURE RATING "W" (p. s. f.) AND CORRESPONDING MAXIMUM SLAT SPAN "L" FOR TYPE 1 SLAT

(USE MAXIMUM VALUES BETWEEN POSITIVE AND NEGATIVES LOADS)

SLAT TYPE / Max. DESIGN LOAD "W" (p.s.f.)	MAXIMUM SLAT SPAN	MINIMUM SEPARATION TO GLASS	
	SINGLE & MULTIPLE UNIT *	SINGLE & MULTIPLE UNIT **	SINGLE & MULTIPLE UNIT ***
40.0 OR LESS	4'-0"	2 7/8"	2 5/8"
45.0	3'-10"	2 7/8"	2 5/8"
50.0	3'-9"	2 7/8"	2 5/8"
55.0	3'-7"	2 7/8"	2 5/8"
60.0	3'-6"	2 7/8"	2 5/8"
65.0	3'-5"	2 7/8"	2 5/8"
70.0	3'-4"	2 7/8"	2 5/8"
75.0	3'-3"	2 7/8"	2 5/8"
80.0	3'-2"	2 7/8"	2 5/8"
85.0	3'-1"	2 7/8"	2 5/8"
90.0	3'-1"	2 7/8"	2 5/8"
95.0	3'-0"	2 7/8"	2 5/8"
100.0	2'-11"	2 7/8"	2 5/8"
105.0	2'-11"	2 7/8"	2 5/8"
110.0	2'-10"	2 7/8"	2 5/8"
115.0	2'-10"	2 7/8"	2 5/8"
120.0	2'-9"	2 7/8"	2 5/8"
125.0	2'-9"	2 7/8"	2 5/8"
130.0	2'-8"	2 7/8"	2 5/8"
135.0	2'-8"	2 7/8"	2 5/8"
140.0	2'-7"	2 7/8"	2 5/8"
145.0	2'-7"	2 7/8"	2 5/8"
150.0	2'-7"	2 7/8"	2 5/8"
155.0	2'-6"	2 7/8"	2 5/8"
160.0	2'-6"	2 7/8"	2 5/8"

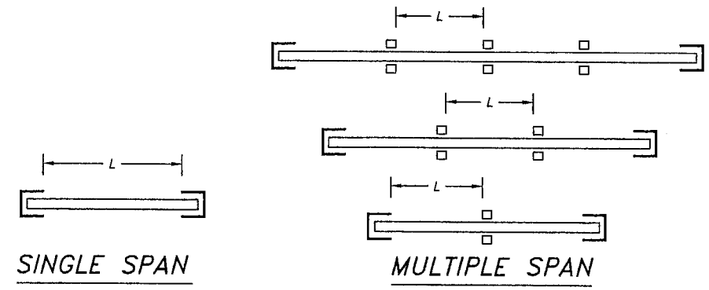

SPAN LAYOUT

* SPANS VALID FOR EVERY INSTALLATION LOCATED AT ANY ELEVATION OF BUILDING MEASURED AT BOTTOM OF SHUTTER. MINIMUM SEPARATION TO GLASS FOR SINGLE AND MULTIPLE UNITS SHALL BE MEASURED FROM BACK OF SLAT TO GLASS.

** MINIMUM SEPARATION TO GLASS FOR SHUTTERS INSTALLED WITHIN THE FIRST 30'-0" ELEVATION OF BUILDING AND MAXIMUM SPAN. SEE TABLE 1 FOR Min. SEPARATION TO GLASS FOR SPANS LESS THAN THE Max. ALLOWED.

*** MINIMUM SEPARATION TO GLASS FOR SHUTTERS INSTALLED ABOVE 30'-0" ELEVATION OF BUILDING, MEASURED AT BOTTOM OF SHUTTER.

TABLE 1:

SLAT SPAN (ft.)	MINIMUM SEPARATION TO GLASS
48" OR LESS	2 7/8"

NOTE : THE TOTAL SLAT DEFLECTION AFTER ADDING THE DEFLECTION OF THE HEADER AND/OR THE STORM BAR SHALL NOT EXCEED A MAXIMUM OF 2" OR L/30 IN THE POSITIVE DIRECTION AND A MAXIMUM OF L/30 IN THE NEGATIVE DIRECTION.

PRODUCT REVISED
as complying with the Florida Building Code
Acceptance No 05-0529.04
Expiration Date JUNE 07, 2009
By Ishay I. Chavada
Miami Dade Product Control Division

F.B.C. (HIGH VELOCITY HURRICANE ZONE)

9/9/07

TILTECO INC.
TILLIT TESTING & ENGINEERING COMPANY
6355 N.W. 36th. St., Ste.305 – VIRGINIA GARDENS, Fl. 33166
Phone : (305)871-1530 . Fax : (305)871-1531
EB-0006719
WALTER A. TILLIT Jr., P. E.
FLORIDA Lic. # 44167

40mm SLAT ROLL-UP SHUTTER

ROLLINGSHIELD, INC.
(N.S.A.# 1)
2500 N.W. 74th AVENUE
MIAMI, FLORIDA 33122
Phone : (305)436-5661 . Fax : (305)436-5523

REV. No	DESCRIPTION	DATE	REV. No	DESCRIPTION	DATE
1	OLD 02-536	08/9/05	3	GENERAL	3/30/07
2	ASSOCIATION NUMBER	4/14/06	4		

DRAWN BY: L.G.
08/9/05 DATE
05-216 DRAWING No
SHEET 12 OF 16

STORM BAR LOADING CHART

MAXIMUM DESIGN PRESSURE RATING "W" (p. s. f.) AND CORRESPONDING MAXIMUM SPAN "L" FOR A GIVEN TYPE OF STORM BAR AND STORM BAR SPACING.

(USE MAXIMUM VALUES BETWEEN POSITIVE AND NEGATIVE LOADS)

MAX. SPAN FOR STORM BARS W/REGULAR CONCRETE ANCHORS

MAXIMUM DESIGN LOAD * "W" (p.s.f.)	TYPE 1 STORM BAR 2" x 2" x .188"		TYPE 2 STORM BAR 2" x 3" x .125"		TYPE 3 STORM BAR 2" x 4" x 1/8"	
	STORM BAR SPACING		STORM BAR SPACING		STORM BAR SPACING	
	⩽ 3'-0"	3' TO 4'	⩽ 3'-0"	3' TO 4'	⩽ 3'-0"	3' TO 4'
40 OR LESS	6'-0"	6'-0"	8'-0"	7'-10"	10'-3"	9'-6"
45	6'-0"	6'-0"	8'-0"	7'-4"	9'-11"	9'-0"
50	6'-0"	6'-0"	8'-0"	7'-0"	9'-8"	8'-7"
55	6'-0"	5'-10"	7'-8"	6'-8"	9'-5"	8'-2"
60	6'-0"	5'-7"	7'-4"	6'-4"	9'-0"	7'-10"
65	6'-0"	5'-5"	7'-1"	6'-1"	8'-8"	7'-6"
70	6'-0"	5'-2"	6'-10"	5'-11"	8'-4"	7'-3"
75	5'-9"	5'-0"	6'-7"	5'-8"	8'-1"	7'-0"
80	5'-7"	4'-10"	6'-4"	5'-6"	7'-10"	6'-9"
85	5'-5"	4'-8"	6'-2"	5'-4"	7'-7"	6'-7"
90	5'-3"	4'-7"	6'-0"	5'-2"	7'-5"	6'-5"
95	5'-2"	4'-5"	5'-10"	5'-1"	7'-2"	6'-3"
100	5'-0"	4'-4"	5'-8"	4'-11"	7'-0"	6'-1"
105	4'-11"	4'-3"	5'-7"	4'-10"	6'-10"	5'-11"
110	4'-9"	4'-2"	5'-5"	4'-8"	6'-8"	5'-9"
115	4'-8"	4'-1"	5'-4"	4'-7"	6'-6"	5'-8"
120	4'-7"	4'-0"	5'-2"	4'-6"	6'-5"	5'-6"
125	4'-6"	3'-11"	5'-1"	4'-5"	6'-3"	5'-5"
130	4'-5"	3'-10"	5'-0"	4'-4"	6'-2"	5'-4"
135	4'-4"	3'-9"	4'-11"	4'-3"	6'-0"	5'-3"
140	4'-3"	3'-8"	4'-10"	4'-2"	5'-11"	5'-1"
145	4'-2"	3'-7"	4'-9"	4'-1"	5'-10"	5'-0"
150	4'-1"	3'-7"	4'-8"	4'-0"	5'-9"	4'-11"
155	4'-0"	3'-6"	4'-7"	4'-0"	5'-7"	4'-10"
160	4'-0"	3'-5"	4'-6"	3'-11"	5'-6"	4'-10"

* STORM BAR SPACING SHALL BE SUCH THAT MAXIMUM SLAT SPAN SHALL NOT BE EXCEEDED.

MAX. SPAN FOR STORM BARS W/SPRING-LOADED SYSTEM

MAXIMUM DESIGN LOAD "W" (p.s.f.)	TYPE 1 STORM BAR 2" x 2" x .188"		TYPE 2 STORM BAR 2" x 3" x .125"		TYPE 3 STORM BAR 2" x 4" x .125"	
	STORM BAR SPACING *		STORM BAR SPACING *		STORM BAR SPACING *	
	⩽ 3'-0"	3' TO 4'	⩽ 3'-0"	3' TO 4'	⩽ 3'-0"	3' TO 4'
40 OR LESS	4'-5"	3'-4"	8'-0"	6'-0"	10'-0"	7'-9"
45	3'-11"	3'-0"	7'-1"	5'-4"	9'-2"	6'-11"
50	3'-7"	2'-8"	6'-5"	4'-10"	8'-3"	6'-2"
55	3'-3"	2'-5"	5'-10"	4'-4"	7'-6"	5'-8"
60	3'-0"	2'-3"	5'-4"	4'-0"	6'-11"	5'-2"
65	2'-9"	2'-1"	4'-11"	3'-8"	6'-4"	4'-9"
70	2'-6"	1'-11"	4'-7"	3'-5"	5'-11"	4'-5"
75	2'-4"	1'-9"	4'-3"	3'-2"	5'-6"	4'-1"

PRODUCT REVISED
as complying with the Florida Building Code
Acceptance No 05-0929.04
Expiration Date JUNE 07, 2009
By Ishaq I. Chanda
Miami Dade Product Control Division

F.B.C. (HIGH VELOCITY HURRICANE ZONE)

4/9/07

TILLECO INC.
TILLIT TESTING & ENGINEERING COMPANY
6355 N.W. 36th. St., Ste.305 - VIRGINIA GARDENS, FL 33166
Phone : (305)871-1530 . Fax : (305)871-1531
EB-0006719
WALTER A. TILLIT Jr., P. E.
FLORIDA Lic. # 44167

40mm SLAT ROLL-UP SHUTTER

ROLLINGSHIELD, INC.
(N.S.A.# 1)
2500 N.W. 74th AVENUE
MIAMI, FLORIDA 33122
Phone : (305)436-6661 . Fax : (305)436-5523

REV. No	DESCRIPTION	DATE	REV. No	DESCRIPTION	DATE
1	OLD 02-536	08/9/05	3	GENERAL	3/30/07
2	ASSOCIATION NUMBER	4/14/06	4		

DRAWN BY: L.G.
08/9/05 DATE
05-216 DRAWING No
SHEET 13 OF 16

STORM BAR LOADING CHART

MAXIMUM DESIGN PRESSURE RATING "W" (p. s. f.) AND CORRESPONDING MAXIMUM SPAN "L" FOR A GIVEN TYPE OF STORM BAR AND STORM BAR SPACING.

(USE MAXIMUM VALUES BETWEEN POSITIVE AND NEGATIVE LOADS)

MAX. SPAN FOR STORM BARS W/REGULAR CONCRETE ANCHORS

MAXIMUM DESIGN LOAD "W" (p.s.f.)	TYPE 4 STORM BAR 2" x 4" x .250"		TYPE 5 STORM BAR (2) 2" x 3" x .125"		TYPE 6 STORM BAR (2) 2" x 4" x .250"	
	STORM BAR SPACING		STORM BAR SPACING		STORM BAR SPACING	
	⩽ 3'-0"	3' TO 4'	⩽ 3'-0"	3' TO 4'	⩽ 3'-0"	3' TO 4'
40 OR LESS	11'-10"	11'-0"	10'-3"	9'-6"	14'-1"	13'-1"
45	11'-6"	10'-8"	9'-11"	9'-3"	13'-8"	12'-9"
50	11'-2"	10'-5"	9'-8"	9'-0"	13'-4"	12'-5"
55	10'-11"	10'-2"	9'-5"	8'-9"	13'-0"	12'-1"
60	10'-8"	9'-11"	9'-3"	8'-7"	12'-9"	11'-10"
65	10'-6"	9'-9"	9'-1"	8'-5"	12'-6"	11'-7"
70	10'-4"	9'-7"	8'-11"	8'-3"	12'-3"	11'-5"
75	10'-1"	9'-4"	8'-9"	8'-1"	12'-0"	11'-2"
80	9'-11"	9'-0"	8'-7"	7'-10"	11'-10"	11'-0"
85	9'-10"	8'-9"	8'-5"	7'-7"	11'-8"	10'-10"
90	9'-8"	8'-6"	8'-4"	7'-4"	11'-6"	10'-8"
95	9'-6"	8'-4"	8'-3"	7'-2"	11'-4"	10'-7"
100	9'-4"	8'-1"	8'-1"	7'-0"	11'-2"	10'-5"
105	9'-1"	7'-11"	7'-11"	6'-10"	11'-1"	10'-4"
110	8'-11"	7'-8"	7'-8"	6'-8"	10'-11"	10'-2"
115	8'-8"	7'-6"	7'-6"	6'-6"	10'-10"	10'-1"
120	8'-6"	7'-5"	7'-4"	6'-5"	10'-8"	9'-11"
125	8'-4"	7'-3"	7'-3"	6'-3"	10'-7"	9'-10"
130	8'-2"	7'-1"	7'-1"	6'-2"	10'-6"	9'-9"
135	8'-0"	6'-11"	6'-11"	6'-0"	10'-5"	9'-8"
140	7'-11"	6'-10"	6'-10"	5'-11"	10'-4"	9'-6"
145	7'-9"	6'-9"	6'-8"	5'-10"	10'-2"	9'-4"
150	7'-7"	6'-7"	6'-7"	5'-9"	10'-1"	9'-2"
155	7'-6"	6'-6"	6'-6"	5'-7"	10'-0"	9'-0"
160	7'-5"	6'-5"	6'-5"	5'-6"	9'-11"	8'-10"

* STORM BAR SPACING SHALL BE SUCH THAT MAXIMUM SLAT SPAN SHALL NOT BE EXCEEDED.

MAX. SPAN FOR STORM BARS W/SPRING-LOADED SYSTEM

MAXIMUM DESIGN LOAD "W" (p.s.f.)	TYPE 4 STORM BAR 2" x 4" x .250"		TYPE 5 STORM BAR (2) 2" x 3" x .125"		TYPE 6 STORM BAR (2) 2" x 4" x .250"	
	STORM BAR SPACING *		STORM BAR SPACING *		STORM BAR SPACING *	
	⩽ 3'-0"	3' TO 4'	⩽ 3'-0"	3' TO 4'	⩽ 3'-0"	3' TO 4'
40 OR LESS	10'-4"	7'-9"	10'-3"	9'-6"	14'-1"	12'-1"
45	9'-2"	6'-11"	9'-11"	8'-11"	13'-8"	10'-8"
50	8'-3"	6'-2"	9'-8"	8'-0"	12'-10"	9'-8"
55	7'-6"	5'-8"	9'-5"	7'-3"	11'-8"	8'-9"
60	6'-11"	5'-2"	8'-11"	6'-8"	10'-8"	8'-0"
65	6'-4"	4'-9"	8'-2"	6'-2"	9'-11"	7'-5"
70	5'-11"	4'-5"	7'-7"	5'-9"	9'-2"	6'-11"
75	5'-6"	4'-1"	7'-1"	5'-4"	8'-7"	6'-5"

PRODUCT REVISED
as complying with the Florida Building Code
Acceptance No 05-0929.04
Expiration Date JUNE 07, 2009
By Shaq I. Chanda
Miami Dade Product Control Division

F.B.C. (HIGH VELOCITY HURRICANE ZONE)

4/8/07

TILTECO INC.
TILLIT TESTING & ENGINEERING COMPANY
6355 N.W. 36th. St., Ste.305 – VIRGINIA GARDENS, Fl. 33166
Phone : (305)871-1530 . Fax : (305)871-1531
EB-0006719
WALTER A. TILLIT Jr., P. E.
FLORIDA Lic. # 44167

40mm SLAT ROLL-UP SHUTTER

ROLLINGSHIELD, INC.
(N.S.A.# 1)
2500 N.W. 74th AVENUE
MIAMI, FLORIDA 33122
Phone : (305)436-6661 . Fax : (305)436-5523

REV. No	DESCRIPTION	DATE	REV. No	DESCRIPTION	DATE
1	OLD 02-536	08/9/05	3	GENERAL	3/30/07
2	ASSOCIATION NUMBER	4/14/08	4		

DRAWN BY: L.G.
08/9/05 DATE
05-216 DRAWING No
SHEET 14 OF 16

HEADER LOADING CHART
MAXIMUM DESIGN PRESSURE RATING "W" (p. s. f.) AND CORRESPONDING MAXIMUM SPAN "L" FOR A GIVEN TYPE OF HEADER.

(USE MAXIMUM VALUES BETWEEN POSITIVE AND NEGATIVE LOADS)

MAXIMUM DESIGN LOAD "W" (p.s.f.)	TYPE 1 HEADER 2" x 3" X .125"		TYPE 2 HEADER 2" x 4" X .125"		TYPE 3 HEADER 2" x 4" X .250"				
	STORM BAR HEIGHT		STORM BAR HEIGHT		STORM BAR HEIGHT				
	⩽ 5'-0"	5' TO 7'	⩽ 5'-0"	5' TO 8'	⩽ 6'-0"	6' TO 8'	8' TO 10'	10' TO 12'	12' TO 14'
40.0 OR LESS	9'-11"	8'-4"	12'-2"	9'-8"	14'-10"	12'-10"	11'-6"	10'-6"	9'-9"
45.0	9'-4"	7'-11"	11'-6"	9'-1"	14'-0"	12'-2"	10'-10"	9'-11"	9'-2"
50.0	8'-10"	7'-6"	10'-11"	8'-8"	13'-3"	11'-6"	10'-4"	9'-5"	8'-8"
55.0	8'-5"	7'-2"	10'-5"	8'-3"	12'-8"	11'-0"	9'-10"	9'-0"	8'-4"
60.0	8'-1"	6'-10"	10'-0"	7'-10"	12'-2"	10'-6"	9'-5"	8'-7"	7'-11"
65.0	7'-9"	6'-7"	9'-7"	7'-7"	11'-8"	10'-1"	9'-0"	8'-3"	7'-8"
70.0	7'-6"	6'-4"	9'-3"	7'-3"	11'-3"	9'-9"	8'-8"	7'-11"	7'-4"
75.0	7'-3"	6'-1"	8'-11"	7'-1"	10'-10"	9'-5"	8'-5"	7'-8"	7'-1"
80.0	7'-0"	5'-11"	8'-8"	6'-10"	10'-6"	9'-1"	8'-2"	7'-5"	6'-11"
85.0	6'-9"	5'-9"	8'-4"	6'-7"	10'-2"	8'-10"	7'-11"	7'-3"	6'-8"
90.0	6'-7"	5'-7"	8'-2"	6'-5"	9'-11"	8'-7"	7'-8"	7'-0"	6'-6"
95.0	6'-5"	5'-5"	7'-11"	6'-3"	9'-8"	8'-4"	7'-6"	6'-10"	6'-4"
100.0	6'-3"	5'-3"	7'-9"	6'-1"	9'-5"	8'-2"	7'-3"	6'-8"	6'-2"
105.0	6'-1"	5'-2"	7'-6"	5'-11"	9'-2"	7'-11"	7'-1"	6'-6"	6'-0"
110.0	6'-0"	5'-0"	7'-4"	5'-10"	9'-0"	7'-9"	6'-11"	6'-4"	5'-10"
115.0	5'-10"	4'-11"	7'-2"	5'-8"	8'-9"	7'-7"	6'-9"	6'-2"	5'-9"
120.0	5'-9"	4'-10"	7'-1"	5'-7"	8'-7"	7'-5"	6'-8"	6'-1"	5'-7"
125.0	5'-7"	4'-9"	6'-11"	5'-5"	8'-5"	7'-3"	6'-6"	5'-11"	5'-6"
130.0	5'-6"	4'-8"	6'-9"	5'-4"	8'-3"	7'-2"	6'-5"	5'-10"	5'-5"
135.0	5'-5"	4'-7"	6'-8"	5'-3"	8'-1"	7'-0"	6'-3"	5'-9"	5'-4"
140.0	5'-3"	4'-6"	6'-6"	5'-2"	7'-11"	6'-11"	6'-2"	5'-7"	5'-2"
145.0	5'-2"	4'-5"	6'-5"	5'-1"	7'-10"	6'-9"	6'-1"	5'-6"	5'-1"
150.0	5'-1"	4'-4"	6'-4"	5'-0"	7'-8"	6'-8"	5'-11"	5'-5"	5'-0"
155.0	5'-0"	4'-3"	6'-2"	4'-11"	7'-7"	6'-6"	5'-10"	5'-4"	4'-11"
160.0	4'-11"	4'-2"	6'-1"	4'-10"	7'-5"	6'-5"	5'-9"	5'-3"	4'-10"

PRODUCT REVISED
as complying with the Florida Building Code
Acceptance No 05-0929.04
Expiration Date JUNE 07, 2009
By Ishag I. Chanda
Miami Dade Product Control Division

F.B.C. (HIGH VELOCITY HURRICANE ZONE)

4/9/07

TILTECO INC.
TILLIT TESTING & ENGINEERING COMPANY
6355 N.W. 36th. St., Ste.305 – VIRGINA GARDENS, FL 33166
Phone : (305)871-1530 . Fax : (305)871-1531
EB-0006719
WALTER A. TILLIT Jr., P. E.
FLORIDA Lic. # 44167

40mm SLAT ROLL-UP SHUTTER

ROLLINGSHIELD, INC.
(N.S.A.# 1)
2500 N.W. 74th AVENUE
MIAMI, FLORIDA 33122
Phone : (305)436-6661 . Fax : (305)436-5523

REV. No	DESCRIPTION	DATE	REV. No	DESCRIPTION	DATE
1	OLD 02-536	08/9/05	3	GENERAL	3/30/07
2	ASSOCIATION NUMBER	4/14/06	4		

DRAWN BY: L.G.
08/9/05 DATE
05-216 DRAWING No
SHEET 15 OF 16

MULLION LOADING CHART

MAXIMUM DESIGN PRESSURE RATING "W" (p. s. f.) AND CORRESPONDING MAXIMUM SPAN "L"(Ft) FOR A GIVEN TYPE OF MULLION AND MULLION SPACING (Ft.).

(USE MAXIMUM VALUES BETWEEN POSITIVE AND NEGATIVE LOADS)

MAXIMUM DESIGN LOAD "W" (p.s.f.)	TYPE 1 MULLION 3" x 4" x .125"				TYPE 2 MULLION 4" x 4" x .250"				TYPE 3 MULLION 4" x 6" x .250"					
	MULLION SPACING				MULLION SPACING				MULLION SPACING					
	⩽ 4'-0"	4' TO 5'	5' TO 6'	6' TO 8'	⩽ 4'-0"	4' TO 5'	5' TO 6'	6' TO 8'	⩽ 4'-0"	4' TO 5'	5' TO 6'	6' TO 8'	8' TO 10'	10' TO 12'
40.0 OR LESS	9'-0"	8'-4"	7'-10"	8'-2"	11'-9"	10'-11"	10'-3"	10'-9"	16'-4"	15'-2"	14'-3"	14'-10"	13'-10"	13'-0"
45.0	8'-8"	8'-0"	7'-7"	7'-10"	11'-4"	10'-6"	9'-11"	10'-4"	15'-8"	14'-7"	13'-8"	14'-4"	13'-3"	12'-6"
50.0	8'-4"	7'-9"	7'-3"	7'-7"	10'-11"	10'-2"	9'-7"	10'-0"	15'-2"	14'-1"	13'-3"	13'-10"	12'-10"	12'-1"
55.0	8'-1"	7'-6"	7'-1"	7'-4"	10'-7"	9'-10"	9'-3"	9'-8"	14'-8"	13'-7"	12'-10"	13'-4"	12'-5"	11'-8"
60.0	7'-10"	7'-3"	6'-10"	7'-2"	10'-3"	9'-7"	9'-0"	9'-5"	14'-3"	13'-3"	12'-5"	13'-0"	12'-1"	11'-4"
65.0	7'-8"	7'-1"	6'-8"	7'-0"	10'-0"	9'-4"	8'-9"	9'-2"	13'-11"	12'-11"	12'-2"	12'-8"	11'-9"	11'-1"
70.0	7'-5"	6'-11"	6'-6"	6'-10"	9'-9"	9'-1"	8'-6"	8'-11"	13'-7"	12'-7"	11'-10"	12'-4"	11'-5"	10'-9"
75.0	7'-3"	6'-9"	6'-4"	6'-8"	9'-7"	8'-10"	8'-4"	8'-8"	13'-3"	12'-3"	11'-7"	12'-1"	11'-2"	10'-6"
80.0	7'-2"	6'-7"	6'-3"	6'-6"	9'-4"	8'-8"	8'-2"	8'-6"	12'-11"	12'-0"	11'-4"	11'-10"	10'-11"	10'-4"
85.0	7'-0"	6'-6"	6'-1"	6'-4"	9'-2"	8'-6"	8'-0"	8'-4"	12'-8"	11'-9"	11'-1"	11'-7"	10'-9"	10'-1"
90.0	6'-10"	6'-4"	6'-0"	6'-3"	9'-0"	8'-4"	7'-10"	8'-2"	12'-5"	11'-7"	10'-11"	11'-4"	10'-6"	9'-11"
95.0	6'-9"	6'-3"	5'-10"	6'-2"	8'-10"	8'-2"	7'-9"	8'-1"	12'-3"	11'-4"	10'-8"	11'-2"	10'-4"	9'-9"
100.0	6'-7"	6'-2"	5'-9"	6'-0"	8'-8"	8'-1"	7'-7"	7'-11"	12'-0"	11'-2"	10'-6"	10'-11"	10'-2"	9'-7"
105.0	6'-6"	6'-1"	5'-7"	5'-11"	8'-6"	7'-11"	7'-6"	7'-9"	11'-10"	11'-0"	10'-4"	10'-9"	–	–
110.0	6'-5"	5'-11"	5'-5"	5'-10"	8'-5"	7'-10"	7'-4"	7'-8"	11'-8"	10'-10"	10'-2"	10'-7"	–	–
115.0	6'-4"	5'-10"	5'-4"	5'-8"	8'-3"	7'-8"	7'-3"	7'-7"	11'-6"	10'-8"	10'-0"	10'-5"	–	–
120.0	6'-3"	5'-9"	5'-3"	5'-7"	8'-2"	7'-7"	7'-2"	7'-5"	11'-4"	10'-6"	9'-11"	10'-4"	–	–
125.0	6'-2"	5'-7"	5'-1"	5'-5"	8'-1"	7'-6"	7'-0"	7'-4"	11'-2"	10'-4"	9'-9"	10'-2"	–	–
130.0	6'-1"	5'-6"	5'-0"	5'-4"	7'-11"	7'-5"	6'-11"	7'-3"	11'-0"	10'-3"	9'-8"	10'-0"	–	–
135.0	6'-0"	5'-5"	4'-11"	5'-3"	7'-10"	7'-3"	6'-10"	7'-2"	10'-11"	10'-1"	9'-6"	9'-11"	–	–
140.0	5'-11"	5'-3"	4'-10"	5'-2"	7'-9"	7'-2"	6'-9"	7'-1"	10'-9"	10'-0"	9'-5"	9'-10"	–	–
145.0	5'-10"	5'-2"	4'-9"	5'-1"	7'-8"	7'-1"	6'-8"	7'-0"	10'-7"	9'-10"	9'-3"	9'-8"	–	–
150.0	5'-9"	5'-1"	4'-8"	5'-0"	7'-7"	7'-0"	6'-7"	6'-11"	10'-6"	9'-9"	9'-2"	9'-7"	–	–
155.0	5'-7"	5'-0"	4'-7"	4'-11"	7'-6"	7'-0"	6'-7"	6'-10"	10'-5"	9'-8"	9'-1"	9'-6"	–	–
160.0	5'-6"	4'-11"	4'-6"	4'-10"	7'-5"	6'-11"	6'-6"	6'-9"	10'-3"	9'-7"	9'-0"	9'-4"	–	–

NOTES : REFER TO ELEVATIONS ON SHEET 1A OF 16

1-. FOR MULLIONS INSTALLED W/O STORM BARS

A) MULLION SPACING SHALL BE SUCH THAT MAXIMUM SLAT SPAN SHALL NOT BE EXCEEDED

2-. FOR MULLIONS INSTALLED W/ STORM BARS & HEADERS

A) MULLION SPACING SHALL BE SUCH THAT MAXIMUM HEADER SPAN SHALL NOT BE EXCEEDED

B) STORM BAR SPACING SHALL BE SUCH THAT MAXIMUM SLAT SPAN SHALL NOT BE EXCEEDED

PRODUCT REVISED
as complying with the Florida Building Code
Acceptance No 05-0929.04
Expiration Date JUNE 07, 2009
By Isaac I. Chanok
Miami Dade Product Control Division

F.B.C. (HIGH VELOCITY HURRICANE ZONE)

4/4/07

TILTECO INC.
TILLIT TESTING & ENGINEERING COMPANY
6355 N.W. 36th. St., Ste.305 - VIRGINIA GARDENS, FL 33166
Phone : (305)871-1530 . Fax : (305)871-1531
EB-0006719
WALTER A. TILLIT Jr., P. E.
FLORIDA Lic. # 44167

40mm SLAT ROLL-UP SHUTTER

ROLLINGSHIELD, INC.
(N.S.A.# 1)
2500 N.W. 74th AVENUE
MIAMI, FLORIDA 33122
Phone : (305)436-6661 . Fax : (305)436-5523

REV. No	DESCRIPTION	DATE	REV. No	DESCRIPTION	DATE
1	OLD 02-536	08/9/05	3	GENERAL	3/30/07
2	ASSOCIATION NUMBER	4/14/06	4		

DRAWN BY: L.G.

08/9/05 DATE

05-216 DRAWING No

SHEET 16 OF 16