MIAMI-DADE

BUILDING CODE COMPLIANCE OFFICE (BCCO)
PRODUCT CONTROL DIVISION

MIAMI-DADE COUNTY, FLORIDA
METRO-DADE FLAGLER BUILDING
140 WEST FLAGLER STREET, SUITE 1603
MIAMI, FLORIDA 33130-1563
(305) 375-2901 FAX (305) 375-2908

NOTICE OF ACCEPTANCE (NOA)

Jordan's Aluminum, Inc.
116 North 61 Avenue.
Hollywood, FL 33024

SCOPE:
This NOA is being issued under the applicable rules and regulations governing the use of construction materials. The documentation submitted has been reviewed by Miami-Dade County Product Control Division and accepted by the Board of Rules and Appeals (BORA) to be used in Miami Dade County and other areas where allowed by the Authority Having Jurisdiction (AHJ).

This NOA shall not be valid after the expiration date stated below. The Miami-Dade County Product Control Division (In Miami Dade County) and/or the AHJ (in areas other than Miami Dade County) reserve the right to have this product or material tested for quality assurance purposes. If this product or material fails to perform in the accepted manner, the manufacturer will incur the expense of such testing and the AHJ may immediately revoke, modify, or suspend the use of such product or material within their jurisdiction. BORA reserves the right to revoke this acceptance, if it is determined by Miami-Dade County Product Control Division that this product or material fails to meet the requirements of the applicable building code.
This product is approved as described herein, and has been designed to comply with the High Velocity Hurricane Zone of the Florida Building Code.

DESCRIPTION: 1200 Series Roll Up Shutter

APPROVAL DOCUMENT: Drawing No. 05-240, titled "1200 Series Extruded Roll Up Shutter", sheets 1 through 21, prepared by Tilteco Inc., dated 08/10/05 with last revision on 10/12/005, signed and sealed by Walter A. Tillit Jr. P.E., bearing the Miami-Dade County Product Control Revision stamp with the Notice of Acceptance number and expiration date by the Miami-Dade County Product Control Division.

MISSILE IMPACT RATING: Large and Small Missile Impact

LABELING: Each unit shall bear a permanent label with the manufacturer's name or logo, city, state and following statement: "Miami-Dade County Product Control Approved", unless otherwise noted herein.

RENEWAL of this NOA shall be considered after a renewal application has been filed and there has been no change in the applicable building code negatively affecting the performance of this product.

TERMINATION of this NOA will occur after the expiration date or if there has been a revision or change in the materials, use, and/or manufacture of the product or process. Misuse of this NOA as an endorsement of any product, for sales, advertising or any other purposes shall automatically terminate this NOA. Failure to comply with any section of this NOA shall be cause for termination and removal of NOA.

ADVERTISEMENT: The NOA number preceded by the words Miami-Dade County, Florida, and followed by the expiration date may be displayed in advertising literature. If any portion of the NOA is displayed, then it shall be done in its entirety.

INSPECTION: A copy of this entire NOA shall be provided to the user by the manufacturer or its distributors and shall be available for inspection at the job site at the request of the Building Official.
This NOA **revises and renews NOA # 02-0201.01** and, consists of this page 1, eEvidence Page E1,as well as approval document mentioned above.
The submitted documentation was reviewed by **Mohammed Iqbal Shaikh, P.E.**

PRODUCT CONTROL ACCEPTED
04/19/08

Jordan's Aluminum, Inc.

NOTICE OF ACCEPTANCE: EVIDENCE SUBMITTED

A. DRAWINGS

1. Drawing No. 05-240, titled "1200 Series Extruded Roll Up Shutter", sheets 1 through 21, prepared by Tilteco Inc., dated 08/10/05 with last revision on 10/12/005, signed and sealed by Walter A. Tillit Jr. P.E.,

B. TESTS

1. Test report on Large Missile Impact test per PA 201 and Cyclic Wind Pressure test per PA 203of 1200 Series Roll Shutter with SSI 1200 slat, prepared by Hurricane Engineering & Testing Inc., report No. 98-773, dated 12/15/98, signed and sealed by H. M. medina, P.E.
2. Test report on Uniform Static Air Pressure test per PA 202 of 1200 Series Roll Shutter with SSI 1200 slat prepared by Hurricane Engineering & Testing, Inc., report No. Heti 98-771, 776, 778 & 780, dated 12/10/98, 12/18/98, 12/21/98 & 12/28/98, signed and sealed by H. M. Medina, P.E.
3. Test report on Large Missile Impact test per PA 201 of 1200 Series Roll Shutter with SSI 1200 slat prepared by Hurricane Engineering & Testing, Inc. report No. Heti 98-777 & 781, dated 12/18/98 & 12/29/98, signed and sealed by H. M. Medina, P.E.
4. Test report on Large Missile Impact test per PA 201 of Vertical Bars for 1200 Series Roll Shutter prepared by Hurricane Engineering & Testing, Inc. report No. Heti 98-782, dated 01/04/99, signed and sealed by H. M. Medina, P.E.

C. CALCULATIONS

1. Comparative analysis & design of slat, track, vertical bar, header, mullion & anchors, 189 pages, dated 10/20/05, signed and sealed by Walter A. Tillit Jr. P.E.

D. MATERIAL CERTIFICATIONS

1. Mechanical Properties Reports No. SSI 1200, 1202, 1210, 1240, 1250, 1260, 1261 & 5002 issued by Cardinal Aluminum Co., dated 01/05/99, with chemical compositions and mechanical properties for aluminum alloy 6063-T6 & 6005-T5.
2. Tensile test report per ASTM E8-93, test No. Heti 98-T133 prepared by Hurricane Engineering & Testing, Inc., dated 01/21/99, signed and sealed by H. M. Medina, P.E.

E. STATEMENTS

1. Letters of 2004 Code compliance issued by Tilteco Inc. on 02/23/07 and 02/26/07, signed and sealed by Walter A. Tillit Jr. P.E.
2. Letter of no financial interest issued by Tilteco Inc. on 02/23/07, signed and sealed by Walter A. Tillit Jr. P.E.

Mohammed Iqbal Shaikh, P.E.
Senior Building Code Compliance Specialist
NOA No. 05-1003.04
Expiration Date: May 20, 2008
Approval Date: May 10, 2007

GENERAL NOTES:

1. EXTRUDED ROLL UP SHUTTER SHOWN ON THIS PRODUCT APPROVAL DOCUMENT (P.A.D.) HAS BEEN VERIFIED FOR CODE COMPLIANCE IN ACCORDANCE WITH THE 2004 EDITION OF THE FLORIDA BUILDING CODE.
DESIGN WIND LOADS SHALL BE DETERMINED AS PER SECTION 1620 OF THE ABOVE MENTIONED CODE. IN ORDER TO VERIFY THAT COMPONENTS AND ANCHORS ON THIS P.A.D. AS TESTED WERE NOT OVER STRESSED, A 33% INCREASE IN ALLOWABLE STRESS FOR WIND LOADS WAS NOT USED IN THEIR ANALYSIS. A DURATION FACTOR CD=1.60 WAS USED FOR VERIFICATION OF FASTENERS IN WOOD.
EXTRUDED ROLL UP SHUTTER ADEQUACY FOR IMPACT AND FATIGUE RESISTANCE HAS BEEN VERIFIED IN ACCORDANCE WITH SECTION 1609.1.4 OF THE ABOVE MENTIONED CODE AS PER HURRICANE ENGINEERING & TESTING INC. REPORTS # 98-771, 98-773, 98-776, 98-777, 98-778, 98-780, 98-781, 98-782, AS PER TAS-201, TAS-202 & TAS-203 PROTOCOLS.

2. ALL ALUMINUM EXTRUSIONS SHALL BE 6063-T6 ALLOY (UNLESS OTHERWISE NOTED).

3. ALL SCREWS TO BE STAINLESS STEEL 304 OR 316 SERIES W/50 ksi YIELD STRENGTH AND 90 ksi TENSILE STRENGTH OR CORROSION RESISTANT COATED CARBON STEEL AS PER DIN 50018.

4. BOLTS TO BE A.S.T.M.-307, GALVANIZED OR AISI 304 SERIES STAINLESS STEEL WITH 36 ksi MINIMUM YIELD STRENGTH.

5. STORM BARS AT FLOOR OR CEILING MOUNTING INSTALLATIONS MAY BE REMOVABLE AT NON HURRICANE CONDITIONS. HOWEVER, EACH STORM BAR SHALL BEAR A PERMANENT LABEL IN A VISIBLE PLACE WITH A WARNING NOTE INSTRUCTING THE TENANT OR OWNER THAT STORM BARS MUST BE INSTALLED WITH CORRESPONDING HARDWARE DURING PERIODS OF HURRICANE WARNING AND THAT ROLL UP SHUTTERS WILL NOT OFFER HURRICANE PROTECTION UNLESS ALL STORM BARS ARE INSTALLED AS DIRECTED.

6. REMOVABLE STORM BARS SHALL BE STORED IN A CONSPICUOUS PLACE WITH EASY AND IMMEDIATE ACCESS SO THAT THEY CAN BE REACHED AND INSTALLED ANY TIME (HURRICANE CONDITIONS OR NOT) SLATS ARE ROLLED DOWN. THE EFFECT OF THE SLATS ROLLED DOWN WITHOUT STORM BARS IS; THOSE SLATS WILL SLIP OUT OF TRACK DUE TO THE DEFLECTION CAUSED BY WIND FORCES.

7. ANCHORS TO WALL FOR SIDE RAILS & BOX CONNECTION SHALL BE AS FOLLOWS: (UNLESS OTHERWISE NOTED)

(A) TO EXISTING POURED CONCRETE (f'c= 3350 psi Min.):

-1/4" ø TAPCON ANCHORS OR CRETE-FLEX SS4 ANCHORS AS MANUFACTURED BY ELCO TEXTRON, INC.

NOTES:

A.1) MINIMUM EMBEDMENT OF TAPCON ANCHORS OR CRETE-FLEX SS4 ANCHORS INTO POURED CONCRETE SHALL BE 1 3/4". NO EMBEDMENT INTO STUCCO SHALL BE CONSIDERED AS PART OF THE REQUIRED EMBEDMENT.

A.2) IN CASE THAT PRECAST STONE, PRECAST CONCRETE PANELS, OR PAVERS BE FOUND ON THE EXISTING WALL OR FLOOR, ANCHORS SHALL BE LONG ENOUGH TO REACH THE MAIN STRUCTURE BEHIND SUCH PANELS.

(B) TO EXISTING A.S.T.M. C-90 CONCRETE BLOCK WALL:

-1/4" ø TAPCON ANCHORS OR CRETE-FLEX SS4 ANCHORS, AS MANUFACTURED BY ELCO TEXTRON, INC.

NOTES:

B.1) MINIMUM EMBEDMENT OF TAPCON ANCHORS OR CRETE-FLEX SS4 ANCHORS, INTO THE CONCRETE BLOCK UNIT SHALL BE 1 1/4".

B.2) IN CASE THAT PRECAST STONE, PRECAST CONCRETE PANELS, OR PAVERS BE FOUND ON THE EXISTING WALL OR FLOOR, ANCHORS SHALL BE LONG ENOUGH TO REACH THE MAIN STRUCTURE BEHIND SUCH PANELS.

(C) ANCHORS SHALL BE INSTALLED FOLLOWING ALL OF THE RECOMMENDATIONS AND SPECIFICATIONS OF THE ANCHOR'S MANUFACTURER.

(D) ANCHORS REQUIRED FOR STORM BARS, HEADERS & MULLION CONNECTIONS TO CONCRETE f'c=3 ksi Min. SHALL BE AS SPECIFIED ON APPLICABLE SECTIONS SHOWN ON SHEETS 8, 9, 10, 11, 12, 13 & 14 POWER BOLTS & CALK-IN ANCHORS TO BE AS MANUFACTURED BY POWERS FASTENERS, INC. RESPECTIVELY. 1/4" ø TAPCON ANCHORS, AS MANUFACTURED BY ELCO TEXTRON, INC.
MINIMUM EDGE DISTANCE AND SPACING FOR ABOVE MENTIONED ANCHORS SHALL BE AS INDICATED BELOW OR AT ABOVE MENTIONED SHEET, WHICHEVER IS LARGER (MORE CRITICAL).

ANCHOR	SPACING	EDGE DISTANCE
3/8"ø POWER BOLT	3 3/4"	4 1/2"
3/8"ø TAPPER	3 3/4"	4 1/2"
1/4"ø CALK-IN	2 1/2"	3"
3/8"ø CALK-IN	3 3/4"	4 1/2"
1/2"ø CALK-IN	5"	6"
1/4"ø TAPCON	3"	2 1/2"
1/2"ø POWER BOLT	5"	6"

8. IT SHALL BE THE RESPONSIBILITY OF THE CONTRACTOR TO VERIFY THE SOUNDNESS OF THE STRUCTURE WHERE SHUTTER IS TO BE ATTACHED TO INSURE PROPER ANCHORAGE.

9. SHUTTER MANUFACTURER'S STAMP LABEL BE PLACED ON THE EXPOSED SURFACE OF THE SIDE RAIL APPROXIMATELY 4" ABOVE THE BOTTOM OF SUCH RAIL. LABEL SHALL READ AS FOLLOWS:
JORDAN'S ALUMINUM, INC.
HOLLYWOOD, FL.
MIAMI-DADE COUNTY PRODUCT APPROVED.

10. ROLL-UP MECHANISM NOT PART OF THIS APPROVAL, BUT SHALL BE CERTIFIED BY AN INDEPENDENT TESTING AGENCY.

11. (A) THIS (P.A.D.) PREPARED BY THIS ENGINEER IS GENERIC AND DOES NOT PROVIDE INFORMATION FOR A SITE SPECIFIC PROJECT; i.e. WHERE THE SITE CONDITIONS DEVIATE FROM THE P.A.D.

(B) CONTRACTOR TO BE RESPONSIBLE FOR THE SELECTION, PURCHASE AND INSTALLATION INCLUDING LIFE SAFETY OF THIS PRODUCT, BASED ON THIS PRODUCT P.A.D. PROVIDED HE/SHE DOES NOT DEVIATE FROM THE CONDITIONS DETAILED ON THIS DOCUMENT. CONSTRUCTION SAFETY AT SITE IS THE CONTRACTOR'S RESPONSIBILITY.

(C) THIS PRODUCT APPROVAL DOCUMENT WILL BE CONSIDERED INVALID IF ALTERED BY ANY MEANS.

(D) SITE SPECIFIC PROJECTS SHALL BE PREPARED BY A PROFESSIONAL ENGINEER OR ARCHITECT WHICH WILL BECOME THE ENGINEER OF RECORD (E.O.R) FOR THE PROJECT AND WHO WILL BE RESPONSIBLE FOR THE PROPER USE OF THE P.A.D.

(E) THIS P.A.D. SHALL COMPLY WITH SECTION 2: 61G15 OF THE FLORIDA ADMINISTRATIVE CODE.

PRODUCT RENEWED
as complying with the Florida
Building Code
Acceptance No. 05-1003.04
Expiration Date 05/20/08
By M. Thate
Miami-Dade Product Control
Division

10/20/25

F.B.C. (HIGH VELOCITY HURRICANE ZONE)

TILTECO INC.
TILLIT TESTING & ENGINEERING COMPANY
6355 N.W. 36th. St. Ste. 305, VIRGINIA GARDENS, Fl. 33166
Phone : (305)871-1530 . Fax : (305)871-1531
EB-0006719
WALTER A. TILLIT Jr., P. E.
FLORIDA Lic. 44167

1200 SERIES EXTRUDED ROLL UP SHUTTERS

JORDAN'S ALUMINUM, INC.
5731 DEWEY STREET
HOLLYWOOD, FL. 33023

REV. NO	DESCRIPTION	DATE	REV. No	DESCRIPTION	DATE
1	3/8" TAPPER	10/19/05	3		
2			4		

DRAWN BY: M.C.V. / L.G.
8/10/05 DATE
05-240 DRAWING No
SHEET 1 OF 21

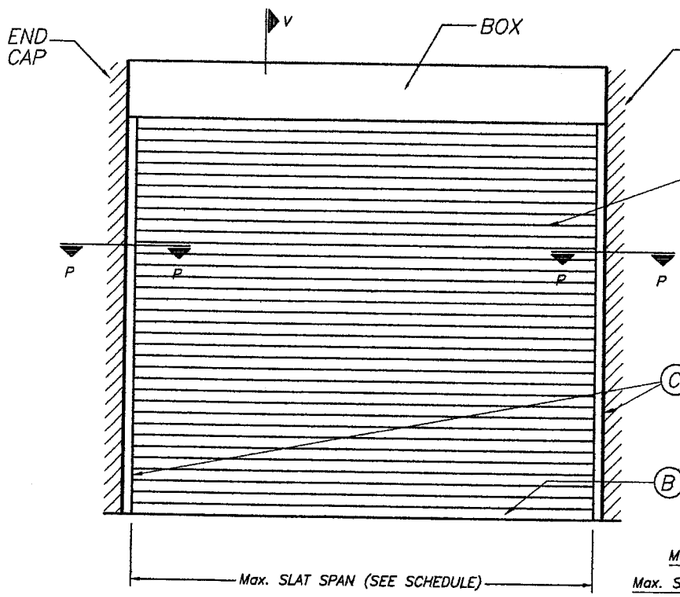

TYPICAL SINGLE UNIT ELEVATION (NO STORM BARS REQUIRED)

NOTE: SEE SHEET 3 THRU 6 OF 21 FOR COMPONENTS NOMENCLATURE.

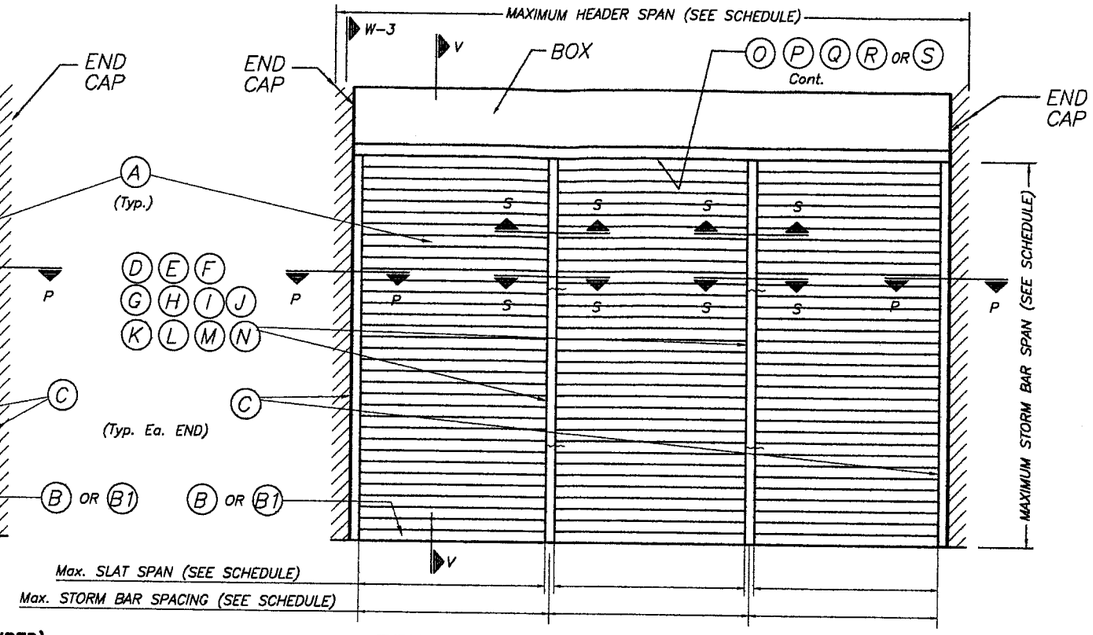

TYPICAL MULTIPLE UNIT ELEVATION (STORM BARS REQUIRED)

NOTE: SEE SHEET 3 THRU 6 OF 21 FOR COMPONENTS NOMENCLATURE.

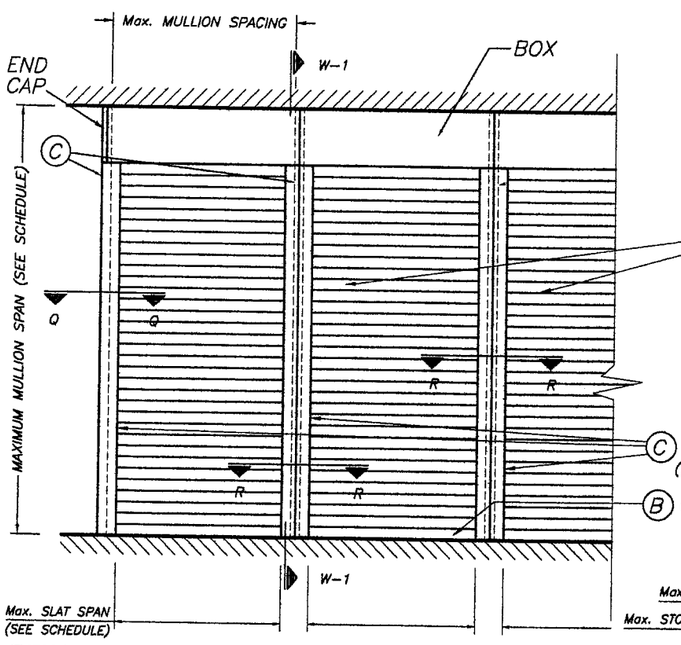

TYPICAL CONSECUTIVE SINGLE UNIT ELEVATION (NO STORM BARS REQUIRED)

NOTE: SEE SHEET 3 THRU 6 OF 21 FOR COMPONENTS NOMENCLATURE.

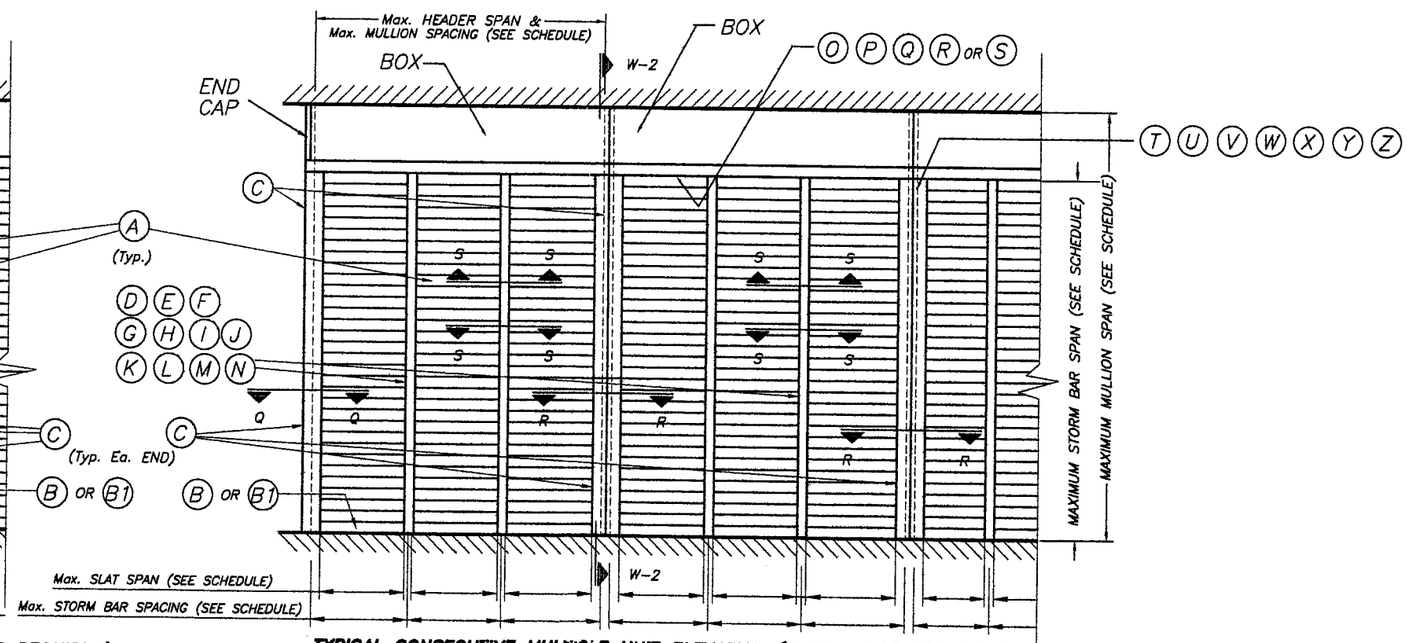

TYPICAL CONSECUTIVE MULTIPLE UNIT ELEVATION (STORM BARS REQUIRED)

NOTE: SEE SHEET 3 THRU 6 OF 21 FOR COMPONENTS NOMENCLATURE.

PRODUCT APPROVED
Miami-Dade County, Florida
Application No. 05-1003.04
Expiration Date 05/20/08
M Shah
Product Control

F.B.C. (HIGH VELOCITY HURRICANE ZONE)

NOTE:
SEE SECTIONS ON
SHEET 7 THRU 14.

10/20/05

TILTECO INC.
TILLIT TESTING & ENGINEERING COMPANY
6355 N.W. 36th St., Ste. 305, VIRGINIA GARDENS, FL 33166
Phone : (305)871-1530 . Fax : (305)871-1531
EB-0006719
WALTER A. TILLIT Jr., P. E.
FLORIDA Lic. 44167

1200 SERIES EXTRUDED ROLL UP SHUTTERS

JORDAN'S ALUMINUM, INC.
5731 DEWEY STREET
HOLLYWOOD, FL. 33023

REV. NO	DESCRIPTION	DATE	REV. No	DESCRIPTION	DATE
1	–	–	3	–	–
2	–	–	4	–	–

DRAWN BY: M.C.V.
8/10/05 DATE
05-240 DRAWING No
SHEET 2 OF 21

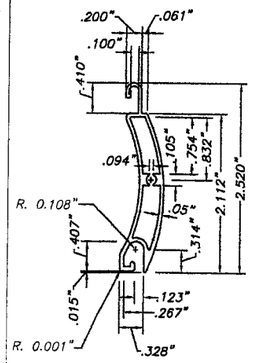

(A) TYPE 1 SLAT:
SSI 1200
6063-T6 ALUMINUM ALLOY
SCALE: 1/2" = 1"

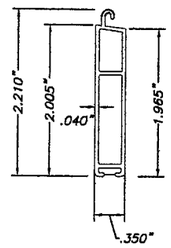

(B) TYPE 2 SLAT:
SSI 1202
6063-T6 ALUMINUM ALLOY
SCALE: 1/2" = 1"

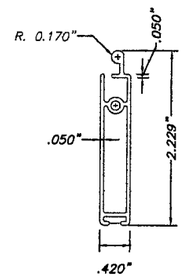

(B1) OPTIONAL TYPE 2 SLAT:
SSI 5002
6063-T6 ALUMINUM ALLOY
SCALE: 1/2" = 1"

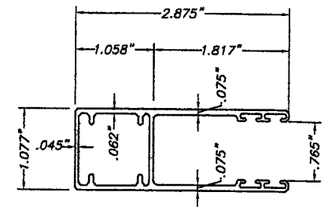

(C) TYPE 1 SIDE RAIL:
SSI 1210
6063-T6 Alum. ALLOY
SCALE: 1/2" = 1"

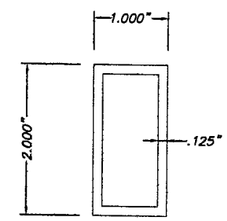

(D) TYPE 1 STORM BAR:
6063-T6 ALUMINUM ALLOY
SCALE: 1/2" = 1"

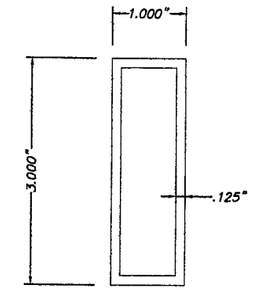

(E) TYPE 2 STORM BAR:
6063-T6 ALUMINUM ALLOY
SCALE: 1/2" = 1"

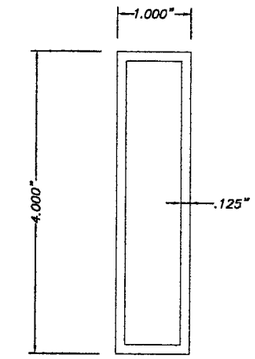

(F) TYPE 3 STORM BAR:
6063-T6 ALUMINUM ALLOY
SCALE: 1/2" = 1"

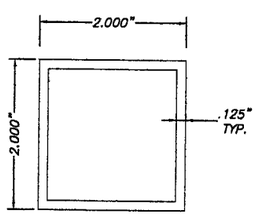

(G) TYPE 4 STORM BAR:
6063-T6 ALUMINUM ALLOY
SCALE: 1/2" = 1"

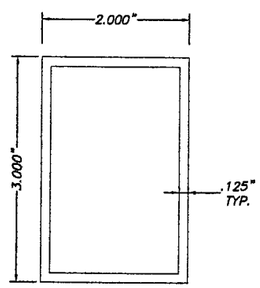

(H) TYPE 5 STORM BAR:
6063-T6 ALUMINUM ALLOY
SCALE: 1/2" = 1"

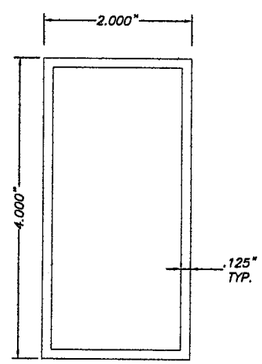

(I) TYPE 6 STORM BAR:
6063-T6 ALUMINUM ALLOY
SCALE: 1/2" = 1"

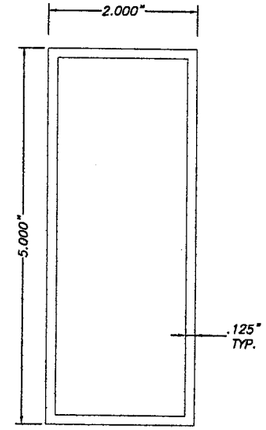

(J) TYPE 7 STORM BAR:
6063-T6 ALUMINUM ALLOY
SCALE: 1/2" = 1"

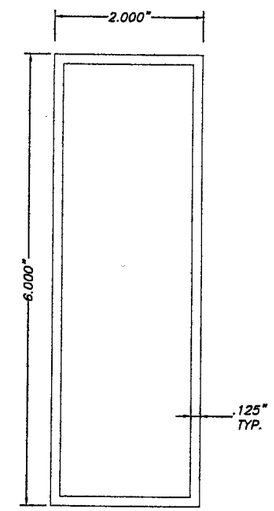

(K) TYPE 8 STORM BAR:
6063-T6 ALUMINUM ALLOY
SCALE: 1/2" = 1"

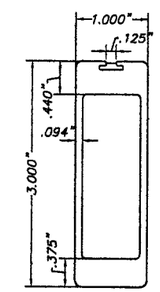

(L) TYPE 9 STORM BAR:
SSI 1260 VB
6063-T6 ALUMINUM ALLOY
SCALE: 1/2" = 1"

PRODUCT RENEWED
as complying with the Florida
Building Code
Acceptance No 05-1003.04
Expiration Date 05/20/08
By M. Khan
Miami-Dade Product Control
Division

F.B.C. (HIGH VELOCITY HURRICANE ZONE)

10/20/05

TILTECO INC.
TILLIT TESTING & ENGINEERING COMPANY
6355 N.W. 36th. St. Ste. 305, VIRGINIA GARDENS, FL 33166
Phone : (305)871-1530 . Fax : (305)871-1531
EB-0006719
WALTER A. TILLIT Jr., P. E.
FLORIDA Lic. 44167

1200 SERIES EXTRUDED ROLL UP SHUTTERS

JORDAN'S ALUMINUM, INC.
5731 DEWEY STREET
HOLLYWOOD, FL. 33023

REV. NO	DESCRIPTION	DATE	REV. No	DESCRIPTION	DATE
1	–	–	3	–	–
2	–	–	4	–	–

DRAWN BY: M.C.V.
8/10/05 DATE
05-240 DRAWING No
SHEET 3 OF 21

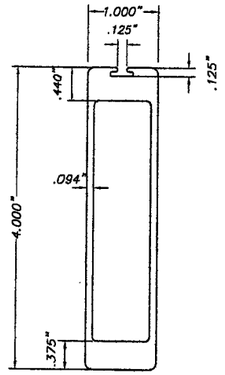

(M) TYPE 10 STORM BAR:
SSI 1261 VB
6063-T6 ALUMINUM ALLOY
SCALE: 1/2" = 1"

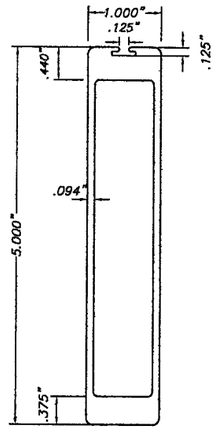

(N) TYPE 11 STORM BAR:
SSI 1262 VB
6005-T5 ALUMINUM ALLOY
SCALE: 1/2" = 1"

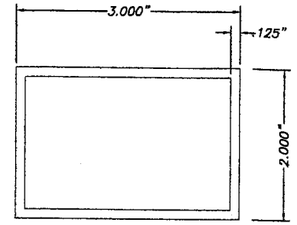

(O) HEADER TYPE 1:
6063-T6 ALUMINUM ALLOY
SCALE: 1/2" = 1"

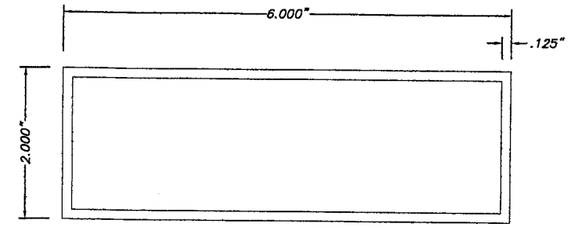

(P) HEADER TYPE 2:
6063-T6 ALUMINUM ALLOY
SCALE: 1/2" = 1"

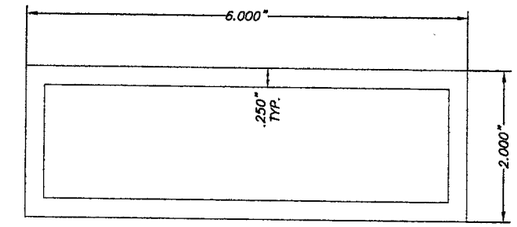

(Q) HEADER TYPE 3:
6063-T6 ALUMINUM ALLOY
SCALE: 1/2" = 1"

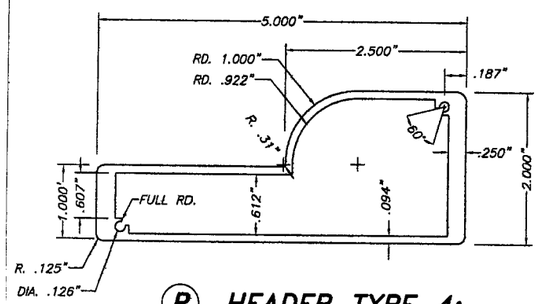

(R) HEADER TYPE 4:
6005-T5 ALUMINUM ALLOY
SCALE: 1/2" = 1"

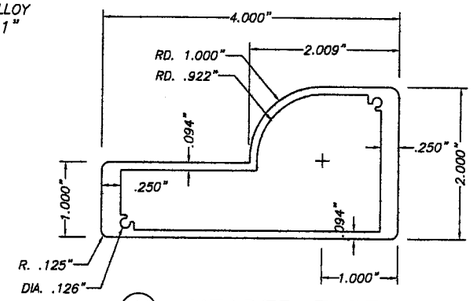

(S) HEADER TYPE 5:
6005-T5 ALUMINUM ALLOY
SCALE: 1/2" = 1"

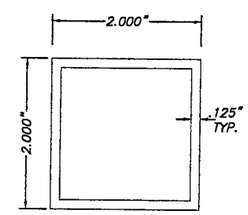

(T) TYPE 1 MULLION
6063-T6 ALUMINUM ALLOY
SCALE: 1/2" = 1"

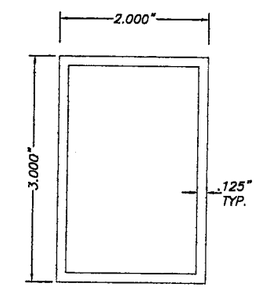

(U) TYPE 2 MULLION
6063-T6 ALUMINUM ALLOY
SCALE: 1/2" = 1"

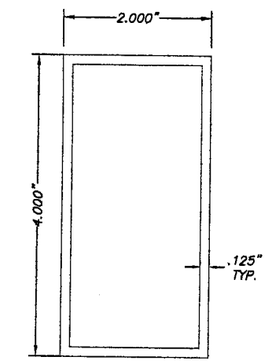

(V) TYPE 3 MULLION
6063-T6 ALUMINUM ALLOY
SCALE: 1/2" = 1"

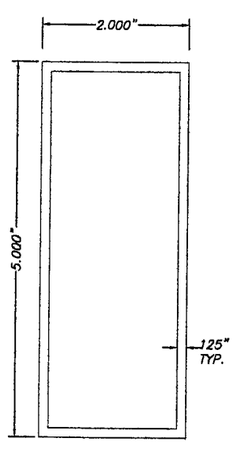

(W) TYPE 4 MULLION
6063-T6 ALUMINUM ALLOY
SCALE: 1/2" = 1"

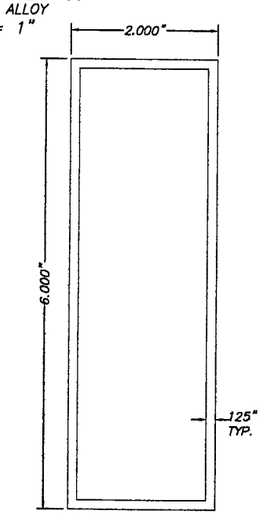

(X) TYPE 5 MULLION
6063-T6 ALUMINUM ALLOY
SCALE: 1/2" = 1"

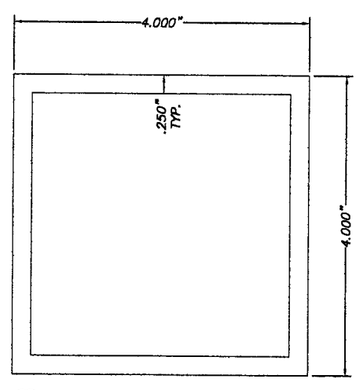

(Y) TYPE 6 MULLION
6063-T6 ALUMINUM ALLOY
SCALE: 1/2" = 1"

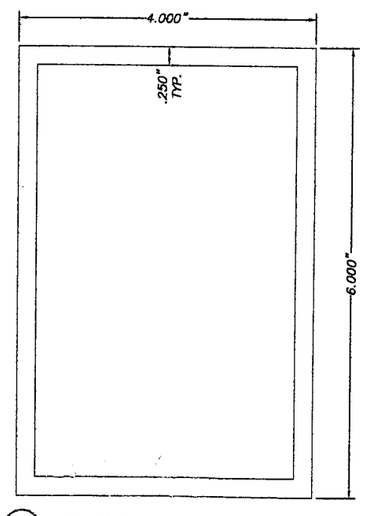

(Z) TYPE 7 MULLION
6063-T6 ALUMINUM ALLOY
SCALE: 1/2" = 1"

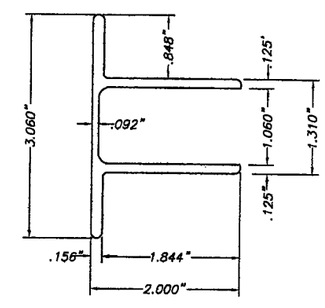

(CL) TYPE 1 CLIP
6063-T6 ALUMINUM ALLOY
SCALE: 1/2" = 1"

PRODUCT APPROVAL
Accepted as meeting the Broward County Code
Application No. 05-1003.04
Expiration Date 05/20/08
Broward County Product Control Division

F.B.C. (HIGH VELOCITY HURRICANE ZONE)

10/20/05

TILTECO INC.
TILLIT TESTING & ENGINEERING COMPANY
6355 N.W. 36th St. Ste. 305, VIRGINIA GARDENS, FL 33166
Phone : (305)871-1530 . Fax : (305)871-1531
EB-0006719
WALTER A. TILLIT Jr., P. E.
FLORIDA Lic. 44167

1200 SERIES EXTRUDED ROLL UP SHUTTERS

JORDAN'S ALUMINUM, INC.
5731 DEWEY STREET
HOLLYWOOD, FL. 33023

REV. NO	DESCRIPTION	DATE	REV. No	DESCRIPTION	DATE
1	–	–	3	–	–
2	–	–	4	–	–

DRAWN BY: M.C.V.
8/10/05 DATE
05-240 DRAWING No
SHEET 4 OF 21

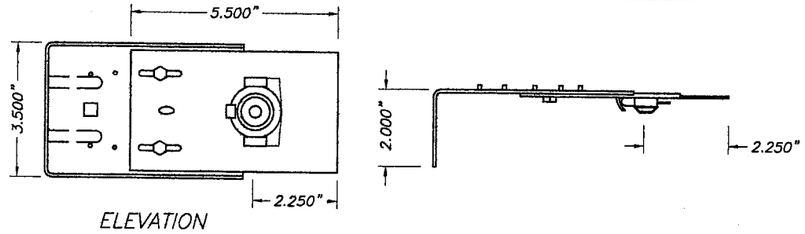

SIDE BRACKET SCALE: 1/4" = 1"

1010 ELITE ROLLED STEEL F. E.
P. O. 1 Z 200 DESIGNATION
Ftu= 410 NW/MM2. % OF STRETCH
MINIMAL ON TEST. BAR OF 80 MM: 24 %
G-90 GALVANIZED COATING Thk.: .060"

END BRACKET SYSTEM

* SEE NOTE 10 ON SHEET 1

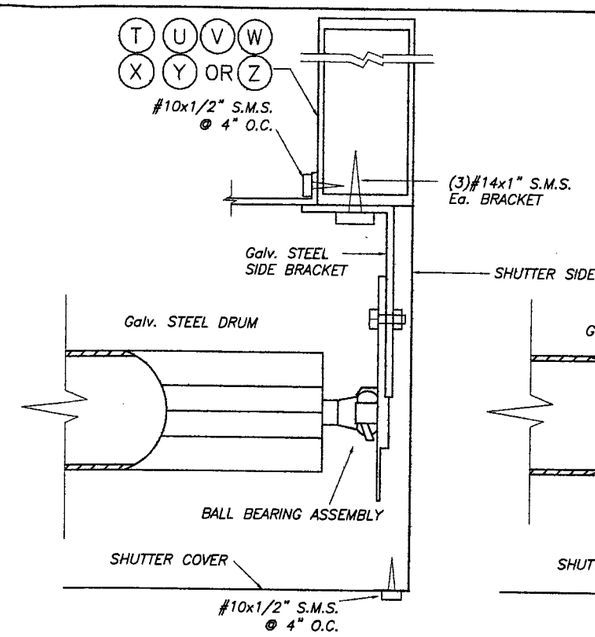

BRACKET DETAIL 1A

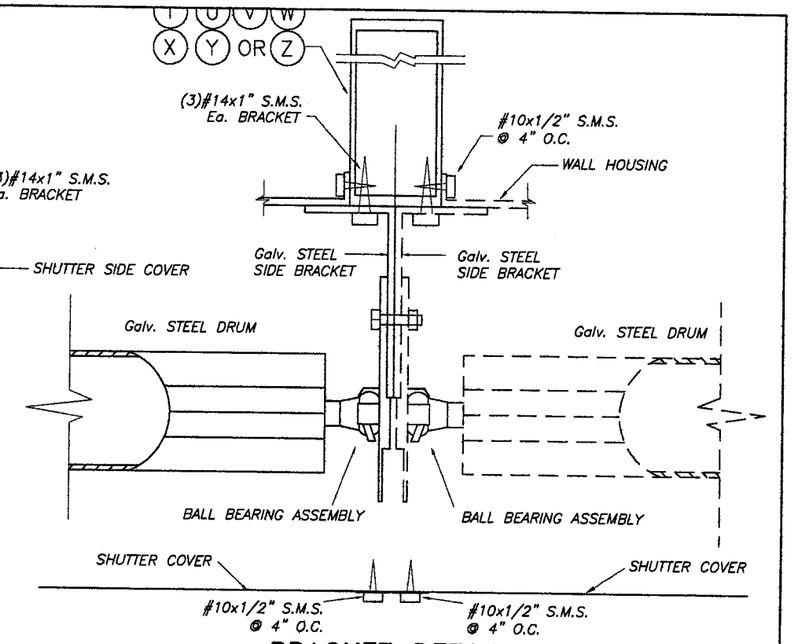

BRACKET DETAIL 2

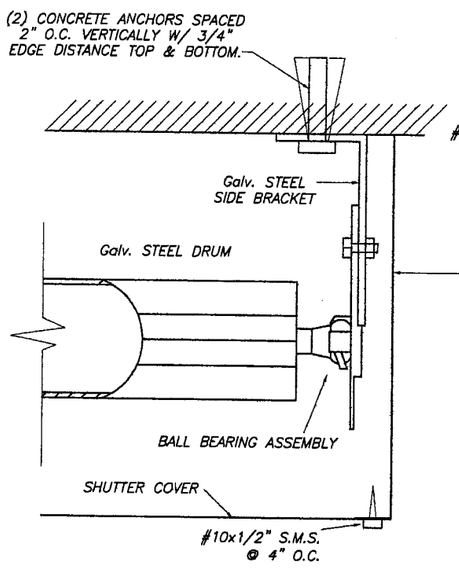

BRACKET DETAIL 1

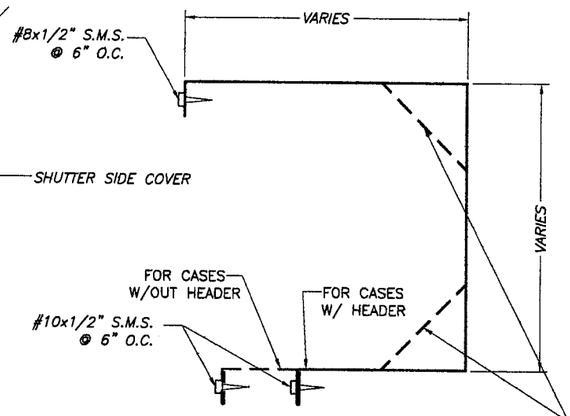

WALL HOUSING

SCALE: 3/16" = 1"
3105-H14 ALUMINUM ALLOY
THICKNESS: .032"

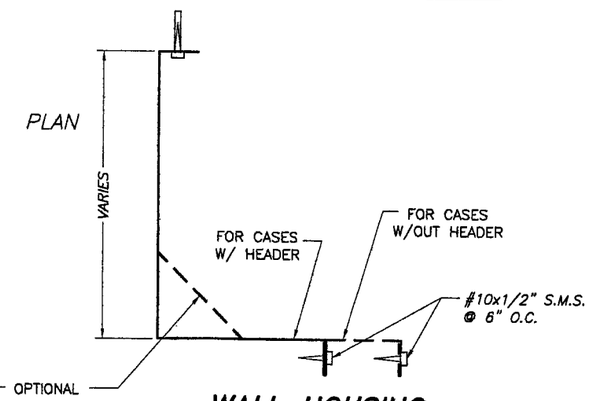

WALL HOUSING

SCALE: 3/16" = 1"
3105-H14 ALUMINUM ALLOY
THICKNESS: .032"

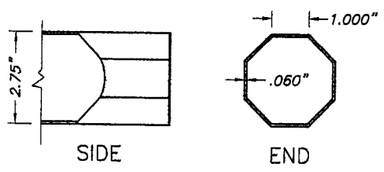

DRUM SCALE: 1/4" = 1"

1010 ELITE ROLLED STEEL F. E.
P. O. 1 Z 200 DESIGNATION
Ftu= 410 NW/MM2. % OF STRETCH
MINIMAL ON TEST. BAR OF 80 MM: 24 %
G-90 GALVANIZED COATING Thk.: .060"

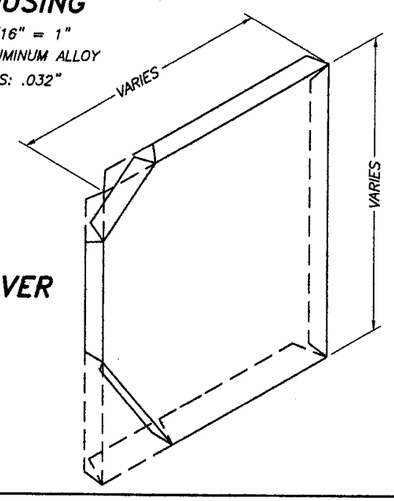

SHUTTER SIDE COVER

SCALE: 3/16" = 1"
3105-H14 ALUMINUM ALLOY
THICKNESS: .032"

10/20/05

PRODUCT RENEWED
as complying with the Florida
Building Code
Acceptance No. 05-1003.04
Expiration Date 05/20/08
By M Thach
Miami Dade Product Control
Division

F.B.C. (HIGH VELOCITY HURRICANE ZONE)

TILTECO INC.
TILLIT TESTING & ENGINEERING COMPANY
6355 N.W. 36th. St. Ste. 305, VIRGINIA GARDENS, FL. 33166
Phone : (305)871-1330 . Fax : (305)871-1331
EB-0006719
WALTER A. TILLIT Jr., P. E.
FLORIDA Lic. 44167

1200 SERIES EXTRUDED ROLL UP SHUTTERS

JORDAN'S ALUMINUM, INC.
5731 DEWEY STREET
HOLLYWOOD, FL. 33023

REV. NO	DESCRIPTION	DATE	REV. No	DESCRIPTION	DATE
1	–	–	3	–	–
2	–	–	4	–	–

DRAWN BY: M.C.V.
8/10/05 DATE
05-240 DRAWING No
SHEET 5 OF 21

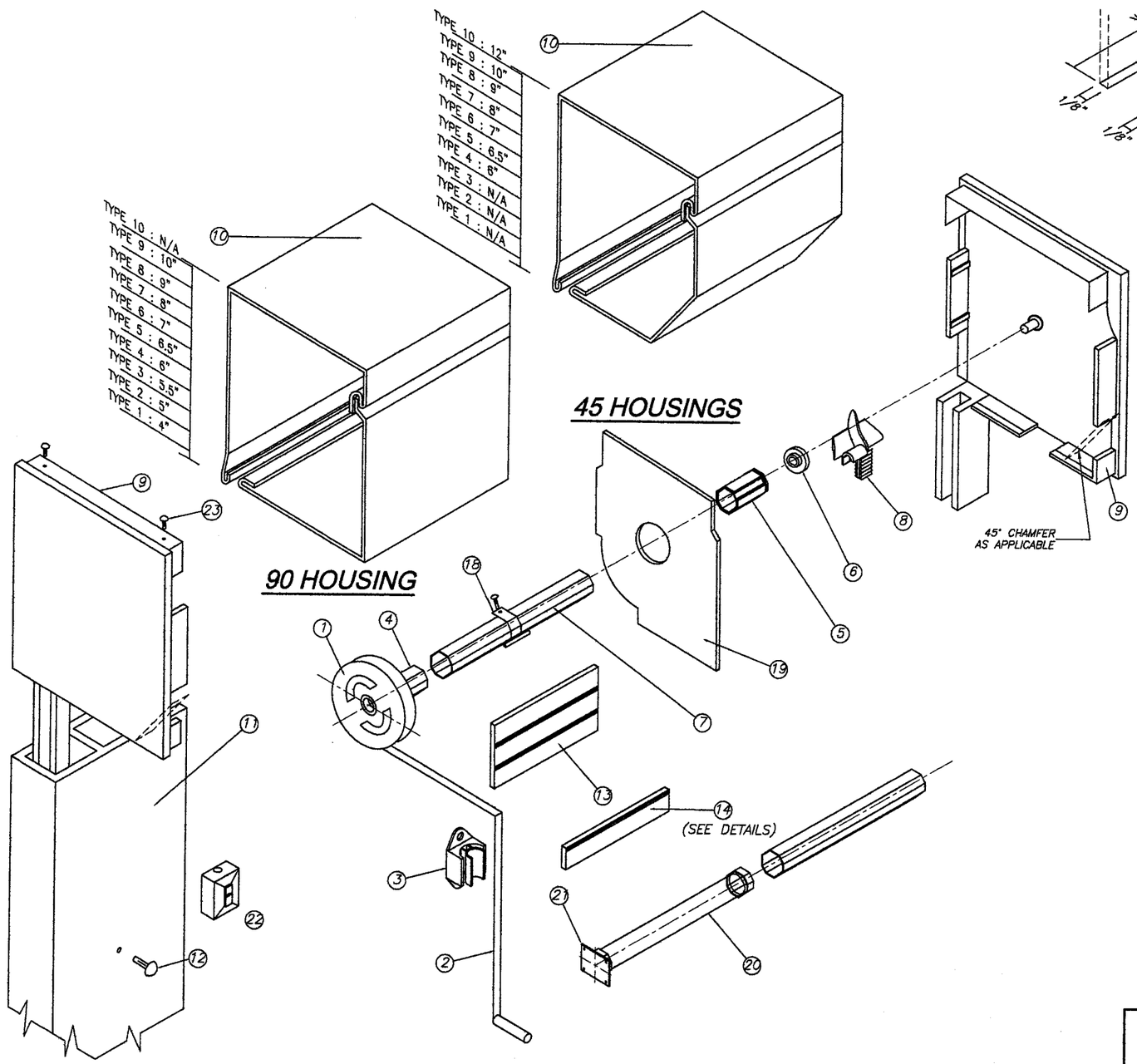

END CAP SYSTEM

(SEE NOTE 10 ON SHEET 1 OF 21)

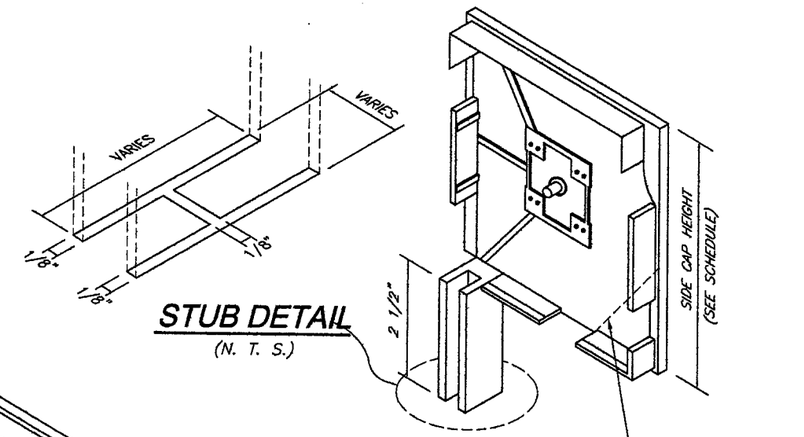

STUB DETAIL

(N. T. S.)

END CAPS:

(SEE NOTE 10 ON SHEET 1 OF 21)

COMPONENTS FOR GEAR OPERATED SYSTEM

1. GEAR
2. UNIVERSAL & CRANK
3. CRANK HOLDER(OPTIONAL)
4. GEAR INSERT (GEAR TO AXLE CONNECTOR)
5. IDLER INSERT
6. BALL BEARING
7. OCTAGONAL AXLE
8. ENTRY GUIDES
9. SIDE/END CAP
10. HOUSING (FRONT & BOTTOM), 0.040" THICK
11. SIDE RAIL
12. PLUG-BUTTOMS
13. ALUMINUM SLATS
14. BASE SLAT
15. PLASTIC STOPS(OPTIONAL)
16. SIDE LOCKS(OPTIONAL)
17. STAPLES(OPTIONAL)
18. SPRINGLOCK HANGER
19. SAFETY PLATES

ADDITIONAL COMPONENTS FOR MOTORIZED OPERATED SYSTEM

20. TUBULAR MOTOR
21. MOTOR BRACKET
22. SWITCH

FASTENERS

23. 3/16" ALUMINUM POP RIVETS(6 REQ'D EA. SIDE CAP) : 2 @ TOP, 2 @ REAR, 2@ BOTTOM

PRODUCT RENEWED
as complying with the Florida Buiding Code
Acceptance No 05-1003.04
Expiration Date 05/20/08
By M Thark
Miami Dade Product Control Division

F.B.C. (HIGH VELOCITY HURRICANE ZONE)

10/20/05

TILTECO INC.
TILLIT TESTING & ENGINEERING COMPANY
6355 N.W. 36th. St., Ste. 305, VIRGINIA GARDENS, FL 33166
Phone : (305)871-1530 . Fax : (305)871-1531
EB-0006719
WALTER A. TILLIT Jr., P. E.
FLORIDA Lic. 44167

1200 SERIES EXTRUDED ROLL UP SHUTTERS

JORDAN'S ALUMINUM, INC.
5731 DEWEY STREET
HOLLYWOOD, FL. 33023

REV. NO	DESCRIPTION	DATE	REV. No	DESCRIPTION	DATE
1	-	-	3	-	-
2	-	-	4	-	-

DRAWN BY: M.C.V.
8/10/05 DATE
05-240 DRAWING No
SHEET 6 OF 21

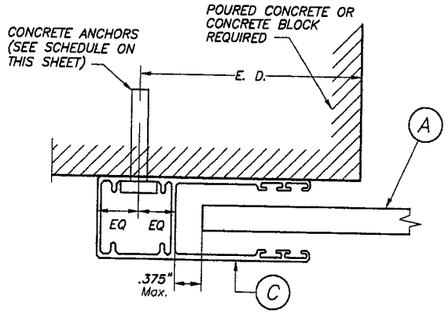

SECTION P – P (1) : WALL MOUNT

SCALE: 1/2" = 1"

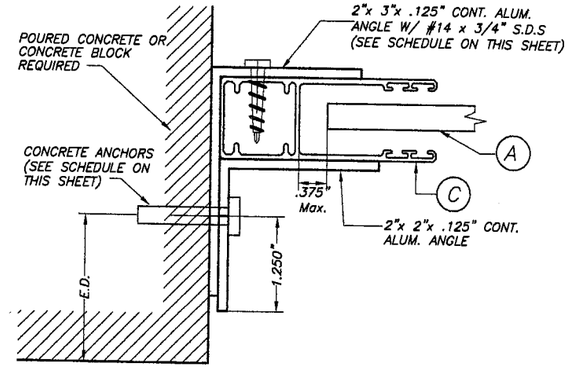

SECTION P – P (2) : INSIDE WALL MOUNT

SCALE: 1/2" = 1"

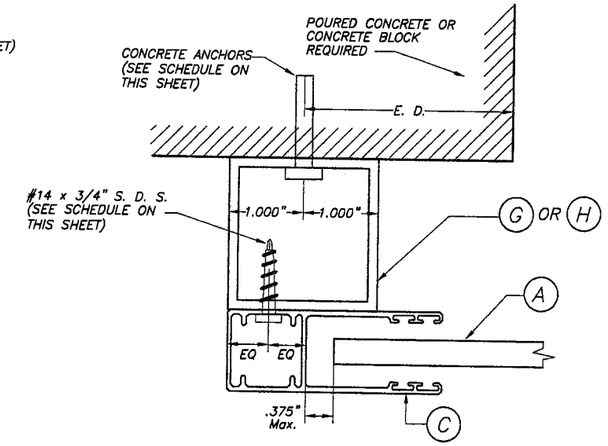

SECTION P – P (3) : BUILD-OUT MOUNT

SCALE: 1/2" = 1"

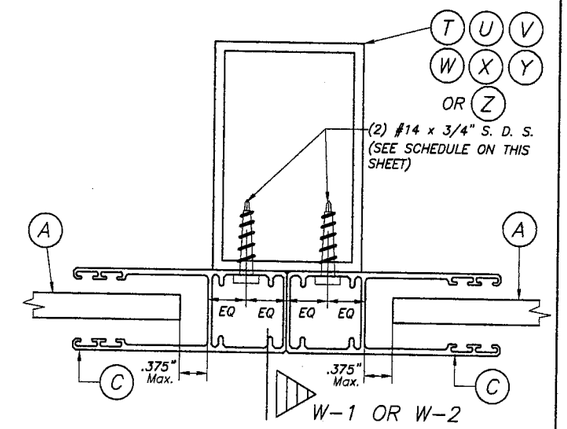

SECTION R – R : MULLION MOUNT (FACE MOUNT)

SCALE: 1/2" = 1"

MAXIMUM DESIGN PRESSURE RATING "W" (p. s. f.) AND SIDE RAIL ANCHOR SCHEDULE CORRESPONDING MAXIMUM ANCHOR SPACING(in) * FOR SIDE RAIL (C) CONNECTION TO POURED CONCRETE OR CONCRETE BLOCK WALL

(USE MAXIMUM VALUES BETWEEN POSITIVE AND NEGATIVE LOAD)

MAXIMUM DESIGN LOAD "W" (p.s.f.)	SIDE RAIL (C) TO POURED CONCRETE OR CONCRETE BLOCK WALL						SIDE RAIL (C) CONNECTION TO B.O. TUBE OR MULLION OR 2" x 3" Ls		
	REGULAR TAPCON			CRETE-FLEX SS4			#14 x 3/4" S.D.S.		
	WALL MOUNT	INSIDE MOUNT	BUILD-OUT MOUNT	WALL MOUNT	INSIDE MOUNT	BUILD-OUT MOUNT	FACE MOUNT	INSIDE MOUNT	BUILD-OUT MOUNT
80 OR LESS	13 1/2"	11 1/2"	12 1/2"	13 1/2"	13 1/2"	12 1/2"	7 1/2" O.C.		
	13 1/2"	6"	8"	13 1/2"	7 1/2"	11"			
>80 TO 150	12"	7 1/2"	11 1/2"	13 1/2"	10"	12 1/2"	4" O.C.		
	5 1/2"	4"	5"	7 1/2"	5"	7"			
>150 TO 195	9"	6"	10"	11 1/2"	8"	12 1/2"	3" O.C.		
	4"	3"	4 1/2"	5 1/2"	4"	6"			

CONCRETE BLOCK
POURED CONCRETE

SUBSTRATE LEGEND

* MAXIMUM ANCHOR SPACING (in.) AT SIDE RAIL VERSUS EDGE DISTANCE = E. D.

+ MAXIMUM ANCHOR SPACING ARE VALID FOR 3 1/2" EDGE DISTANCE. FOR E. D. LESS THAN 3 1/2", REDUCE ANCHOR SPACING BY MULTIPLYING SPACING SHOWN ON SCHEDULE BY THE FOLLOWING FACTORS (REDUCED SPACING OBTAINED USING FACTORS SHALL NOT BE LESS THAN 3"):

ACTUAL E. D.	FACTOR
3"	.86
2 1/2"	.75
2"	.50

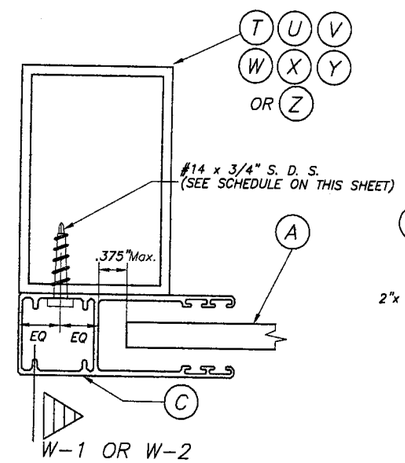

SECTION Q – Q : MULLION MOUNT (FACE MOUNT)

SCALE: 1/2" = 1"

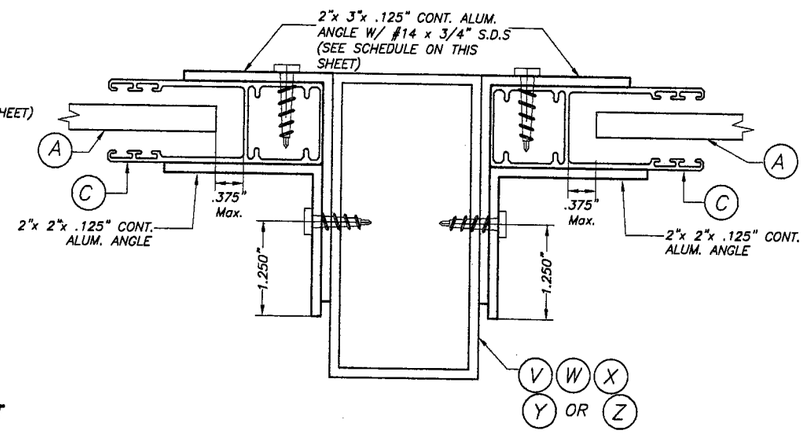

SECTION R – R : MULLION MOUNT (INSIDE MOUNT)

SCALE: 1/2" = 1"

PRODUCT RENEWED
as complying with the Florida Building Code
Acceptance No. 05-1003.04
Expiration Date 05/20/08
By M. Thal
Miami Dade Product Control Division

F.B.C. (HIGH VELOCITY HURRICANE ZONE)

10/20/05

TILTECO INC.
TILLIT TESTING & ENGINEERING COMPANY
6355 N.W. 36th St., Ste. 305, VIRGINIA GARDENS, Fl. 33166
Phone : (305)871-1530 . Fax : (305)871-1531
EB-0006719
WALTER A. TILLIT Jr., P. E.
FLORIDA Lic. 44167

1200 SERIES EXTRUDED ROLL UP SHUTTERS

JORDAN'S ALUMINUM, INC.
5731 DEWEY STREET
HOLLYWOOD, FL. 33023

REV. NO	DESCRIPTION	DATE	REV. No	DESCRIPTION	DATE
1	BUILD-OUT TUBE "h"	10/19/05	3		
2			4		

DRAWN BY: M.C.V. / L.G.
8/10/05 DATE
05-240 DRAWING No
SHEET 7 OF 21

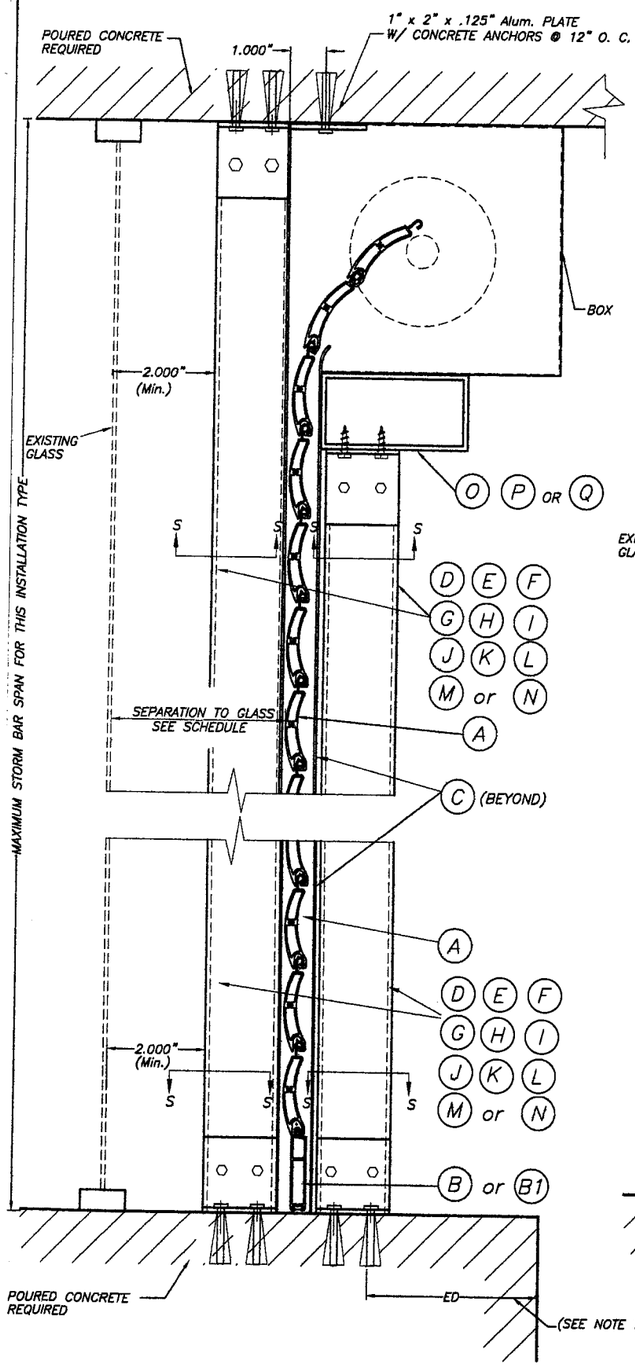

CEILING & FLOOR MOUNTING SECTION V-V(2) INSTALLATION W/ FIXED OR REMOVABLE STORM BARS W/ CONCRETE ANCHORS

(SEE SECTION "S" ON SHEET 9 FOR ANCHOR TYPE REQUIREMENT)

SCALE : 1/4" = 1"

SINGLE SPAN SECTIONS AND DETAILS ARE SIMILAR TO ABOVE SHOWN WITHOUT STORM BAR & HEADERS.

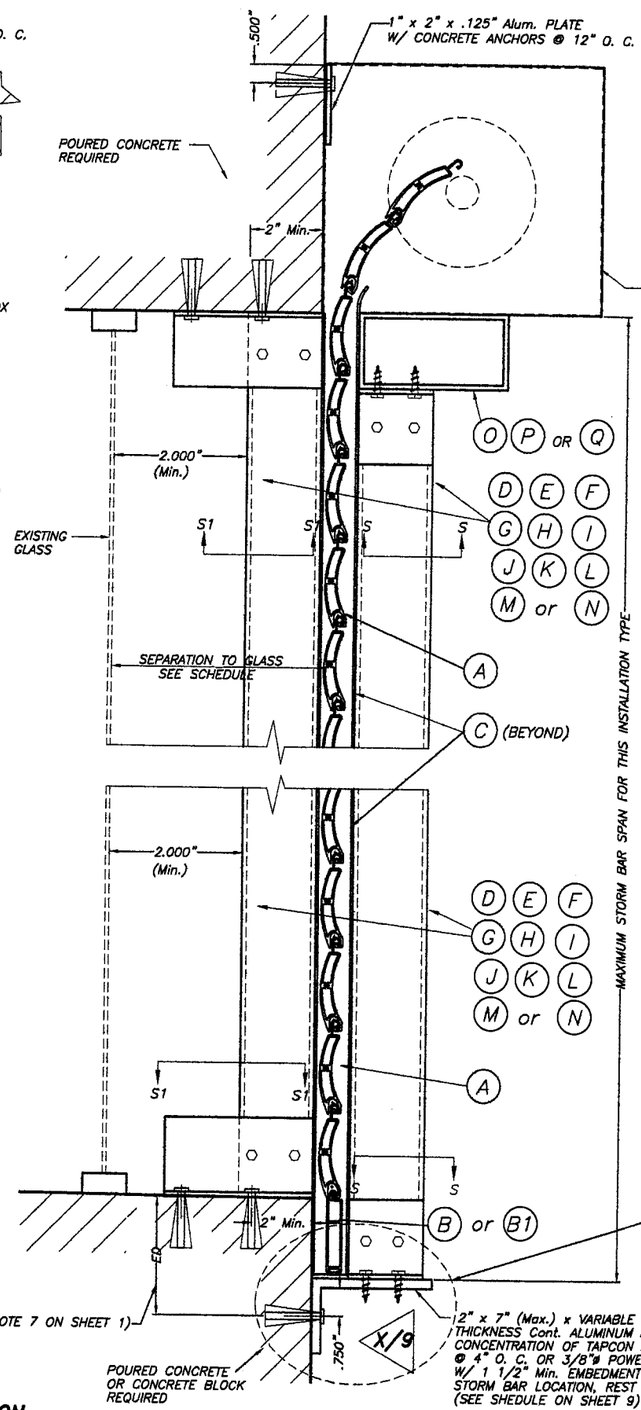

WALL MOUNTING SECTION V-V(1) INSTALLATION W/ FIXED STORM BARS W/ CONCRETE ANCHORS

(SEE SECTION "S" AND "S1" ON SHEET 9 FOR ANCHOR TYPE REQUIREMENT)

SCALE : 1/4" = 1"

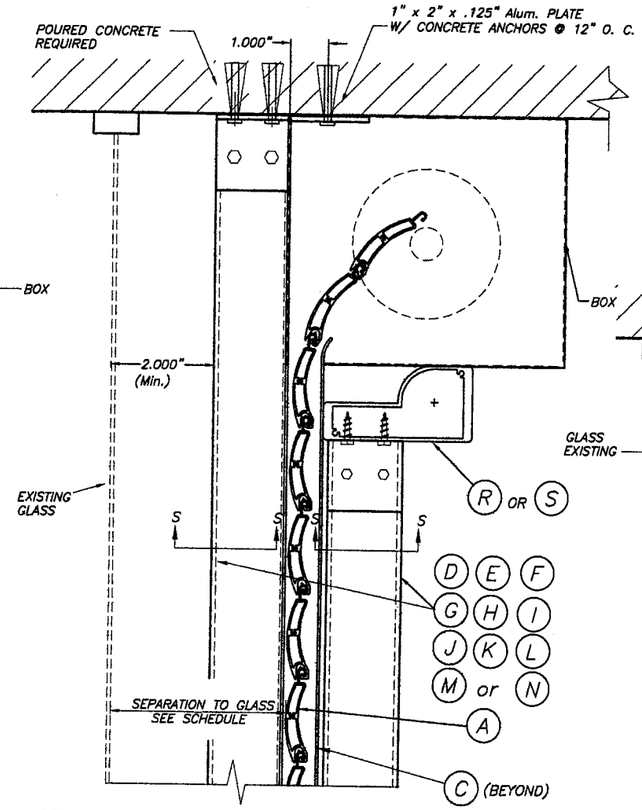

CEILING MOUNTING SECTION V-V(2) INSTALLATION W/ FIXED OR REMOVABLE STORM BARS W/ W/ FIXED OR REMOVABLE STORM BARS W/

(SEE SECTION "S" ON SHEET 9 FOR ANCHOR TYPE REQUIREMENT)

SCALE : 1/4" = 1"

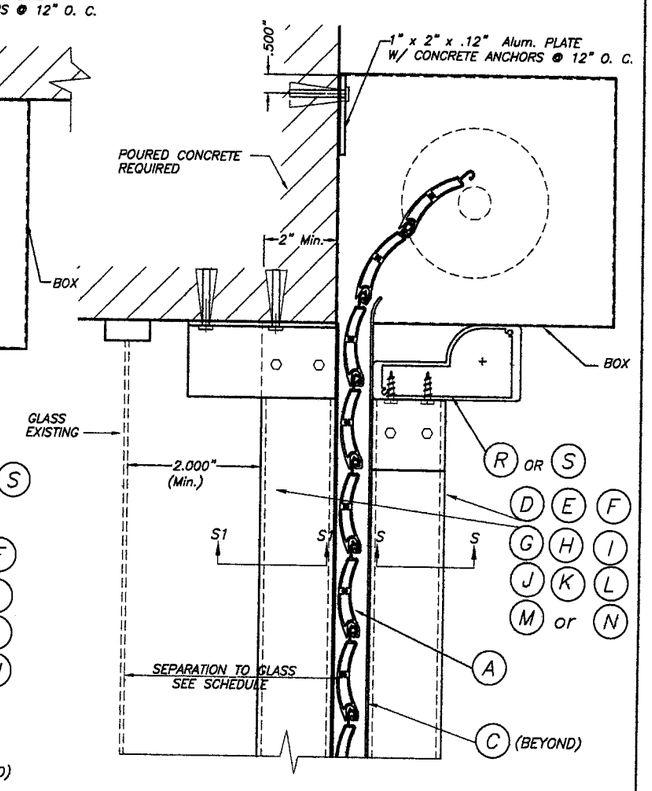

WALL MOUNTING SECTION V-V(1) INSTALLATION W/ FIXED STORM BARS W/ CONCRETE ANCHORS

(SEE SECTION "S" AND "S1" ON SHEET 9 FOR ANCHOR TYPE REQUIREMENT)

SCALE : 1/4" = 1"

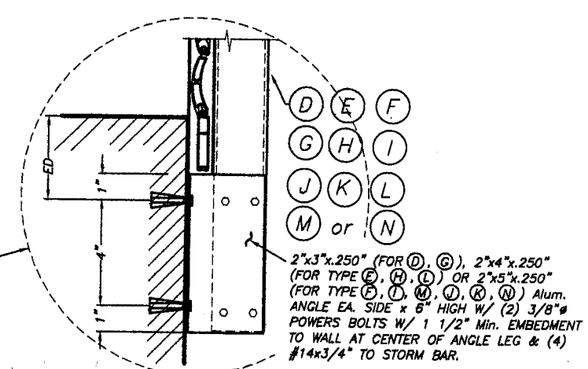

OPTIONAL STORM BAR CONNECTION

PRODUCT RENEWED
as complying with the Florida
Building Code
Application No. 05-1003.04
Expiration Date 05/22/08
By: M. Shall
Miami-Dade Product Control
Division

F.B.C. (HIGH VELOCITY HURRICANE ZONE)

SECTIONS V – V

10/20/05

TILTECO INC.
TILLIT TESTING & ENGINEERING COMPANY
6355 N.W. 36th St., Ste. 305, VIRGINIA GARDENS, FL 33166
Phone : (305)871-1530 . Fax : (305)871-1531
EB-0006719
WALTER A. TILLIT Jr., P. E.
FLORIDA Lic. 44167

1200 SERIES EXTRUDED ROLL UP SHUTTERS

JORDAN'S ALUMINUM, INC.
5731 DEWEY STREET
HOLLYWOOD, FL. 33023

REV. NO	DESCRIPTION	DATE	REV. No	DESCRIPTION	DATE
1	–	–	3	–	–
2	–	–	4	–	–

DRAWN BY: M.C.V.
8/10/05 DATE
05-240 DRAWING No
SHEET 8 OF 21

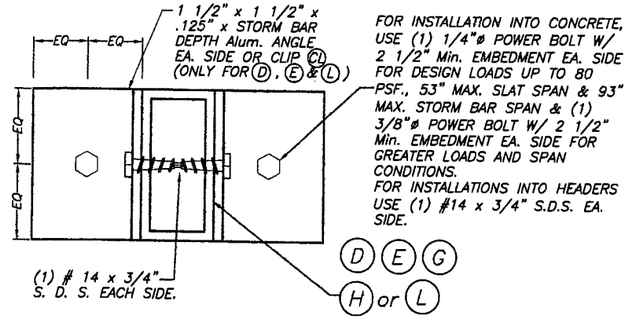

SECTION S – S (FOR FIXED STORM BAR)

SCALE : 1/2" = 1"

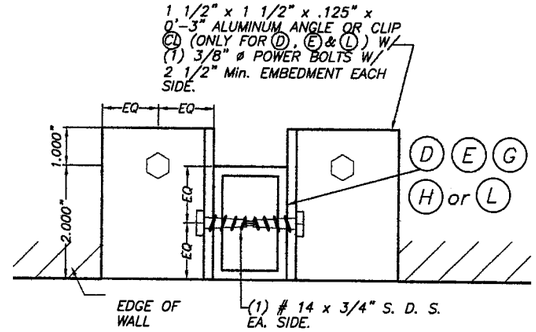

SECTION S1 – S1

SCALE : 1/2" = 1"

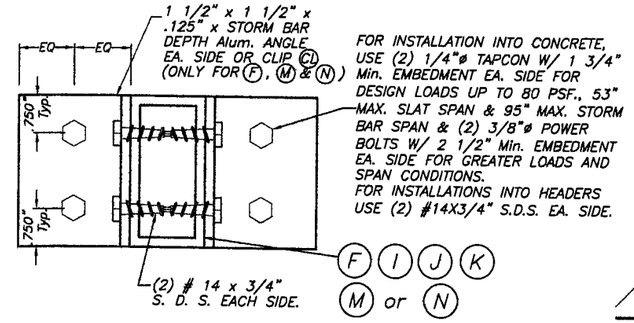

SECTION S – S (FOR FIXED STORM BAR)

SCALE : 1/2" = 1"

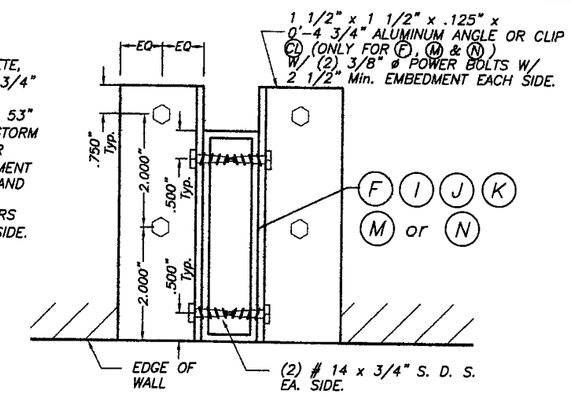

SECTION S1 – S1

SCALE : 1/4" = 1"

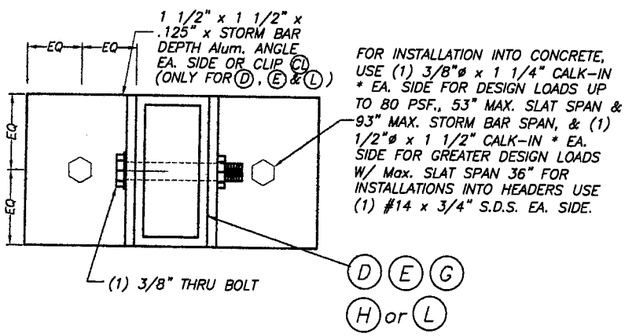

SECTION S – S (FOR REMOVABLE STORM BAR)

SCALE : 1/2" = 1"

* 3/8"ø–16 M.D.S. OR 1/2"ø–13 M.D.S. USED JOINTLY W/ 3/8" ø x 1 1/4" CALK–IN OR 1/2"ø x 1 1/2" CALK–IN ANCHORS RESPECTIVELY SHALL BE LEFT TOGETHER W/ ANCHORS AT THE TIME STORM BARS ARE REMOVED. (SEE DET. A).

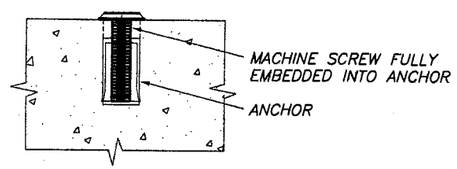

DETAIL A

SCALE : 1/2" = 1"

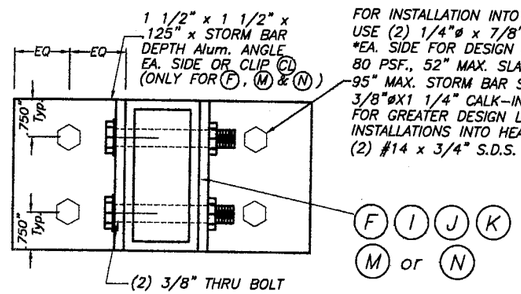

SECTION S – S (FOR REMOVABLE STORM BAR)

SCALE : 1/2" = 1"

* 1/4" ø–20 OR 3/8" ø–16 M.D.S. USED JOINTLY W/ 1/4" ø x 7/8" OR 3/8" ø x 1 1/4" CALK–IN ANCHORS RESPECTIVELY SHALL BE LEFT TOGETHER W/ ANCHORS AT THE TIME STORM BARS ARE REMOVED. (SEE DET. A).

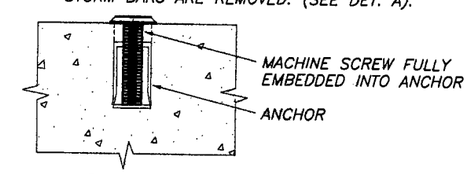

DETAIL A

SCALE : 1/2" = 1"

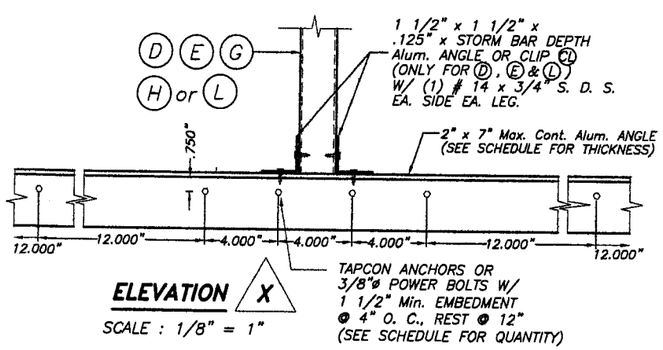

ELEVATION X

SCALE : 1/8" = 1"

ANCHOR & ANGLE SCHEDULE FOR ELEVATION X		
DESIGN LOAD (psf)	ANCHOR TYPE & QUANTITY	ANGLE THICKNESS
72.0 OR LESS **	(6) 1/4" ø TAPCONS	1/8"
195 OR LESS	(4) 3/8" ø POWER BOLTS	1/4"

** W/ 4'–0" Max. SLAT SPAN & 8'–0" MAX. STORM BAR SPAN

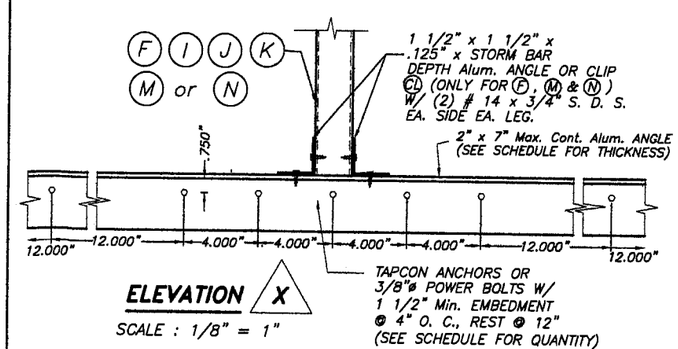

ELEVATION X

SCALE : 1/8" = 1"

ANCHOR & ANGLE SCHEDULE FOR ELEVATION X		
DESIGN LOAD (psf)	ANCHOR TYPE & QUANTITY	ANGLE THICKNESS
72.0 OR LESS **	(6) 1/4" ø TAPCONS	1/8"
195 OR LESS	(5) 3/8" ø POWER BOLTS	1/4"

** W/ 4'–0" Max. SLAT SPAN & 8'–0" MAX. STORM BAR SPAN

PRODUCT RENEWED
as complying with the Florida
Building Code
Acceptance No 05-1003.04
Expiration Date 05/20/08
By M Thach
Miami Dade Product Control
Division

STORM BARS TYPE: 1, 2, 4, 5 & 9

STORM BARS TYPE: 3, 6, 7, 8, 10 & 11

F.B.C. (HIGH VELOCITY HURRICANE ZONE)

10/20/05

TILTECO INC.
TILLIT TESTING & ENGINEERING COMPANY
6355 N.W. 36th. St. Ste. 305, VIRGINIA GARDENS, FL 33166
Phone : (305)871-1530 . Fax : (305)871-1531
EB-0006719
WALTER A. TILLIT Jr., P. E.
FLORIDA Lic. 44167

1200 SERIES EXTRUDED ROLL UP SHUTTERS

JORDAN'S ALUMINUM, INC.
5731 DEWEY STREET
HOLLYWOOD, FL. 33023

REV. NO	DESCRIPTION	DATE	REV. No	DESCRIPTION	DATE
1	–	–	3	–	–
2	–	–	4	–	–

DRAWN BY: M.C.V.
8/10/05 DATE
05-240 DRAWING No
SHEET 9 OF 21

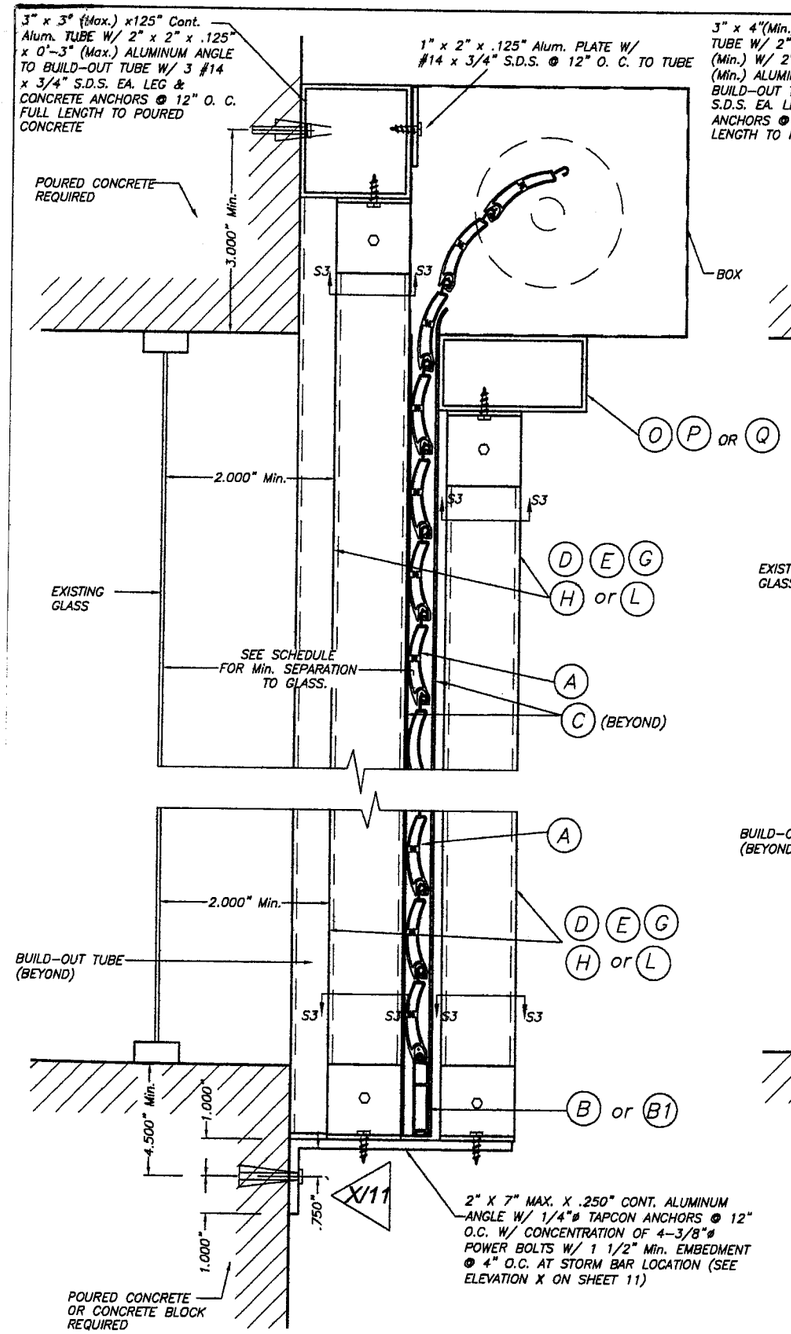

CASE I

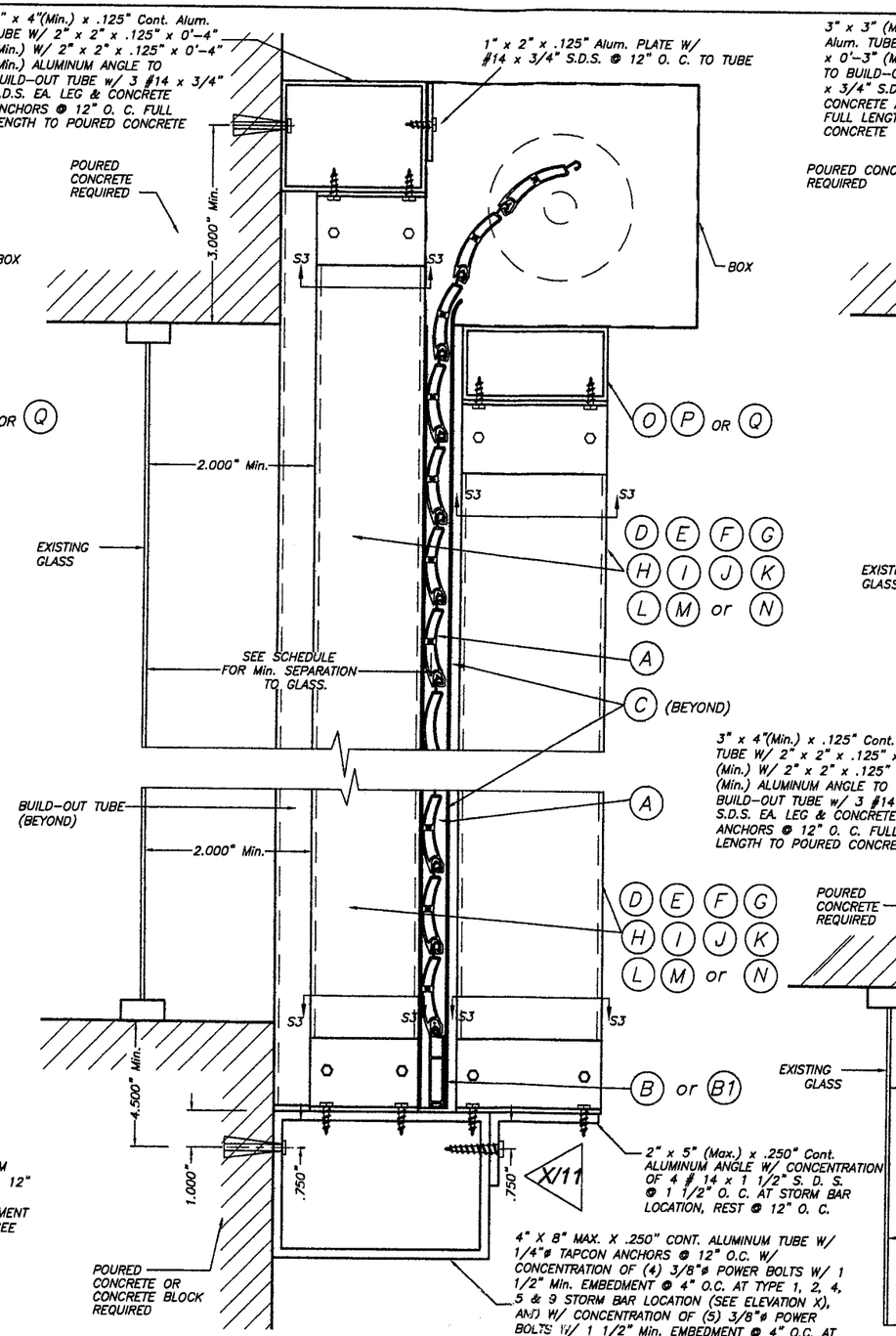

CASE II

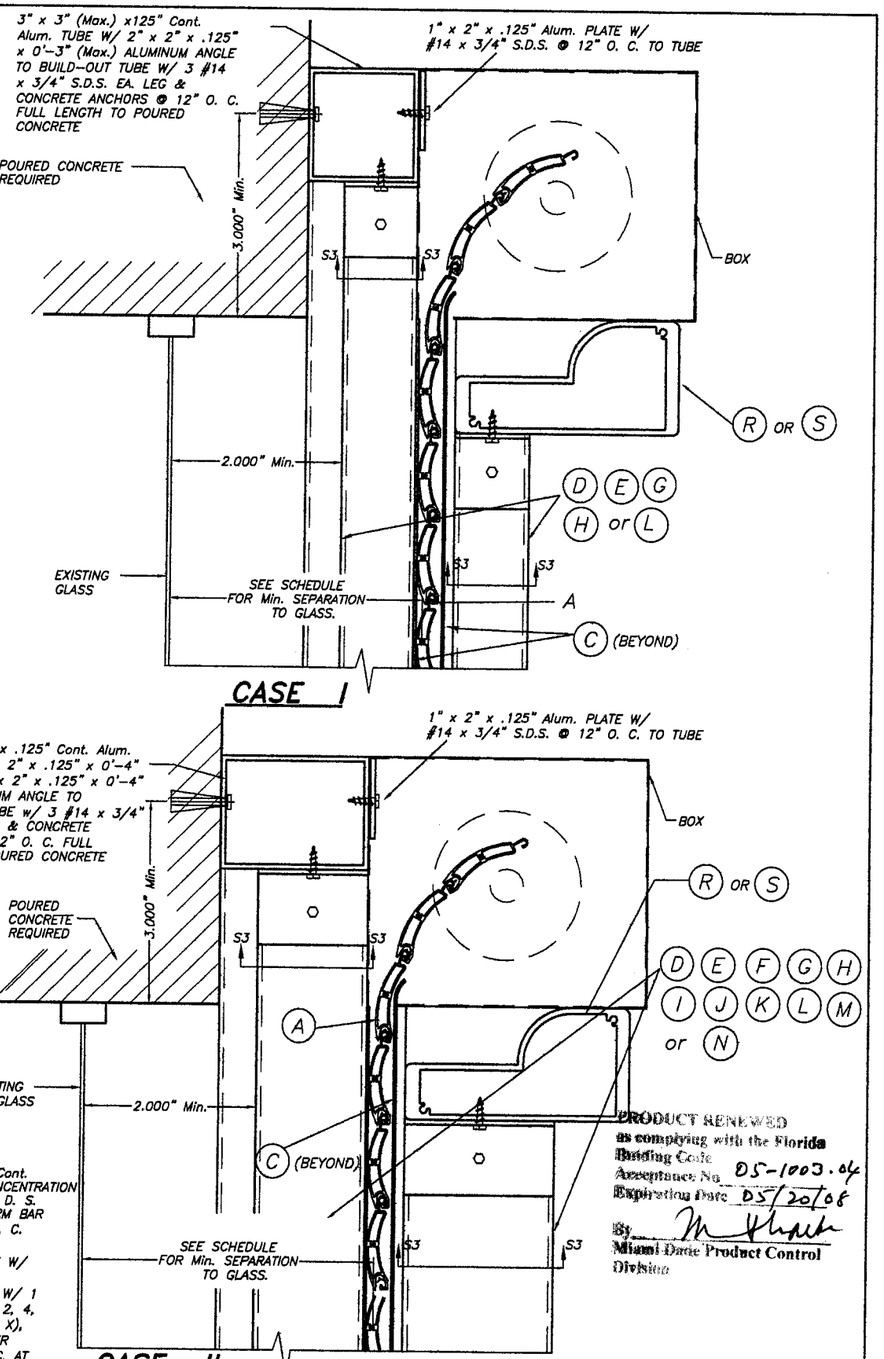

CASE I

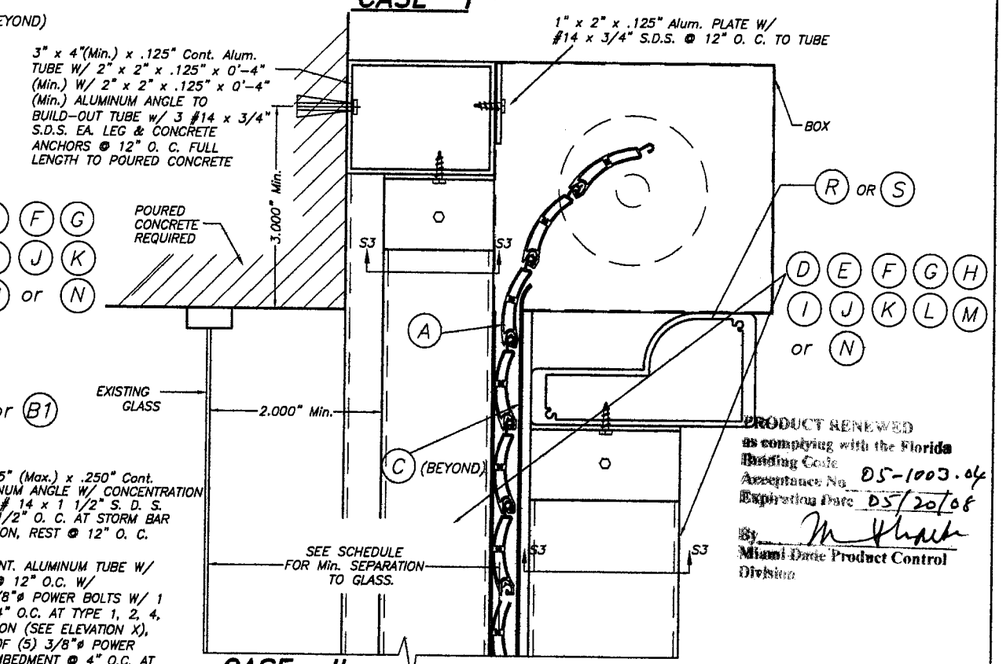

CASE II

PRODUCT RENEWED
as complying with the Florida Building Code
Acceptance No. 05-1003.04
Expiration Date 05/20/08
By M. Khach
Miami-Dade Product Control Division

F.B.C. (HIGH VELOCITY HURRICANE ZONE)

FIXED STORM BAR CONNECTION AT BUILD-OUT INSTALLATIONS W/SHEET METAL SCREWS

(SEE SECTION "S3" ON SHEET 11 FOR ANCHORS REQUIRED).

SCALE : 1/4" = 1"

NOTE:
SINGLE SPAN SECTIONS AND DETAILS ARE SIMILAR TO ABOVE SHOWN WITHOUT STORM BAR & HEADERS.

SECTIONS V - V

10/20/05

TILTECO INC.
TILLIT TESTING & ENGINEERING COMPANY
6355 N.W. 36th. St. Ste. 305, VIRGINIA GARDENS, FL 33166
Phone : (305)871-1530 . Fax : (305)871-1531
EB-0006719
WALTER A. TILLIT Jr., P. E.
FLORIDA Lic. 44167

1200 SERIES EXTRUDED ROLL UP SHUTTERS

JORDAN'S ALUMINUM, INC.
5731 DEWEY STREET
HOLLYWOOD, FL. 33023

REV. NO	DESCRIPTION	DATE	REV. No	DESCRIPTION	DATE
1	–	–	3	–	–
2	–	–	4	–	–

DRAWN BY: M.C.V.
8/10/05 DATE
05-240 DRAWING No
SHEET 10 OF 21

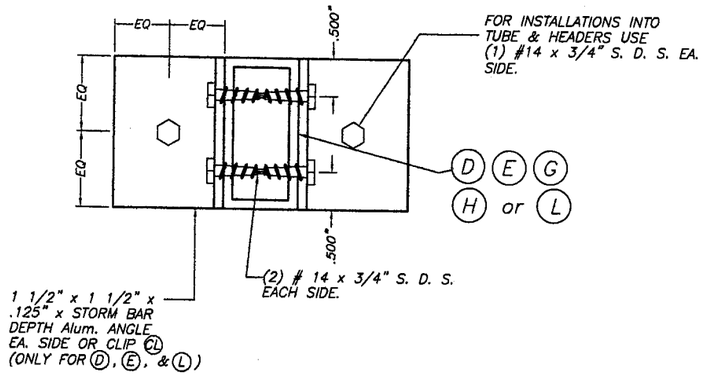

SECTION S3 – S3

SCALE : 1/2" = 1"

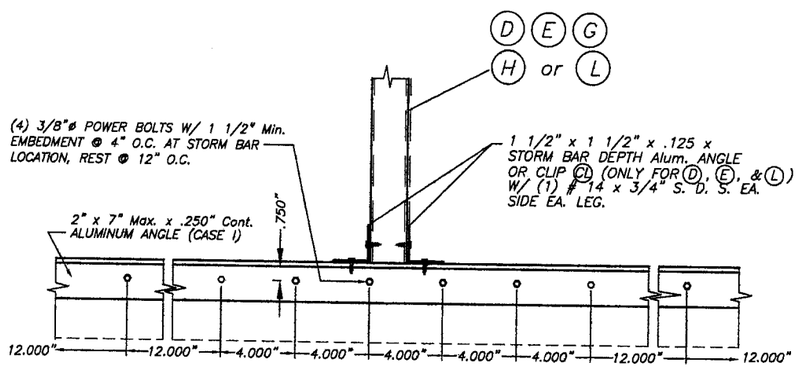

ELEVATION X

SCALE : 1/8" = 1"

CASE I

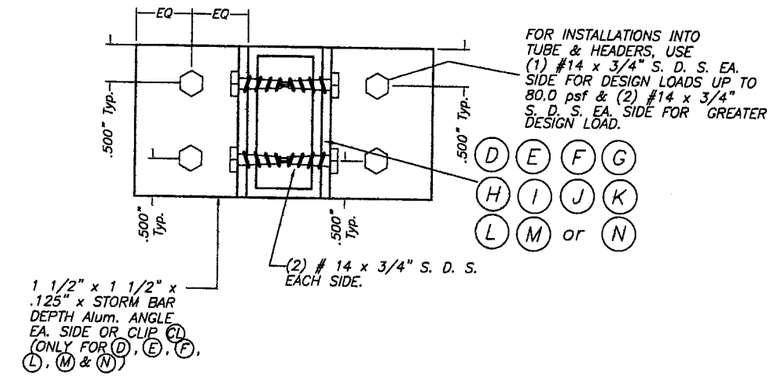

SECTION S3 – S3

SCALE : 1/2" = 1"

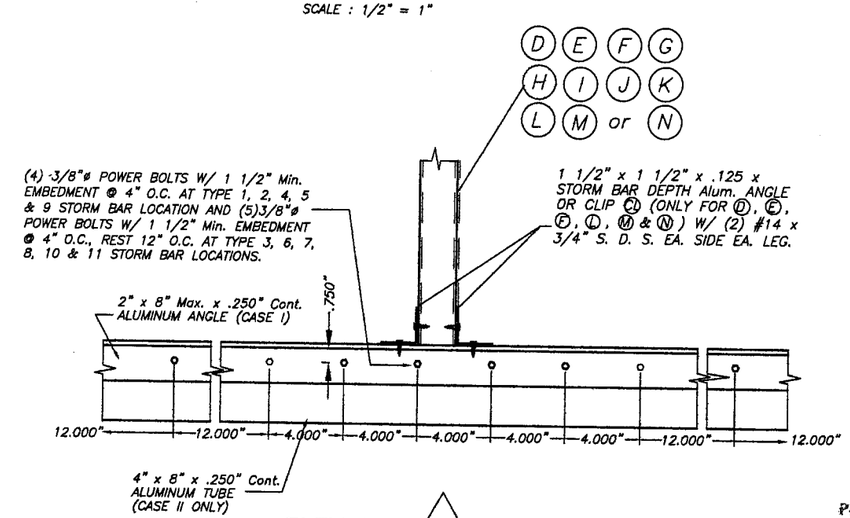

ELEVATION X

SCALE : 1/8" = 1"

CASE II

PRODUCT RENEWED
as complying with the Florida Building Code
Acceptance No. 05-1003.04
Expiration Date 05/20/08
By: M. Thach
Miami Dade Product Control Division

F.B.C. (HIGH VELOCITY HURRICANE ZONE)

10/20/05

TILTECO INC.
TILLIT TESTING & ENGINEERING COMPANY
6355 N.W. 36th. St. Ste. 305, VIRGINIA GARDENS, FL 33166
Phone : (305)871-1530 . Fax : (305)871-1531
EB-0006719
WALTER A. TILLIT Jr., P. E.
FLORIDA Lic. 44167

1200 SERIES EXTRUDED ROLL UP SHUTTERS

JORDAN'S ALUMINUM, INC.
5731 DEWEY STREET
HOLLYWOOD, FL. 33023

REV. NO	DESCRIPTION	DATE	REV. No	DESCRIPTION	DATE
1	–	–	3	–	–
2	–	–	4	–	–

DRAWN BY: M.C.V.
8/10/05 DATE
05-240 DRAWING No
SHEET 11 OF 21

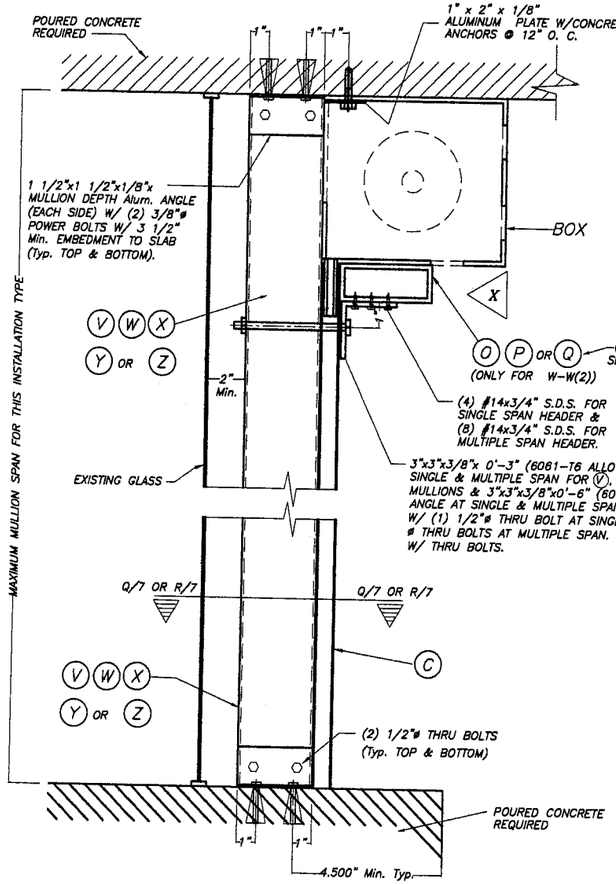

FLOOR/CEILING MOUNTING : SECTION W-W (1), W/O HEADER SECTION W-W (2), W/ HEADER

SCALE : 1/8" = 1"

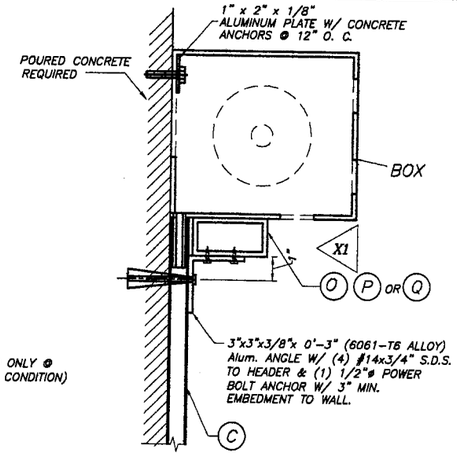

ALTERNATIVE 1 WALL MOUNTING : SECTION W-W(3)

SCALE : 1/8" = 1"

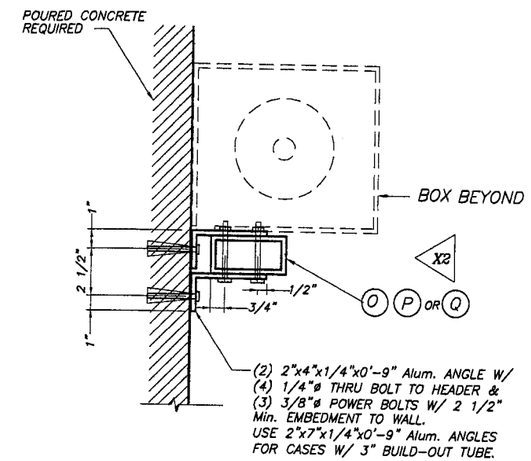

ALTERNATIVE: 2 WALL MOUNTING : SECTION W-W(3)

SCALE : 1/8" = 1"

NOTE: VALID FOR ALL SPANS AND LOAD COMBINATIONS

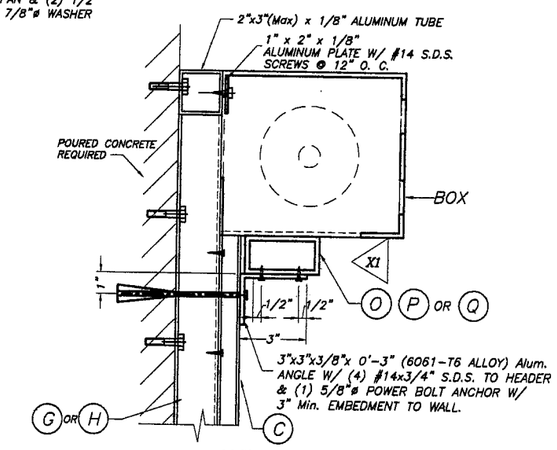

ALTERNATIVE 1A BUILD-OUT MOUNTING : SECTION W-W(3)

SCALE : 1/8" = 1"

NOTE : (ALTERNATIVE 1 OR 1A)
THIS INSTALLATION IS ONLY VALID FOR STORM BARS WITH Max. SPAN = 8'-0", HEADERS WITH 12'-0" Max. SINGLE SPAN & 80 psf MAXIMUM DESIGN LOAD OR FOR STORM BARS WITH MAX. SPAN=6'-0", HEADERS WITH 15'-0" MAX. SINGLE SPAN & 80 p.s.f. MAXIMUM DESIGN LOAD.

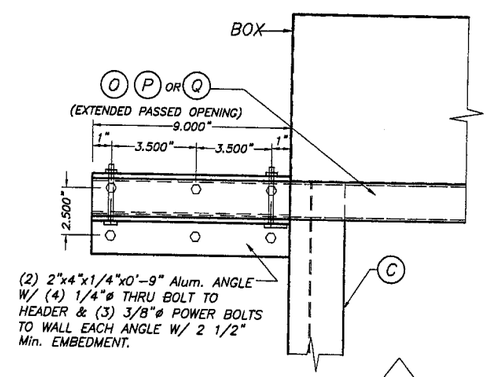

ELEVATION X2

SCALE : 1/8" = 1"

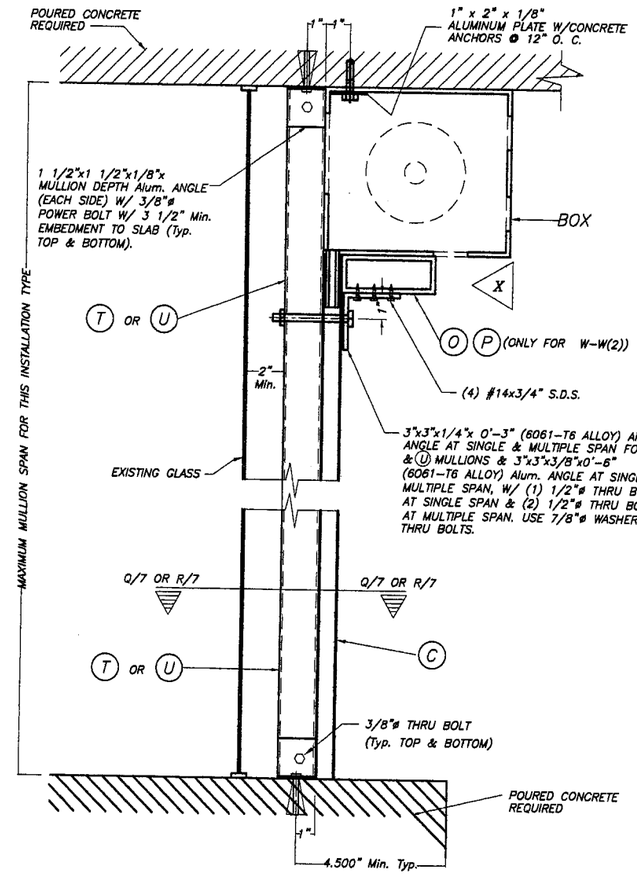

FLOOR/CEILING MOUNTING : SECTION W-W (1), W/O HEADER SECTION W-W (2), W/ HEADER

NOTE: THIS MOUNTING IS VALID ONLY FOR UP TO 75 psf DESIGN LOAD.

SCALE : 1/8" = 1"

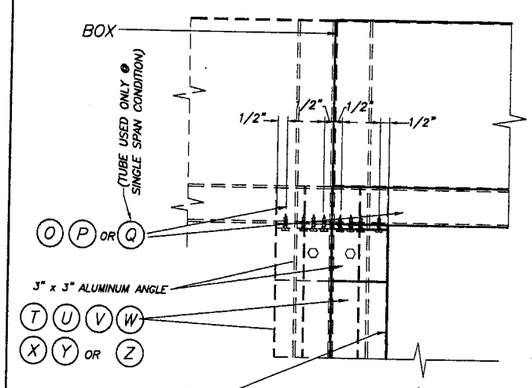

ELEVATION X

SCALE : 1/8" = 1"

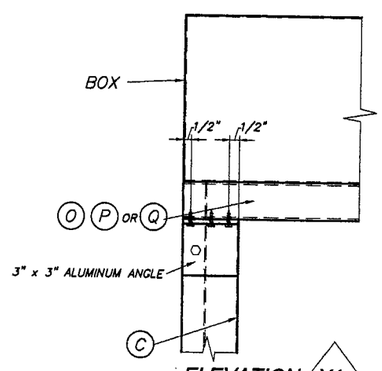

ELEVATION X1

SCALE : 1/8" = 1"

10/20/05

TYPICAL HEADER CONNECTION AT ENDS: SECTIONS W-W

PRODUCT RENEWED
as complying with the Florida Building Code
Acceptance No. 05-1003.04
Expiration Date 03/20/08
By
Miami Dade Product Control Division

F.B.C. (HIGH VELOCITY HURRICANE ZONE)

TILTECO INC.
TILLIT TESTING & ENGINEERING COMPANY
6355 N.W. 36th. St. Ste. 305, VIRGINIA GARDENS, Fl. 33166
Phone : (305)871-1530 . Fax : (305)871-1531
EB-0006719
WALTER A. TILLIT Jr., P. E.
FLORIDA Lic. 44167

1200 SERIES EXTRUDED ROLL UP SHUTTERS

JORDAN'S ALUMINUM, INC.
5731 DEWEY STREET
HOLLYWOOD, FL. 33023

REV. NO	DESCRIPTION	DATE	REV. No	DESCRIPTION	DATE
1	ALTERNATIVE 1A B.O. MOUNT	10/19/05	3		
2			4		

DRAWN BY: M.C.V. / L.G.
DATE: 8/10/05
DRAWING No: 05-240
SHEET 12 OF 21

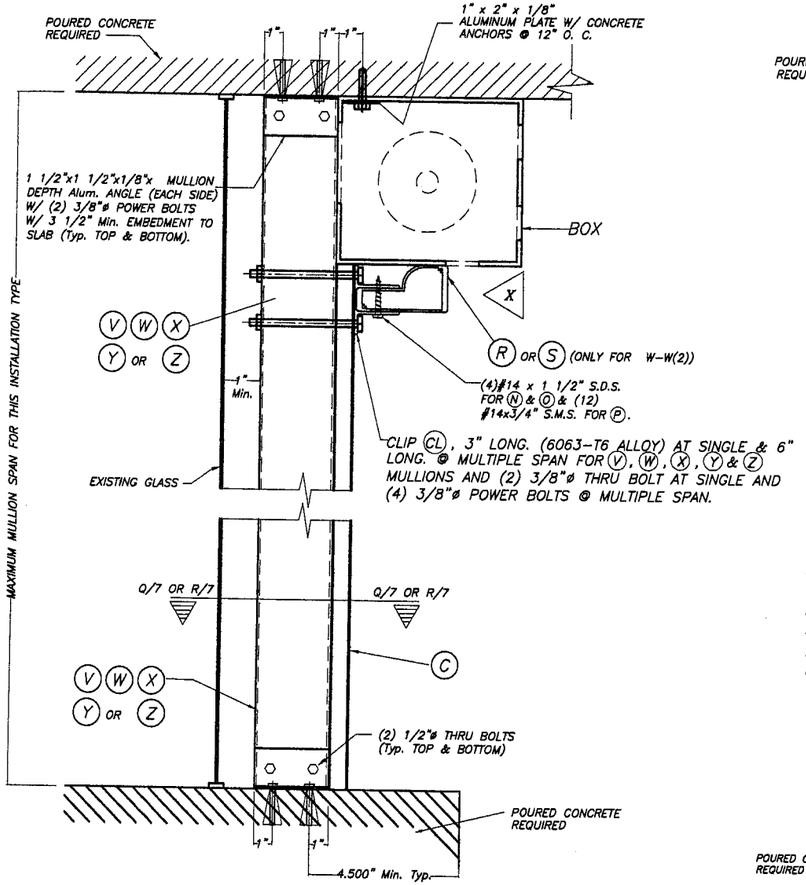

FLOOR/CEILING MOUNTING : SECTION W-W (1), W/O HEADER SECTION W-W (2), W/ HEADER

SCALE : 1/8" = 1"

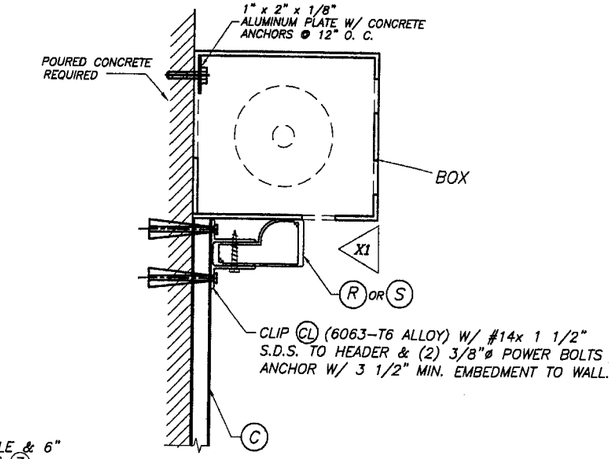

ALTERNATIVE: 1 WALL MOUNTING : SECTION W-W (3)

SCALE : 1/8" = 1"

NOTE :
THIS INSTALLATION IS ONLY VALID FOR STORM BARS WITH Max. SPAN = 8'-0", HEADERS WITH 9'-3" Max. SINGLE SPAN & 80 psf MAXIMUM DESIGN LOAD OR FOR STORM BARS WITH MAX. SPAN=6'-0"; HEADERS WITH 13'-0" MAX. SINGLE SPAN & 80 p.s.f. MAXIMUM DESIGN LOAD.

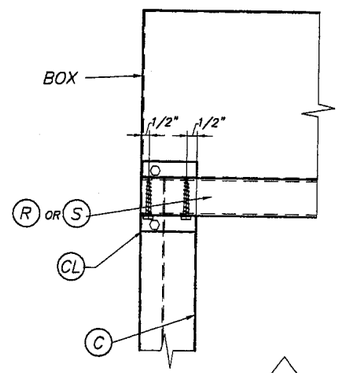

ELEVATION X1

SCALE : 1/8" = 1"

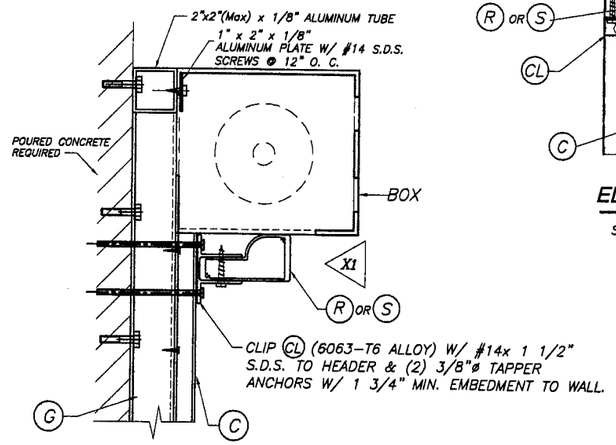

ALTERNATIVE 1A BUILD-OUT MOUNTING : SECTION W-W(3)

SCALE : 1/8" = 1"

NOTE :
THIS INSTALLATION IS ONLY VALID FOR STORM BARS WITH Max. SPAN = 8'-0", HEADERS WITH 7'-0" Max. SINGLE SPAN & 66 psf MAXIMUM DESIGN LOAD OR FOR STORM BARS WITH MAX. SPAN = 7'-0"; HEADERS WITH 8'-0" MAX. SINGLE SPAN & 66 p.s.f. MAXIMUM DESIGN LOAD.

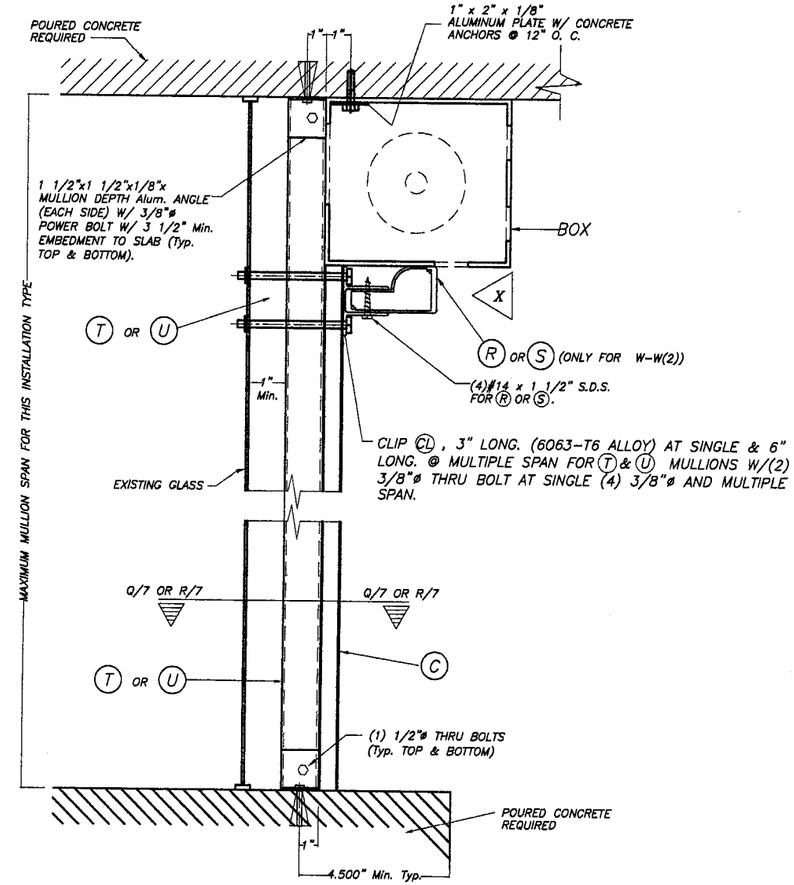

FLOOR/CEILING MOUNTING : SECTION W-W (1), W/O HEADER SECTION W-W (2), W/ HEADER

NOTE: THIS VALID ONLY FOR UP TO 75 psf DESIGN LOAD.

SCALE : 1/8" = 1"

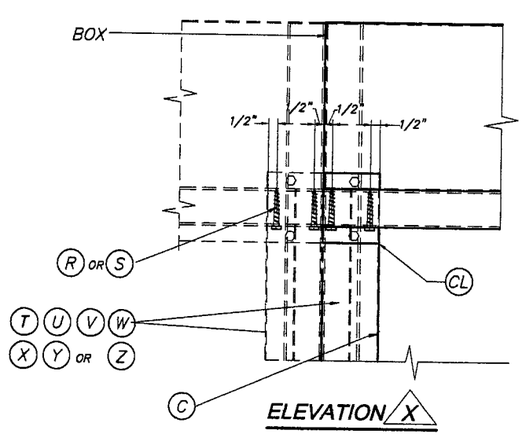

ELEVATION X

SCALE : 1/8" = 1"

TYPICAL HEADER CONNECTION AT ENDS: SECTIONS W-W

10/20/05

PRODUCT RENEWED
as complying with the Florida
Building Code
Acceptance No. 05-1003.04
Expiration Date 05/20/08
By M Thate
Miami Dade Product Control
Division

F.B.C. (HIGH VELOCITY HURRICANE ZONE)

TILTECO INC.
TILLIT TESTING & ENGINEERING COMPANY
6355 N.W. 36th. St. Ste. 305, VIRGINIA GARDENS, Fl. 33166
Phone : (305)871-1530 Fax : (305)871-1531
EB-0006719
WALTER A. TILLIT Jr., P. E.
FLORIDA Lic. 44167

1200 SERIES EXTRUDED ROLL UP SHUTTERS

JORDAN'S ALUMINUM, INC.
5731 DEWEY STREET
HOLLYWOOD, FL. 33023

REV. NO	DESCRIPTION	DATE	REV. No	DESCRIPTION	DATE
1	ALTERNATIVE 1A B.O. MOUNT	10/19/05	3		
2			4		

DRAWN BY: M.C.V. / L.G.
8/10/05 DATE
05-240 DRAWING No
SHEET 13 OF 21

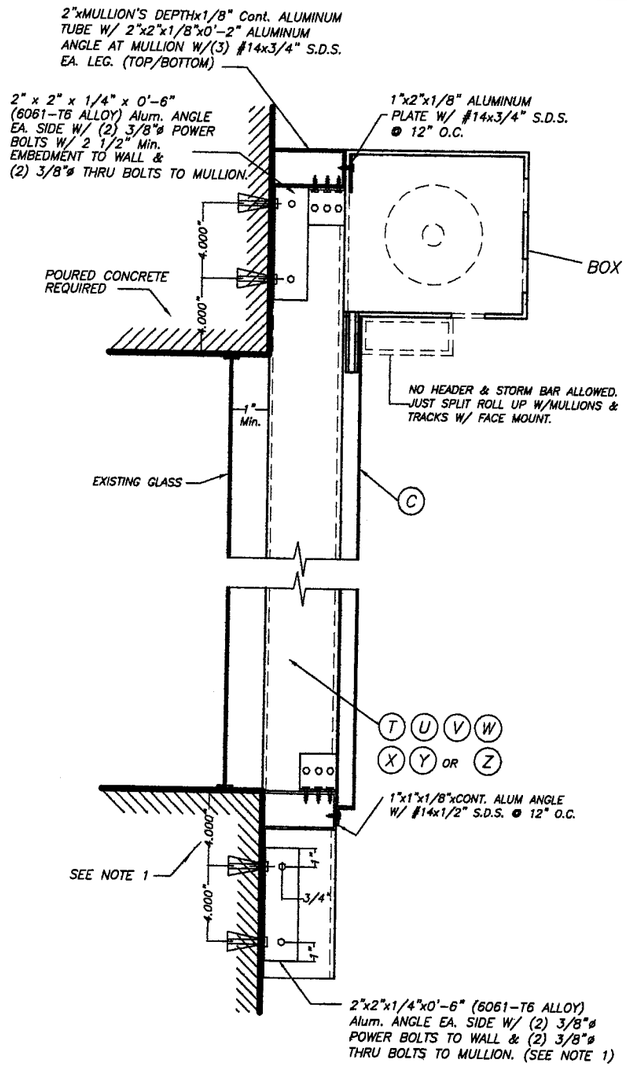

WALL MOUNTING : MULLION CONNECTION AT TOP & BOTTOM : SECTION W-W (1)

SCALE : 1/8" = 1"

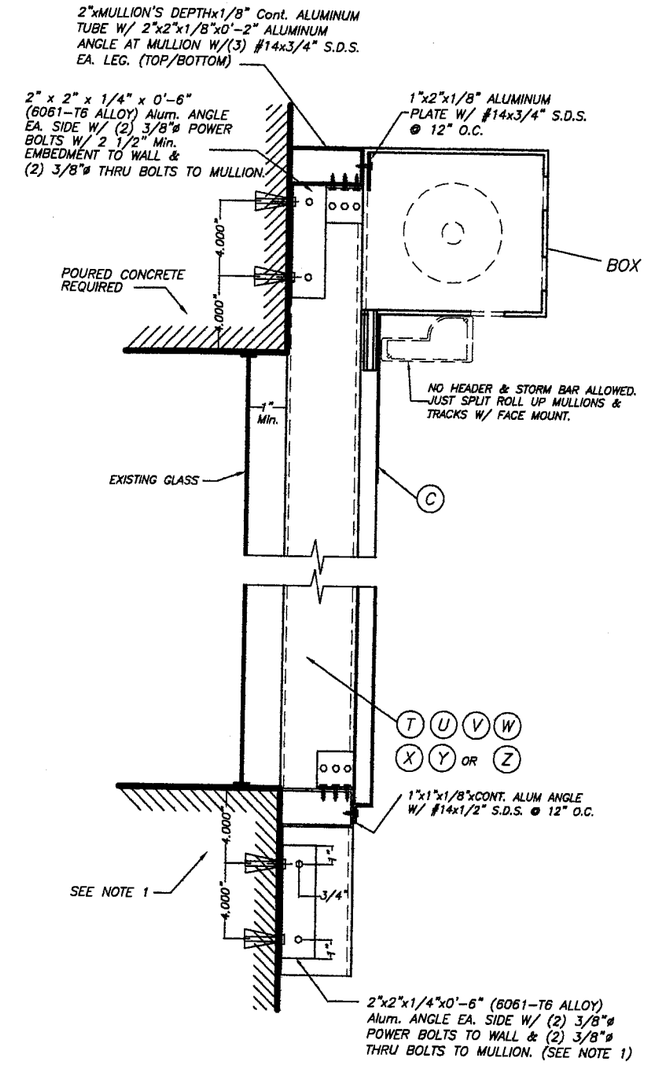

WALL MOUNTING : MULLION CONNECTION AT TOP & BOTTOM : SECTION W-W (1)

SCALE : 1/8" = 1"

PRODUCT RENEWED
as complying with the Florida
Building Code
Acceptance No 05-1003.04
Expiration Date 05/20/08
By M Thach
Miami Dade Product Control
Division

NOTE 1:
EXISTING WALL MAY BE POURED CONCRETE OR CONCRETE BLOCK W/ 1 1/2" Min. ANCHOR EMBEDMENT FOR DESIGN LOADS UP TO 150.0 psf W/ 7'-6" Max. MULLION SPAN AND SHALL BE POURED CONCRETE W/ 2 1/2" Min. ANCHOR EMBEDMENT FOR ALL MULLION SPAN AND LOAD COMBINATION.

F.B.C. (HIGH VELOCITY HURRICANE ZONE)

TYPICAL HEADER CONNECTION AT ENDS: SECTIONS W-W

10/20/05

TILTECO INC.
TILLIT TESTING & ENGINEERING COMPANY
6355 N.W. 36th. St., Ste. 305, VIRGINIA GARDENS, FL 33166
Phone : (305)871-1530 . Fax : (305)871-1531
EB-0006719
WALTER A. TILLIT Jr., P. E.
FLORIDA Lic. 44167

1200 SERIES EXTRUDED ROLL UP SHUTTERS

JORDAN'S ALUMINUM, INC.
5731 DEWEY STREET
HOLLYWOOD, FL. 33023

REV. NO	DESCRIPTION	DATE	REV. No	DESCRIPTION	DATE
1	–	–	3	–	–
2	–	–	4	–	–

DRAWN BY: M.C.V.
8/10/05 DATE
05-240 DRAWING No
SHEET 14 OF 21

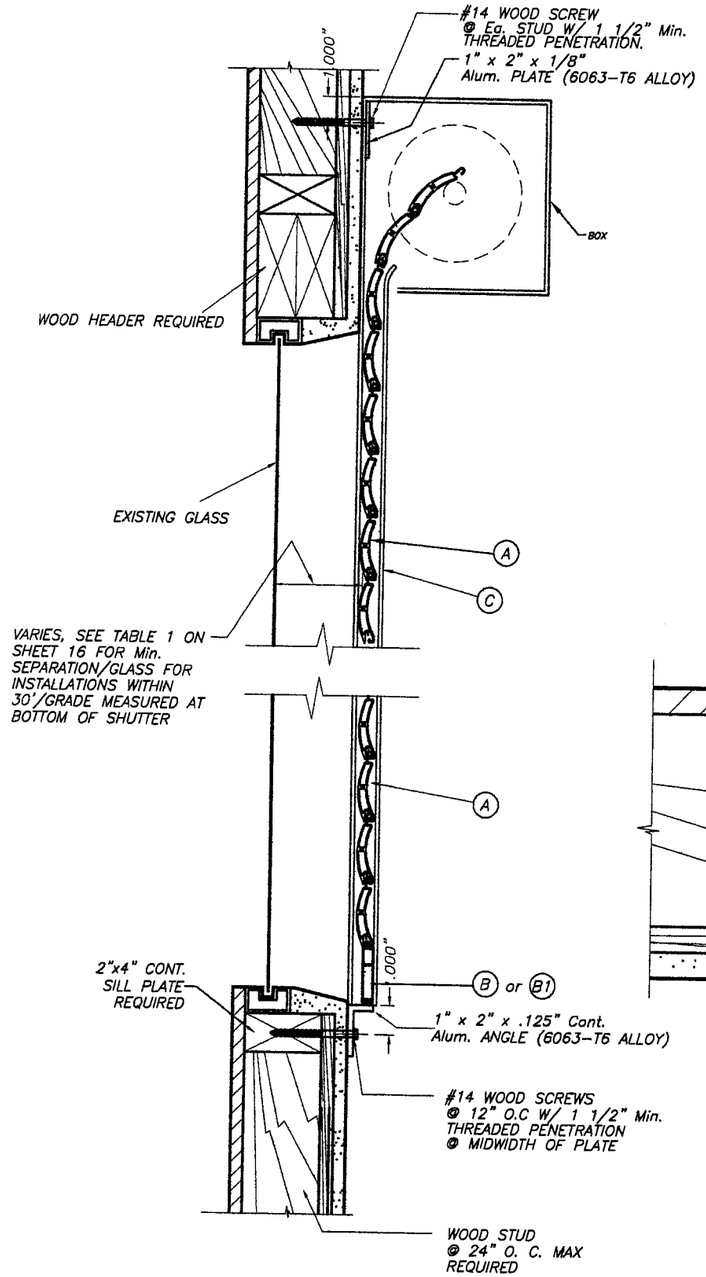

WALL MOUNTING INSTALLATION

SINGLE SPAN CONDITION

N. T. S.

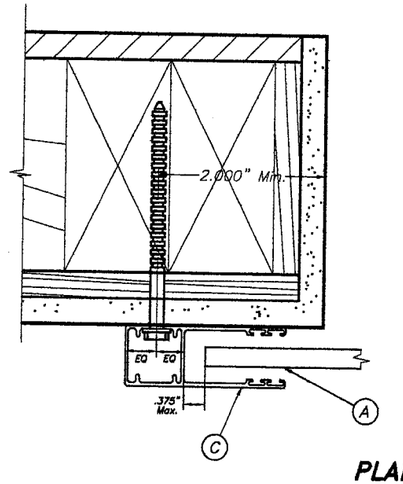

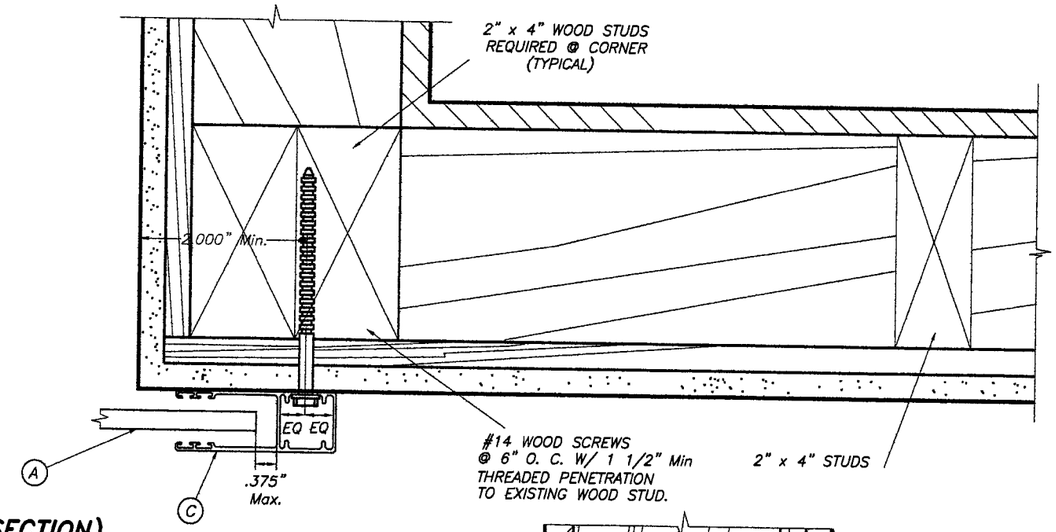

PLAN A (SECTION)

WALL MOUNT

SCALE : 3/8" = 1"

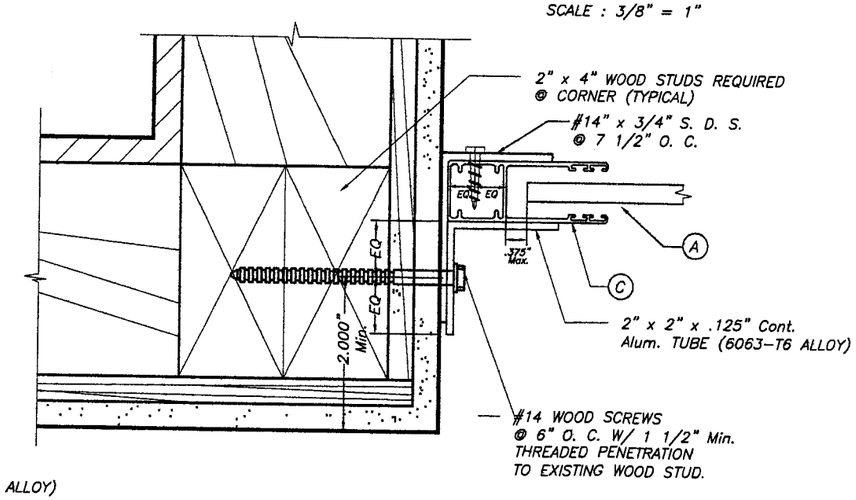

PLAN B (SECTION)

INSIDE MOUNT

SCALE : 3/8" = 1"

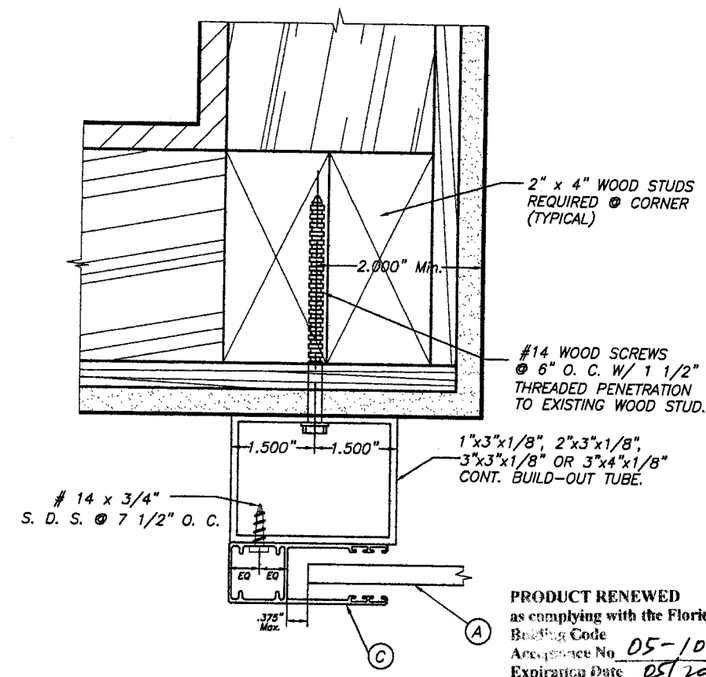

PLAN C (SECTION)

BUILD-OUT

SCALE : 3/8" = 1"

PRODUCT RENEWED
as complying with the Florida
Building Code
Acceptance No. 05-1003.04
Expiration Date 05/20/08
By M. Phate
Miami Dade Product Control
Division

NOTES:

1. INSTALLATIONS ARE ONLY VALID FOR BUILDINGS WITH DESIGN LOADS UP TO 80.0 psf.
2. FOR NEW FRAME CONSTRUCTION: WOOD MEMBER TO BE SOUTHERN PINE No. 2 W/ SPECIFIC DENSITY OF 0.55 OR EQUAL.
3. MINIMUM THREADED PENETRATION OF WOOD SCREWS INTO WOOD MEMBER TO BE 1 1/2".

10/20/05

F.B.C. (HIGH VELOCITY HURRICANE ZONE)

TILTECO INC.
TILLIT TESTING & ENGINEERING COMPANY
6355 N.W. 36th St., Ste. 305, VIRGINIA GARDENS, FL 33166
Phone : (305)871-1530 . Fax : (305)871-1531
EB-0006719
WALTER A. TILLIT Jr., P. E.
FLORIDA Lic. 44167

1200 SERIES EXTRUDED ROLL UP SHUTTERS

JORDAN'S ALUMINUM, INC.
5731 DEWEY STREET
HOLLYWOOD, FL. 33023

REV. NO	DESCRIPTION	DATE	REV. No	DESCRIPTION	DATE
1	–	–	3	–	–
2	–	–	4	–	–

DRAWN BY: M.C.V.
8/10/05 DATE
05-240 DRAWING No
SHEET 15 OF 21

SLAT PERFORMANCE CHART
MAXIMUM DESIGN PRESSURE RATING "W" (p. s. f.)
AND CORRESPONDING MAXIMUM SLAT SPAN "L" FOR TYPE 1 SLAT

(USE MAXIMUM VALUES BETWEEN POSITIVE AND NEGATIVE LOAD)

SLAT TYPE / Max. DESIGN LOAD "W" (p.s.f.)	MAXIMUM SLAT SPAN	MINIMUM SEPARATION TO GLASS			
	SINGLE & MULTIPLE UNIT *	SINGLE & MULTIPLE UNIT **		SINGLE & MULTIPLE UNIT ***	
		WALL MOUNT OR BUILD-OUT MOUNT	INSIDE WALL MOUNT	WALL MOUNT OR BUILD-OUT MOUNT	INSIDE WALL MOUNT
40.0	5'-5"	4"	4 3/8"	3"	3"
45.0	5'-3"	4"	4 3/8"	3"	3"
50.0	5'-1"	4"	4 3/8"	3"	3"
55.0	5'-0"	4"	4 3/8"	3"	3"
60.0	4'-10"	4"	4 3/8"	3"	3"
65.0	4'-9"	4"	4 3/8"	3"	3"
70.0	4'-7"	4"	4 3/8"	3"	3"
75.0	4'-6"	4"	4 3/8"	3"	3"
80.0	4'-5"	4"	4 3/8"	3"	3"
85.0	4'-4"	4"	4 3/8"	3"	3"
90.0	4'-3"	4"	4 3/8"	3"	3"
95.0	4'-2"	4"	4 3/8"	3"	3"
100.0	4'-1"	4"	4 3/8"	3"	3"
105.0	4'-0"	4"	4 3/8"	3"	3"
110.0	4'-0"	4"	4 3/8"	3"	3"
115.0	3'-11'	4"	4 3/8"	3"	3"
120.0	3'-10"	4"	4 3/8"	3"	3"
125.0	3'-10"	4"	4 3/8"	3"	3"
130.0	3'-9"	4"	4 3/8"	3"	3"
135.0	3'-9"	4"	4 3/8"	3"	3"
140.0	3'-8"	4"	4 3/8"	3"	3"
145.0	3'-8"	4"	4 3/8"	3"	3"
150.0	3'-7"	4"	4 3/8"	3"	3"
155.0	3'-7"	4"	4 3/8"	3"	3"
160.0	3'-6"	4"	4 3/8"	3"	3"
165.0	3'-6"	4"	4 3/8"	3"	3"
170.0	3'-5"	4"	4 3/8"	3"	3"
175.0	3'-5"	4"	4 3/8"	3"	3"
180.0	3'-4"	4"	4 3/8"	3"	3"
185.0	3'-4"	4"	4 3/8"	3"	3"
190.0	3'-4"	4"	4 3/8"	3"	3"
195.0	3'-3"	4"	4 3/8"	3"	3"

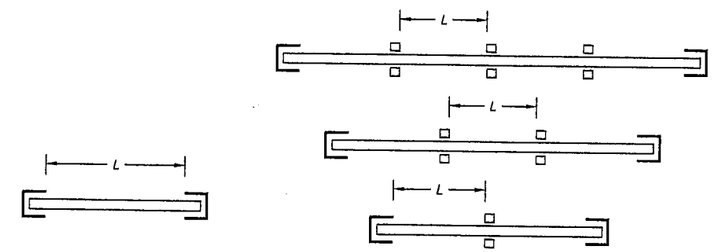

SINGLE SPAN

MULTIPLE SPAN

SPAN LAYOUT

* SPANS VALID FOR EVERY INSTALLATION LOCATED AT ANY ELEVATION OF BUILDING MEASURED AT BOTTOM OF SHUTTER. MINIMUM SEPARATION TO GLASS FOR SINGLE AND MULTIPLE UNITS SHALL BE MEASURED FROM BACK OF SLAT TO GLASS.

** MINIMUM SEPARATION TO GLASS FOR SHUTTERS INSTALLED WITHIN THE FIRST 30'-0" ELEVATION OF BUILDING AND MAXIMUM SPAN. SEE TABLE 1 FOR Min. SEPARATION TO GLASS FOR SPANS LESS THAN THE Max. ALLOWED.

*** MINIMUM SEPARATION TO GLASS FOR SHUTTERS INSTALLED ABOVE 30'-0" ELEVATION OF BUILDING, MEASURED AT BOTTOM OF SHUTTER.

PRODUCT RENEWED
as complying with the Florida Buiding Code
Acceptance No 05-1003.04
Expiration Date 05/20/08
By M Khah
Miami Dade Product Control Division

F.B.C. (HIGH VELOCITY HURRICANE ZONE)

10/20/05

TILTECO INC.
TILLIT TESTING & ENGINEERING COMPANY
6355 N.W. 36th St., Ste. 305, VIRGINIA GARDENS, Fl. 33166
Phone : (305)871-1530 . Fax : (305)871-1531
EB-0006719
WALTER A. TILLIT Jr., P. E.
FLORIDA Lic. 44167

1200 SERIES EXTRUDED ROLL UP SHUTTERS

JORDAN'S ALUMINUM, INC.
5731 DEWEY STREET
HOLLYWOOD, FL. 33023

REV. NO	DESCRIPTION	DATE	REV. No	DESCRIPTION	DATE
1	Min. SEPARATION TO GLASS	10/19/05	3		
2			4		

DRAWN DY: J.V. / L.G.
8/10/05 DATE
05-240 DRAWING No
SHEET 16 OF 21

STORM BAR LOADING CHART

MAXIMUM DESIGN PRESSURE RATING "W" (p. s. f.) AND CORRESPONDING MAXIMUM SPAN "L" FOR A GIVEN TYPE OF STORM BAR AND STORM BAR SPACING.

(USE MAXIMUM VALUES BETWEEN POSITIVE AND NEGATIVE LOAD)

MAX. SPAN FOR STORM BARS W/REGULAR CONCRETE ANCHORS

MAXIMUM DESIGN LOAD "W" (p.s.f.)	TYPE 1 STORM BAR 1" x 2" x .125" (D)				TYPE 2 STORM BAR 1" x 3" x .125" (E)				TYPE 3 STORM BAR 1" x 4" x .125" (F)				TYPE 4 STORM BAR 2" x 2" x .125" (G)			
	* STORM BAR SPACING				* STORM BAR SPACING				* STORM BAR SPACING				* STORM BAR SPACING			
	≤ 3'-0"	3' TO 4'	4' TO 5'	5' TO 6'	≤ 3'-0"	3' TO 4'	4' TO 5'	5' TO 6'	≤ 3'-0"	3' TO 4'	4' TO 5'	5' TO 6'	≤ 3'-0"	3' TO 4'	4' TO 5'	5' TO 6'
40 OR LESS	5'-2"	4'-6"	4'-0"	3'-8"	6'-11"	6'-0"	5'-5"	4'-11"	8'-8"	7'-6"	6'-8"	6'-1"	6'-9"	5'-10"	5'-3"	4'-10"
45	4'-10"	4'-3"	3'-9"	3'-5"	6'-7"	5'-8"	5'-1"	4'-8"	8'-2"	7'-1"	6'-4"	5'-9"	6'-5"	5'-6"	4'-11"	4'-6"
50	4'-7"	4'-0"	3'-7"	3'-3"	6'-3"	5'-5"	4'-10"	4'-5"	7'-9"	6'-8"	6'-0"	5'-6"	6'-1"	5'-3"	4'-8"	4'-3"
55	4'-5"	3'-10"	3'-5"	3'-1"	5'-11"	5'-2"	4'-7"	4'-2"	7'-5"	6'-5"	5'-9"	5'-3"	5'-9"	5'-0"	4'-6"	4'-1"
60	4'-3"	3'-8"	3'-3"	3'-0"	5'-8"	4'-11"	4'-5"	4'-0"	7'-1"	6'-1"	5'-6"	5'-0"	5'-6"	4'-10"	4'-3"	3'-11"
65	4'-1"	3'-6"	3'-2"	2'-10"	5'-5"	4'-9"	4'-3"	3'-10"	6'-9"	5'-11"	5'-3"	4'-10"	5'-4"	4'-7"	4'-1"	3'-9"
70	3'-11"	3'-5"	3'-0"	2'-9"	5'-3"	4'-7"	4'-1"	3'-9"	6'-6"	5'-8"	5'-1"	4'-7"	5'-2"	4'-5"	4'-0"	3'-7"
75	3'-9"	3'-3"	2'-11"	2'-8"	5'-1"	4'-5"	3'-11"	3'-7"	6'-4"	5'-6"	4'-11"	4'-6"	4'-11"	4'-3"	3'-10"	3'-6"
80	3'-8"	3'-2"	2'-10"	2'-7"	4'-11"	4'-3"	3'-10"	3'-6"	6'-1"	5'-4"	4'-9"	4'-4"	4'-10"	4'-2"	3'-9"	3'-5"
85	3'-7"	3'-1"	2'-9"	2'-6"	4'-9"	4'-2"	3'-8"	3'-4"	5'-11"	5'-2"	4'-7"	4'-2"	4'-8"	4'-0"	3'-7"	3'-3"
90	3'-5"	3'-0"	2'-8"	2'-5"	4'-8"	4'-0"	3'-7"	3'-3"	5'-9"	5'-0"	4'-6"	4'-1"	4'-6"	3'-11"	3'-6"	3'-2"
95	3'-4"	2'-11"	2'-7"	2'-4"	4'-6"	3'-11"	3'-6"	3'-2"	5'-7"	4'-10"	4'-4"	4'-0"	4'-5"	3'-10"	3'-5"	3'-1"
100	3'-3"	2'-10"	2'-6"	2'-4"	4'-5"	3'-10"	3'-5"	3'-1"	5'-6"	4'-9"	4'-3"	3'-10"	4'-3"	3'-9"	3'-4"	3'-0"
105	3'-2"	2'-9"	2'-6"	2'-3"	4'-3"	3'-9"	3'-4"	3'-0"	5'-4"	4'-7"	4'-2"	3'-9"	4'-2"	3'-7"	3'-3"	3'-0"
110	3'-1"	2'-8"	2'-5"	2'-2"	4'-2"	3'-8"	3'-3"	3'-0"	5'-3"	4'-6"	4'-0"	3'-8"	4'-1"	3'-6"	3'-2"	2'-11"
115	3'-1"	2'-8"	2'-4"	2'-2"	4'-1"	3'-7"	3'-2"	2'-11"	5'-1"	4'-5"	3'-11"	3'-7"	4'-0"	3'-6"	3'-1"	2'-10"
120	3'-0"	2'-7"	2'-4"	2'-1"	4'-0"	3'-6"	3'-1"	2'-10"	5'-0"	4'-4"	3'-10"	3'-6"	3'-11"	3'-5"	3'-0"	2'-9"
125	2'-11"	2'-6"	2'-3"	2'-1"	3'-11"	3'-5"	3'-1"	2'-9"	4'-11"	4'-3"	3'-9"	3'-6"	3'-10"	3'-4"	3'-0"	2'-9"
130	2'-10"	2'-6"	2'-3"	2'-0"	3'-10"	3'-4"	3'-0"	2'-9"	4'-10"	4'-2"	3'-9"	3'-5"	3'-9"	3'-3"	2'-11"	2'-8"
135	2'-10"	2'-5"	2'-2"	2'-0"	3'-9"	3'-3"	2'-11"	2'-8"	4'-9"	4'-1"	3'-8"	3'-4"	3'-8"	3'-2"	2'-10"	2'-7"
140	2'-9"	2'-5"	2'-2"	1'-11"	3'-9"	3'-3"	2'-11"	2'-8"	4'-7"	4'-0"	3'-7"	3'-3"	3'-7"	3'-2"	2'-10"	2'-7"
145	2'-9"	2'-4"	2'-1"	1'-11"	3'-8"	3'-2"	2'-10"	2'-7"	4'-7"	3'-11"	3'-6"	3'-3"	3'-7"	3'-1"	2'-9"	2'-6"
150	2'-8"	2'-4"	2'-1"	1'-11"	3'-7"	3'-1"	2'-9"	2'-6"	4'-6"	3'-10"	3'-6"	3'-2"	3'-6"	3'-0"	2'-9"	2'-6"
155	2'-7"	2'-3"	2'-0"	1'-10"	3'-6"	3'-1"	2'-9"	2'-6"	4'-5"	3'-10"	3'-5"	3'-1"	3'-5"	3'-0"	2'-8"	2'-5"
160	2'-7"	2'-3"	2'-0"	1'-10"	3'-6"	3'-0"	2'-8"	2'-5"	4'-4"	3'-9"	3'-4"	3'-1"	3'-5"	2'-11"	2'-8"	2'-5"
165	2'-7"	2'-2"	2'-0"	1'-10"	3'-5"	3'-0"	2'-8"	2'-5"	4'-3"	3'-8"	3'-4"	3'-0"	3'-4"	2'-11"	3'-7"	2'-4"
170	2'-6"	2'-2"	1'-11"	1'-9"	3'-4"	2'-11"	2'-7"	2'-5"	4'-2"	3'-8"	3'-3"	3'-0"	3'-3"	2'-10"	3'-7"	2'-4"
175	2'-6"	2'-2"	1'-11"	1'-9"	3'-4"	2'-11"	2'-7"	2'-4"	4'-2"	3'-7"	3'-2"	2'-11"	3'-3"	2'-10"	3'-6"	2'-4"
180	2'-5"	2'-1"	1'-11"	1'-9"	3'-3"	2'-10"	2'-6"	2'-4"	4'-1"	3'-6"	3'-2"	2'-11"	3'-2"	2'-9"	3'-6"	2'-3"
185	2'-5"	2'-1"	1'-10"	1'-8"	3'-3"	2'-10"	2'-6"	2'-3"	4'-0"	3'-6"	3'-1"	2'-10"	3'-2"	2'-9"	3'-5"	2'-3"
190	2'-4"	2'-1"	1'-10"	1'-8"	3'-2"	2'-9"	2'-6"	2'-3"	4'-0"	3'-5"	3'-1"	2'-10"	3'-1"	2'-8"	3'-5"	2'-2"
195	2'-4"	2'-0"	1'-10"	1'-8"	3'-2"	2'-9"	2'-5"	2'-3"	3'-11"	3'-5"	3'-0"	2'-9"	3'-1"	2'-8"	3'-5"	2'-2"

PRODUCT RENEWED
as complying with the Florida
Building Code
Acceptance No. 05-1003.04
Expiration Date 05/20/08
By
Miami Dade Product Control
Division

* STORM BAR SPACING SHALL BE SUCH THAT MAXIMUM SLAT SPAN SHALL NOT BE EXCEEDED.

10/20/05

F.B.C. (HIGH VELOCITY HURRICANE ZONE)

TILTECO INC.
TILLIT TESTING & ENGINEERING COMPANY
6355 N.W. 36th St. Ste. 305, VIRGINIA GARDENS, FL 33166
Phone : (305)871-1530 . Fax : (305)871-1531
EB-0006719
WALTER A. TILLIT Jr., P. E.
FLORIDA Lic. 44167

1200 SERIES EXTRUDED ROLL UP SHUTTERS

JORDAN'S ALUMINUM, INC.
5731 DEWEY STREET
HOLLYWOOD, FL. 33023

REV. NO	DESCRIPTION	DATE	REV. No	DESCRIPTION	DATE
1	–	–	3	–	–
2	–	–	4	–	–

DRAWN BY: J.V.
8/10/05 DATE
05-240 DRAWING No
SHEET 17 OF 21

STORM BAR LOADING CHART

MAXIMUM DESIGN PRESSURE RATING "W" (p. s. f.) AND CORRESPONDING MAXIMUM SPAN "L" FOR A GIVEN TYPE OF STORM BAR AND STORM BAR SPACING.

(USE MAXIMUM VALUES BETWEEN POSITIVE AND NEGATIVE LOAD)

MAX. SPAN FOR STORM BARS W/REGULAR CONCRETE ANCHORS

MAXIMUM DESIGN LOAD "W" (p.s.f.)	TYPE 5 STORM BAR 2"x 3" x .125" (H)				TYPE 6 STORM BAR 2"x 4" x .125" (I)				TYPE 7 STORM BAR 2"x 5" x .125" (J)				TYPE 8 STORM BAR 2"x 6" x .125" (K)			
	* STORM BAR SPACING				* STORM BAR SPACING				* STORM BAR SPACING				* STORM BAR SPACING			
	≤ 3'-0"	3' TO 4'	4' TO 5'	5' TO 6'	≤ 3'-0"	3' TO 4'	4' TO 5'	5' TO 6'	≤ 3'-0"	3' TO 4'	4' TO 5'	5' TO 6'	≤ 3'-0"	3' TO 4'	4' TO 5'	5' TO 6'
40 OR LESS	8'-7"	7'-9"	6'-11"	6'-4"	10'-0"	9'-6"	8'-6"	7'-9"	10'-0"	10'-0"	10'-0"	9'-2"	10'-0"	10'-0"	10'-0"	10'-0"
45	8'-4"	7'-4"	6'-6"	6'-0"	9'-11"	8'-11"	8'-0"	7'-4"	10'-0"	10'-0"	9'-5"	8'-7"	10'-0"	10'-0"	10'-0"	9'-11"
50	8'-0"	6'-11"	6'-2"	5'-8"	9'-8"	8'-6"	7'-7"	6'-11"	10'-0"	10'-0"	8'-11"	8'-2"	10'-0"	10'-0"	10'-0"	9'-5"
55	7'-8"	6'-7"	5'-11"	5'-5"	9'-4"	8'-1"	7'-3"	6'-7"	10'-0"	9'-7"	8'-6"	7'-9"	10'-0"	10'-0"	9'-10"	8'-11"
60	7'-4"	6'-4"	5'-8"	5'-2"	8'-11"	7'-9"	6'-11"	6'-4"	10'-0"	9'-2"	8'-2"	7'-6"	10'-0"	10'-0"	9'-5"	8'-7"
65	7'-0"	6'-1"	5'-5"	5'-0"	8'-7"	7'-5"	6'-8"	6'-1"	10'-0"	8'-9"	7'-10"	7'-2"	10'-0"	10'-0"	9'-0"	8'-3"
70	6'-9"	5'-10"	5'-3"	4'-9"	8'-3"	7'-2"	6'-5"	5'-10"	9'-9"	8'-6"	7'-7"	6'-11"	10'-0"	9'-8"	8'-8"	7'-11"
75	6'-6"	5'-8"	5'-1"	4'-7"	8'-0"	6'-11"	6'-2"	5'-8"	9'-5"	8'-2"	7'-4"	6'-8"	10'-0"	9'-5"	8'-5"	7'-8"
80	6'-4"	5'-6"	4'-11"	4'-6"	7'-9"	6'-9"	6'-0"	5'-6"	9'-2"	7'-11"	7'-1"	6'-6"	10'-0"	9'-1"	8'-1"	7'-5"
85	6'-2"	5'-4"	4'-9"	4'-4"	7'-6"	6'-6"	5'-10"	5'-4"	8'-10"	7'-8"	6'-10"	6'-3"	10'-0"	8'-10"	7'-11"	7'-2"
90	6'-0"	5'-2"	4'-7"	4'-3"	7'-4"	6'-4"	5'-8"	5'-2"	8'-7"	7'-6"	6'-8"	6'-1"	9'-11"	8'-7"	7'-8"	7'-0"
95	5'-10"	5'-0"	4'-6"	4'-1"	7'-1"	6'-2"	5'-6"	5'-0"	8'-5"	7'-3"	6'-6"	5'-11"	9'-7"	8'-4"	7'-5"	6'-10"
100	5'-8"	4'-11"	4'-5"	4'-0"	6'-11"	6'-0"	5'-4"	4'-11"	8'-2"	7'-1"	6'-4"	5'-9"	9'-5"	8'-1"	7'-3"	6'-8"
105	5'-6"	4'-9"	4'-3"	3'-11"	6'-9"	5'-10"	5'-3"	4'-9"	8'-0"	6'-11"	6'-2"	5'-8"	9'-2"	7'-11"	7'-1"	6'-6"
110	5'-5"	4'-8"	4'-2"	3'-10"	6'-7"	5'-9"	5'-1"	4'-8"	7'-9"	6'-9"	6'-0"	5'-6"	8'-11"	7'-9"	6'-11"	6'-4"
115	5'-3"	4'-7"	4'-1"	3'-9"	6'-6"	5'-7"	5'-0"	4'-7"	7'-7"	6'-7"	5'-11"	5'-5"	8'-9"	7'-7"	6'-9"	6'-2"
120	5'-2"	4'-6"	4'-0"	3'-8"	6'-4"	5'-6"	4'-11"	4'-6"	7'-6"	6'-6"	5'-9"	5'-3"	8'-7"	7'-5"	6'-8"	6'-1"
125	5'-1"	4'-5"	3'-11"	3'-7"	6'-2"	5'-4"	4'-10"	4'-5"	7'-4"	6'-4"	5'-8"	5'-2"	8'-5"	7'-3"	6'-6"	5'-11"
130	5'-0"	4'-4"	3'-10"	3'-6"	6'-1"	5'-3"	4'-9"	4'-4"	7'-2"	6'-2"	5'-7"	5'-1"	8'-3"	7'-1"	6'-4"	5'-10"
135	4'-10"	4'-3"	3'-9"	3'-5"	6'-0"	5'-2"	4'-7"	4'-3"	7'-0"	6'-1"	5'-5"	5'-0"	8'-1"	7'-0"	6'-3"	5'-8"
140	4'-9"	4'-2"	3'-8"	3'-5"	5'-10"	5'-1"	4'-6"	4'-2"	6'-11"	6'-0"	5'-4"	4'-11"	7'-11"	6'-10"	6'-2"	5'-7"
145	4'-8"	4'-1"	3'-8"	3'-4"	5'-9"	5'-0"	4'-6"	4'-1"	6'-9"	5'-11"	5'-3"	4'-10"	7'-9"	6'-9"	6'-0"	5'-6"
150	4'-7"	4'-0"	3'-7"	3'-3"	5'-8"	4'-11"	4'-5"	4'-0"	6'-8"	5'-9"	5'-2"	4'-9"	7'-8"	6'-8"	5'-11"	5'-5"
155	4'-7"	3'-11"	3'-6"	3'-3"	5'-7"	4'-10"	4'-4"	3'-11"	6'-7"	5'-8"	5'-1"	4'-8"	7'-6"	6'-6"	5'-10"	5'-4"
160	4'-6"	3'-10"	3'-6"	3'-2"	5'-6"	4'-9"	4'-3"	3'-11"	6'-6"	5'-7"	5'-0"	4'-7"	7'-5"	6'-5"	5'-9"	5'-3"
165	4'-5"	3'-10"	3'-5"	3'-1"	5'-5"	4'-8"	4'-2"	3'-10"	6'-4"	5'-6"	4'-11"	4'-6"	7'-4"	6'-4"	5'-8"	5'-2"
170	4'-4"	3'-9"	3'-4"	3'-1"	5'-4"	4'-7"	4'-1"	3'-9"	6'-3"	5'-5"	4'-10"	4'-5"	7'-2"	6'-3"	5'-7"	5'-1"
175	4'-3"	3'-8"	3'-4"	3'-0"	5'-3"	4'-6"	4'-1"	3'-8"	6'-2"	5'-4"	4'-9"	4'-4"	7'-1"	6'-2"	5'-6"	5'-0"
180	4'-3"	3'-8"	3'-3"	3'-0"	5'-2"	4'-6"	4'-0"	3'-8"	6'-1"	5'-3"	4'-9"	4'-4"	7'-0"	6'-1"	5'-5"	4'-11"
185	4'-2"	3'-7"	3'-3"	2'-11"	5'-1"	4'-5"	3'-11"	3'-7"	6'-0"	5'-2"	4'-8"	4'-3"	6'-11"	6'-0"	5'-4"	4'-10"
190	4'-1"	3'-7"	3'-2"	2'-11"	5'-0"	4'-4"	3'-11"	3'-7"	5'-11"	5'-2"	4'-7"	4'-2"	6'-10"	5'-11"	5'-3"	4'-10"
195	4'-1"	3'-6"	3'-2"	2'-10"	5'-0"	4'-4"	3'-10"	3'-6"	5'-10"	5'-1"	4'-6"	4'-2"	6'-9"	5'-10"	5'-2"	4'-9"

PRODUCT RENEWED
as complying with the Florida
Building Code
Approval Date 05-1003-04
Expiration Date 05/20/08
By M Hrak
Miami Dade Product Control
Division

* STORM BAR SPACING SHALL BE SUCH THAT MAXIMUM SLAT SPAN SHALL NOT BE EXCEEDED.

10/20/05

F.B.C. (HIGH VELOCITY HURRICANE ZONE)

TILTECO INC.
TILLIT TESTING & ENGINEERING COMPANY
6355 N.W. 36th St. Ste. 305, VIRGINIA GARDENS, FL 33166
Phone : (305)871-1530 . Fax : (305)871-1531
EB-0006719
WALTER A. TILLIT Jr., P. E.
FLORIDA Lic. 44167

1200 SERIES EXTRUDED ROLL UP SHUTTERS

JORDAN'S ALUMINUM, INC.
5731 DEWEY STREET
HOLLYWOOD, FL. 33023

REV. NO	DESCRIPTION	DATE	REV. No	DESCRIPTION	DATE
1	–	–	3	–	–
2	–	–	4	–	–

DRAWN BY: J.V.
8/10/05 DATE
05-240 DRAWING No
SHEET 18 OF 21

STORM BAR LOADING CHART

MAXIMUM DESIGN PRESSURE RATING "W" (p. s. f.) AND CORRESPONDING MAXIMUM SPAN "L" FOR A GIVEN TYPE OF STORM BAR AND STORM BAR SPACING.

(USE MAXIMUM VALUES BETWEEN POSITIVE AND NEGATIVE LOAD)

MAX. SPAN FOR STORM BARS W/REGULAR CONCRETE ANCHORS

MAXIMUM DESIGN LOAD "W" (p.s.f.)	TYPE 9 STORM BAR 1" x 3" HVY (L)				TYPE 10 STORM BAR 1" x 4" HVY (M)				TYPE 11 STORM BAR 1" x 5" HVY (N)			
	* STORM BAR SPACING				* STORM BAR SPACING				* STORM BAR SPACING			
	⩽ 3'-0"	3' TO 4'	4' TO 5'	5' TO 6'	⩽ 3'-0"	3' TO 4'	4' TO 5'	5' TO 6'	⩽ 3'-0"	3' TO 4'	4' TO 5'	5' TO 6'
40 OR LESS	8'-3"	7'-2"	6'-5"	5'-10"	10'-0"	8'-8"	7'-9"	7'-1'	10'-0"	10'-0"	9'-0"	8'-3"
45	7'-9"	6'-9"	6'-0"	5'-6"	9'-5"	8'-2"	7'-4"	6'-8"	10'-0"	9'-6"	8'-6"	7'-9"
50	7'-5"	6'-5"	5'-9"	5'-3"	8'-11"	7'-9"	6'-11"	6'-4"	10'-0"	9'-0"	8'-1"	7'-4"
55	7'-1"	6'-1"	5'-6"	5'-0"	8'-6"	7'-4"	6'-7"	6'-0"	9'-11"	8'-7"	7'-8"	7'-0"
60	6'-9"	5'-10"	5'-3"	4'-9"	8'-2"	7'-1"	6'-4"	5'-9"	9'-6"	8'-3"	7'-4"	6'-9"
65	6'-6"	5'-7"	5'-0"	4'-7"	7'-10"	6'-9"	6'-1"	5'-6"	9'-2"	7'-11"	7'-1"	6'-5"
70	6'-3"	5'-5"	4'-10"	4'-5"	7'-7"	6'-6"	5'-10"	5'-4"	8'-10"	7'-7"	6'-10"	6'-3"
75	6'-0"	5'-3"	4'-8"	4'-3"	7'-4"	6'-4"	5'-8"	5'-2"	8'-6"	7'-4"	6'-7"	6'-0"
80	5'-10"	5'-1"	4'-6"	4'-2"	7'-1"	6'-1"	5'-6"	5'-0"	8'-3"	7'-1"	6'-4"	5'-10"
85	5'-8"	4'-11"	4'-5"	4'-0"	6'-10"	5'-11"	5'-4"	4'-10"	8'-0"	6'-11"	6'-2"	5'-8"
90	5'-6"	4'-9"	4'-3"	3-11"	6'-8"	5'-9"	5'-2"	4'-8"	7'-9"	6'-9"	6'-0"	5'-6"
95	5'-4"	4'-8"	4'-2"	3'-10"	6'-6"	5'-7"	5'-0"	4'-7"	7'-7"	6'-6"	5'-10"	5'-4"
100	5'-3"	4'-6"	4'-1"	3'-8"	6'-4"	5'-6"	4'-11'	4'-6"	7'-4"	6'-4"	5'-8"	5'-2"
105	5'-1"	4'-5"	3-11"	3'-7"	6'-2"	5'-4"	4'-9"	4'-4"	7'-2"	6'-3"	5'-7"	5'-1"
110	5'-0"	4'-4"	3'-10"	3'-6"	6'-0"	5'-3"	4'-8"	4'-3"	7'-0"	6'-1"	5'-5"	5'-0"
115	4'-10"	4'-3"	3'-9"	3'-5"	5'-11"	5'-1"	4'-7"	4'-2"	6'-10"	5'-11"	5'-4"	4'-10"
120	4'-9"	4'-2"	3'-8"	3'-4"	5'-9"	5'-0"	4'-6"	4'-1"	6'-9"	5'-10"	5'-2"	4'-9"
125	4'-8"	4'-1"	3'-7"	3'-4"	5'-8"	4'-11"	4'-5"	4'-0"	6'-7"	5'-8"	5'-1"	4'-8"
130	4'-7"	4'-0"	3'-7"	3-3"	5'-6"	4'-10"	4'-3"	3-11"	6'-5"	5'-7"	5'-0"	4'-7"
135	4'-6"	3-11"	3'-6"	3'-2"	5'-5"	4'-8"	4'-3"	3'-10"	6'-4"	5'-6"	4'-11'	4'-6"
140	4'-5"	3'-10"	3'-5"	3'-1'	5'-4"	4'-7"	4'-2"	3'-9"	6'-3"	5'-5"	4'-10"	4'-5"
145	4'-4"	3'-9"	3'-4"	3'-1'	5'-3"	4'-7"	4'-1"	3'-9"	6'-1"	5'-4"	4'-9"	4'-4"
150	4'-3"	3'-8"	3'-4"	3'-0"	5'-2"	4'-6"	4'-0"	3'-8"	6'-0"	5'-2"	4'-8"	4'-3"
155	4'-2"	3'-8"	3-3"	3'-0"	5'-1"	4'-5"	3-11"	3'-7"	5'-11"	5'-1"	4'-7"	4'-2"
160	4'-2"	3'-7"	3'-2"	2'-11"	5'-0"	4'-4"	3'-10"	3'-6"	5'-10"	5'-0"	4'-6"	4'-1"
165	4'-1"	3'-6"	3'-2'	2'-11"	4'-11'	4'-3"	3'-10"	3'-6"	5'-9"	5'-0"	4'-5"	4'-1"
170	4'-0"	3'-6"	3'-1'	2'-10"	4'-10"	4'-2"	3'-9"	3'-5"	5'-8"	4'-11'	4'-4"	4'-0"
175	3-11"	3'-5"	3'-1'	2'-10"	4'-9"	4'-2"	3'-8"	3'-5"	5'-7"	4'-10"	4'-4"	3-11"
180	3-11'	3'-4"	3'-0"	2'-9"	4'-8"	4'-1"	3'-8"	3'-4"	5'-6"	4'-9"	4'-3"	3-11"
185	3'-10"	3'-4"	3'-0"	2'-9"	4'-8"	4'-0"	3'-7"	3-3"	5'-5"	4'-8"	4'-2"	3'-10"
190	3'-10"	3-3"	2'-11"	2'-8"	4'-7"	4'-0"	3'-7"	3-3"	5'-4"	4'-7"	4'-2"	3'-9"
195	3'-9"	3'-3"	2'-11"	2'-8"	4'-6"	3-11"	3'-6"	3'-2"	5'-3"	4'-7"	4'-1"	3'-9"

PRODUCT RENEWED as complying with the Florida Building Code
Product No 05-1003-04
Expiration Date 05/20/08
By M Thach
Miami-Dade Product Control Division

* STORM BAR SPACING SHALL BE SUCH THAT MAXIMUM SLAT SPAN SHALL NOT BE EXCEEDED.

10/20/05

F.B.C. (HIGH VELOCITY HURRICANE ZONE)

TILTECO INC.
TILLIT TESTING & ENGINEERING COMPANY
6355 N.W. 36th. St., Ste. 305, VIRGINIA GARDENS, FL. 33166
Phone : (305)871-1530 . Fax : (305)871-1531
EB-0006719
WALTER A. TILLIT Jr., P. E.
FLORIDA Lic. 44167

1200 SERIES EXTRUDED ROLL UP SHUTTERS

JORDAN'S ALUMINUM, INC.
5731 DEWEY STREET
HOLLYWOOD, FL. 33023

REV. NO	DESCRIPTION	DATE	REV. No	DESCRIPTION	DATE
1	–	–	3	–	–
2	–	–	4	–	–

DRAWN BY: J.V.
8/10/05 DATE
05-240 DRAWING No
SHEET 19 OF 21

HEADER LOADING CHART

MAXIMUM DESIGN PRESSURE RATING "W" (p. s. f.) AND CORRESPONDING MAXIMUM SPAN "L" FOR A GIVEN TYPE OF HEADER.

(USE MAXIMUM VALUES BETWEEN POSITIVE AND NEGATIVE LOAD)

MAXIMUM DESIGN LOAD "W" (p.s.f.)	TYPE 1 HEADER (O) 2" x 3" x 1/8"		TYPE 2 HEADER (P) 2" x 6" x 1/8"			TYPE 3 HEADER (Q) 2" x 6" x 1/4"			TYPE 4 HEADER (R) 2" x 5" x 1/4"			TYPE 5 HEADER (S) 2" x 4" x 1/4"		
	STORM BAR HEIGHT		STORM BAR HEIGHT			STORM BAR HEIGHT			STORM BAR HEIGHT			STORM BAR HEIGHT		
	⩽ 5'-0"	5' TO 7'	⩽ 6'-0"	6' TO 8'	8' TO 10'	< 6'-0"	6' TO 8'	8' TO 10'	⩽ 6'-0"	6' TO 8'	8' TO 10'	⩽ 6'-0"	6' TO 8'	8' TO 10'
40.0 OR LESS	9'-11"	8'-4"	15'-1"	13'-1"	11'-8"	19'-4"	17'-0"	15'-3"	14'-8"	12'-9"	11'-5"	12'-7"	10-'11"	9'-9"
45.0	9'-4"	7'-11"	14'-3"	12'-4"	11'-0"	18'-6"	16'-1"	14'-4"	13'-10"	12'-0"	10'-9"	11'-11"	10'-3"	9'-2"
50.0	8'-10"	7'-6"	13'-6"	11'-8"	10'-6"	17'-7"	15'-3"	13'-7"	13'-2"	11'-5"	10'-2"	11'-3"	9'-9"	8'-9"
55.0	8'-5"	7'-2"	12'-11"	11'-2"	10'-0"	16'-9"	14'-6"	13'-0"	12'-6"	10'-10"	9'-8"	10'-9"	9'-4"	8'-4"
60.0	8'-1"	6'-10"	12'-4"	10'-8"	9'-7"	16'-1"	13'-11"	12'-5"	12'-0"	10'-5"	9'-4"	10'-3"	8'-11"	8'-0"
65.0	7'-9"	6'-7"	11'-10"	10'-3"	9'-2"	15'-5"	13'-4"	11'-11"	11'-6"	10'-0"	8'-11"	9'-11"	8'-7"	7'-8"
70.0	7'-6"	6'-4"	11'-5"	9'-11"	8'-10"	14'-10"	12'-10	11'-6"	11'-1"	9'-7"	8'-7"	9'-6"	8'-3"	7'-5"
75.0	7'-3"	6'-1"	11'-0"	9'-7"	8'-6"	14'-4"	12'-5"	11'-1"	10'-9"	9'-4"	8'-4"	9'-2"	8'-0"	7'-2"
80.0	7'-0"	5'-11"	10'-8"	9'-3"	8'-3"	13'-11"	12'-0"	10'-9"	10'-5"	9'-0"	8'-1"	8'-11"	7'-9"	6'-11"
85.0	6'-9"	5'-9"	10'-4"	9'-0"	8'-0"	13'-6"	11'-8"	10'-5"	10'-1"	8'-9"	7'-10"	8'-8"	7'-6"	6'-8"
90.0	6'-7"	5'-7"	10'-1"	8'-9"	7'-10"	13'-1"	11'-4"	10'-2"	9'-10"	8'-6"	7'-7"	8'-5"	7'-3"	6'-6"
95.0	6'-5"	5'-5"	9'-10"	8'-6"	7'-7"	12'-9"	11'-1"	9'-11"	9'-6"	8'-3"	7'-5"	8'-2"	7'-1"	6'-4"
100.0	6'-3"	5'-3"	9'-7"	8'-3"	7'-5"	12'-5"	10'-9"	9'-8"	9'-4"	8'-1"	7'-2"	8'-0"	6'-11"	6'-2"
105.0	6'-1"	5'-2"	9'-4"	8'-1"	7'-3"	12'-2"	10'-6"	9'-5"	9'-1"	7'-10"	7'-0"	7'-9"	6'-9"	6'-0"
110.0	6'-0"	5'-0"	9'-1"	7'-11"	7'-1"	11'-10"	10'-3"	9'-2"	8'-10"	7'-8"	6'-10"	7'-7"	6'-7"	5'-11"
115.0	5'-10"	4'-11"	8'-11"	7'-9"	6'-11"	11'-7"	10'-0"	9'-0"	8'-8"	7'-6"	6'-9"	7'-5"	6'-5"	5'-9"
120.0	5'-9"	4'-10"	8'-9"	7'-7"	6'-9"	11'-4"	9'-10"	8'-9"	8'-6"	7'-4"	6'-7"	7'-3"	6'-4"	5'-8"
125.0	5'-7"	4'-9"	8'-6"	7'-5"	6'-7"	11'-1"	9'-8"	8'-7"	8'-4"	7'-2"	6'-5"	7'-2"	6'-2"	5'-6"
130.0	5'-6"	4'-8"	8'-4"	7'-3"	6'-6"	10'-11"	9'-5"	8'-5"	8'-2"	7'-1"	6'-4"	7'-0"	6'-1"	5'-5"
135.0	5'-5"	4'-7"	8'-3"	7'-1"	6'-4"	10'-8"	9'-3"	8'-3"	8'-0"	6'-11"	6'-2"	6'-10"	5'-11"	5'-4"
140.0	5'-3"	4'-6"	8'-1"	7'-0"	6'-3"	10'-6"	9'-1"	8'-2"	7'-10"	6'-10"	6'-1"	6'-9"	5'-10"	5'-3"
145.0	5'-2"	4'-5"	7'-11"	6'-10"	6'-2"	10'-4"	8'-11"	8'-0"	7'-9"	6'-8"	6'-0"	6'-7"	5'-9"	5'-1"
150.0	5'-1"	4'-4"	7'-10"	6'-9"	6'-0"	10'-2"	8'-9"	7'-10"	7'-7"	6'-7"	5'-11"	6'-6"	5'-8"	5'-0"
155.0	5'-0"	4'-3"	7'-8"	6'-8"	5'-11"	10'-0"	8'-8"	7'-9"	7'-6"	6'-6"	5'-9"	6'-5"	5'-7"	4'-11"
160.0	4'-11"	4'-2"	7'-7"	6'-6"	5'-10"	9'-10"	8'-6"	7'-7"	7'-4"	6'-4"	5'-8"	6'-4"	5'-5"	4'-11"
165.0	4'-10"	4'-1"	7'-5"	6'-5"	5'-9"	9'-8"	8'-5"	7'-6"	7'-3"	6'-3"	5'-7"	6'-2"	5'-4"	4'-10"
170.0	4'-10"	4'-1"	7'-4"	6'-4"	5'-8"	9'-6"	8'-3"	7'-5"	7'-2"	6'-2"	5'-6"	6'-1"	5'-3"	4'-9"
175.0	4'-9"	4'-0"	7'-3"	6'-3"	5'-7"	9'-5"	8'-2"	7'-3"	7'-0"	6'-1"	5'-5"	6'-0"	5'-3"	4'-8"
180.0	4'-8"	3'-11"	7'-1"	6'-2"	5'-6"	9'-3"	8'-0"	7'-2"	6'-11"	6'-0"	5'-4"	5'-11"	5'-2"	4'-7"
185.0	4'-7"	3'-11"	7-'0"	6'-1"	5'-5"	9'-2"	7'-11"	7'-1"	6'-10"	5'-11"	5'-4"	5'-10"	5'-1"	4'-6"
190.0	4'-6"	3'-10"	6'-11"	6'-0"	5'-4"	9'-0"	7'-10"	7'-0"	6'-9"	5'-10"	5'-3"	5'-9"	5'-0"	4'-6"
195.0	4'-6"	3'-9"	6'-10"	5'-11"	5'-4"	8'-11"	7'-8"	6'-11"	6'-8"	5'-9"	5'-2"	5'-8"	4'-11"	4'-5"

PRODUCT RENEWED
as complying with the Florida
Buiding Code
Acceptance No. 05-1003.04
Expiration Date ~~05/20/08~~
By M Hall
Miami-Dade Product Control
Division

F.B.C. (HIGH VELOCITY HURRICANE ZONE)

10/20/05

TILTECO INC.
TILLIT TESTING & ENGINEERING COMPANY
6355 N.W. 36th. St., Ste. 305, VIRGINIA GARDENS, FL 33166
Phone : (305)871-1530 Fax : (305)871-1531
EB-0006719
WALTER A. TILLIT Jr., P. E.
FLORIDA Lic. 44167

1200 SERIES EXTRUDED ROLL UP SHUTTERS

JORDAN'S ALUMINUM, INC.
5731 DEWEY STREET
HOLLYWOOD, FL. 33023

REV. NO	DESCRIPTION	DATE	REV. No	DESCRIPTION	DATE
1	–	–	3	–	–
2	–	–	4	–	–

DRAWN BY: J.V.
8/10/05 DATE
05-240 DRAWING No
SHEET 20 OF 21

MULLION LOADING CHART

MAXIMUM DESIGN PRESSURE RATING "W" (p. s. f.) AND CORRESPONDING MAXIMUM SPAN "L"(Ft) FOR A GIVEN TYPE OF MULLION AND MULLION SPACING (Ft.).

(USE MAXIMUM VALUES BETWEEN POSITIVE AND NEGATIVE LOAD)

PRODUCT RENEWED
as complying with the Florida
Building Code
Acceptance No. 05-1003.04
Expiration Date 03/20/08
By M. Khal
Miami-Dade Product Control
Division

MAXIMUM DESIGN LOAD "W" (p.s.f.)	TYPE 1 MULLION (T) 2" x 2" x 1/8"	TYPE 2 MULLION (U) 2" x 3" x 1/8"		TYPE 3 MULLION (V) 2" x 4" x 1/8"			TYPE 4 MULLION (W) 2" x 5" x 1/8"				TYPE 5 MULLION (X) 2" x 6" x 1/8"				TYPE 6 MULLION (Y) 4" x 4" x 1/4"				TYPE 7 MULLION (Z) 4" x 6" x 1/4"					
	MULLION SPACING	MULLION SPACING		MULLION SPACING			MULLION SPACING				MULLION SPACING				MULLION SPACING				MULLION SPACING					
	≤ 4'-0"	≤ 4'-0"	4' TO 5'	≤ 4'-0"	4' TO 5'	5' TO 6'	≤ 4'-0"	4' TO 5'	5' TO 6'	6' TO 8'	< 4'-0"	4' TO 5'	5' TO 6'	6' TO 8'	< 4'-0"	4' TO 5'	5' TO 6'	6' TO 8'	< 4'-0"	4' TO 5'	5' TO 6'	6' TO 8'	8' TO 10'	10' TO 12'
40.0 OR LESS	4'-8"	6'-6"	6'-0"	8'-2"	7'-7"	7'-2"	9'-11"	9'-2"	8'-8"	9'-0"	11'-6"	10'-8"	10'-1"	10'-6"	11'-9"	10'-11"	10'-3"	10'-9"	16'-4"	15'-2"	14'-3"	14'-10"	13'-10"	13'-0"
45.0	4'-6"	6'-3"	5'-9"	7'11"	7'-4"	6'-11"	9'-6"	8'-10"	8'-4"	8'-8"	11'-1"	10'-3"	9'-8"	10'-1"	11'-4"	10'-6"	9'-11"	10'-4"	15'-8"	14'-7"	13'-8"	14'-4"	13'-3"	12'-6"
50.0	4'-4"	6'-0"	5'-7"	7'-7"	7'-1"	6'-8"	9'-2"	8'-6"	8'-0"	8'-4"	10'-8"	9'-11"	9'-4"	9'-9"	10'-11"	10'-2"	9'-7"	10'-0"	15'-2"	14'-1"	13'-3"	13'-10"	12'-10"	12'-1"
55.0	4'-2"	5'-10"	5'-5"	7'-5"	6'-10	6'-5"	8'-11"	8'-3"	7'-9"	8'-1"	10'-4"	9'-7"	8'-10"	9'-5"	10'-7"	9'-10"	9'-3"	9'-8"	14'-8"	13'-7"	12'-10"	13'-4"	12'-5"	11'-8"
60.0	4'-1"	5'-8"	5'-3"	7'-2"	6'-8"	6'-3"	8'-8"	8'-0"	7'-6"	7'-10"	10'-1"	9'-4"	8'-6"	9'-1"	10'-3"	9'-7"	9'-0"	9'-5"	14'-3"	13'-3"	12'-5"	13'-0"	12'-1"	11'-4"
65.0	4'-0"	5'-6"	5'-1"	7'-0"	6'-6"	6'-1"	8'-5"	7'-10"	7'-2"	7'-8"	9'-10"	8'-11"	8'-2"	8'-8"	10'-0"	9'-4"	8'-9"	9'-2"	13'-11"	12'-11"	12'-2"	12'-8"	11'-9"	11'-1"
70.0	3'-11"	5'-4"	5'-0"	6'-10"	6'-4"	5'-10"	8'-2"	7'-7"	6'-11"	7'-4"	9'-7"	8'-7"	7'-10	8'-4"	9'-9"	9'-1"	8'-6"	8'-11"	13'-7"	12'-7"	11'-10"	12'-4"	11'-5"	10'-9"
75.0	3'-9"	5'-3"	4'-11"	6'-8"	6'-2"	5'-8"	8'-0"	7'-4"	6'-8"	7'-1"	9'-4"	8'-4"	7'-7"	8'-1"	9'-7"	8'-10"	8'-4"	8'-8"	13'-3"	12'-3"	11'-7"	12'-1"	11'-2"	10'-6"
80.0	3'-9"	5'-2"	4'-9"	6'-6"	6'-0"	5'-6"	7'-10"	7'-1"	6'-6"	6'-11"	9'-0"	8'-1"	7'-4"	7'-10"	9'-4"	8'-8"	8'-2"	8'-6"	12'-11"	12'-0"	11'-4"	11'-10"	10'-11"	10'-4"
85.0	3'-8"	5'-0"	4'-8"	6'-5"	5'-10"	5'-4"	7'-8"	6'-10"	6'-3"	6'-8"	8'-9"	7'-10	7'-2"	7'-7"	9'-2"	8'-6"	8'-0"	8'-4"	12'-8"	11'-9"	11'-1"	11'-7"	10'-9"	10'-1"
90.0	3'-7"	4'-11"	4'-7"	6'-3"	5'-8"	5'-2"	7'-6"	6'-8"	6'-1"	6'-6"	8'-6"	7'-7"	6'-11"	7'-5"	9'-0"	8'-4"	7'-10"	8'-2"	12'-5"	11'-7"	10'-11"	11'-4"	10'-6"	9'-11"
95.0	3'-6"	4'-10"	4'-6"	6'-2"	5'-6"	5'-0"	7'-3"	6'-6"	5'-11"	6'-4"	8'-3"	7'-5"	6'-9"	7'-2"	8'-10"	8'-2"	7'-9"	8'-1"	12'-3"	11'-4"	10'-8"	11'-2"	10'-4"	9'-9"
100.0	3'-5"	4'-9"	4'-5"	6'-0"	5'-4"	4'-11"	7'-1"	6'-4"	5'-9"	6'-2"	8'-1"	7'-2"	6'-7"	7'-0"	8'-8"	8'-1"	7'-7"	7'-11"	12'-0"	11'-2"	10'-6"	10'-11"	10'-2"	9'-7"
105.0	3'-5"	4'-8"	4'-3"	5'-10"	5'-3"	4'-9"	6'-11"	6'-2"	5'-8"	6'-0"	7'-10"	7'-0"	6'-5"	6'-10"	8'-6"	7'-11"	7'-6"	7'-9"	11'-10"	11'-0"	10'-4"	10'-9"	10'-0"	9'-5"
110.0	3'-4"	4'-7"	4'-2"	5'-9"	5'-1"	4'-8"	6'-9"	6'-0"	5'-6"	5'-10"	7'-8"	6'-10"	6'-3"	6'-8"	8'-5"	7'-10"	7'-4"	7'-7"	11'-8"	10'-10"	10'-2"	10'-7"	9'-10"	9'-3"
115.0	3'-3"	4'-7"	4'-1"	5'-7"	5'-0"	4'-7"	6'-7"	5'-11"	5'-5"	5'-9"	7'-6"	6'-9"	6'-2"	6'-6"	8'-3"	7'-8"	7'-3"	7'-5"	11'-6"	10'-8"	10'-0"	10'-5"	9'-9"	9'-2"
120.0	3'-3"	4'-6"	4'-0"	5'-6"	4'-11"	4'-6"	6'-6"	5'-9"	5'-3"	5'-7"	7'-4"	6'-7"	6'-0	6'-5"	8'-2"	7'-7"	7'-2"	7'-4"	11'-4"	10'-6"	9'-11"	10'-4"	9'-7"	9'-0"
125.0	3'-2"	4'-5"	3'-11"	5'-4"	4'-10"	4'-5"	6'-4"	5'-8"	5'-2"	5'-6"	7'-2"	6'-5"	5'-11"	6'-3"	8'-1"	7'-6"	7'-0"	7'-3"	11'-2"	10'-4"	9'-9"	10'-2"	9'-5"	8'-10"
130.0	3'-2"	4'-4"	3'-10"	5'-3"	4'-9"	4'-4"	6'-2"	5'-7"	5'-1"	5'-5"	7'-1"	6'-4"	5'-10"	6'-2"	7'-11"	7'-5"	6'-11"	7'-2"	11'-0"	10'-3"	9'-8"	10'-0"	9'-4"	8'-8"
135.0	3'-1"	4'-3"	3'-9"	5'-2""	4'-7"	4'-3"	6'-1"	5'-5"	5'-0"	5'-4"	6'-11"	6'-2"	5'-8"	6'-0	7'-10"	7'-3"	6'-10"	6'-11"	10'-11"	10'-1"	9'-6"	9'-11"	9'-2"	8'-6"
140.0	3'-1"	4'-2"	3'-8"	5'-1"	4'-6"	4'-2"	6'-0"	5'-4"	4'-11"	5'-2"	6'-10"	6'-1"	5'-7"	5'-11"	7'-9"	7'-2"	6'-9"	7'-1"	10'-9"	10'-0"	9'-5"	9'-10"	9'-1"	8'-5"
145.0	3'-1"	4'-1"	3'-8"	5'-0"	4'-6"	4'-1"	5'-11"	5'-3"	4'-10"	5'-1"	6'-8"	6'-0	5'-6"	5'-10"	7'-8"	7'-1"	6'-8"	7'-0"	10'-7"	9'-10"	9'-3"	9'-8"	9'-0"	8'-3"
150.0	3'-0"	4'-0"	3'-7"	4'-11"	4'-5"	4'-0"	5'-9"	5'-2"	4'-9"	5'-0"	6'-7"	5'-11"	5'-4"	5'-9"	7'-7"	7'-0"	6'-7"	6'-11"	10'-6"	9'-9"	9'-2"	9'-7"	8'-10"	8'-1"
155.0	3'-0"	3'-11"	3'-6"	4'-10"	4'-4"	3'-11"	5'-8"	5'-1"	4'-8"	4'-11"	6'-6"	5'-10"	5'-3"	5'-8"	7'-6"	7'-0"	6'-7"	6'-10"	10'-5"	9'-8"	9'-1"	9'-6"	8'-9"	8'-0"
160.0	2'-11"	3'-10"	3'-6"	4'-9"	4'-3"	3'-11"	5'-7"	5'-0"	4'-7"	4'-10"	6'-4"	5'-8"	5'-2"	5'-6"	7'-5"	6'-11"	6'-6"	6'-9"	10'-3"	9'-7"	9'-0"	9'-4"	8'-7"	7'-10"
165.0	2'-11"	3'-10"	3'-5"	4'-8"	4'-2"	3'-10"	5'-6"	4'-11"	4'-6"	4'-10"	6'-3"	5'-7"	5'-1"	5'-5"	7'-4"	6'-10"	6'-5"	6'-8"	10'-2"	9'-5"	8'-11"	9'-3"	8'-6"	7'-9"
170.0	2'-10"	3'-9"	3'-4"	4'-7"	4'-1"	3'-9"	5'-5"	4'-10"	4'-5"	4'-9"	6'-2"	5'-6"	5'-1"	5'-4"	7'-3"	6'-9"	6'-4"	6'-8"	10'-1"	9'-4"	8'-9"	9'-2"	8'-4"	7'-7"
175.0	2'-10"	3'-8"	3'-4"	4'-6"	4'-1"	3'-8"	5'-4"	4'-9"	4'-4"	4'-8"	6'-1"	5'-5"	5'-0"	5'-4"	7'-2"	6'-8"	6'-4"	6'-7"	10'-0"	9'-3"	8'-7"	9'-1"	8'-3"	7'-6"
180.0	2'-9"	3'-8"	3'-3"	4'-6"	4'-0"	3'-8"	5'-3"	4'-9"	4'-4"	4'-7"	6'-0	5'-4"	4'-11"	5'-3"	7'-2"	6'-7"	6'-3"	6'-6"	9'-11"	9'-2"	8'-6"	9'-0"	8'-1"	7'-5"
185.0	2'-9"	3'-7"	3'-3"	4'-5"	3'-11"	3'-7"	5'-2"	4'-8"	4'-3"	4'-6"	5'-11"	5'-4"	4'-10"	5'-2"	7'-1"	6'-7"	6'-2"	6'-5"	9'-10"	9'-1"	8'-5"	8'-11"	8'-0"	7'-4"
190.0	2'-8"	3'-7"	3'-2"	4'-4"	3'-11"	3'-7"	5'-2"	4'-7"	4'-2"	4'-6"	5'-10"	5'-3"	4'-9"	5'-1"	7'-0"	6'-6"	6'-1"	6'-5"	9'-9"	9'-0"	8'-3"	8'-10"	7'-11"	7'-2"
195.0	2'-8"	3'-6"	3'-2"	4'-4"	3'-10"	3'-6"	5'-1"	4'-6"	4'-2"	4'-5"	5'-9"	5'-2"	4'-9"	5'-0"	6'-11"	6'-5"	6'-1"	6'-4"	9'-8"	8'-11"	8'-2"	8'-8"	7'-9"	7'-1"

NOTES : REFER TO ELEVATIONS ON SHEET 2 OF 21

1-. FOR MULLIONS INSTALLED W/O STORM BARS

A) MULLION SPACING SHALL BE SUCH THAT MAXIMUM SLAT SPAN SHALL NOT BE EXCEEDED

2-. FOR MULLIONS INSTALLED W/ STORM BARS & HEADERS

A) MULLION SPACING SHALL BE SUCH THAT MAXIMUM HEADER SPAN SHALL NOT BE EXCEEDED

B) STORM BAR SPACING SHALL BE SUCH THAT MAXIMUM SLAT SPAN SHALL NOT BE EXCEEDED

10/20/05

F.B.C. (HIGH VELOCITY HURRICANE ZONE)

TILTECO INC.
TILLIT TESTING & ENGINEERING COMPANY
6355 N.W. 36th. St. Ste. 305, VIRGINIA GARDENS, FL. 33166
Phone : (305)871-1330 . Fax : (305)871-1531
EB-0006719
WALTER A. TILLIT Jr., P. E.
FLORIDA Lic. 44167

1200 SERIES EXTRUDED ROLL UP SHUTTERS

JORDAN'S ALUMINUM, INC.
5731 DEWEY STREET
HOLLYWOOD, FL. 33023

REV. NO	DESCRIPTION	DATE	REV. No	DESCRIPTION	DATE
1	–	–	3	–	–
2	–	–	4	–	–

DRAWN BY: M.C.V.

8/10/05 DATE

05-240 DRAWING No

SHEET 21 OF 21