MIAMI-DADE COUNTY

BUILDING CODE COMPLIANCE OFFICE (BCCO)
PRODUCT CONTROL DIVISION

MIAMI-DADE COUNTY, FLORIDA
METRO-DADE FLAGLER BUILDING
140 WEST FLAGLER STREET, SUITE 1603
MIAMI, FLORIDA 33130-1563
(305) 375-2901 FAX (305) 375-2908
www.buildingcodeonline.com

NOTICE OF ACCEPTANCE (NOA)

Traco Security Windows & Doors, Inc.
71 Progress Avenue
Cranberry Township, PA 16066

SCOPE:

This NOA is being issued under the applicable rules and regulations governing the use of construction materials. The documentation submitted has been reviewed by Miami-Dade County Product Control Division and accepted by the Board of Rules and Appeals (BORA) to be used in Miami Dade County and other areas where allowed by the Authority Having Jurisdiction (AHJ).

This NOA shall not be valid after the expiration date stated below. The Miami-Dade County Product Control Division (In Miami Dade County) and/or the AHJ (in areas other than Miami Dade County) reserve the right to have this product or material tested for quality assurance purposes. If this product or material fails to perform in the accepted manner, the manufacturer will incur the expense of such testing and the AHJ may immediately revoke, modify, or suspend the use of such product or material within their jurisdiction. BORA reserves the right to revoke this acceptance, if it is determined by Miami-Dade County Product Control Division that this product or material fails to meet the requirements of the applicable building code.

This product is approved as described herein, and has been designed to comply with the Florida Building Code, including the High Velocity Hurricane Zone.

DESCRIPTION: Series "Doral 3" Outswing Aluminum Patio Door (S.M.I.)

APPROVAL DOCUMENT: Drawing No. **04-113-001A**, titled "Series "Doral 3" Outswing Aluminum Patio Door -S.M.I.", sheets 1 through 6 of 6, prepared by Traco Windows & Doors Inc., dated 01/21/04 with revision "1" on 09/06/05, signed and sealed by Frank L.Bennardo, P.E., bearing the Miami-Dade County Product Control Revision stamp with the Notice of Acceptance number and expiration date by the Miami-Dade County Product Control Division.

MISSILE IMPACT RATING: Small Missile Impact

LABELING: Each unit shall bear a permanent label with the manufacturer's name or logo, city, state and following statement: "Miami-Dade County Product Control Approved", unless otherwise noted herein.

RENEWAL of this NOA shall be considered after a renewal application has been filed and there has been no change in the applicable building code negatively affecting the performance of this product.

TERMINATION of this NOA will occur after the expiration date or if there has been a revision or change in the materials, use, and/or manufacture of the product or process. Misuse of this NOA as an endorsement of any product, for sales, advertising or any other purposes shall automatically terminate this NOA. Failure to comply with any section of this NOA shall be cause for termination and removal of NOA.

ADVERTISEMENT: The NOA number preceded by the words Miami-Dade County, Florida, and followed by the expiration date may be displayed in advertising literature. If any portion of the NOA is displayed, then it shall be done in its entirety.

INSPECTION: A copy of this entire NOA shall be provided to the user by the manufacturer or its distributors and shall be available for inspection at the job site at the request of the Building Official.

This NOA **revises NOA # 04-0122.16** and, consists of this page 1 and evidence page E-1, and E-2, as well as approval document mentioned above.

The submitted documentation was reviewed by **Herminio F. Gonzalez, P.E., Director, BCCO**

PRODUCT CONTROL ACCEPTED 1/20/06

Traco Security Windows & Doors, Inc.

NOTICE OF ACCEPTANCE: EVIDENCE PAGE

A. DRAWINGS

1. Manufacturer's die drawings and sections.
2. Drawing No. **04-113-001A**, titled "Series Doral 3 Outswing Aluminum Patio Door - S.M.I.", sheets 1 through 6 of 6, prepared by Traco Windows & Doors Inc., 01/21/04 with revision "**1**" on 09/06/05, signed and sealed by Frank L.Bennardo, P.E.

B. TESTS

1. Test reports on 1) Air Infiltration Test, per FBC, TAS 202-94
   2) Uniform Static Air Pressure Test, Loading per FBC, TAS 202-94
   3) Water Resistance Test, per FBC, TAS 202-94
   4) Large Missile Impact Test per FBC, TAS 201-94
   5) Cyclic Wind Pressure Loading per FBC, TAS 203-94
   6) Forced Entry Test, per FBC 2411 3.2.1 and TAS 202-94

   Along with installation diagram of an outswing aluminum patio door, prepared by Hurricane Test Laboratory, Inc., Test Report No.**0021-1007-03** with specimen number 2,4,6, dated 10/29-11/25/03, signed and sealed by Vinu J. Abraham, P.E.
   "Submitted under NOA# 04-0122.16"
2. Test reports on 1) Uniform Static Air Pressure Test, Loading per FBC, TAS 202-94
   2) Cyclic Wind Pressure Loading per FBC, TAS 203-94
   3) Small Missile Impact Test per FBC, TAS 201-94

   Along with installation diagram of an outswing aluminum patio door, prepared by Hurricane Test Laboratory, Inc., Test Report No.**0021-1007-03** with specimen number 5, dated 11/18-19/03, signed and sealed by Vinu J. Abraham, P.E.
   "Submitted under NOA# 04-0122.16"
3. Test reports on 1) Uniform Static Air Pressure Test, Loading per FBC, TAS 202-94
   2) Cyclic Wind Pressure Loading per FBC, TAS 203-94
   3) Large Missile Impact Test per FBC, TAS 201-94

   Along with installation diagram of an outswing aluminum patio door, prepared by Hurricane Test Laboratory, Inc., Test Report No.**0021-1007-03** with specimen number 1, dated 10/14-16/03, signed and sealed by Vinu J. Abraham, P.E.
   "Submitted under NOA# 04-0122.16"

C. CALCULATIONS

1. Revised Anchor Calculations and structural analysis, prepared by AL-Farooq Corporation, dated 09/06/05, signed and sealed by Humayoun Farooq, P.E.
   Complies with ASTM E1300-98
   No 1/3 stress increase used in anchors into masonry or steel substrate.

for M Thall

Herminio F. Gonzalez, P.E.
Director, Building Code Compliance Office
NOA No 05-1003.08
Expiration Date: April 22, 2009
Approval Date: February 09, 2006

NOTICE OF ACCEPTANCE: EVIDENCE PAGE

D. QUALITY ASSURANCE

1. Miami Dade Building Code Compliance Office (BCCO).

E. MATERIAL CERTIFICATIONS

1. Notice of Acceptance No. **01-0205.02** issued to "Solutia Inc." for "SaflexIIG PVB Interlayer for Laminated Glass" dated 05/17/01, expiring on 05/21/06.

F. STATEMENTS

1. Statement letter of code compliance, dated 09/06/05, signed and sealed by Frank L. Bennardo, P.E.
2. Statement letter of no financial interest, dated 09/06/05, signed and sealed by Frank L. Bennardo, P.E.

G. OTHER

1. Letter from the consultant, dated 12/12/05, stating that the product is in compliance with the Florida Building Code (FBC).
2. Notice of Acceptance No. **04-0122.16**, issued to TRACO Windows & Doors, Inc., "Series Doral 3 Outswing Aluminum Patio Door- S.M.I.", approved on 04/22/04 and expiring on 04/22/09.

for M Hawk

Herminio F. Gonzalez, P.E.
Director, Building Code Compliance Office
NOA No 05-1003.08
Expiration Date: April 22, 2009
Approval Date: February 09, 2006

SMALL MISSILE IMPACT RESISTANT OUTSWING DOOR WITH SIDELITES

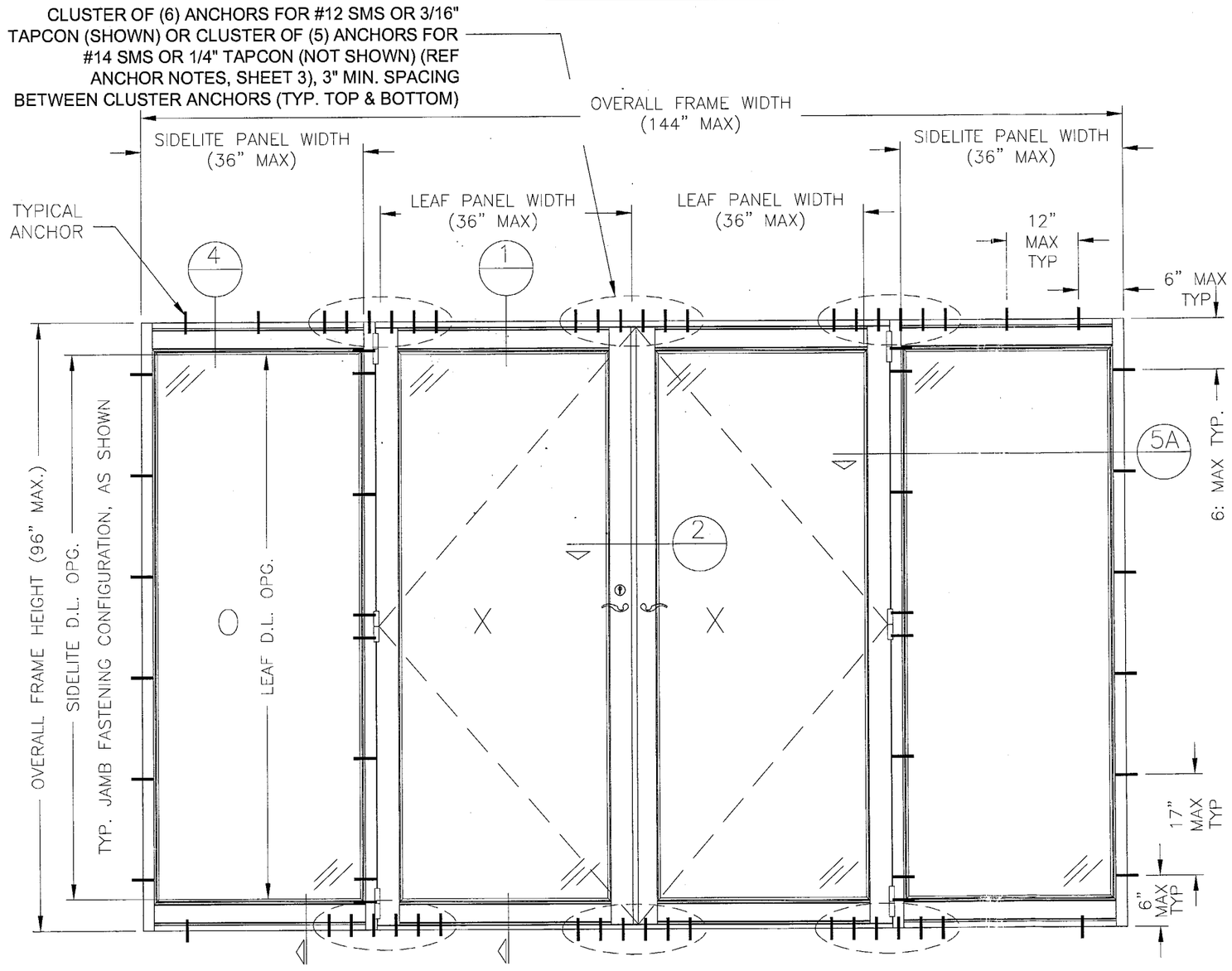

A EXTERIOR ELEVATION: SNAP-MULLION SIDELITES

AS SHOWN, OR OXX, XXO, OXO, XO, OX, or XX CONFIG
USE TYP. JAMB FASTENING CONFIGURATION FOR ALL CASES, AS SHOWN
(N.T.S.)

GENERAL NOTES:

1. THE SWING DOOR SYSTEM DESCRIBED HEREIN HAS BEEN DESIGNED AND TESTED IN COMPLIANCE WITH THE FLORIDA BUILDING CODE 2004 (HIGH VELOCITY HURRICANE ZONE) AND MIAMI-DADE COUNTY PROTOCOLS TAS 201, 202 & 203.

2. NO 33-1/3% INCREASE IN ALLOWABLE STRESS HAS BEEN USED IN THE DESIGN OF THIS SYSTEM. WIND LOAD DURATION FACTOR Cd=1.6 HAS BEEN USED FOR WOOD ANCHOR DESIGN.

3. POSITIVE AND NEGATIVE DESIGN PRESSURES CALCULATED FOR USE WITH THIS DOOR SYSTEM SHALL BE DETERMINED BY OTHERS ON A JOB-SPECIFIC BASIS IN ACCORDANCE WITH THE GOVERNING CODE.

4. THE DOOR SYSTEM DETAILED HEREIN HAS BEEN TESTED PER MIAMI-DADE COUNTY PROTOCOLS TAS-201, TAS-202, & TAS-203 AS REFERENCED IN TEST REPORT #0021-1007-03 BY HURRICANE TEST LABORATORY (HTL).

5. THE DOOR SYSTEM DETAILED HEREIN IS GENERIC AND DOES NOT PROVIDE INFORMATION FOR A SPECIFIC SITE. FOR SITE CONDITIONS DIFFERENT FROM THE CONDITIONS DETAILED HEREIN, A LICENSED ENGINEER OR REGISTERED ARCHITECT SHALL APPLY FOR ONE-TIME APPROVAL AND PREPARE SITE SPECIFIC DOCUMENTS FOR USE IN CONJUNCTION WITH THIS DOCUMENT.

6. PERMIT HOLDER SHALL VERIFY THE ADEQUACY OF THE EXISTING STRUCTURE TO WITHSTAND SUPERIMPOSED LOADS. WOOD BUCKS (NOT BY TRACO) SHALL BE ANCHORED PROPERLY TO TRANSFER LOADS TO THE EXISTING STRUCTURE.

7. DOORS PANELS GLAZED WITH 7/16" LAMINATED GLASS ARE SMALL MISSILE IMPACT APPROVED AND SHALL BE PROTECTED WITH MIAMI-DADE COUNTY IMPACT RESISTANT SHUTTERS FOR INSTALLATIONS UP TO 30 FEET ABOVE GRADE. NO PROTECTION REQUIRED FOR INSTALLATIONS ABOVE 30 FEET ABOVE GRADE..

8. ALL STEEL IN CONTACT WITH ALUMINUM SHALL BE PAINTED OR PLATED.

DESIGN PRESSURES:

7/16" LAMINATED GLASS
(WITH 0.090" PVB INTERLAYER ONLY)

+55 PSF / -60 PSF

PRODUCT REVIEWED
as complying with the Florida Building Code
Acceptance No. 05-1003.08
Expiration Date 04/22/09
By
Miami Dade Product Control Division

FRANK L. BENNARDO, P.E.
PE0046549
09/27/2005

FRANK L. BENNARDO, P.E., INC.
CONSULTING ENGINEERS
4441 NORTH DIXIE HIGHWAY
BOCA RATON, FL 33431
(561) 391-2888 FAX: (561) 391-2862
WWW.FLBENGINEERING.COM
CERTIFICATE OF AUTHORIZATION: #9885

TRACO
Windows & Doors Inc.
71 Progress Avenue
Cranberry Township, PA 16166

SERIES DORAL 3
OUTSWING ALUMINUM PATIO DOOR
(SMALL MISSILE)

REMARKS	DRWN	CHKD	DATE
ORIGINAL	MEH	FLB	01/21/04
2004 FBC	CL	FLB	09/06/05

04-113-001A

PAGE SCALE:
DESCRIPTION:

1 6

09/27/2005 - 2:49pm Andrel F:\01 Project Files\Traco\2004 Jobs\Traco Doral 3 Outswing Door Small Missile (04-113-001a)\04-113-001a Traco Doral 3 Outswing Door + Sidelites (Small Missile) rev0.3.dwg

SMALL MISSILE IMPACT RESISTANT OUTSWING DOOR WITH SIDELITES

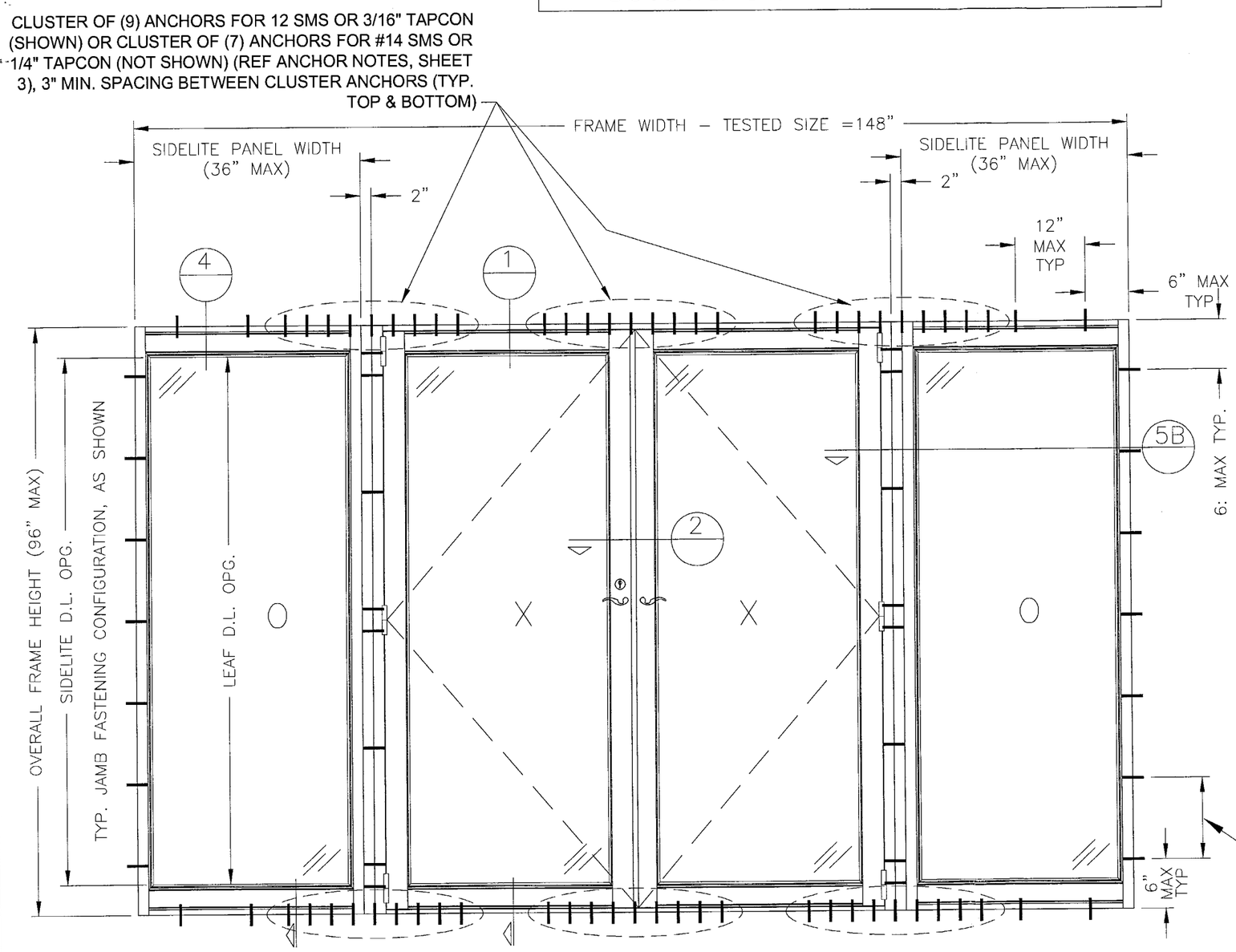

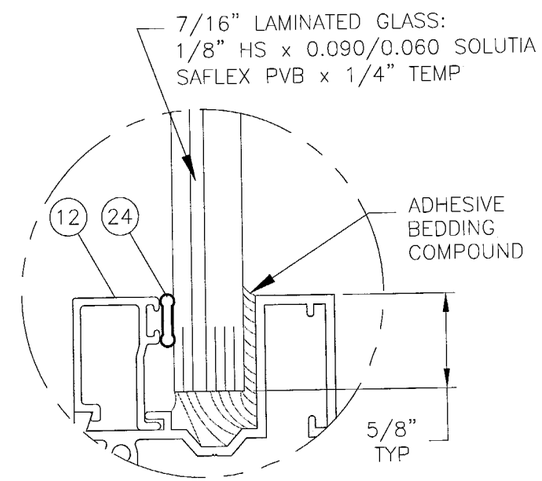

C GLAZING DETAIL (LEAF OR SIDELITE)
FULL SCALE

10.5" MAX TYP FOR #12 SMS OR 3/16" TAPCON (NOT SHOWN) AND 14" MAX TYP FOR #14 SMS OR 1/4" TAPCON (SHOWN)

B EXTERIOR ELEVATION: TUBE-MULLION SIDELITES
AS SHOWN, OR OXX, XXO, OXO, XO, OX, XX, O, or X CONFIG
USE TYP. JAMB FASTENING CONFIGURATION FOR ALL CASES, AS SHOWN
(N.T.S.)

DESIGN PRESSURES:

7/16" LAMINATED GLASS
(WITH 0.060" OR 0.090" PVB INTERLAYER)

+90 PSF / -90 PSF

PRODUCT REVISED
as complying with the Florida Building Code
Acceptance No. 05-1003.08
Expiration Date 04/22/09
By [signature]
Miami Dade Product Control Division

FRANK L. BENNARDO, P.E.
PE0046549
09/27/2005

FRANK L. BENNARDO, P.E., INC.
CONSULTING ENGINEERS
4441 NORTH DIXIE HIGHWAY
BOCA RATON, FL 33431
(561) 391-2888 FAX: (561) 391-2862
WWW.FLBENGINEERING.COM
CERTIFICATE OF AUTHORIZATION: #9885

TRACO
Windows & Doors Inc.
71 Progress Avenue
Cranberry Township, PA 16166

SERIES DORAL 3
OUTSWING ALUMINUM PATIO DOOR
(SMALL MISSILE)

REMARKS	DRWN	CHKD	DATE
ORIGINAL	MEH	FLB	01/21/04
2004 FBC	CL	FLB	09/06/05

04-113-001A
PAGE SCALE:
DESCRIPTION:

2

6

F:\01 Project Files\Traco\2004 Jobs\Traco Doral 3 Outswing Door Small Missile (04-113-001a)\04-113-001a Traco Doral 3 Outswing Door + Sidelites (Small Missile) rev0.3.dwg
09/27/2005 - 2:48pm Andrel

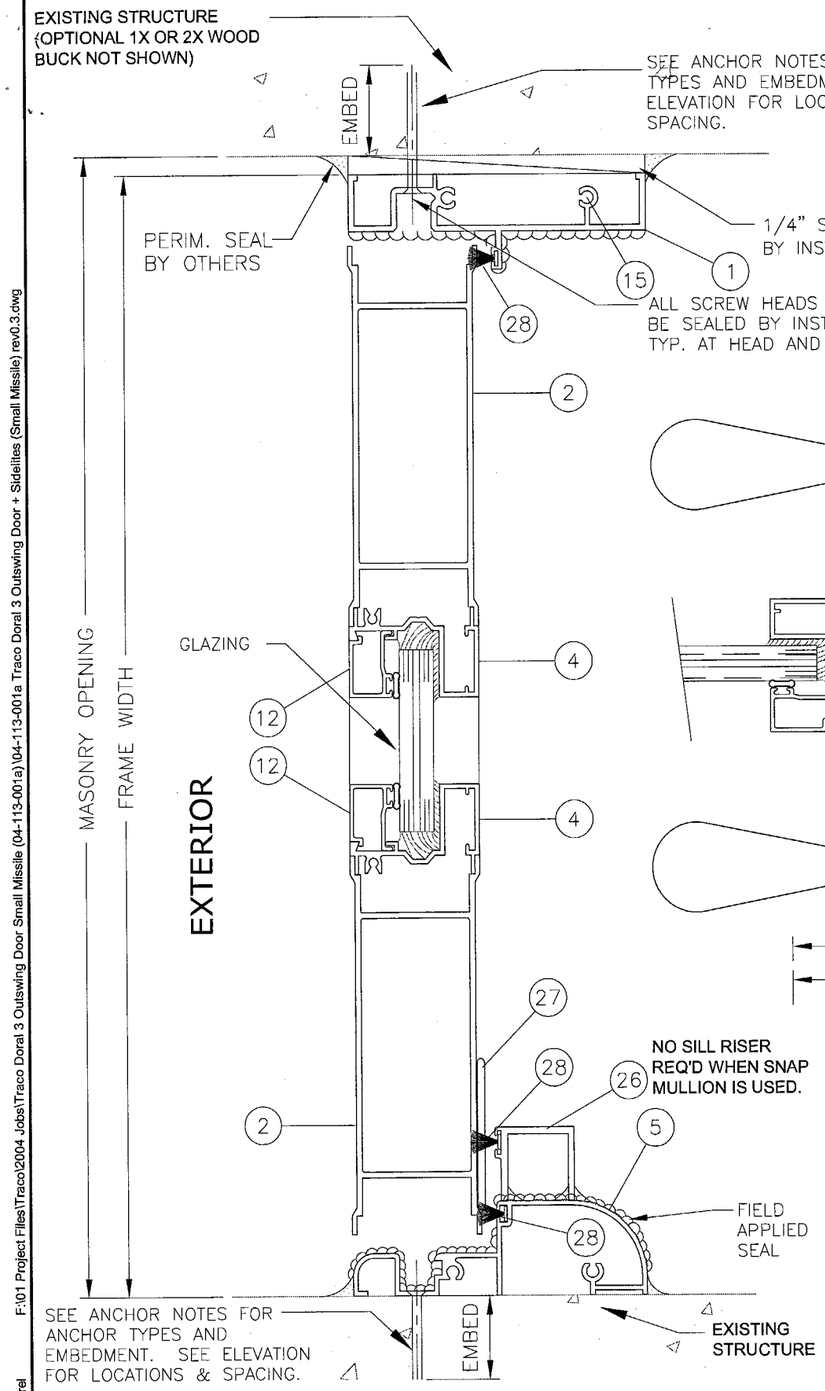

1 SECTION OF RESIDENTIAL DOOR
HALF SCALE

NOTE:
EXTERIOR AND INTERIOR FINISHES, BREAK METALS AND FLASHING BY OTHERS.

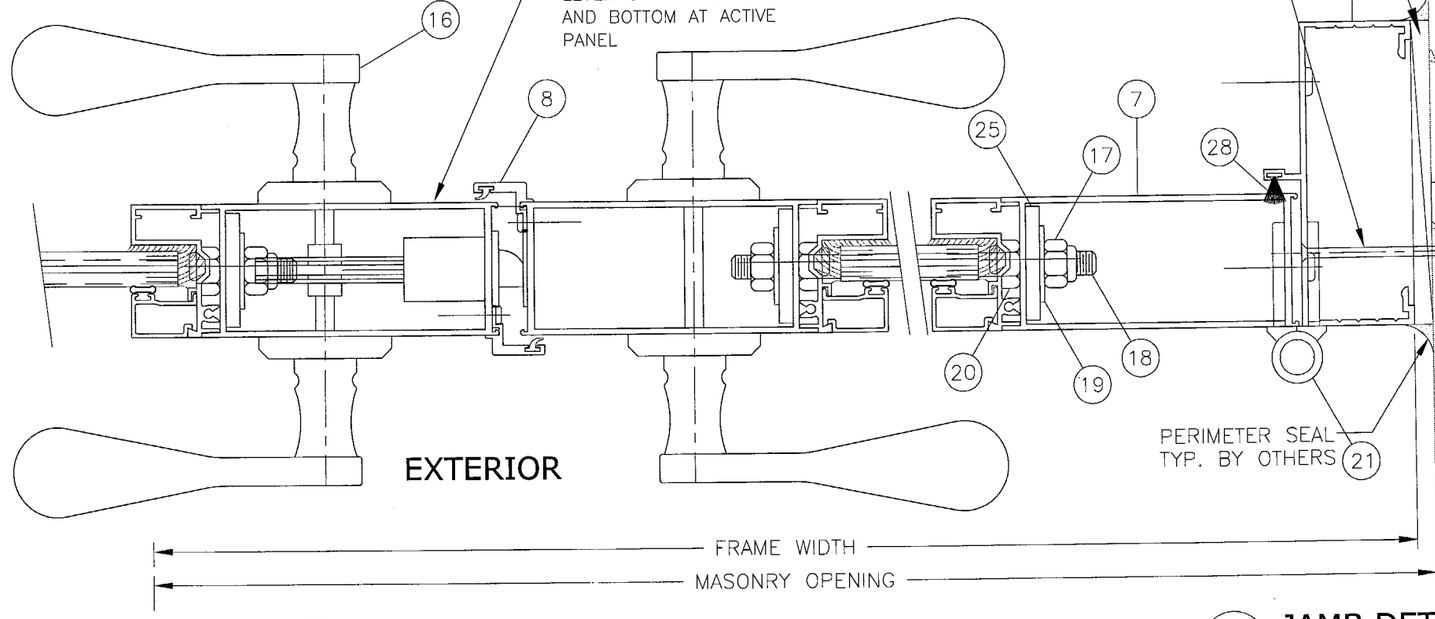

2 ASTRAGAL DETAIL
HALF SCALE

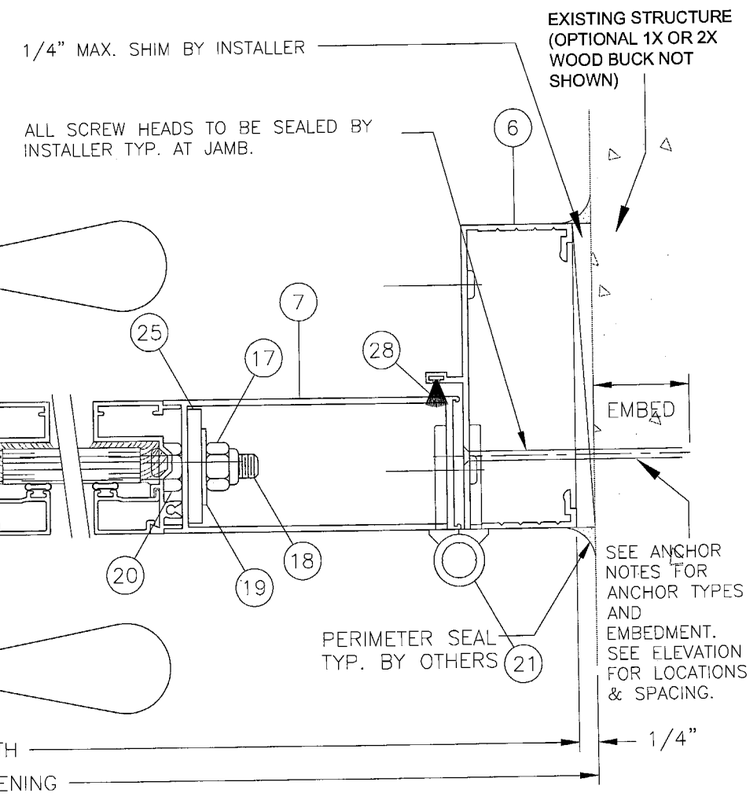

3 JAMB DETAIL
HALF SCALE

ANCHOR NOTES:

1. ANCHORS SHALL BE INSTALLED IN ACCORDANCE WITH MANUFACTURER'S RECOMMENDATIONS.
2. ANCHOR EMBEDMENT SHALL BE INTO BASE MATERIAL, EXCLUDING STUCCO OR OTHER WALL FINISH.
3. BASE MATERIAL SHALL BE WOOD (G=0.55 OR GREATER SPECIFIC GRAVITY), GROUT-FILLED BLOCK (MIN 2000 psi COMPRESSIVE STRENGTH FOR GROUT), OR CONCRETE (MIN 3000 PSI).
4. SEE EXTERIOR ELEVATIONS FOR ANCHOR LOCATIONS AND SPACING.
5. ENSURE MINIMUM OF 2-1/2" EDGE DISTANCE FOR ALL ANCHORS INTO GROUT-FILLED BLOCK OR CONCRETE, AND MINIMUM OF 1-1/2" EDGE DISTANCE FOR ALL WOOD ANCHORS.
6. ANCHOR OPTIONS FOR INSTALLATION ARE AS FOLLOWS:

TO 2x WOOD BUCK OR WOOD STRUCTURE
#12 SMS, 3/16" OR 1/4" TAPCONS (ITW OR ELCO) WITH 1-1/2" MINIMUM EMBEDMENT.

TO CONC OR GROUT-FILLED BLOCK
(DIRECTLY OR THRU 1x OR 2x WOOD BUCK) 3/16" OR 1/4" TAPCONS (ITW OR ELCO) WITH 1-1/4" MINIMUM EMBEDMENT TO CONC OR GROUT-FILLED BLOCK.

PRODUCT REVISED
in complying with the Florida Building Code
Acceptance No. 05-1003.08
Expiration Date 04/22/09
By
Miami Dade Product Control Division

FRANK L. BENNARDO, P.E.
PE0046549
09/27/2005

FRANK L. BENNARDO, P.E., INC.
CONSULTING ENGINEERS
4441 NORTH DIXIE HIGHWAY
BOCA RATON, FL 33431
(561) 391-2888 FAX: (561) 391-2862
WWW.FLBENGINEERING.COM
CERTIFICATE OF AUTHORIZATION: #9885

TRACO
Windows & Doors Inc.
71 Progress Avenue
Cranberry Township, PA 16166

SERIES DORAL 3
OUTSWING ALUMINUM PATIO DOOR
(SMALL MISSILE)

REMARKS	DRWN	CHKD	DATE
ORIGINAL	MEH	FLB	01/21/04
2004 FBC	CL	FLB	09/06/05

04-113-001A
PAGE SCALE:
DESCRIPTION:

3 | 6

F:\01 Project Files\Traco\2004 Jobs\Traco Doral 3 Outswing Door Small Missile (04-113-001a)\04-113-001a Traco Doral 3 Outswing Door + Sidelites (Small Missile) rev0.3.dwg
09/27/2005 - 2:48pm Andrel

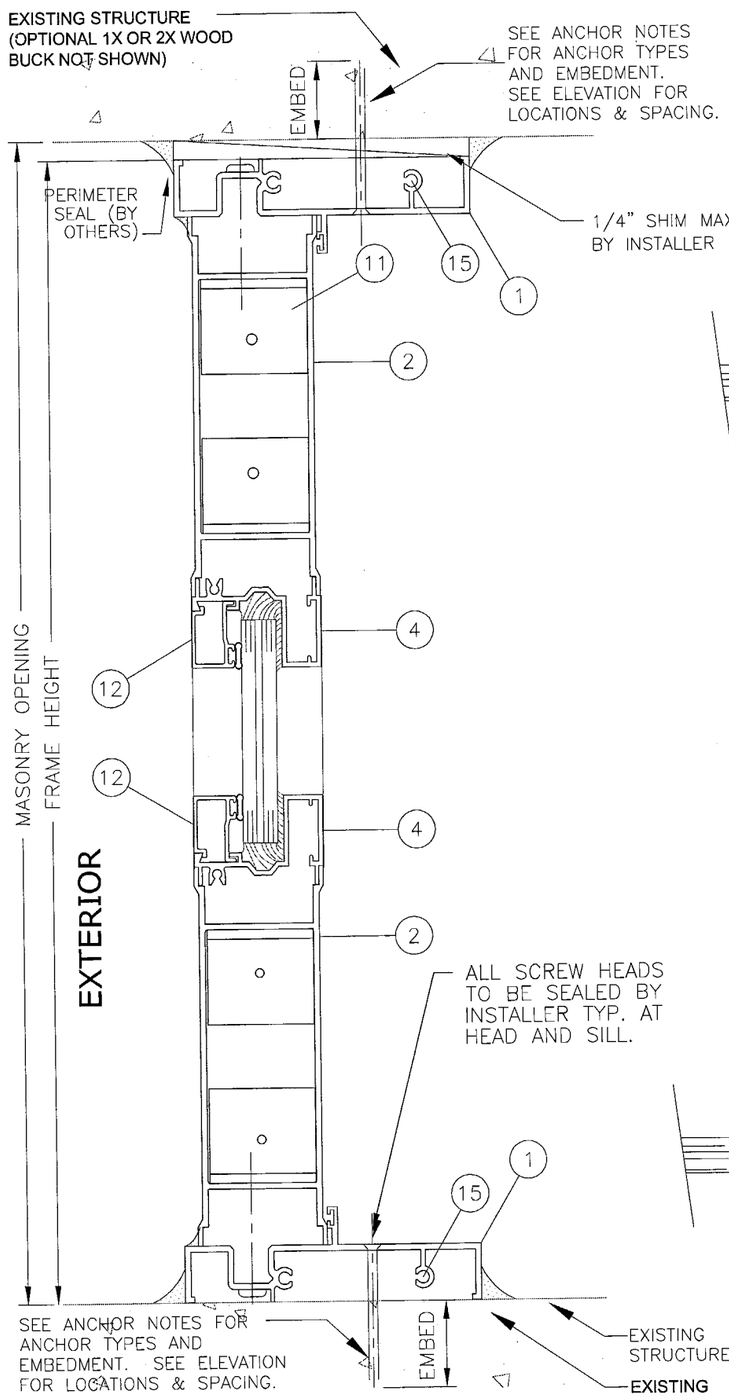

4 SECTION OF SIDELITE
HALF SCALE

NOTE:
EXTERIOR AND INTERIOR FINISHES, BREAK METALS AND FLASHING BY OTHERS.

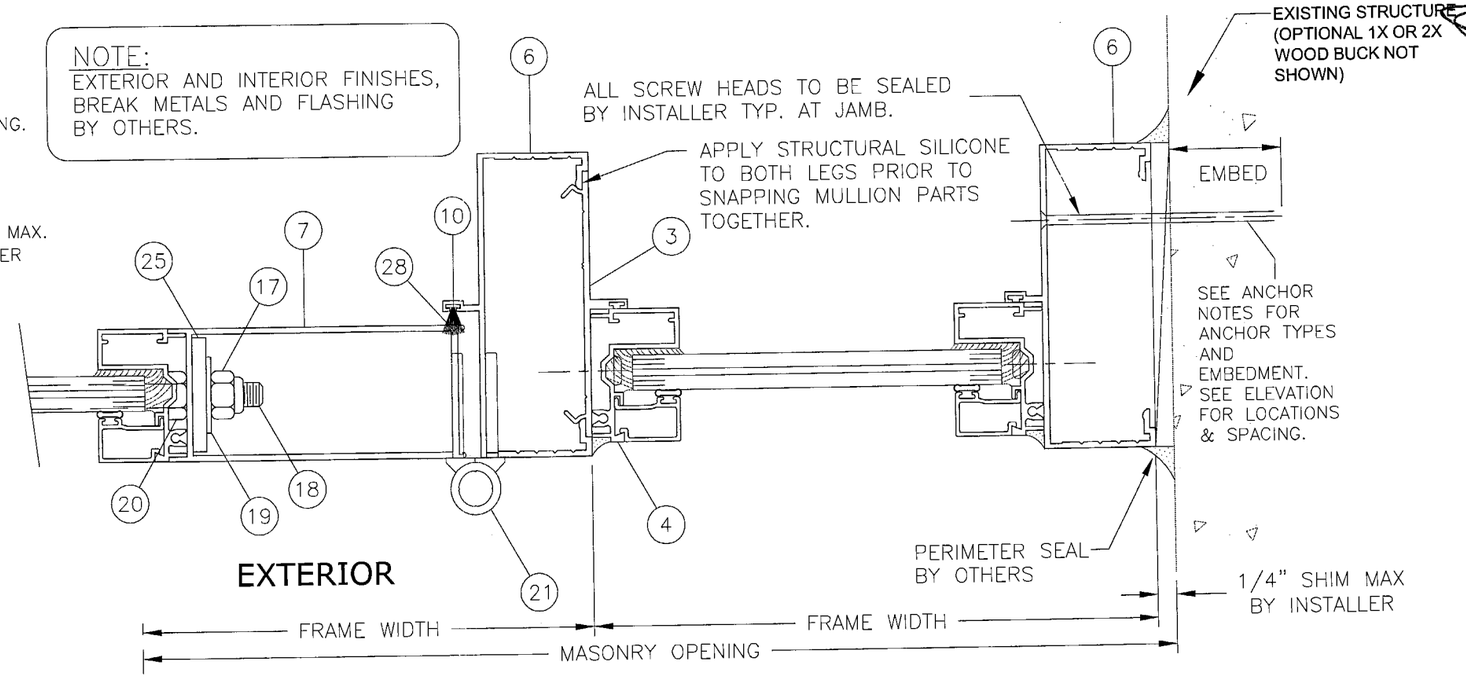

5a SECTION OF SNAP-MULLION SIDELITE
HALF SCALE

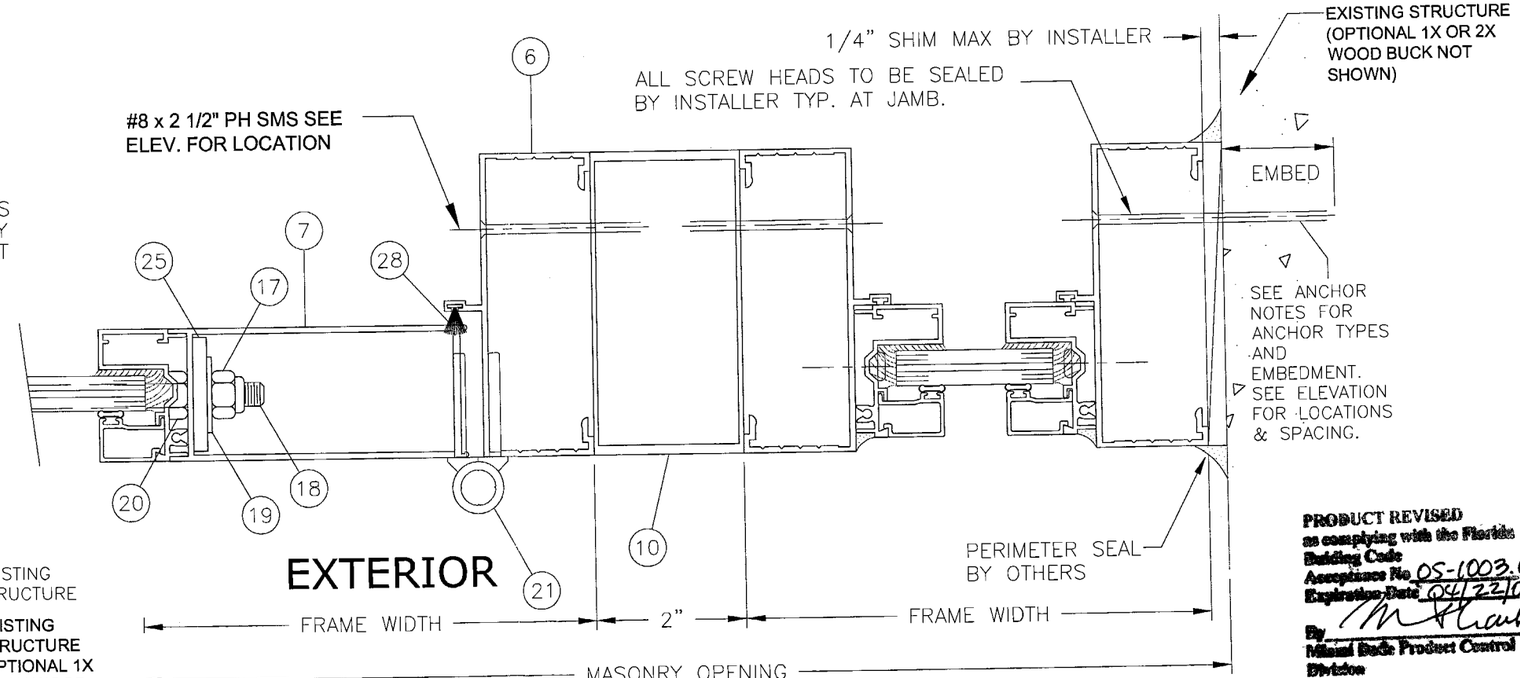

5b SECTION OF TUBE-MULLION SIDELITE
HALF SCALE

PRODUCT REVISED
as complying with the Florida Building Code
Acceptance No. 05-1003.08
Expiration Date 04/22/09
By
Miami Dade Product Control Division

FRANK L. BENNARDO, P.E.
PE0046549
09/27/2005

FRANK L. BENNARDO, P.E., INC.
CONSULTING ENGINEERS
4441 NORTH DIXIE HIGHWAY
BOCA RATON, FL 33431
(561) 391-2888 FAX: (561) 391-2862
WWW.FLBENGINEERING.COM
CERTIFICATE OF AUTHORIZATION: #9885

TRACO
Windows & Doors Inc.
71 Progress Avenue
Cranberry Township, PA 16166

SERIES DORAL 3
OUTSWING ALUMINUM PATIO DOOR
(SMALL MISSILE)

REMARKS	DRWN	CHKD	DATE
ORIGINAL	MEH	FLB	01/21/04
2004 FBC	CL	FLB	09/06/05

04-113-001A

PAGE SCALE:
DESCRIPTION:

4

F:\01 Project Files\Traco\2004 Jobs\Traco Doral 3 Outswing Door Small Missile (04-113-001a)\04-113-001a Traco Doral 3 Outswing Door + Sidelites (Small Missile) rev0.3.dwg
09/27/2005 - 2:48pm Andrei

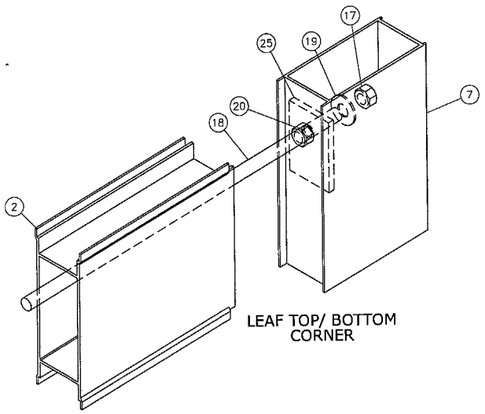

LEAF TOP/ BOTTOM CORNER

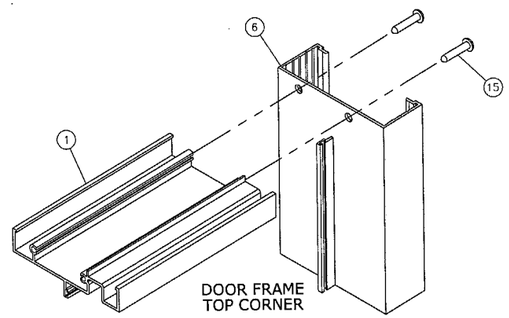

DOOR FRAME TOP CORNER

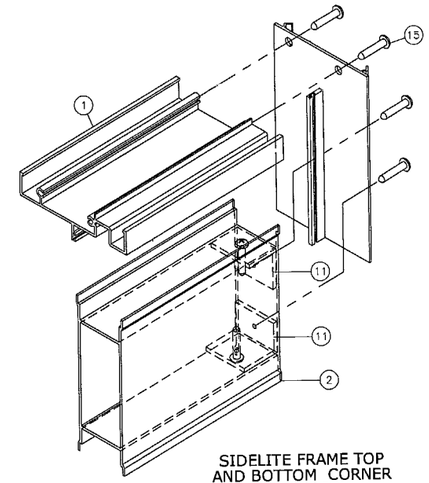

SIDELITE FRAME TOP AND BOTTOM CORNER AT MULLION

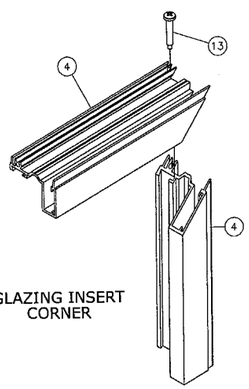

GLAZING INSERT CORNER

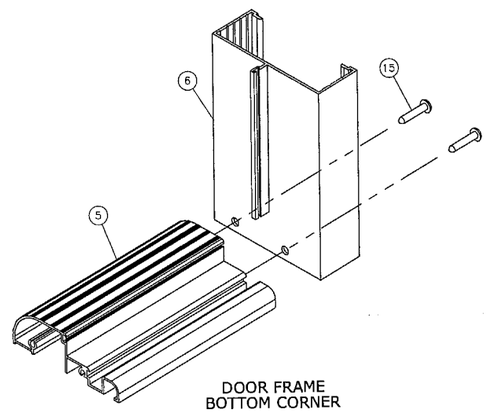

DOOR FRAME BOTTOM CORNER

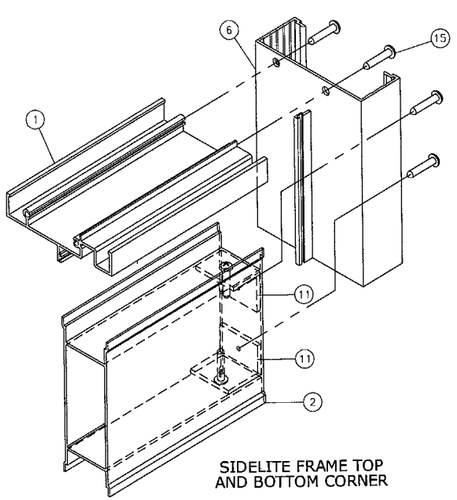

SIDELITE FRAME TOP AND BOTTOM CORNER

SEALANTS:
ALL FRAME AND LEAF CORNERS, INSTALLATION SCREWS AT SILL AND JAMBS AND BOTTOM GLAZING BEAD SHALL BE SEALED WITH SCHEE MOREHEAD 5504 SEALANT.

HINGES:
4" LONG ALUM. BUTT HINGES WITH .312 DIA X 2-1/2" ALUM PIN, BRASS SPACER AND NYLON CAPS AT 3 1/2" FROM TOP & BOTTOM AND AT MIDSPAN

LOCKS:
STANDARD STEEL THROW BOLT LOCK, KEY OPERATED ON EXTERIOR AND THUMB TURN ON INTERIOR 39 1/2" FROM BOTTOM AT ACTIVE LEAF LOCK STILE

CONVENTIONAL LOCKSET WITH LEVER TYPE OPERATOR HANDLE AT ACTIVE LEAF LOCK STILE NEAR MIDSPAN

STANDARD FLUSH BOLTS, MANUALLY OPERATED AT TOP AND BOTTOM OF EACH ACTIVE AND INACTIVE LEAF

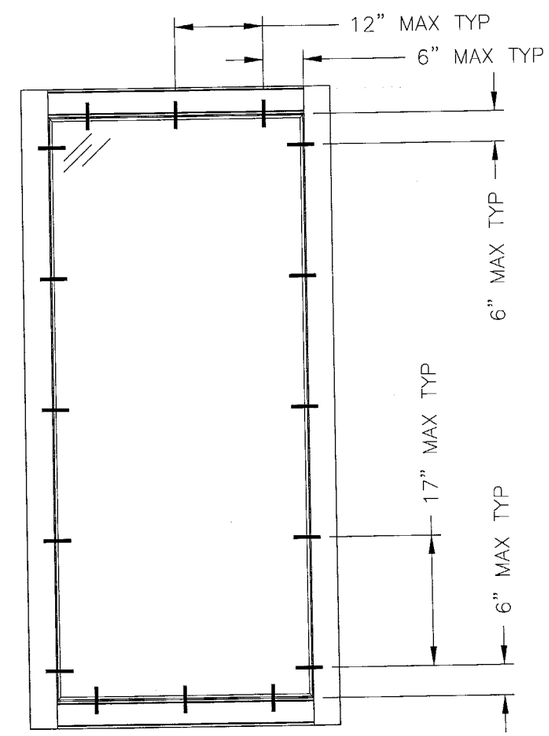

GLAZING INSERT FASTENER SPACING

PRODUCT REVISED
as complying with the Florida Building Code
Acceptance No 05-1003.08
Expiration Date 04/22/09
By [signature]
Miami Dade Product Control Division

FRANK L. BENNARDO, P.E.
PE0046549
09/27/2005

FRANK L. BENNARDO, P.E., INC.
CONSULTING ENGINEERS
4441 NORTH DIXIE HIGHWAY
BOCA RATON, FL 33431
(561) 391-2888 FAX: (561) 391-2862
WWW.FLBENGINEERING.COM
CERTIFICATE OF AUTHORIZATION: #9885

TRACO
Windows & Doors Inc.
71 Progress Avenue
Cranberry Township, PA 16166

SERIES DORAL 3
OUTSWING ALUMINUM PATIO DOOR
(SMALL MISSILE)

REMARKS	DRWN	CHKD	DATE
ORIGINAL	MEH	FLB	01/21/04
2004 FBC	CL	FLB	09/06/05

04-113-001A

PAGE SCALE:
DESCRIPTION:

5

6

F:\01 Project Files\Traco\2004 Jobs\Traco Doral 3 Outswing Door Small Missile (04-113-001a)\04-113-001a Traco Doral 3 Outswing Door + Sidelites (Small Missile) rev0.3.dwg
09/27/2005 - 2:48pm Andrel

MATERIAL LIST

ITEM NO.	PART NUMBER	QUANTITY	DESCRIPTION	MATERIAL	MANF./SUPPLIER/REMARKS
1	050-338	1/DOOR 2/SIDELITE	ATRIUM FRAME HEAD ATRIUM FRAME HEAD OR SILL	6063-T6	TIFTON OR EQUIV.
2	050-389	2/ LEAF	DOOR LEAF TOP & BOTTOM RAIL	6063-T5	ALUMAX OR EQUIV.
3	050-002	1/ SIDELITE	SNAP CANTILEVER	6063-T5	–
4	050-763	4/ GLASS LITE	GLAZING SUB FRAME	6063-T6	TIFTON OR EQUIV.
5	050-138	1 @ DOOR	THREASHOLD	6063-T5	ALUMAX OR EQUIV.
6	050-292	2/ DOOR 1/ SIDELITE	ATRIUM FRAME JAMB	6063-T5	TIFTON OR EQUIV.
7	051-394	2/ LEAF	RESIDENTIAL DOOR PANEL VERTICAL STILE	6063-T5	TIFTON OR EQIV.
8	050-455	1/ LEAF	GAP CLOSURE	6063-T5	TIFTON OR EQUIV.
9	–	–	–	–	–
10	H-1006	AS REQD.	2" X 4" TUBE MULLION	6063-T5	TRECO OR EQUIV.
11	050-124	AS REQD.	1" x 1 1/4" X 1/8" ANGLE	ALUMINUM	–
12	050-764	AS REQD.	GLAZING BEAD	6063-T6	TIFTON OR EQUIV.
13	012-00-401	AS REQD.	#10 X 1/2" FLAT HEAD SCREW	–	–
14	AS REQD.	–	1/8" SHIM	PLASTIC	–
15	–	8/ FRAME	#10 X 1" DOOR FRAME ASSEMBLY SCREW	–	–
16	007-14-039A	AS REQD.	DOOR HANDLE	–	MARBOLLO
17	–	4/ LEAF	1/2" SELF LOCK NUT	STEEL	–
18	–	2/ LEAF	1/2" ROD (2 X PANELS)	STEEL	–
19	–	4/ LEAF	1/2" FLAT WASHER	STEEL	–
20	–	4/ LEAF	1/2" REGULAR NUT	–	–
21	051-181	3/ LEAF	HINGES	–	–
22	007-10-051	2/ LEAF	STANDARD FLUSH BOLT	–	–
23	–	4	#8 x 1/2" SMS	–	–
24	20-4164	AS REQD.	BULB VINYL	VINYL	–
25	–	4/ LEAF	BLOCK ROD GUIDE	–	–
26	050-10-765	1	SILL RISER	ALUMINUM	SILL RISER
27	–	1/ LEAF	1 X .050 ALUM BAR (BETWEEN VERTICALS)	ALUMINUM	–
28	047-10-014	AS REQD.	FIN SEAL WEATHER-STRIPPING	–	–

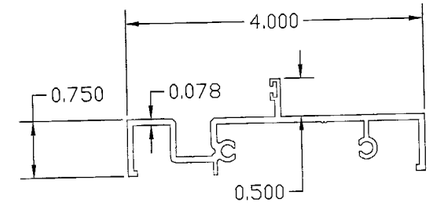

ATRIUM FRAME HEAD/SILL

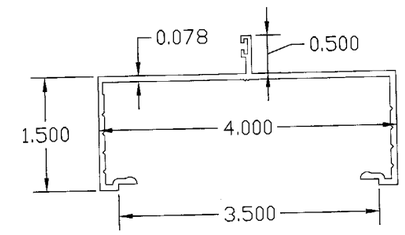

DOOR FRAME JAMB

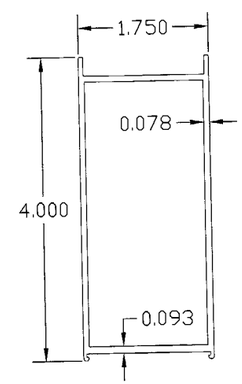

DOOR STILE

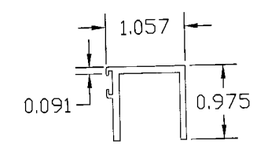

SILL RISER

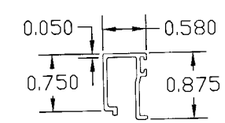

GLAZING BEAD

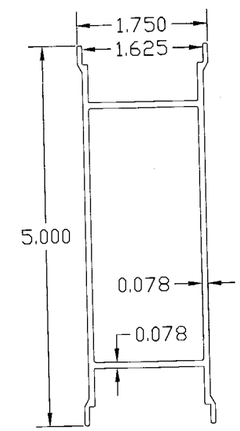

DOOR TOP/ BOTTOM RAIL

GAP CLOSURE

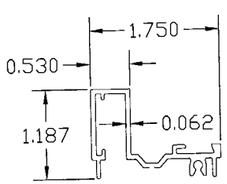

GLAZING SUBFRAME

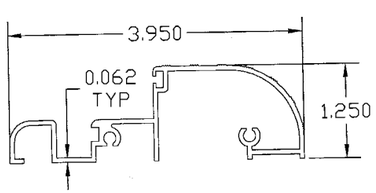

THRESHOLD

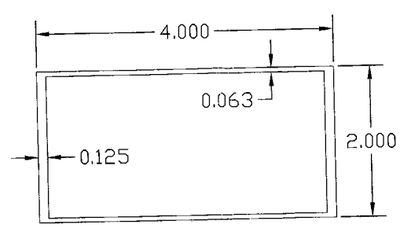

H-1006 TUBE MULLION

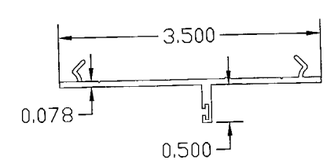

DOOR STOP

PRODUCT REVIEWED
as complying with the Florida
Building Code
Acceptance No. 05-1003.08
Expiration Date 04/22/09
By
Miami Dade Product Control
Division

FRANK L. BENNARDO, P.E.
PE0046549
09/27/2005

FRANK L. BENNARDO, P.E., INC.
CONSULTING ENGINEERS
4441 NORTH DIXIE HIGHWAY
BOCA RATON, FL 33431
(561) 391-2888 FAX: (561) 391-2862
WWW.FLBENGINEERING.COM
CERTIFICATE OF AUTHORIZATION: #9885

TRACO
Windows & Doors Inc.
71 Progress Avenue
Cranberry Township, PA 16166

SERIES DORAL 3
OUTSWING ALUMINUM PATIO DOOR
(SMALL MISSILE)

REMARKS	DRWN	CHKD	DATE
ORIGINAL	MEH	FLB	01/21/04
2004 FBC	CL	FLB	09/06/05

04-113-001A

PAGE SCALE:
DESCRIPTION:

6

09/27/2005 - 2:48pm Andrel F:\01 Project Files\Traco\2004 Jobs\Traco Doral 3 Outswing Door Small Missile (04-113-001a)\04-113-001a Traco Doral 3 Outswing Door + Sidelites (Small Missile) rev0.3.dwg