MIAMI-DADE COUNTY
BUILDING CODE COMPLIANCE OFFICE (BCCO)
PRODUCT CONTROL DIVISION

MIAMI-DADE COUNTY, FLORIDA
METRO-DADE FLAGLER BUILDING

140 WEST FLAGLER STREET, SUITE 1603
MIAMI, FLORIDA 33130-1563
(305) 375-2901 FAX (305) 375-2908
www.buildingcodeonline.com

NOTICE OF ACCEPTANCE (NOA)

Shutter Enterprises Group, Inc.
915 S. Dixie Highway East
Pompano Beach, FL 33060

SCOPE:
This NOA is being issued under the applicable rules and regulations governing the use of construction materials. The documentation submitted has been reviewed by Miami-Dade County Product Control Division and accepted by the Board of Rules and Appeals (BORA) to be used in Miami Dade County and other areas where allowed by the Authority Having Jurisdiction (AHJ).

This NOA shall not be valid after the expiration date stated below. The Miami-Dade County Product Control Division (In Miami Dade County) and/or the AHJ (in areas other than Miami Dade County) reserve the right to have this product or material tested for quality assurance purposes. If this product or material fails to perform in the accepted manner, the manufacturer will incur the expense of such testing and the AHJ may immediately revoke, modify, or suspend the use of such product or material within their jurisdiction. BORA reserves the right to revoke this acceptance, if it is determined by Miami-Dade County Product Control Division that this product or material fails to meet the requirements of the applicable building code.

This product is approved as described herein, and has been designed to comply with the High Velocity Hurricane Zone of the Florida Building Code.

DESCRIPTION: Extruded Aluminum Bahama Shutter

APPROVAL DOCUMENT: Drawing No. 96-100, titled " Notice of Acceptance Bahama Shutter Product Approval ", sheets 1 through 6 of 6, prepared by D. L. Fowler, P.E., signed and sealed by D. L. Fowler, P.E., dated September 16, 2005, bearing the Miami-Dade County Product Control Revision stamp with the Notice of Acceptance number and expiration date by the Miami-Dade County Product Control Division.

MISSILE IMPACT RATING: Large and Small Missile Impact

LABELING: Each unit shall bear a permanent label with the manufacturer's name or logo, city, state and the following statement: "Miami-Dade County Product Control Approved", unless otherwise noted herein.

RENEWAL of this NOA shall be considered after a renewal application has been filed and there has been no change in the applicable building code negatively affecting the performance of this product.

TERMINATION of this NOA will occur after the expiration date or if there has been a revision or change in the materials, use, and/or manufacture of the product or process. Misuse of this NOA as an endorsement of any product, for sales, advertising or any other purposes shall automatically terminate this NOA. Failure to comply with any section of this NOA shall be cause for termination and removal of NOA.

ADVERTISEMENT: The NOA number preceded by the words Miami-Dade County, Florida, and followed by the expiration date may be displayed in advertising literature. If any portion of the NOA is displayed, then it shall be done in its entirety.

INSPECTION: A copy of this entire NOA shall be provided to the user by the manufacturer or its distributors and shall be available for inspection at the job site at the request of the Building Official.

This NOA **revises NOA # 02-0426.06** and consists of this page 1, evidence submitted pages E-1, E-2 & E-3 as well as approval document mentioned above.

The submitted documentation was reviewed by **Helmy A. Makar, P.E.**

Helmy A. Makar
05/25/2006

PRODUCT CONTROL ACCEPTED

NOA No 05-1004.09
Expiration Date: 08/27/2006
Approval Date: 05/25/2006

Shutter Enterprises Group, Inc.

NOTICE OF ACCEPTANCE: EVIDENCE SUBMITTED

1. EVIDENCE SUBMITTED UNDER PREVIOUS APPROVAL # 97-0731.04

A. DRAWINGS

1. *Drawings prepared by Bernardo Shutter Corporation, titled "Bahama Shutter", Drawing No. 96-100, Sheets 1 to 6 of 6, dated 11/01/96 with latest revision on 07/15/98 signed and sealed by G. S. Sanders, P.E.*

B. TEST

1. *Test report on Large Missile Impact Test, Cyclic Load Test and Uniform Static Load Test "Aluminum Bahamas Shutter 0.063 in 6063 alloy T6" prepared by American Test Lab of South Florida, Report # 1007.01-96 dated 10/08/96, signed and sealed by G. B. Sullivan, PE.*

C. CALCULATIONS

1. *Design Calculations, Rational Analysis of Connections prepared by Jenkins and Charland, Inc. Consulting Engineers, pages 1 to 9 of 9, dated 06/18/97 signed and sealed by G. S. Sanders, PE.*
2. *Design Calculations, Rational Analysis of Strut and Connections prepared by Jenkins and Charland Inc. Consulting Engineers, pages 1 to 25 of 25, dated 0710/98, signed and sealed by G. S. Sanders PE.*

D. MATERIAL CERTIFICATION

1. *Tensile Test Results No. CTL # 832B, prepared by Certified Testing Laboratories., dated 10/23/96 signed and sealed by R. Patel, PE.*
2. *Material Certification by Tifton Aluminum Company Inc. dated 06/02/97 signed by L. H. Railey.*
3. *Material Certification issued by National Northeast, dated 06/17/97 04/23/96 signed by W. Boutin.*

E. STATEMENTS

1. *Letter of Non Financial Interest prepared by Jenkins & Charland Incorporated, dated 08/21/97 signed by G. S. Sanders, PE.*

2. EVIDENCE SUBMITTED UNDER PREVIOUS APPROVAL # 01-0905.07

A. DRAWINGS

1. *See NOA No. 97-0731.04.*

B. TEST

1. *See NOA No. 97-0731.04.*

Helmy A. Makar

Helmy A. Makar, P.E.
Product Control Examiner
NOA No 05-1004.09
Expiration Date: 08/27/2006
Approval Date: 05/25/2006

C. CALCULATIONS

1. *See NOA No. 97-0731.04.*

D. MATERIAL CERTIFICATION

1. *See NOA No. 97-0731.04.*

E. STATEMENTS

1. *See NOA No. 97-0731.04.*
2. *Statement form Manufacturer stating that the product has not changed since its original approval.*
3. *Statement from engineer stating he is still in the engineering business*

3. EVIDENCE SUBMITTED UNDER PREVIOUS APPROVAL # 02-0426.06

A. DRAWINGS

See NOA 01-0905.07

B. TESTS

See NOA 01-0905.07

C. CALCULATIONS

See NOA 01-0905.07

D. MATERIAL CERTIFICATIONS

See NOA 01-0905.07

E. STATEMENTS

See NOA 01-0905.07

F. OTHER

See NOA 01-0905.07

4. NEW EVIDENCE SUBMITTED

A. DRAWINGS

1. *Drawing No. 96-100, titled " Notice of Acceptance Bahama Shutter Product Approval ", sheets 1 through 6 of 6, prepared by D. L. Fowler, P.E., signed and sealed by D. L. Fowler, P.E., dated September 16, 2005.*

Helmy A. Makar, P.E.
Product Control Examiner
NOA No 05-1004.09
Expiration Date: 08/27/2006
Approval Date: 05/25/2006

NOTICE OF ACCEPTANCE: EVIDENCE SUBMITTED

B. TESTS

1. None.

C. CALCULATIONS

1. None.

D. QUALITY ASSURANCE

1. By Miami-Dade Building Code Compliance Office.

E. MATERIAL CERTIFICATIONS

1. None.

Helmy A. Makar, P.E.
Product Control Examiner
NOA No 05-1004.09
Expiration Date: 08/27/2006
Approval Date: 05/25/2006

SHUTTER ENTERPRISES GROUP INC.

POMPANO BEACH, FLORIDA 33060

BAHAMA SHUTTER

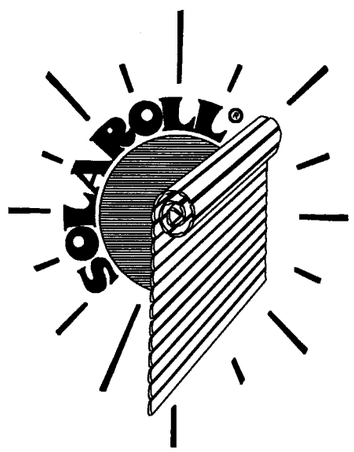

PRODUCT MARKING

A LABEL SHALL BE PLACED ON THE LOWER RIGHT CORNER, WITH THE FOLLOWING STATEMENT:

EXTRUDED ALUMINUM BAHAMA SHUTTER
DADE COUNTY PRODUCT CONTROL APPROVED
MANUFACTURED BY SHUTTER ENTERPRISES GROUP, INC.

GENERAL NOTES

1.0 SHUTTER SYSTEM WAS DESIGNED TO MEET THE REQUIREMENTS OF THE SOUTH FLORIDA BUILDING CODE, DADE COUNTY 1994 EDITION, AND HAS BEEN REDESIGNED TO MEET THE 2004 FLORIDA BUILDING CODE. NO ADDITIONAL 1/3 ALLOWABLE STRESS INCREASE WAS USED. PRODUCT FOR USE INSIDE AND OUTSIDE THE H.V.H.Z.

1.1 DESIGN WIND PRESSURES SHALL BE DERIVED USING THE AMERICAN SOCIETY OF CIVIL ENGINEERS STANDARD ASCE 7–98, AND FLORIDA BUILDING CODE 2004.

1.3 MAXIMUM DESIGN LOAD 80 PSF.

2.0 ALUMINUM COMPONENTS ARE DESIGNED IN ACCORDANCE WITH THE "ALUMINUM CONSTRUCTION MANUAL".

3.0 THE ALUMINUM ALLOYS USED TO DERIVE THESE DESIGN CHARTS ARE AS SHOWN IN THE DRAWINGS.

4.0 STEEL SURFACES IN CONTACT WITH ALUMINUM COMPONENTS SHALL BE GALVANIZED OR HAVE ONE COAT OF ZINC CHROMATE PRIMER IN ACCORDANCE WITH FEDERAL SPEC TTP–645.

5.0 THE EMBEDMENT FOR ANCHORS SHOWN IN THESE DRAWINGS IS THE REQUIRED MINIMUM PENETRATION INTO THE BASE MATERIAL OF THE SUPPORTING STRUCTURE. MINIMUM EDGE DISTANCE (3 1/2") SHOWN IN THESE DRAWINGS INCLUDE A 1/2" ALLOWANCE FOR STUCCO.

6.0 BOLTS, NUTS AND WASHERS SHALL BE STAINLESS STEEL OR ALUMINUM ALLOY 2024–T4 OR 7075–T6 OR PLATED STEEL.

7.0 DEFLECTION DESIGN CRITERIA.

7.1 MULLIONS HAVE BEEN SIZED TO LIMIT THE DEFLECTION OF THE ELEMENTS TO $\leq$ L/180 AT THE DESIGN LOAD.

7.2 SLATS HAVE BEEN SIZED TO LIMIT THE DEFLECTION AT THE DESIGN LOAD TO BE $\leq$ L/30 FOR SUCTION AND THE LESSER OF L/30 OR 2 INCHES WHEN SUBJECTED TO POSITIVE PRESSURE.

7.3 SHUTTERS SHALL BE CONFIGURED TO HAVE NO LESS THAN 2 15/16 INCHES MINIMUM CLEARANCE BETWEEN THE UNLOADED SLAT SLAT AND GLAZING FOR A MAXIMUM DESIGN LOAD OR 80 PSF.

8.0 ALTERATIONS OR ADDITIONS TO THIS DRAWING ARE NOT PERMITTED. DOCUMENT SHALL BEAR THE ORIGINAL SIGNATURE, SEAL, AND DATE OF THE PROFESSIONAL ENGINEER LISTED.

9.0 THIS PRODUCT APPROVAL IS SUITABLE FOR USE ONLY AS SPECIFICALLY STATED ON THE COMBINED PAGES OF THE ENTIRE DOCUMENT. ANY DEVIATIONS SHALL BE REVIEWED AND APPROVED SEPARATELY.

PRODUCT REVISED
as complying with the Florida Building Code
Acceptance No. 05-1004.09
Expiration Date 08/27/2006
By Helmy A. Mek
Miami Dade Product Control Division

TABLE OF CONTENTS

PAGE NO.	DESCRIPTION
1	GENERAL NOTES, TABLE OF CONTENTS
2	BAHAMA TYPICAL SECTIONS
3	BAHAMA TYPICAL SECTIONS
4	BAHAMA ELEVATIONS & PLAN VIEW
5	BAHAMA PANEL ASSEMBLY
6	BAHAMA COMPONENTS

SHUTTER ENTERPRISES GROUP INC.
915 SOUTH DIXIE HIGHWAY
POMPANO BEACH, FL 33060

COPYRIGHT © 2005

DRAWING TITLE:
NOTICE OF ACCEPTANCE
BAHAMA SHUTTER
PRODUCT APPROVAL

D.L. Fowler
Professional Engineer
Florida License No.
PE0050458

9-22-05

DRAWN:	P4
DATE:	8-13-05
APPROVED:	DF
DATE:	9-16-05
DRAWING NO:	96-100
SIZE: B	REV: A
SCALE:	NA
SHEET:	1 OF 6

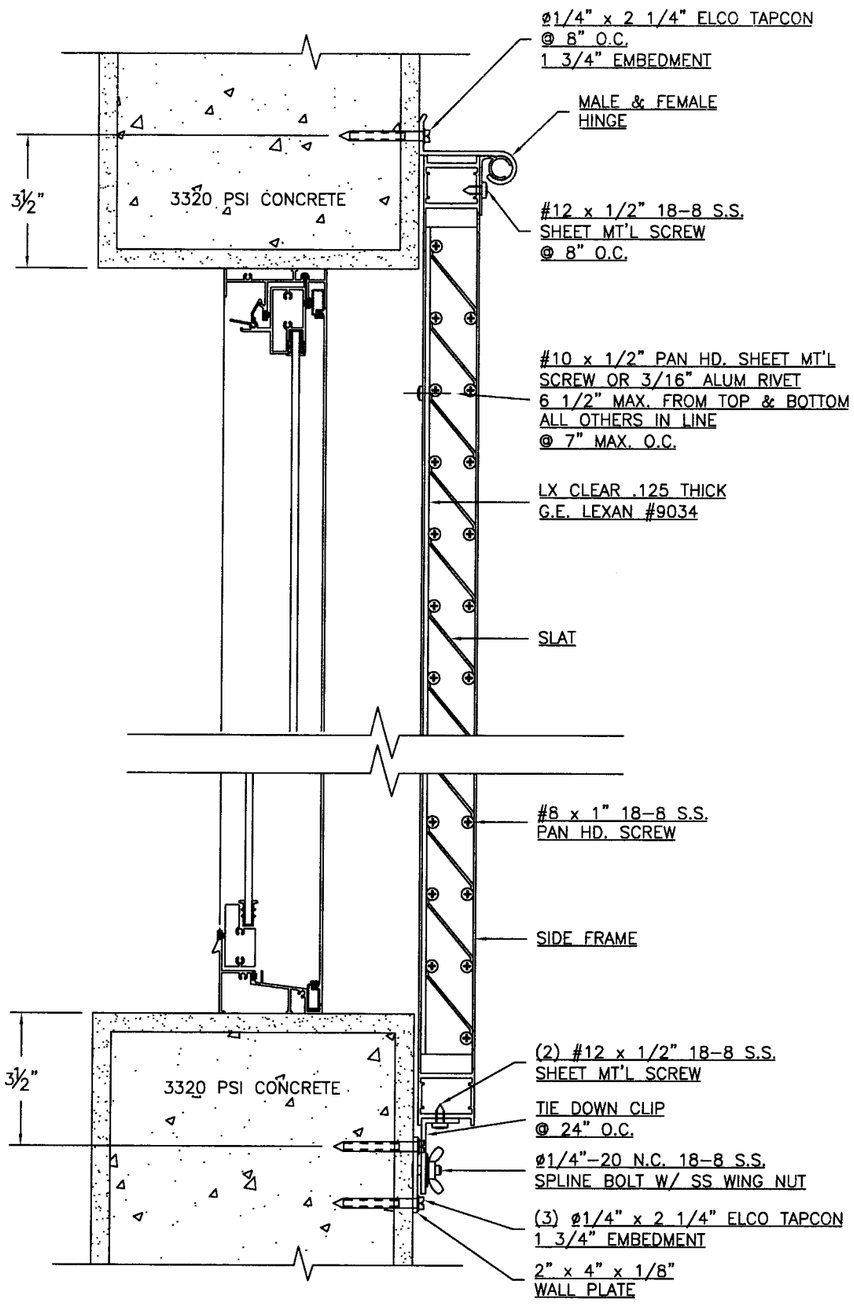

CONCRETE WALL MOUNT SECTION A1

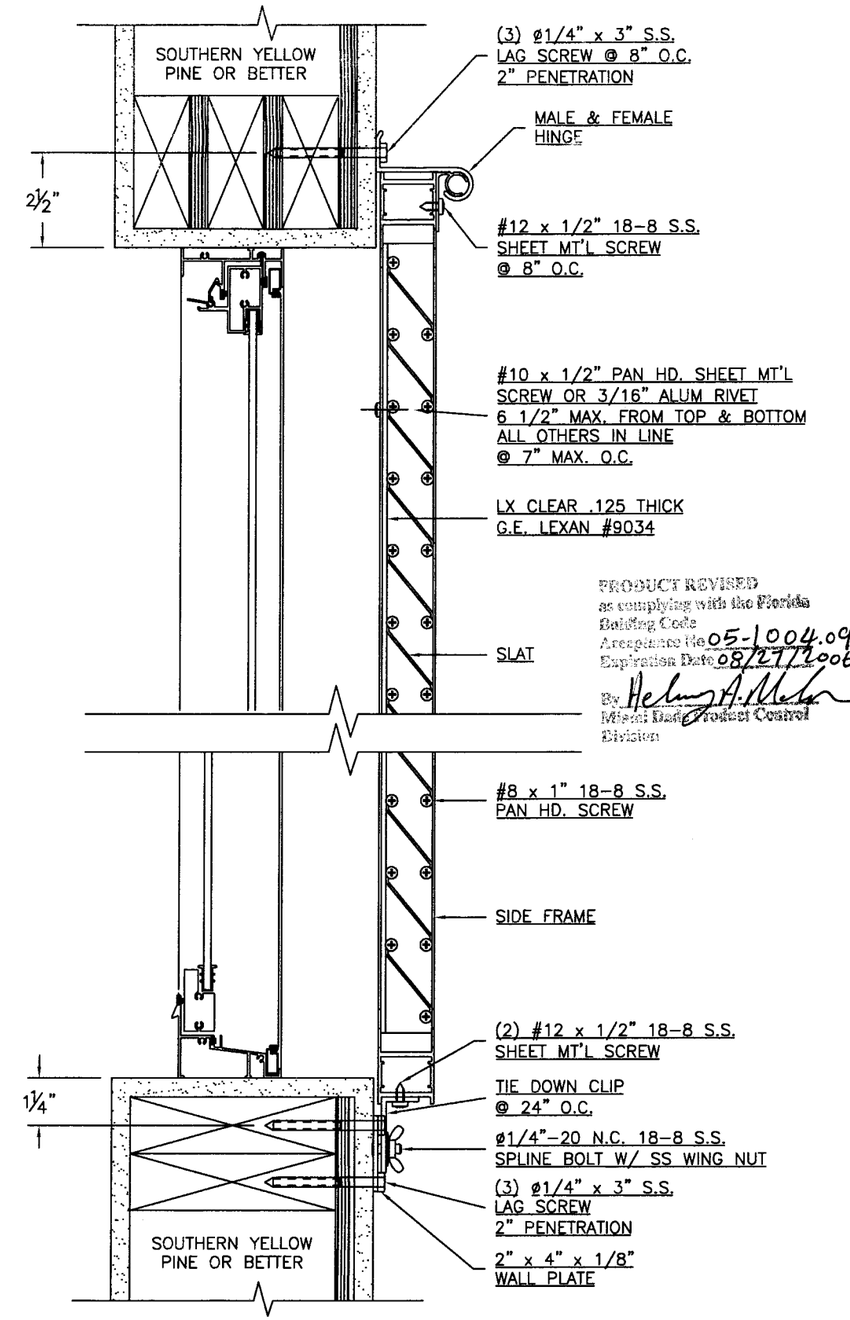

WOOD WALL MOUNT SECTION A2

PRODUCT REVISED
as complying with the Florida
Building Code
Acceptance No 05-1004.09
Expiration Date 08/27/2006
By [signature]
Miami Dade Product Control
Division

SHUTTER ENTERPRISES
GROUP INC.

915 SOUTH DIXIE HIGHWAY
POMPANO BEACH, FL 33060
COPYRIGHT © 2005

DRAWING TITLE:

NOTICE OF ACCEPTANCE
BAHAMA SHUTTER
PRODUCT APPROVAL

D.L. Fowler
Professional Engineer
Florida License No.
PE0050458
[signature] 9-22-05

DRAWN:	P4
DATE:	8-13-05
APPROVED:	DF
DATE:	9-16-05
DRAWING NO:	96-100
SIZE: B	REV: A
SCALE:	1 : 4
SHEET:	2 OF 6

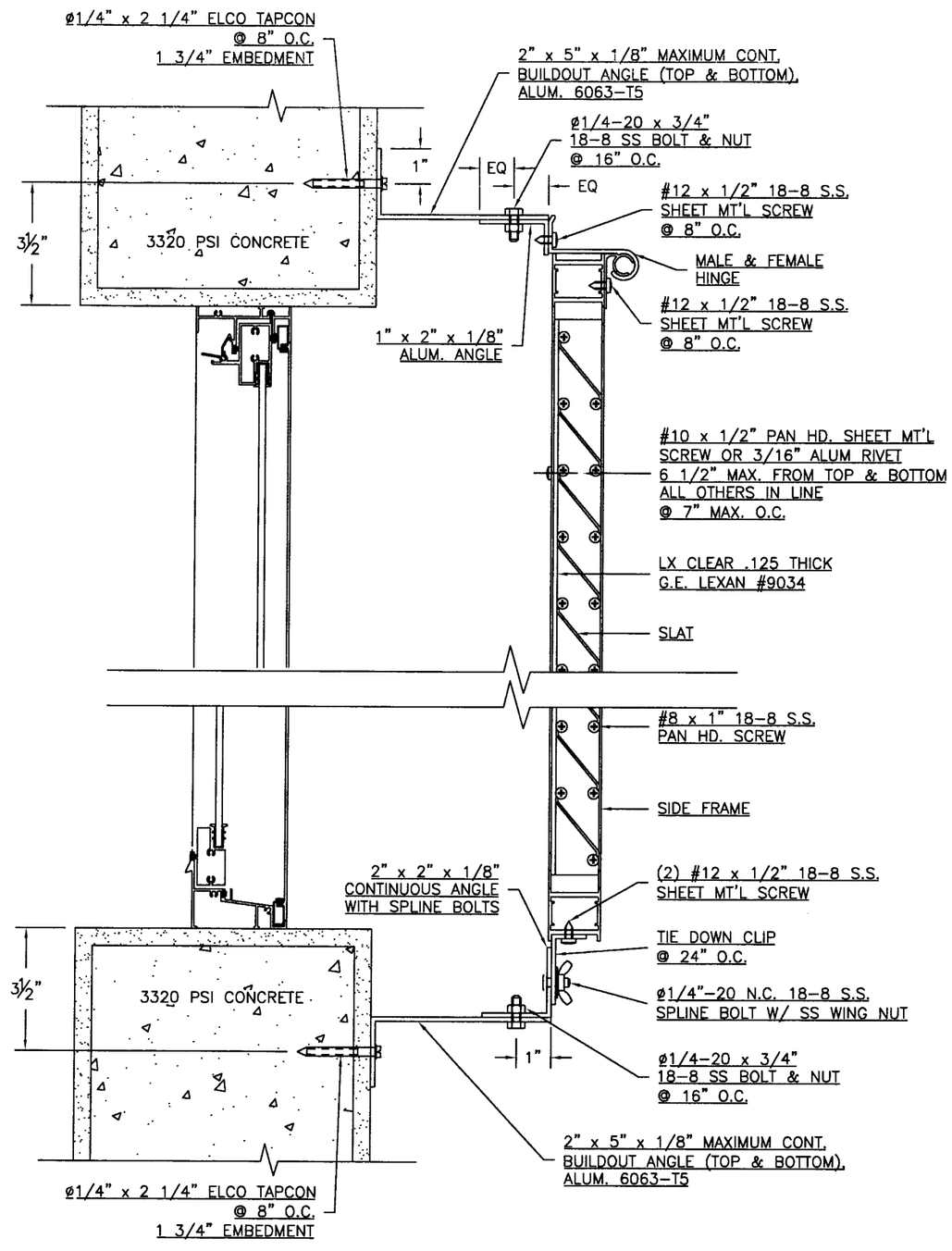

REVERSED BUILDOUT SECTION A3 *

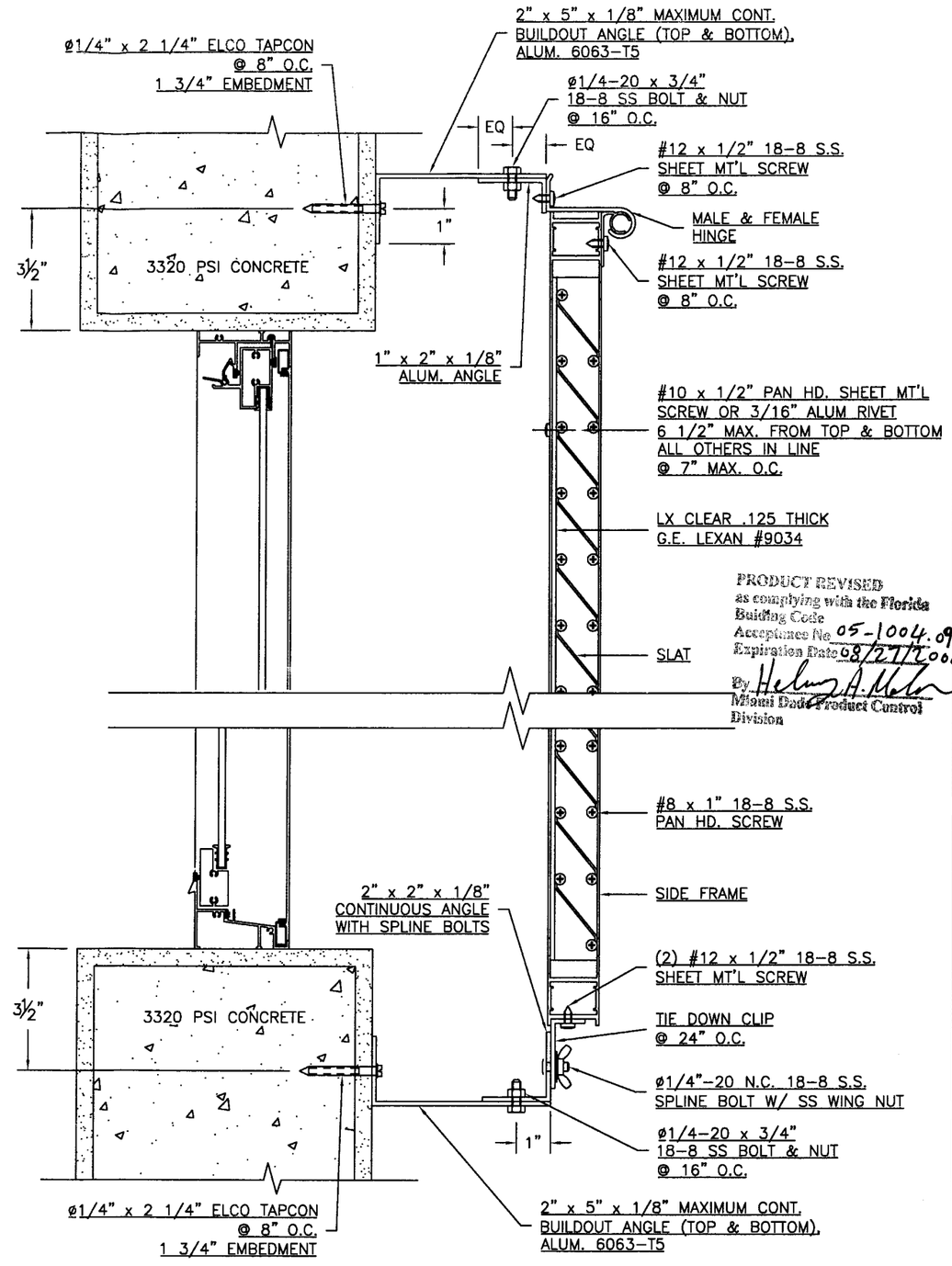

PRODUCT REVISED
as complying with the Florida
Building Code
Acceptance No. 05-1004.09
Expiration Date 08/27/2006
By Helena A. Melo
Miami Dade Product Control
Division

TYPICAL BUILDOUT SECTION A4 *

* VERTICAL BUILDOUT ANGLES REQUIRED ON BOTH SIDES TO MATCH TOP & BOTTOM BUILDOUT ANGLE WITH ø1/4" x 2 1/4" ELCO TAPCON @ 18" O.C IN THE 2" LEG OR ø1/4" CAULK-IN FOR REMOVABLE INSTALLATIONS.

SHUTTER ENTERPRISES
GROUP INC.
915 SOUTH DIXIE HIGHWAY
POMPANO BEACH, FL 33060

COPYRIGHT © 2005

DRAWING TITLE:

NOTICE OF ACCEPTANCE
BAHAMA SHUTTER
PRODUCT APPROVAL

D.L. Fowler
Professional Engineer
Florida License No.
PE0050458

50-22 9

DRAWN:	PA
DATE:	8-13-05
APPROVED:	DF
DATE:	9-16-05
DRAWING NO:	96-100
SIZE: B	REV: A
SCALE:	1 : 4
SHEET:	3 OF 6

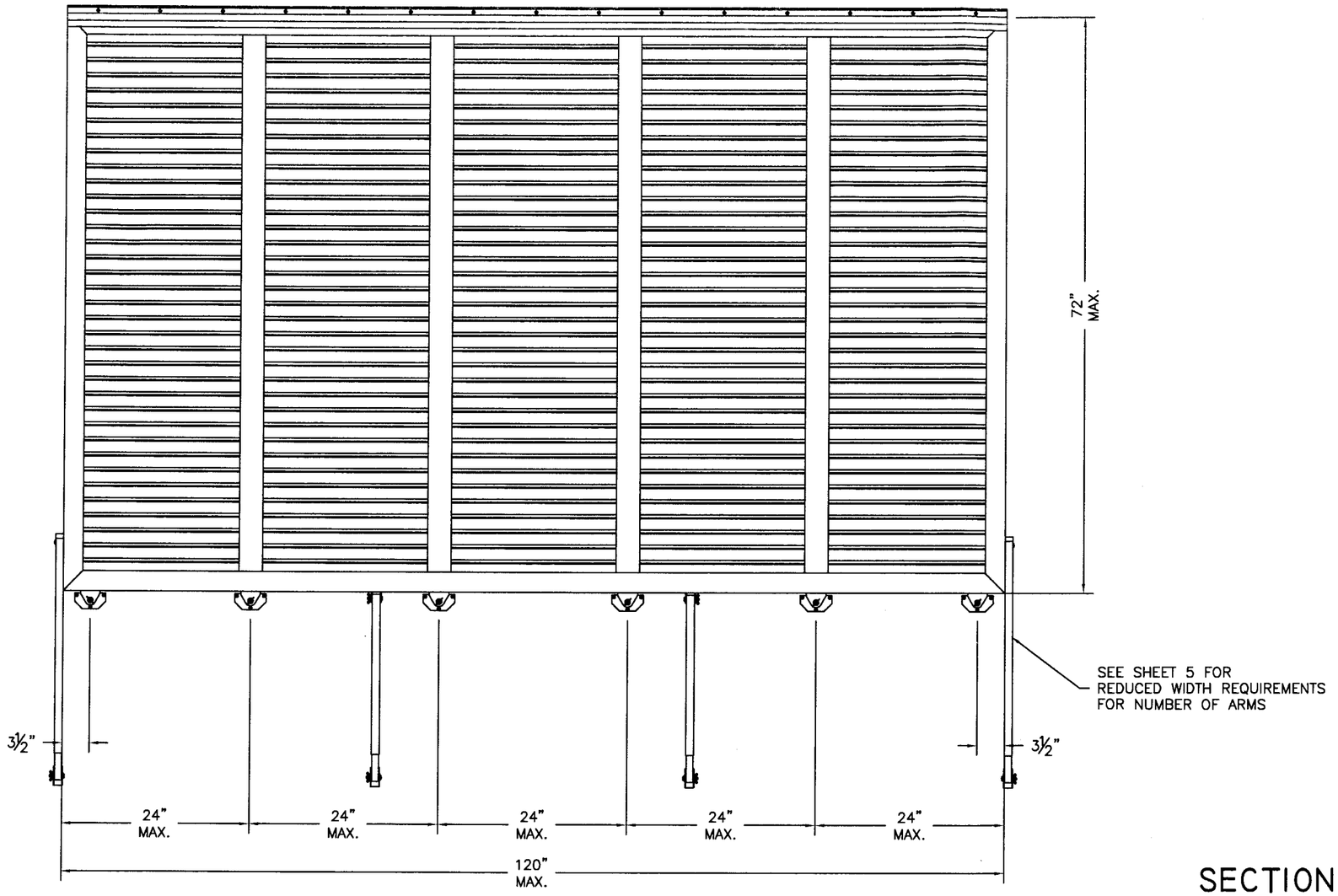

ELEVATION

SECTION VIEW

SCALE: 1:4

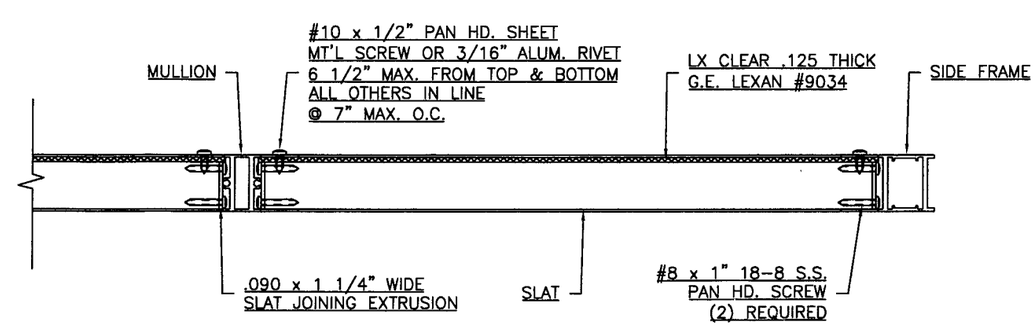

PRODUCT REVISED
as complying with the Florida
Building Code
Acceptance No. 05-100A.09
Expiration Date 08/27/2006
By Helmy A. Mele
Miami Dade Product Control
Division

SHUTTER ENTERPRISES GROUP INC.
915 SOUTH DIXIE HIGHWAY
POMPANO BEACH, FL 33060
COPYRIGHT © 2005

DRAWING TITLE:
NOTICE OF ACCEPTANCE
BAHAMA SHUTTER
PRODUCT APPROVAL

D.L. Fowler
Professional Engineer
Florida License No.
PE0050458
9-22-05

DRAWN:	P4
DATE:	8-15-05
APPROVED:	DF
DATE:	09-20-05
DRAWING NO:	96-100
SIZE: B	REV: A
SCALE:	3/4" = 1'-0", U.O.N.
SHEET:	4 OF 6

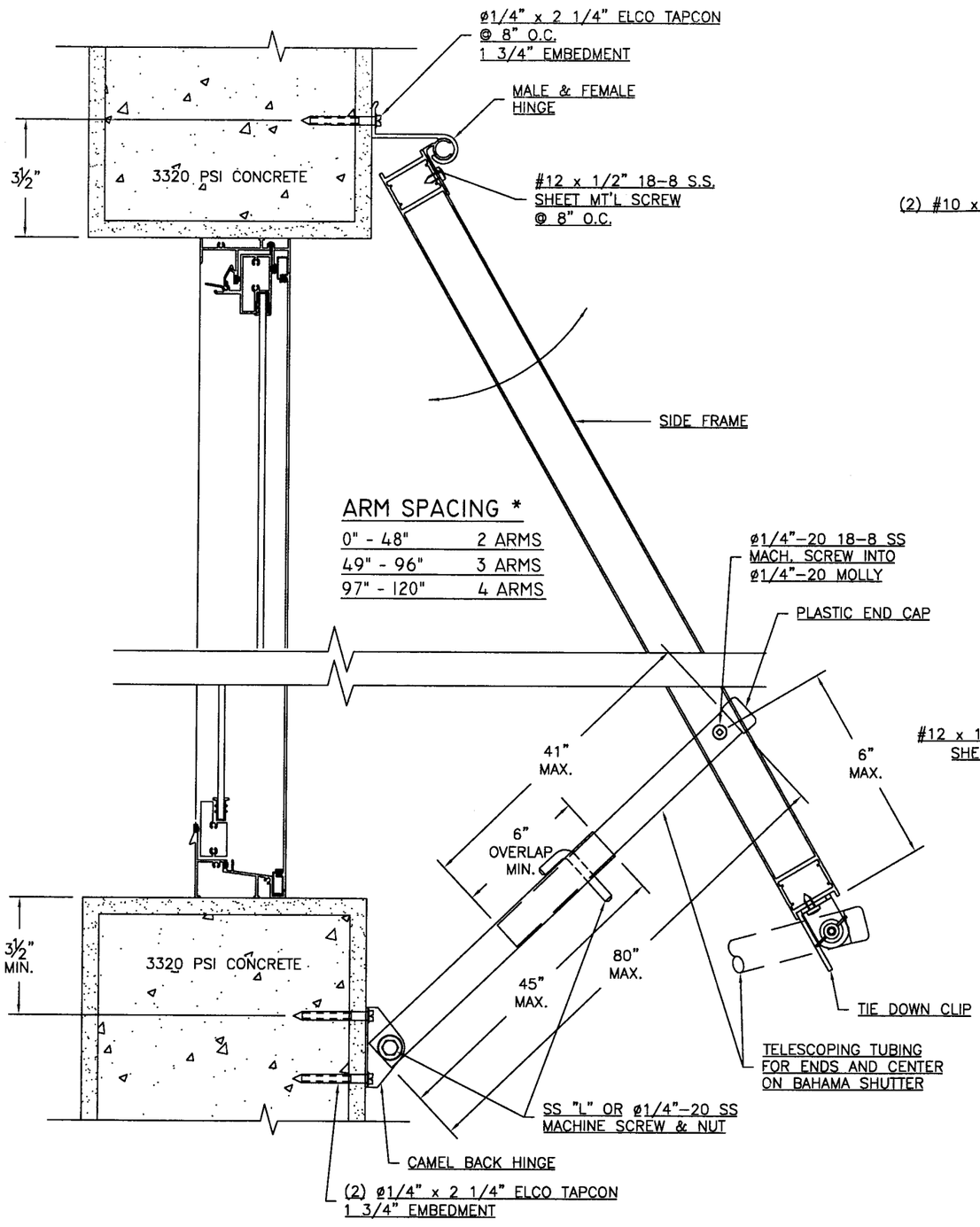

SILL - PARTIALLY OPEN VIEW A5

ARM SPACING *	
0" - 48"	2 ARMS
49" - 96"	3 ARMS
97" - 120"	4 ARMS

* 3RD & 4TH ARMS TO BE MOUNTED 10" MIN. FROM EITHER VERITCAL END

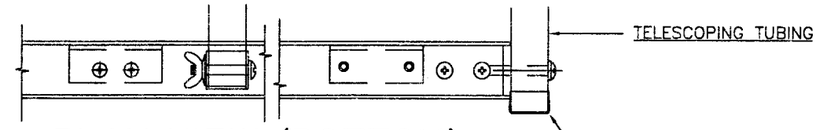

PLAN VIEW (BOTTOM)

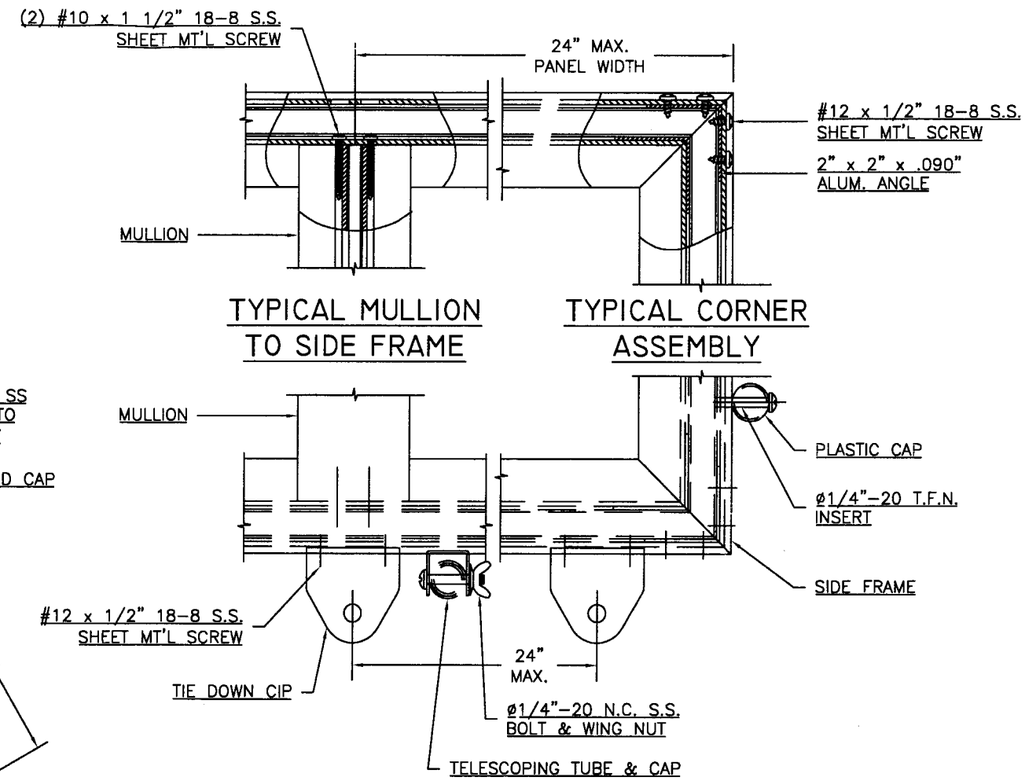

TYPICAL MULLION TO SIDE FRAME

TYPICAL CORNER ASSEMBLY

PANEL ASSEMBLY

PRODUCT REVISED
as complying with the Florida
Building Code
Acceptance No 05-1004.09
Expiration Date 08/27/2006
By Helena A. Melo
Miami Dade Product Control
Division

SHUTTER ENTERPRISES GROUP INC.
915 SOUTH DIXIE HIGHWAY
POMPANO BEACH, FL 33060
COPYRIGHT © 2005

DRAWING TITLE:
NOTICE OF ACCEPTANCE
BAHAMA SHUTTER
PRODUCT APPROVAL

D.L. Fowler
Professional Engineer
Florida License No.
PE0050458
9-22-05

DRAWN:	P4
DATE:	8-13-05
APPROVED:	DF
DATE:	9-20-05
DRAWING NO:	96-100
SIZE: B	REV: A
SCALE:	1 : 4
SHEET:	5 OF 6

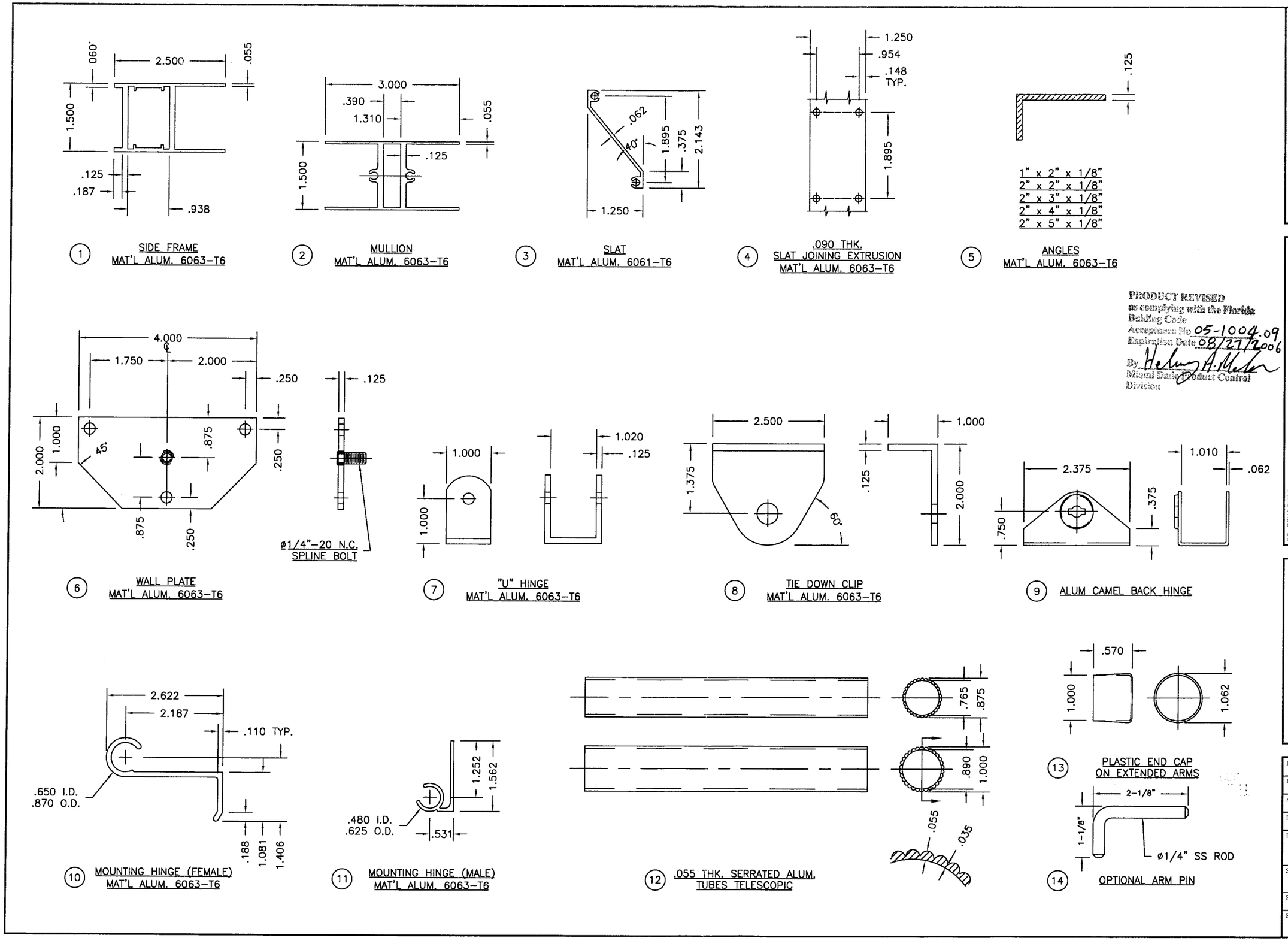

PRODUCT REVISED
as complying with the Florida Building Code
Acceptance No 05-1004.09
Expiration Date 08/27/2006
By Helmy A. Mesler
Miami Dade Product Control Division

SHUTTER ENTERPRISES GROUP INC.
915 SOUTH DIXIE HIGHWAY
POMPANO BEACH, FL 33060
COPYRIGHT © 2005

DRAWING TITLE:
NOTICE OF ACCEPTANCE
BAHAMA SHUTTER
PRODUCT APPROVAL

D.L. Fowler
Professional Engineer
Florida License No.
PE0050458
9-22-05

DRAWN:	P4
DATE:	8-13-05
APPROVED:	DF
DATE:	09-20-05
DRAWING NO:	96-100
SIZE: B	REV: A
SCALE:	1 : 2
SHEET:	6 OF 6