MIAMI-DADE COUNTY

BUILDING CODE COMPLIANCE OFFICE (BCCO)
PRODUCT CONTROL DIVISION

MIAMI-DADE COUNTY, FLORIDA
METRO-DADE FLAGLER BUILDING
140 WEST FLAGLER STREET, SUITE 1603
MIAMI, FLORIDA 33130-1563
(305) 375-2901 FAX (305) 375-2908
www.buldingcodeonline.com

NOTICE OF ACCEPTANCE (NOA)

Euroll Service BV
Patroonsweg 5
NL 3892DA, Zeewolde, Netherlands

SCOPE:
This NOA is being issued under the applicable rules and regulations governing the use of construction materials. The documentation submitted has been reviewed by Miami-Dade County Product Control Division and accepted by the Board of Rules and Appeals (BORA) to be used in Miami Dade County and other areas where allowed by the Authority Having Jurisdiction (AHJ).
This NOA shall not be valid after the expiration date stated below. The Miami-Dade County Product Control Division (In Miami Dade County) and/or the AHJ (in areas other than Miami Dade County) reserve the right to have this product or material tested for quality assurance purposes. If this product or material fails to perform in the accepted manner, the manufacturer will incur the expense of such testing and the AHJ may immediately revoke, modify, or suspend the use of such product or material within their jurisdiction. BORA reserves the right to revoke this acceptance, if it is determined by Miami-Dade County Product Control Division that this product or material fails to meet the requirements of the applicable building code.
This product is approved as described herein, and has been designed to comply with the Florida Building Code, including the High Velocity Hurricane Zone.

DESCRIPTION: EUSEC 2004 Roll-Up Shutter

APPROVAL DOCUMENT: Drawing No. 05-015, titled "EUSEC 2004 Roll-Up Shutter", sheets 1 through 13 of 13, dated 01/20/05 with revision 1 dated 07/28/06, prepared by Tilteco Inc, signed and sealed by Walter A. Tillit, P.E., bearing the Miami-Dade County Product Control Approval stamp with the Notice of Acceptance number and approval date by the Miami-Dade County Product Control Division.

MISSILE IMPACT RATING: Large and Small Missile Impact

LABELING: Each unit shall bear a permanent label with the manufacturer's name or logo, city, state and following statement: "Miami-Dade County Product Control Approved", unless otherwise noted herein.

RENEWAL of this NOA shall be considered after a renewal application has been filed and there has been no change in the applicable building code negatively affecting the performance of this product.

TERMINATION of this NOA will occur after the expiration date or if there has been a revision or change in the materials, use, and/or manufacture of the product or process. Misuse of this NOA as an endorsement of any product, for sales, advertising or any other purposes shall automatically terminate this NOA. Failure to comply with any section of this NOA shall be cause for termination and removal of NOA.

ADVERTISEMENT: The NOA number preceded by the words Miami-Dade County, Florida, and followed by the expiration date may be displayed in advertising literature. If any portion of the NOA is displayed, then it shall be done in its entirety.

INSPECTION: A copy of this entire NOA shall be provided to the user by the manufacturer or its distributors and shall be available for inspection at the job site at the request of the Building Official.
This NOA consists of this page 1, evidence page E-1 and E-2 , as well as approval document mentioned above.
The submitted documentation was reviewed by **Jaime D. Gascon, P.E.**

PRODUCT CONTROL ACCEPTED

J. Gascon
12/18/06

Euroll Service BV

NOTICE OF ACCEPTANCE: EVIDENCE SUBMITTED

A. DRAWINGS

1. Manufacturer's die drawings and sections.
2. Drawing No 05-015, Sheets 1 through 13 of 13, titled "EUSEC 2004 Roll-Up Shutter", dated 01/20/05 with revision 1 dated 07/28/06, prepared by Tilteco Inc., signed and sealed by Walter A. Tillit, P.E.

B. TEST

1. Test report on Large Missile Impact Test per TAS 201, Cyclic Wind Pressure Test per TAS 203 and Uniform Static Air Pressure Test per TAS 202, of "EUSEC 2004 Aluminum Roll Up Shutter", prepared by Fenestration Testing Laboratory, Inc., Report No. **FTL 4631**, dated 07/18/2005, signed and sealed by Edmundo J. Largaespada, PE.
2. Test report on Large Missile Impact Test per TAS 201, Cyclic Wind Pressure Test per TAS 203 and Uniform Static Air Pressure Test per TAS 202, of "EUSEC 2004 Aluminum Roll Up Shutter", prepared by Fenestration Testing Laboratory, Inc., Report No. **FTL 4635**, dated 07/25/2005, signed and sealed by Edmundo J. Largaespada, PE.
3. Test report on Large Missile Impact Test per TAS 201, Cyclic Wind Pressure Test per TAS 203 and Uniform Static Air Pressure Test per TAS 202, of "EUSEC 2004 Aluminum Roll Up Shutter", prepared by Fenestration Testing Laboratory, Inc., Report No. **FTL 4626**, dated 07/18/2005, signed and sealed by Edmundo J. Largaespada, PE.
4. Test report on Large Missile Impact Test per TAS 201of "Aluminum Storm Bar", prepared by Fenestration Testing Laboratory, Inc., Report **FTL 4632**, dated 07/25/2005, signed and sealed by Edmundo J. Largaespada, PE.
5. Test report on Large Missile Impact Test per TAS 201of "Aluminum Header Box", prepared by Fenestration Testing Laboratory, Inc., Report **FTL 4638**, dated 07/18/2005, signed and sealed by Edmundo J. Largaespada, PE.

C. CALCULATIONS

1. Comparative analysis for slats; storm bars, headers and anchors dated 01/20/05, pages 1 through 97 of 97, prepared by Tilteco Inc., signed and sealed by W. A. Tillit Jr., PE.

D. QUALITY ASSURANCE

1. Miami Dade Building Code Compliance Office (BCCO).

E. MATERIAL CERTIFICATION

1. Notice of Acceptance No. **03-0924.01** issued to General Electric for "Polycarbonate Plastic Sheets" for Lexan, dated 11/13/03, expiring on 07/17/08.
2. Tensile and Physical Properties for aluminum parts tested per Report No. 12937, for 6063-T6, prepared by Alcoa Architectuursystemen, dated 10/05/05.

Jaime D. Gascon, P.E.
Chief, Product Control Division
NOA No 05-1005.01
Expiration Date: January 11, 2012
Approval Date: January 11, 2007

NOTICE OF ACCEPTANCE: EVIDENCE SUBMITTED

F. STATEMENTS

1. Statement letter of conformance, dated 08/16/05, signed and sealed by Walter A. Tillit, P.E.
2. No-financial interest letter issued by Tilteco, Inc., on 08/16/05, signed and sealed by Walter A.Tillit Jr., PE.
3. Test compliance letter issued by Fenestration Testing Laboratory, Inc., on 08/19/05, signed and sealed by Edmundo J. Largaespada, PE.

G. OTHER

1. Distributor Agreement between Euroll Service B.V. and FERMSAM International, for the EUSEC 2004 Shutter System, signed and notarized, filed 09/19/06.

Jaime D. Gascon, P.E.
Chief, Product Control Division
NOA No 05-1005.01
Expiration Date: January 11, 2012
Approval Date: January 11, 2007

GENERAL NOTES:

1. ROLL–UP SHUTTER SHOWN ON THIS PRODUCT APPROVAL DOCUMENT (P. A. D.) HAS BEEN VERIFIED FOR CODE COMPLIANCE IN ACCORDANCE WITH THE 2004 EDITION OF THE FLORIDA BUILDING CODE.
DESIGN WIND LOADS SHALL BE DETERMINED AS PER SECTION 1620 OF THE ABOVE MENTIONED CODE.
IN ORDER TO VERIFY THAT COMPONENTS AND ANCHORS ON THIS P.A.D. AS TESTED WERE NOT OVER STRESSED, A 33% INCREASE IN ALLOWABLE STRESS FOR WIND LOADS WAS NOT USED IN THEIR ANALYSIS. A DURATION FACTOR CD=1.60 WAS USED FOR VERIFICATION OF FASTENERS IN WOOD.
ROLL–UP SHUTTER'S ADEQUACY FOR IMPACT AND FATIGUE RESISTANCE HAS BEEN VERIFIED IN ACCORDANCE WITH SECTION 1609.1.4 OF THE ABOVE MENTIONED CODE AS PER FENESTRATION TESTING LAB REPORTS # 4635, 4626, 4638, 4631, 4632 PER TAS 201, 202 AND 203 PROTOCOLS.

2. ALL ALUMINUM EXTRUSIONS SHALL BE MADE OF ALLOYS AND TEMPERS, AS INDICATED ON SHEET 3 OF THIS DRAWING. THE THICKNESS OF ALL EXTRUSIONS SHALL BE AS SHOWN ON THIS DRAWING WITH STANDARD TOLERANCES IN ACCORDANCE WITH THE ALUMINUM STANDARDS AND DATA 2003 EDITION". ALUMINUM ASSOCIATION INCORPORATED, WASHINGTON D.C.

3. LEXAN® SHEET AT SLATS SHALL BE TYPE 9030 SHEET AS MANUFACTURED BY GENERAL ELECTRIC PLASTICS, WITH MIAMI–DADE COUNTY PRODUCT APPROVAL # 03–0924.01.

4. ALL SCREWS TO BE STAINLESS STEEL 304 OR 316 SERIES WITH 50 ksi YIELD STRENGTH AND 90 ksi TENSILE STRENGTH OR CORROSION RESISTANT COATED CARBON STEEL AS PER DIN 50018.

5. BOLTS TO BE A.S.T.M. A–307, GALVANIZED OR AISI 304 SERIES STAINLESS STEEL WITH 36 ksi MINIMUM YIELD STRENGTH.

6. STORM BARS AT FLOOR OR CEILING MOUNTING INSTALLATIONS MAY BE REMOVABLE AT NON HURRICANE CONDITIONS. HOWEVER, EACH STORM BAR SHALL BEAR A PERMANENT LABEL IN A VISIBLE PLACE WITH A WARNING NOTE INSTRUCTING THE TENANT OR OWNER THAT STORM BARS MUST BE INSTALLED WITH CORRESPONDING HARDWARE DURING PERIODS OF HURRICANE WARNING AND THAT ROLL UP SHUTTERS WILL NOT OFFER HURRICANE PROTECTION UNLESS ALL STORM BARS ARE INSTALLED AS DIRECTED.

7. REMOVABLE STORM BARS SHALL BE STORED IN A CONSPICUOUS PLACE WITH EASY AND IMMEDIATE ACCESS SO THAT THEY CAN BE REACHED AND INSTALLED ANY TIME (HURRICANE CONDITIONS OR NOT) SLATS ARE ROLLED DOWN. THE EFFECT OF THE SLATS ROLLED DOWN WITHOUT STORM BARS IS; THOSE SLATS WILL SLIP OUT OF TRACK DUE TO THE DEFLECTION CAUSED BY WIND FORCES.

8. ANCHORS TO WALL FOR SIDE RAILS AND BOX CONNECTION SHALL BE AS FOLLOWS:
(A) TO EXISTING POURED CONCRETE : MIN. 3320 p.s.i. COMPRESSIVE STRENGTH.
–1/4" ø TAPCON ANCHORS AS MANUFACTURED BY ELCO TEXTRON.

NOTES:
A.1) MINIMUM EMBEDMENT OF TAPCON ANCHORS INTO POURED CONCRETE SHALL BE 1 3/4", NO EMBEDMENT INTO STUCCO SHALL BE CONSIDERED AS PART OF THE REQUIRED EMBEDMENT.

A.2) IN CASE THAT PRECAST STONE, PRECAST CONCRETE PANELS, OR PAVERS BE FOUND ON THE EXISTING WALL OR FLOOR, ANCHORS SHALL BE LONG ENOUGH TO REACH THE MAIN STRUCTURE BEHIND SUCH PANELS.

(B) TO EXISTING CONCRETE BLOCK WALL:
–1/4" ø TAPCON ANCHORS, AS MANUFACTURED BY ELCO TEXTRON.

NOTES:
B.1) MINIMUM EMBEDMENT OF TAPCON ANCHORS, INTO THE CONCRETE BLOCK UNIT SHALL BE 1 1/4".

B.2) IN CASE THAT PRECAST STONE OR PRECAST CONCRETE PANELS BE FOUND ON THE EXISTING WALL, ANCHORS SHALL BE LONG ENOUGH TO REACH THE MAIN STRUCTURE BEHIND SUCH PANELS.

(C) TO EXISTING WOOD FRAME BUILDING:
–1/4" ø TAPCON ANCHORS, AS MANUFACTURED BY ELCO TEXTRON.

NOTES:
C.1) MINIMUM EMBEDMENT OF TAPCON ANCHORS, INTO THE WOOD FRAME UNIT SHALL BE 1 1/2" THREADED PENETRATION.

C.2) IN CASE THAT PRECAST STONE OR PRECAST CONCRETE PANELS BE FOUND ON THE EXISTING WALL, ANCHORS SHALL BE LONG ENOUGH TO REACH THE MAIN STRUCTURE BEHIND SUCH PANELS.

9. IT SHALL BE THE RESPONSIBILITY OF THE CONTRACTOR TO VERIFY THE SOUNDNESS OF THE STRUCTURE WHERE SHUTTER IS TO BE ATTACHED TO INSURE PROPER ANCHORAGE.

10. ROLL–UP MECHANISM NOT PART OF THIS APPROVAL, BUT SHALL BE CERTIFIED BY AN INDEPENDENT TESTING AGENCY.

11.(a) THIS P.A.D. PREPARED BY THIS ENGINEER IS GENERIC AND DOES NOT PROVIDE INFORMATION FOR A SITE SPECIFIC PROJECT; i.e. WHERE THE SITE CONDITIONS DEVIATE FROM THE P.A.D.

(b) CONTRACTOR TO BE RESPONSIBLE FOR THE SELECTION, PURCHASE AND INSTALLATION INCLUDING LIFE SAFETY OF THIS PRODUCT, BASED ON THIS P.A.D. PROVIDED HE/SHE DOES NOT DEVIATE FROM THE CONDITIONS DETAILED ON THIS DOCUMENT. CONSTRUCTION SAFETY AT SITE IS THE CONTRACTOR'S RESPONSIBILITY.

(c) THIS P.A.D. WILL BE CONSIDERED INVALID IF ALTERED BY ANY MEANS.

(d) SITE SPECIFIC PROJECTS SHALL BE PREPARED BY A FLORIDA REGISTERED ENGINEER OR ARCHITECT WHICH WILL BECOME THE ENGINEER OF RECORD (E.O.R.) FOR THE PROJECT AND WHO WILL BE RESPONSIBLE FOR THE PROPER USE OF THE P.A.D.

(e) THIS P.A.D. SHALL COMPLY WITH SECTION 2:61G15 OF THE FLORIDA ADMINISTRATIVE CODE.

12. SHUTTER MANUFACTURER'S LABEL SHALL BE PLACED ON THE EXPOSED SURFACE OF THE SIDE RAIL APPROXIMATELY 4" ABOVE THE BOTTOM OF SUCH RAIL. LABEL SHALL READ AS FOLLOWS:
EUROLL SERVICE BV.
PATRONSWEG 5 3892 DA ZEEWOLDE, NETHERLANDS
MIAMI–DADE COUNTY PRODUCT CONTROL APPROVED.

Approved as complying with the Florida Building Code
Date JANUARY 11 2007
NOA# 05-1005.01
Miami Dade Product Control Division
By

F.B.C. (High Velocity Hurricane Zone)

NOV 17 2006
P.E. SEAL/SIGNATURE/DATE

© 2005 TILTECO INC.

TILTECO INC.
TILLIT TESTING & ENGINEERING COMPANY
6355 N.W. 36th. St., Ste. 305, VIRGINIA GARDENS, Fl. 33166
Phone : (305)871-1530 . Fax : (305)871-1531
e-mail: tilteco@aol.com
EB-0006719
WALTER A. TILLIT Jr. P. E.
FLORIDA Lic. # 44167

EUSEC 2004 ROLL-UP SHUTTER

EUROLL SERVICE BV
PATRONSWEG 5
3892 DA ZEEWOLDE, NETHERLANDS

REV. No	DESCRIPTION	DATE	REV. No	DESCRIPTION	DATE
1	GENERAL	7/28/06	3		
2			4		

DRAWN BY S.M.
1/20/05 DATE
05-015 DRAWING No
SHEET 1 OF 13

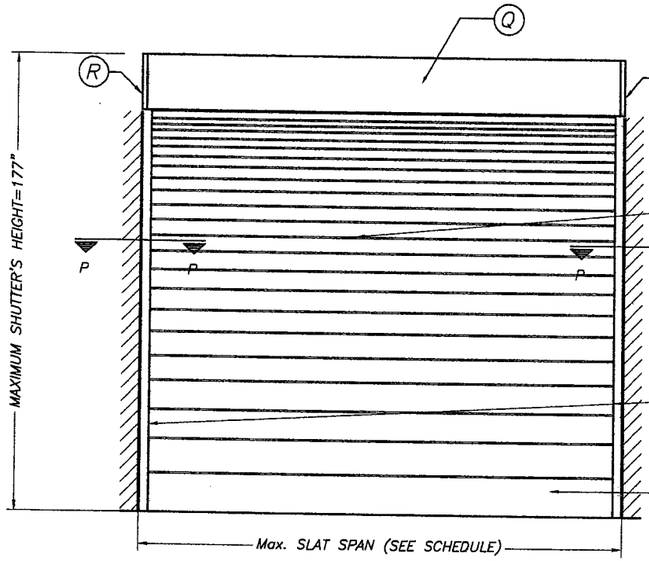

TYPICAL SINGLE UNIT ELEVATION (NO STORM BARS REQUIRED)

NOTE: SEE SHEET 3 & 4 OF 13 FOR COMPONENTS NOMENCLATURE.

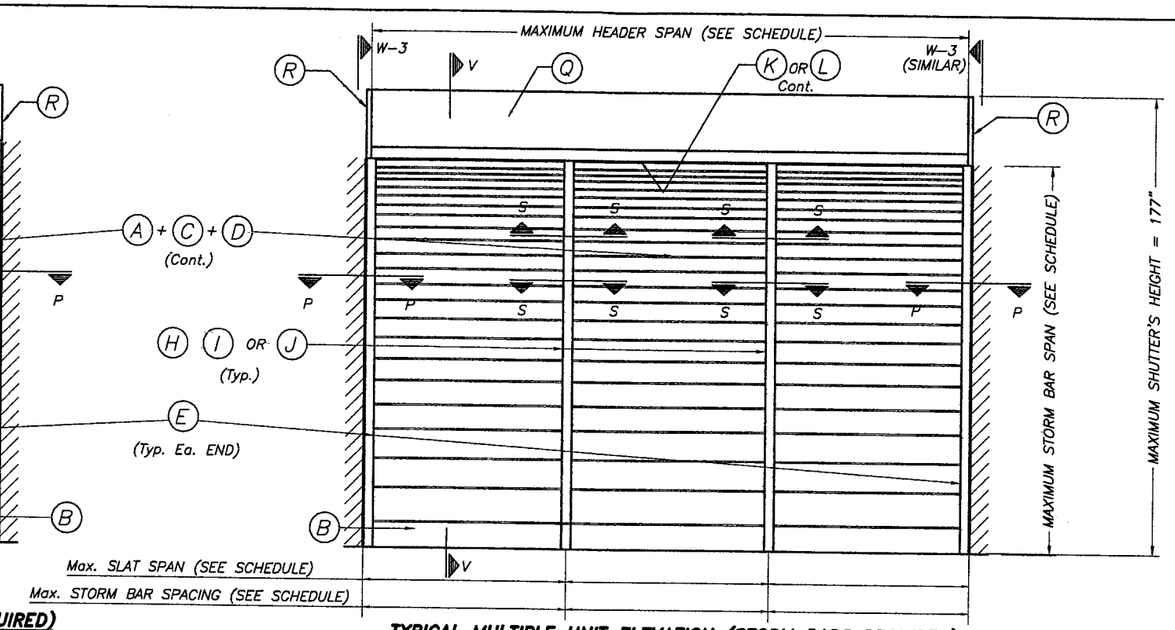

TYPICAL MULTIPLE UNIT ELEVATION (STORM BARS REQUIRED)

NOTE: SEE SHEET 3 & 4 OF 13 FOR COMPONENTS NOMENCLATURE.

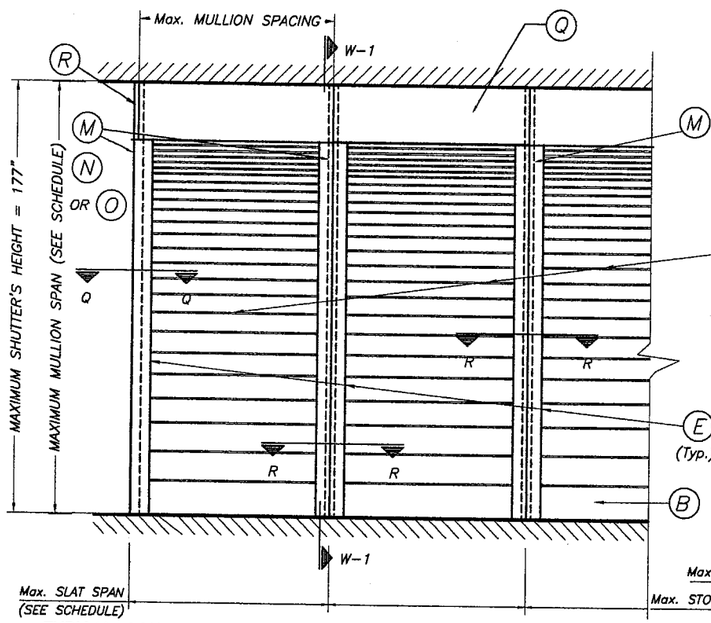

TYPICAL CONSECUTIVE SINGLE UNIT ELEVATION (NO STORM BARS REQUIRED)

NOTE: SEE SHEET 2 & 4 OF 13 FOR COMPONENTS NOMENCLATURE.

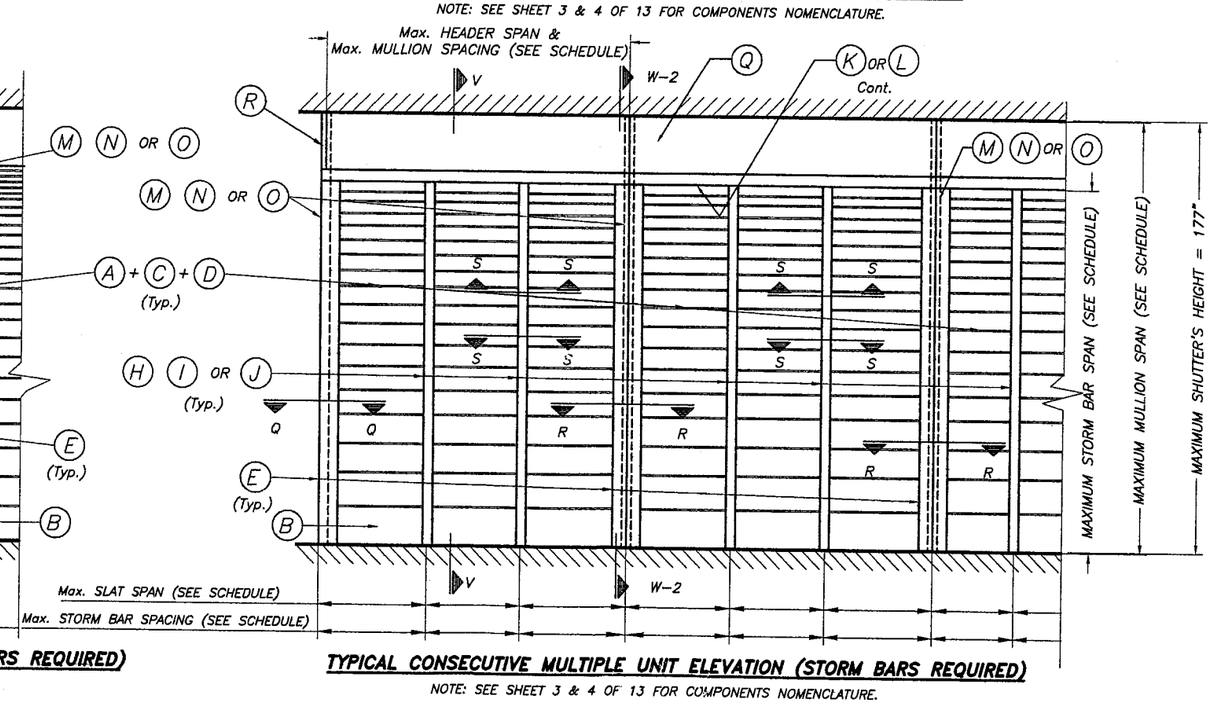

TYPICAL CONSECUTIVE MULTIPLE UNIT ELEVATION (STORM BARS REQUIRED)

NOTE: SEE SHEET 3 & 4 OF 13 FOR COMPONENTS NOMENCLATURE.

Approved as complying with the Florida Building Code
Date JANUARY 11 2007
NOAR 05-1005.01
Miami-Dade Product Control Division
By

F.B.C. (High Velocity Hurricane Zone)

NOTE:
SEE SECTIONS ON
SHEETS 5 THRU 8.

NOV 17 2006
P.E. SEAL/SIGNATURE/DATE

© 2005 TILTECO INC.

TILTECO INC.
TILLIT TESTING & ENGINEERING COMPANY
6355 N.W. 36th. St., Ste. 305, VIRGINIA GARDENS, Fl. 33166
Phone : (305)871-1530 . Fax : (305)871-1531
e-mail: tilteco@aol.com
EB-0006719
WALTER A. TILLIT Jr. P. E.
FLORIDA Lic. # 44167

EUSEC 2004 ROLL-UP SHUTTER

EUROLL SERVICE BV

PATRONSWEG 5
3892 DA ZEEWOLDE, NETHERLANDS

REV. No	DESCRIPTION	DATE	REV. No	DESCRIPTION	DATE
1	GENERAL	7/28/06	3		
2			4		

DRAWN BY S.M.

1/20/05 DATE

05-015 DRAWING No

SHEET 2 OF 13

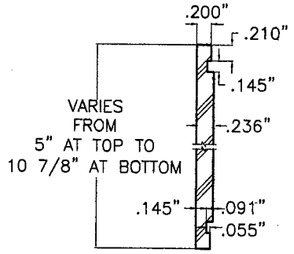

(A) SLAT:

6mm LEXAN POLYCARBONATE SHEET 9030
VARIES FROM 5" AT TOP TO 10 7/8" AT BOTTOM
SCALE: 1/2" = 1"

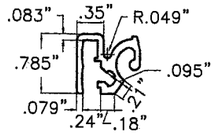

(C) TOP HINGE:

6063-T6 ALUMINUM ALLOY
SCALE: 1/2" = 1"

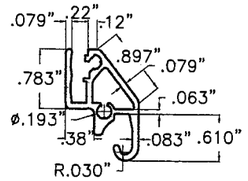

(D) BOTTOM HINGE:

6063-T6 ALUMINUM ALLOY
SCALE: 1/2" = 1"

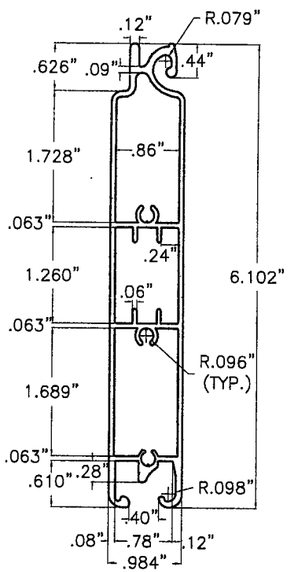

(B) BASE SLAT:

6063-T6 ALUMINUM ALLOY
SCALE: 1/2" = 1"

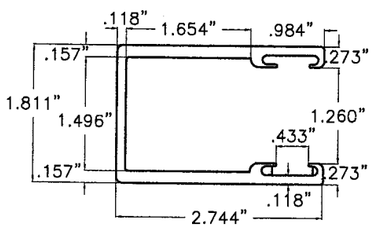

(E) SIDE RAIL:

6063-T6 ALUMINUM ALLOY
SCALE: 1/2" = 1"

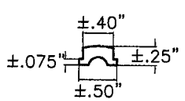

(E1) SIDE RAIL WEATHER STRIP:

SCALE: 1/2" = 1"

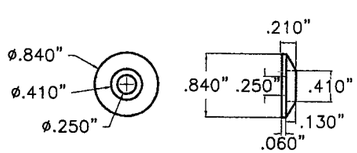

(F) NYLON END STOPS:

SCALE: 1/2" = 1"

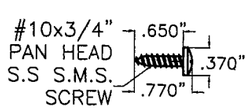

(G) STOP SCREWS:

SCALE: 1/2" = 1"

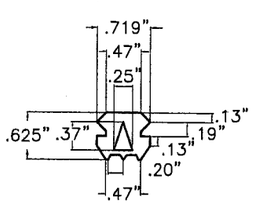

(B1) RUBBER WEATHER STRIP

6063-T6 ALUMINUM ALLOY
SCALE: 1/2" = 1"

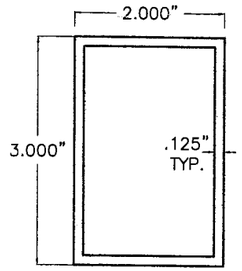

(H) TYPE 1 STORM BAR:

6063-T6 ALUMINUM ALLOY
SCALE: 1/2" = 1"

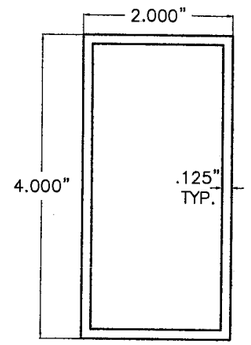

(I) TYPE 2 STORM BAR:

6063-T6 ALUMINUM ALLOY
SCALE: 1/2" = 1"

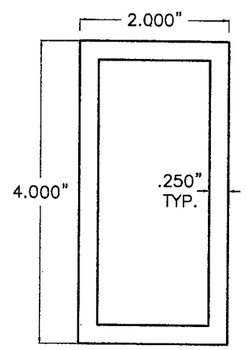

(J) TYPE 3 STORM BAR:

6063-T6 ALUMINUM ALLOY
SCALE: 1/2" = 1"

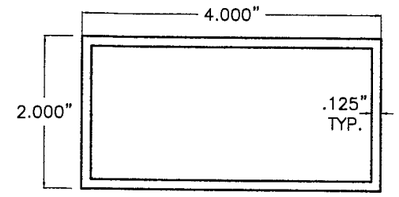

(K) TYPE 1 HEADER:

6063-T6 ALUMINUM ALLOY
SCALE: 1/2" = 1"

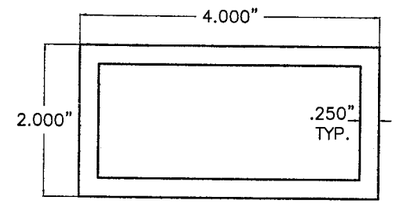

(L) TYPE 2 HEADER:

6063-T6 ALUMINUM ALLOY
SCALE: 1/2" = 1"

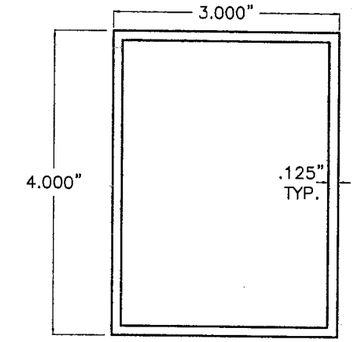

(M) TYPE 1 MULLION:

6063-T6 ALUMINUM ALLOY
SCALE: 1/2" = 1"

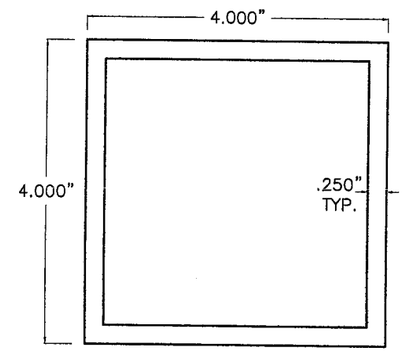

(N) TYPE 2 MULLION:

6063-T6 ALUMINUM ALLOY
SCALE: 1/2" = 1"

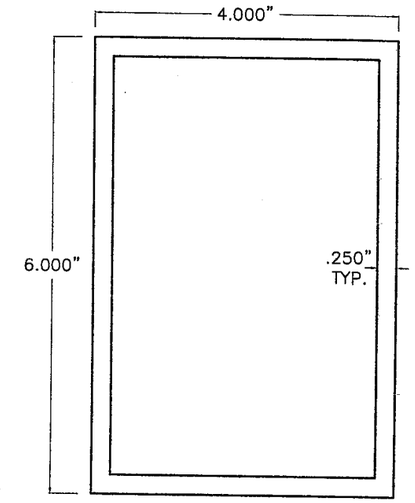

(O) TYPE 3 MULLION:

6063-T6 ALUMINUM ALLOY
SCALE: 1/2" = 1"

COMPONENTS

Approved as complying with the Florida Building Code
Date JANUARY 11 2007
NOA# 05-1005.01
Miami Dade Product Control Division
By

F.B.C. (High Velocity Hurricane Zone)

NOV 17 2006
P.E. SEAL/SIGNATURE/DATE

© 2005 TILTECO INC.

TILTECO INC.
TILLIT TESTING & ENGINEERING COMPANY
8355 N.W. 36th. St., Ste. 305, VIRGINIA GARDENS, Fl. 33166
Phone : (305)871-1530 . Fax : (305)871-1531
e-mail: tilteco@aol.com
EB-0006719
WALTER A. TILLIT Jr. P. E.
FLORIDA Lic. # 44167

EUSEC 2004 ROLL-UP SHUTTER

EUROLL SERVICE BV
PATRONSWEG 5
3892 DA ZEEWOLDE, NETHERLANDS

REV. No	DESCRIPTION	DATE	REV. No	DESCRIPTION	DATE
1	GENERAL	7/28/05	3		
2			4		

DRAWN BY S.M.
1/20/05 DATE
05-015 DRAWING No
SHEET 3 OF 13

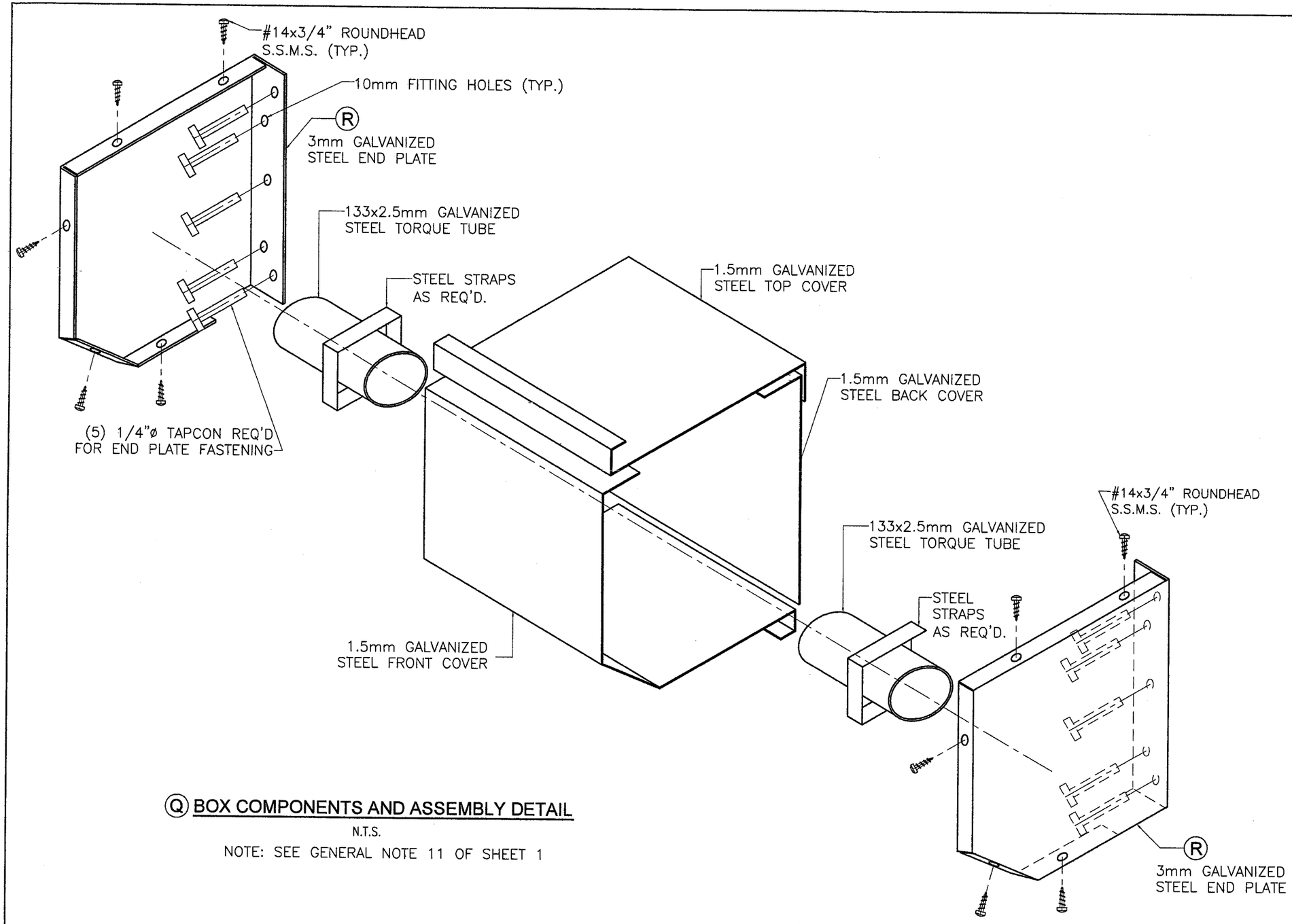

Q BOX COMPONENTS AND ASSEMBLY DETAIL

N.T.S.

NOTE: SEE GENERAL NOTE 11 OF SHEET 1

Approved as complying with the
Florida Building Code
Date JANUARY 11 2007
NOA# 05-1005.01
Miami Dade Product Control
Division
By

F.B.C. (High Velocity Hurricane Zone)

NOV 17 2006

P.E. SEAL/SIGNATURE/DATE

© 2005 TILTECO INC.

TILTECO INC.
TILLIT TESTING & ENGINEERING COMPANY
6355 N.W. 36th. St., Ste. 305, VIRGINIA GARDENS, Fl. 33166
Phone : (305)871-1530 . Fax : (305)871-1531
e-mail: tilteco@aol.com
EB-0006719
WALTER A. TILLIT Jr. P. E.
FLORIDA Lic. # 44167

EUSEC 2004 ROLL-UP SHUTTER

EUROLL SERVICE BV

PATRONSWEG 5
3892 DA ZEEWOLDE, NETHERLANDS

REV. No	DESCRIPTION	DATE	REV. No	DESCRIPTION	DATE
1	GENERAL	7/28/06	3		
2			4		

DRAWN BY S.M.

1/20/05 DATE

05-015 DRAWING No

SHEET 4 OF 13

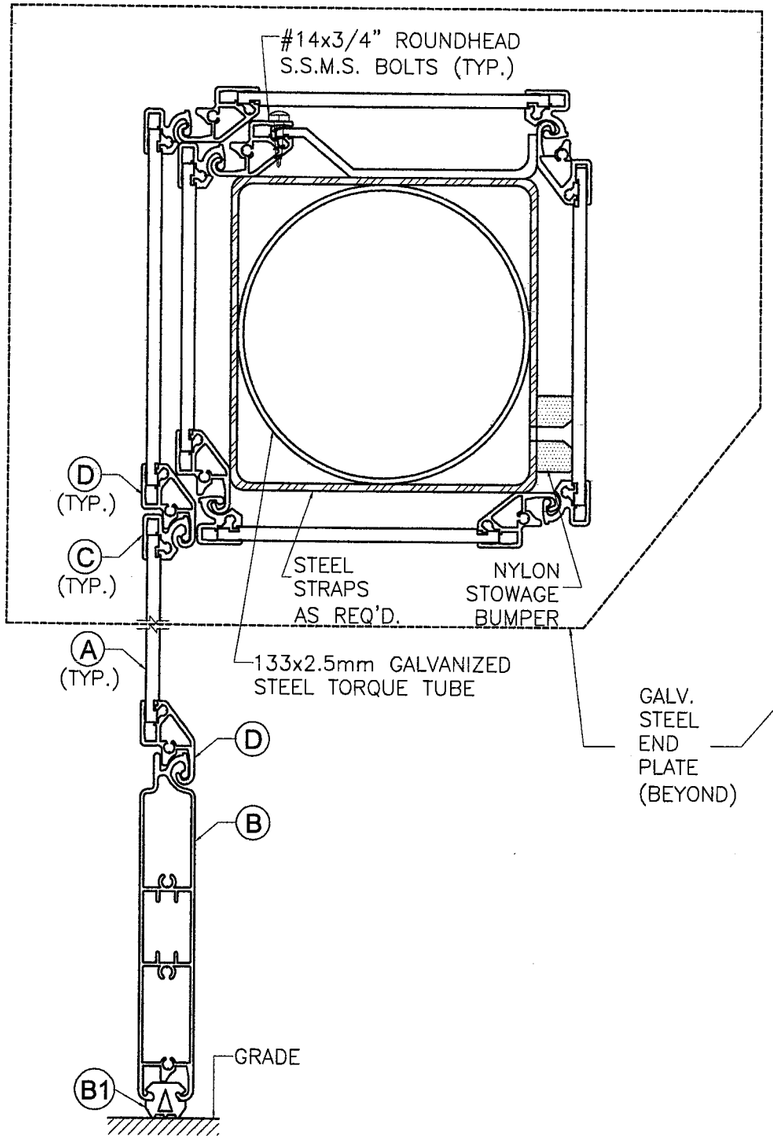

TORQUE TUBE & MOTOR HOUSING
(VALID FOR OVERALL SHUTTER HEIGHT UP TO 84")

N.T.S.

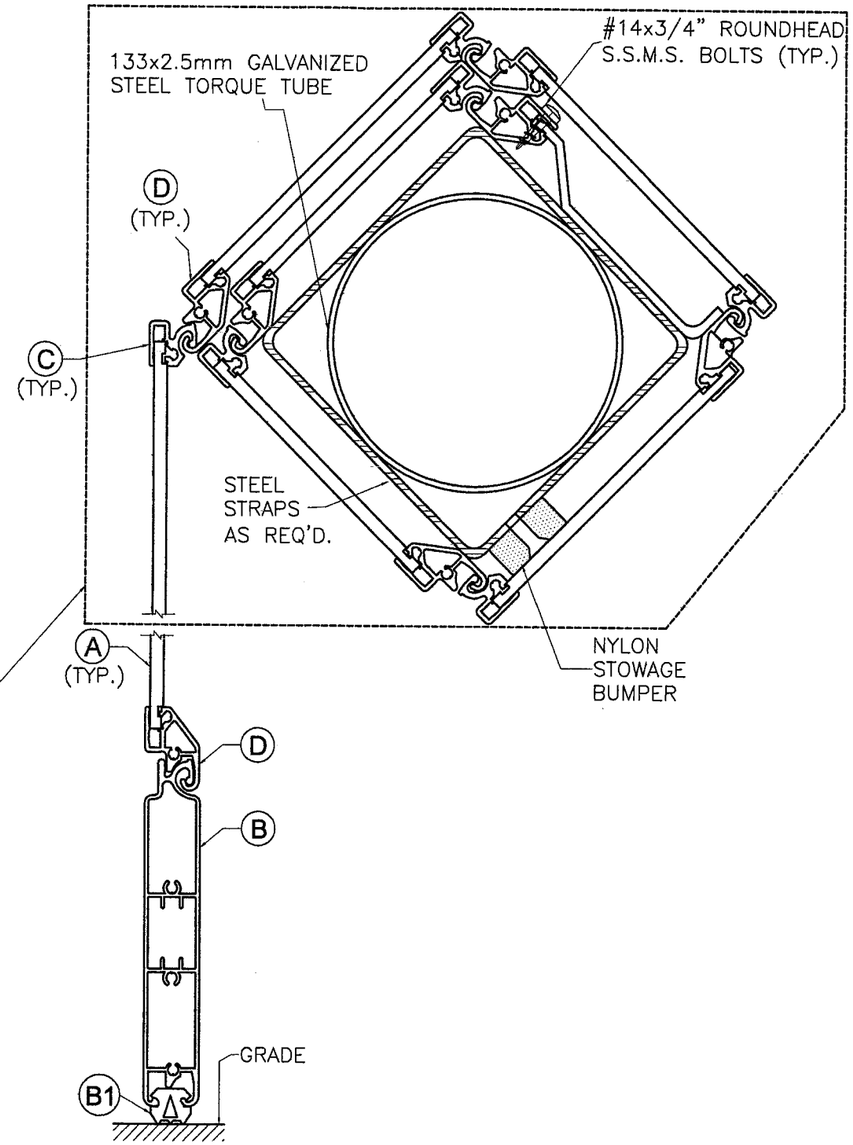

TORQUE TUBE & MOTOR HOUSING
(VALID FOR OVERALL SHUTTER HEIGHT GREATER THAN 84" UP TO 177")

N.T.S.

SPECIFICATIONS EUSEC 2004					TOTAL HEIGHT SHUTTER INCL. BOX
DIMENSIONS IN INCHES					
NO. PANEL	LEXAN HEIGHT	ALU.+LEXAN HEIGHT	ROLL-UP DIAMETER	BOX SIZE	
1	5.12"	5.91"	8.82"	11.80"	11.80"
2	5.12"	5.91"	8.82"	11.80"	17.70"
3	5.71"	6.50"	10.20"	11.80"	24.20"
4	5.71"	6.50"	10.20"	11.80"	30.70"
5	6.30"	7.09"	11"	11.80"	37.80"
6	6.30"	7.09"	11"	11.80"	44.90"
7	6.89"	7.68"	11.60"	11.80"	52.60"
8	6.89"	7.68"	12.60"	13.80"	60.20"
9	7.48"	8.27"	13.40"	13.80"	68.50"
10	7.48"	8.27"	13.40"	13.80"	76.80"
11	8.07"	8.86"	13.40"	13.80"	85.60"
12	8.07"	8.86"	14.20"	15.70"	94.50"
13	8.66"	9.45"	15.40"	15.70"	104"
14	8.66"	9.45"	15.40"	15.70"	113"
15	9.25"	10"	15.40"	15.70"	123"
16	9.25"	10"	16.10"	17.70"	133"
17	9.84"	10.60"	16.10"	17.70"	144"
18	9.84"	10.60"	16.10"	17.70"	155"
19	9.40"	11.20"	17.30"	17.70"	166"
20	9.40"	11.20"	17.30"	17.70"	177"

Approved as complying with the
Florida Building Code
Date JANUARY 11 2007
NOA# 05-1005.01
Miami Dade Product Control
Division
By

F.B.C. (High Velocity Hurricane Zone)

NOV 17 2006
P.E. SEAL/SIGNATURE/DATE

© 2005 TILTECO INC.

TILTECO INC.
TILLIT TESTING & ENGINEERING COMPANY
6355 N.W. 36th. St., Ste. 305, VIRGINIA GARDENS, Fl. 33166
Phone : (305)871-1530 . Fax : (305)871-1531
e-mail: tilteco@aol.com
EB-0006719
WALTER A. TILLIT Jr. P. E.
FLORIDA Lic. # 44167

EUSEC 2004 ROLL-UP SHUTTER

EUROLL SERVICE BV
PATRONSWEG 5
3892 DA ZEEWOLDE, NETHERLANDS

REV. No	DESCRIPTION	DATE	REV. No	DESCRIPTION	DATE
1	GENERAL	7/28/05	3		
2			4		

DRAWN BY S.M.
1/20/05 DATE
05-015 DRAWING No
SHEET 4A OF 13

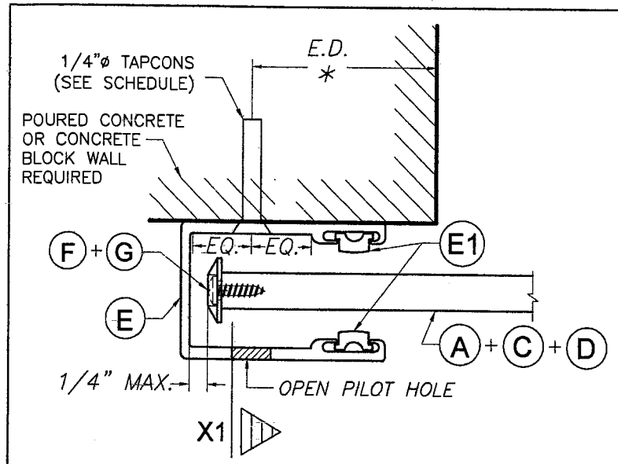

SECTION P - P (1) : WALL MOUNT

SCALE: 1/2" = 1"

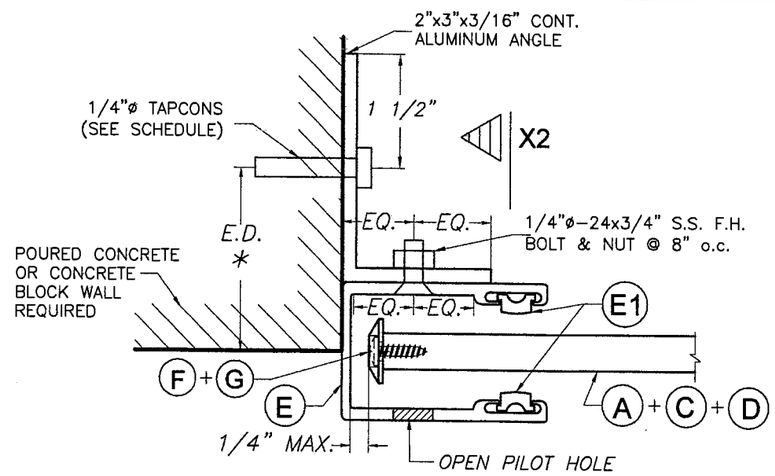

SECTION P - P (2) : SIDE WALL MOUNT

SCALE: 1/2" = 1"

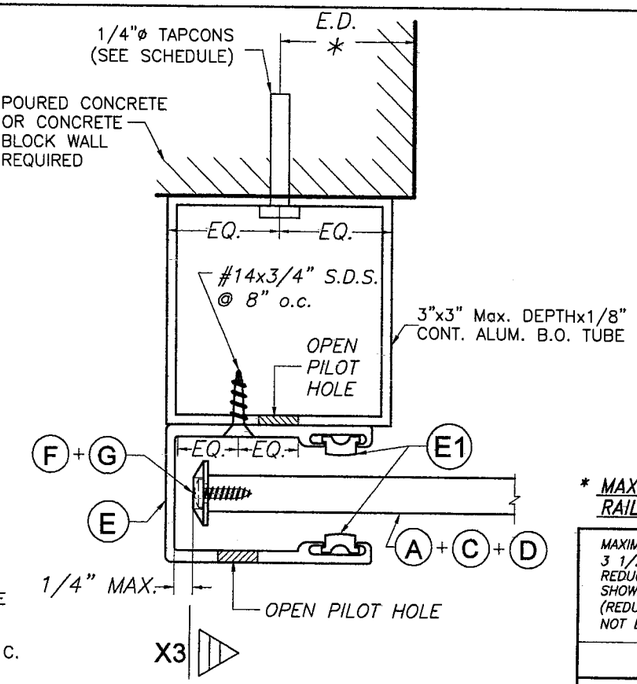

SECTION P - P (3) : BUILD-OUT

SCALE: 1/2" = 1"

*** MAXIMUM ANCHOR SPACING (in.) AT SIDE RAILS VERSUS EDGE DISTANCE = E. D.**

MAXIMUM ANCHOR SPACING ARE VALID FOR 3 1/2" EDGE DISTANCE. FOR E. D. LESS THAN 3 1/2", REDUCE ANCHOR SPACING BY MULTIPLYING SPACING SHOWN ON SCHEDULE BY THE FOLLOWING FACTORS (REDUCED SPACING OBTAINED USING FACTORS SHALL NOT BE LESS THAN 3"):

ACTUAL E. D.	FACTOR
3"	.86
2 1/2"	.75
2"	.50

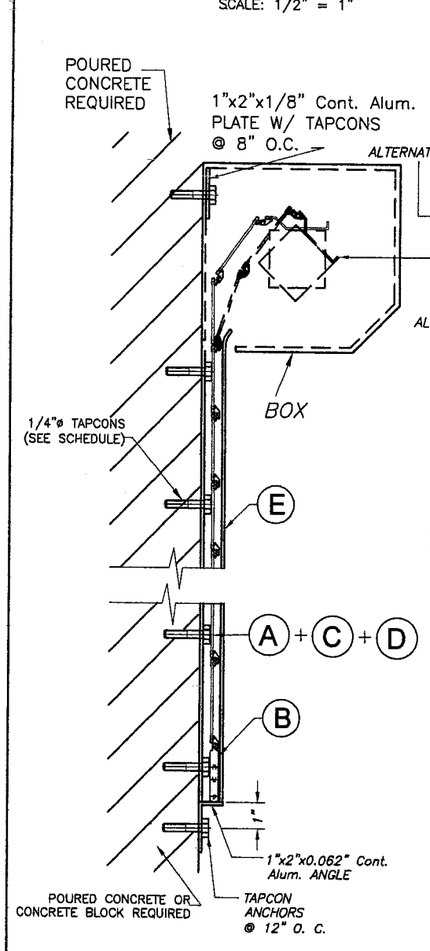

SECTION X - X (1)

N. T. S.

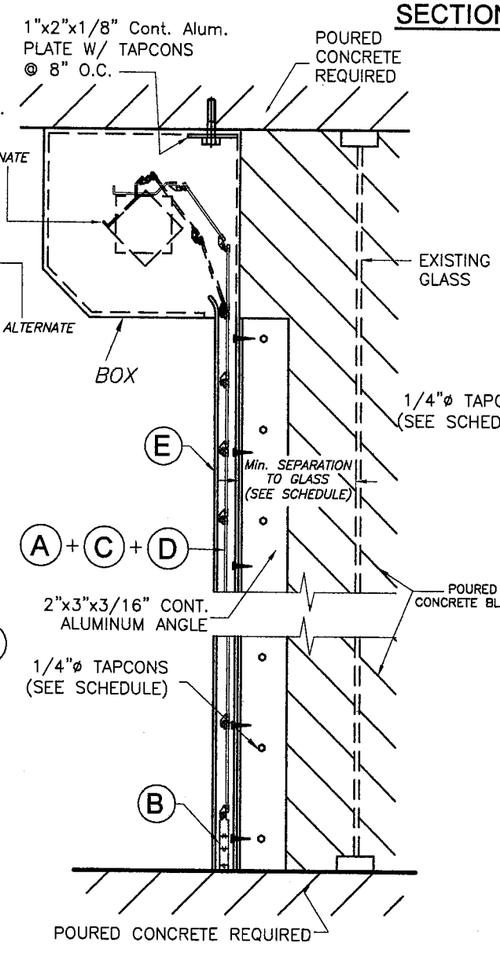

SECTION X - X (2)

N. T. S.

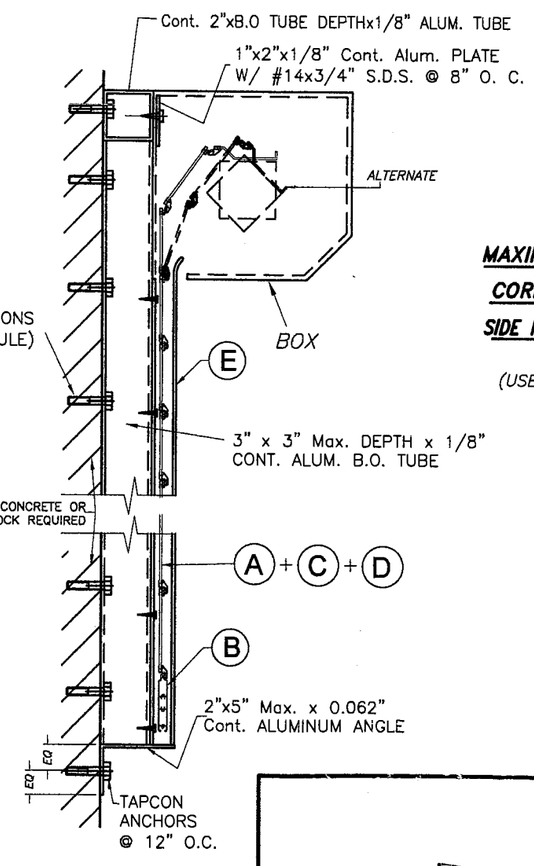

SECTION X - X (3)

N. T. S.

SIDE RAIL ANCHOR SCHEDULE

MAXIMUM DESIGN PRESSURE RATING "W" (p. s. f.) AND CORRESPONDING MAXIMUM ANCHOR SPACING(In) * FOR SIDE RAIL E CONNECTION TO POURED CONCRETE OR CONCRETE BLOCK

(USE MAXIMUM VALUES BETWEEN POSITIVE AND NEGATIVE LOAD))

MAXIMUM DESIGN LOAD "W" (p.s.f.)	SIDE RAIL (E)		
	WALL MOUNT	INSIDE MOUNT	BUILD-OUT MOUNT
75 OR LESS	8"	7 1/2"	8"
	8"	8"	8"
>75 TO 90	8"	6 1/2"	8"
	8"	8"	8"
>90 TO 125	8"	5 1/2"	7 1/2"
	8"	8"	8"
>125 TO 160	8"	5"	7"
	8"	8"	8"

SUBSTRATE LEGEND
CONCRETE BLOCK
POURED CONCRETE

Approved as complying with the Florida Building Code
Date JANUARY 11 2007
NOA# 05-1005.01
Miami Dade Product Control Division
By

F.B.C. (High Velocity Hurricane Zone)

NOV 17 2006
P.E. SEAL/SIGNATURE/DATE

© 2005 TILTECO INC.

TILTECO INC.
TILLIT TESTING & ENGINEERING COMPANY
6355 N.W. 36th. St., Ste. 305, VIRGINIA GARDENS, Fl. 33166
Phone : (305)871-1530 . Fax : (305)871-1531
e-mail: tilteco@aol.com
EB-0006719
WALTER A. TILLIT Jr. P. E.
FLORIDA Lic. # 44167

EUSEC 2004 ROLL-UP SHUTTER

EUROLL SERVICE BV

PATRONSWEG 5
3892 DA ZEEWOLDE, NETHERLANDS

REV. No	DESCRIPTION	DATE	REV. No	DESCRIPTION	DATE
1	GENERAL	7/28/06	3		
2			4		

DRAWN BY S.M.
1/20/05 DATE
05-015 DRAWING No
SHEET 5 OF 13

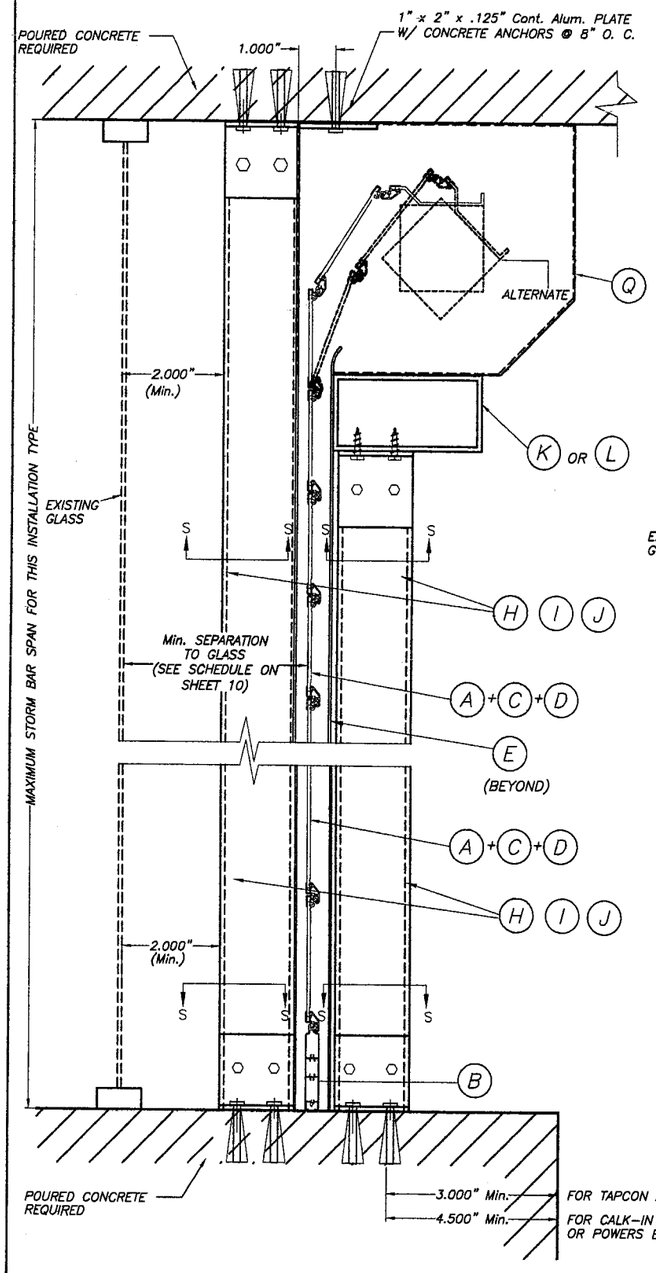

CEILING & FLOOR MOUNTING SECTION V-V(2) INSTALLATION W/ FIXED OR REMOVABLE STORM BARS W/ CONCRETE ANCHORS

(SEE SECTION "S" FOR ANCHOR TYPE REQUIREMENT)

SCALE : 1/4" = 1"

SINGLE SPAN SECTIONS AND DETAILS ARE SIMILAR TO ABOVE SHOWN WITHOUT STORM BAR & HEADERS.

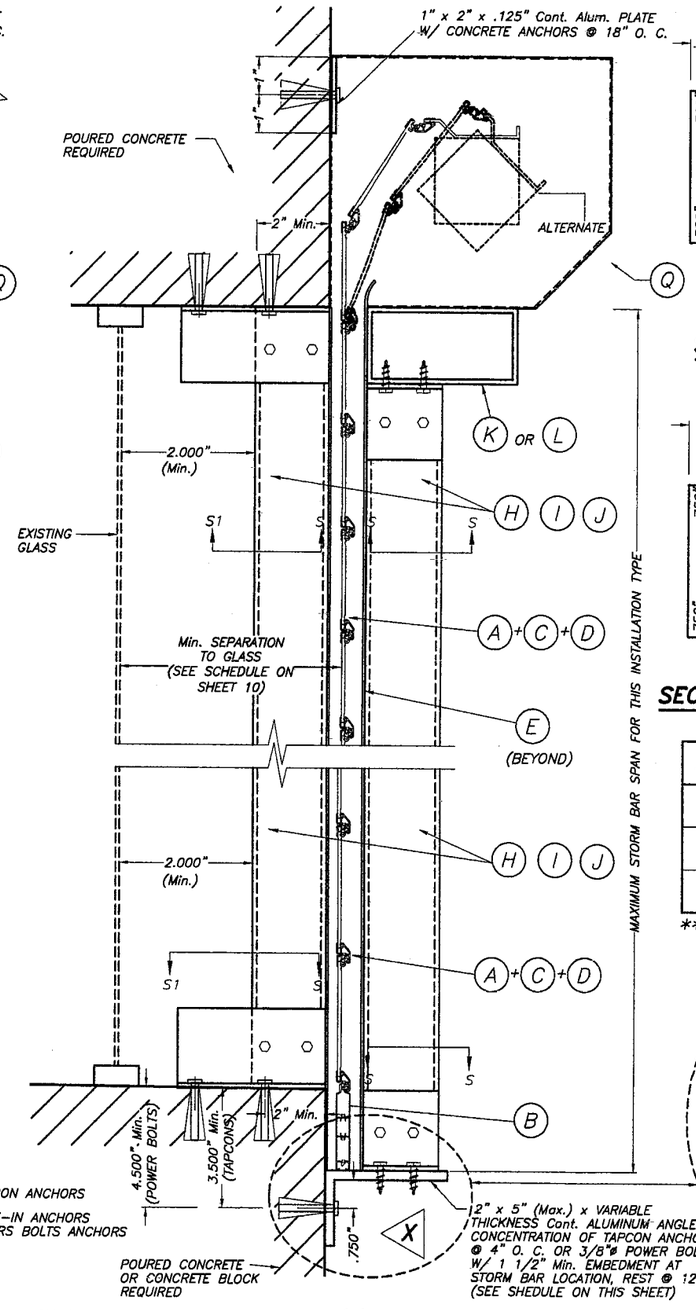

WALL MOUNTING SECTION V-V(1) INSTALLATION W/ FIXED STORM BARS W/ CONCRETE ANCHORS

SCALE : 1/4" = 1"

SECTIONS V – V

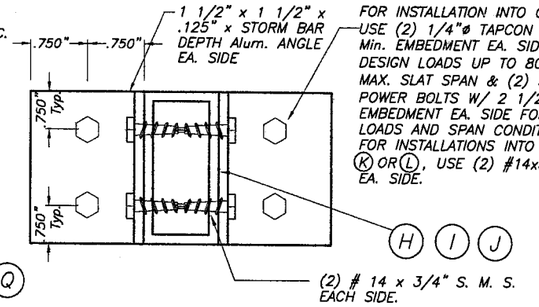

SECTION S – S (FOR FIXED STORM BAR)

SCALE : 1/2" = 1"

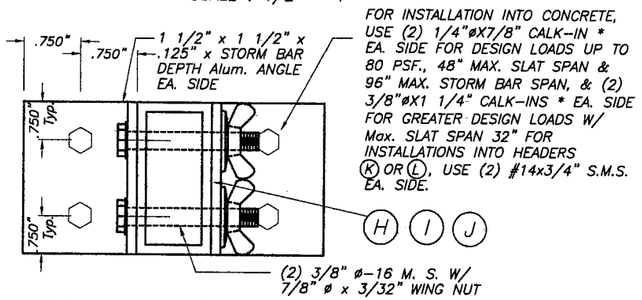

SECTION S – S (FOR REMOVABLE STORM BAR)

SCALE : 1/2" = 1"

ANCHOR & ANGLE SCHEDULE FOR ELEVATION X

DESIGN LOAD (psf)	ANCHOR TYPE & QUANTITY	ANGLE THICKNESS
72.0 OR LESS **	(6) 1/4" ø TAPCONS	1/8"
160 OR LESS	(6) 3/8" ø POWER BOLTS	1/4"

** W/ 4'-0" Max. SLAT SPAN & 8'-0" MAX. STORM BAR SPAN

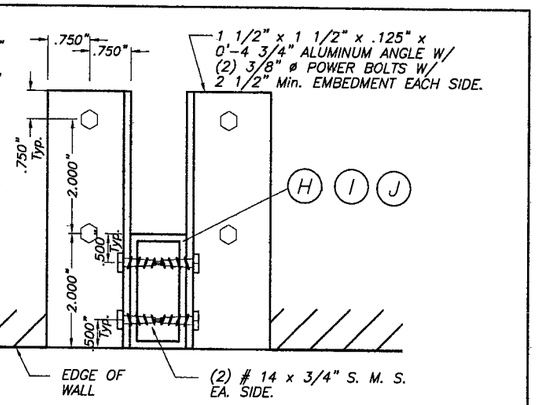

SECTION S1 – S1

SCALE : 1/4" = 1"

* 1/4" ø-20 OR 3/8" ø-16 MACHINE SCREWS USED JOINTLY W/ 1/4" ø x 7/8" OR 3/8" ø x 1 1/4" CALK-IN ANCHORS RESPECTIVELY SHALL BE LEFT TOGETHER W/ ANCHORS AT THE TIME STORM BARS ARE REMOVED. (SEE DET. A).

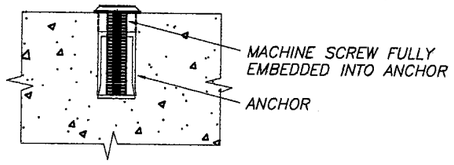

DETAIL A

SCALE : 1/2" = 1"

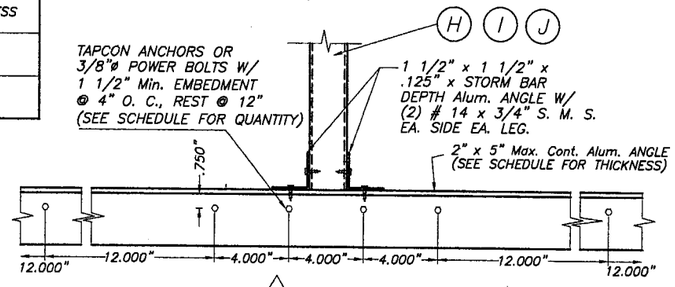

ELEVATION X

SCALE : 1/8" = 1"

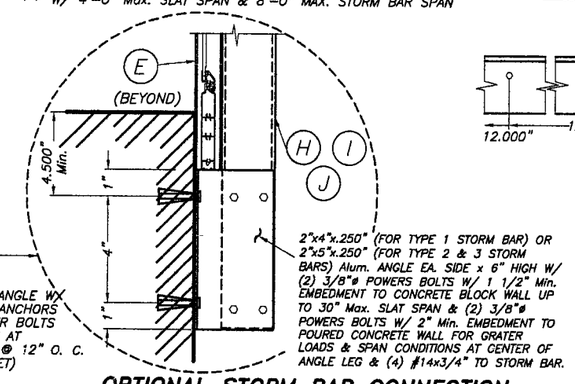

OPTIONAL STORM BAR CONNECTION

Approved as complying with the Florida Building Code
Date JANUARY 11 2007
NOA# 05-1005.01
Miami Dade Product Control Division
By

F.B.C. (High Velocity Hurricane Zone)

NOV 17 2006

P.E. SEAL/SIGNATURE/DATE

© 2005 TILTECO INC.

TILTECO INC.
TILLIT TESTING & ENGINEERING COMPANY
6355 N.W. 36th. St., Ste. 305, VIRGINIA GARDENS, Fl. 33166
Phone : (305)871-1530 . Fax : (305)871-1531
e-mail: tilteco@aol.com
EB-0006719
WALTER A. TILLIT Jr. P. E.
FLORIDA Lic. # 44167

EUSEC 2004 ROLL-UP SHUTTER

EUROLL SERVICE BV
PATRONSWEG 5
3892 DA ZEEWOLDE, NETHERLANDS

REV. No	DESCRIPTION	DATE	REV. No	DESCRIPTION	DATE
1	GENERAL	7/28/06	3		
2			4		

DRAWN BY S.M.
1/20/05 DATE
05-015 DRAWING No
SHEET 6 OF 13

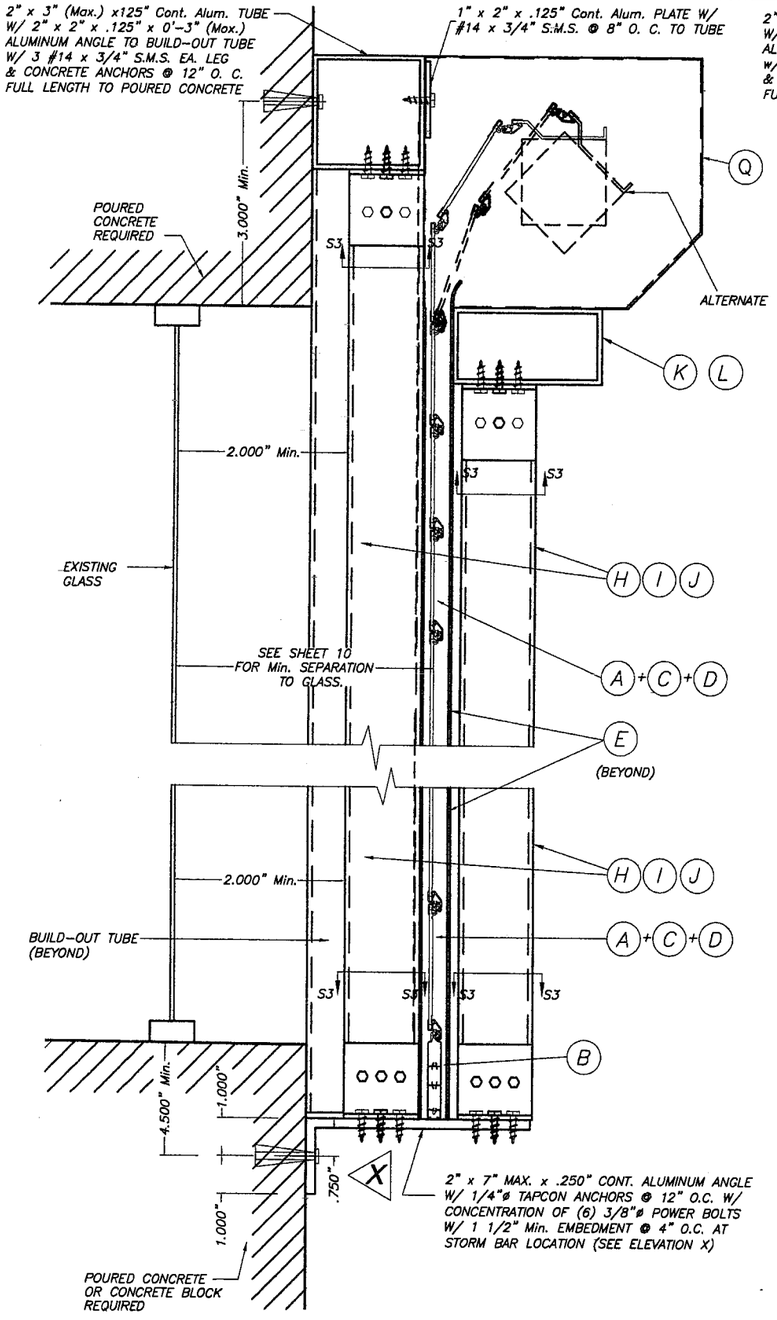

CASE I

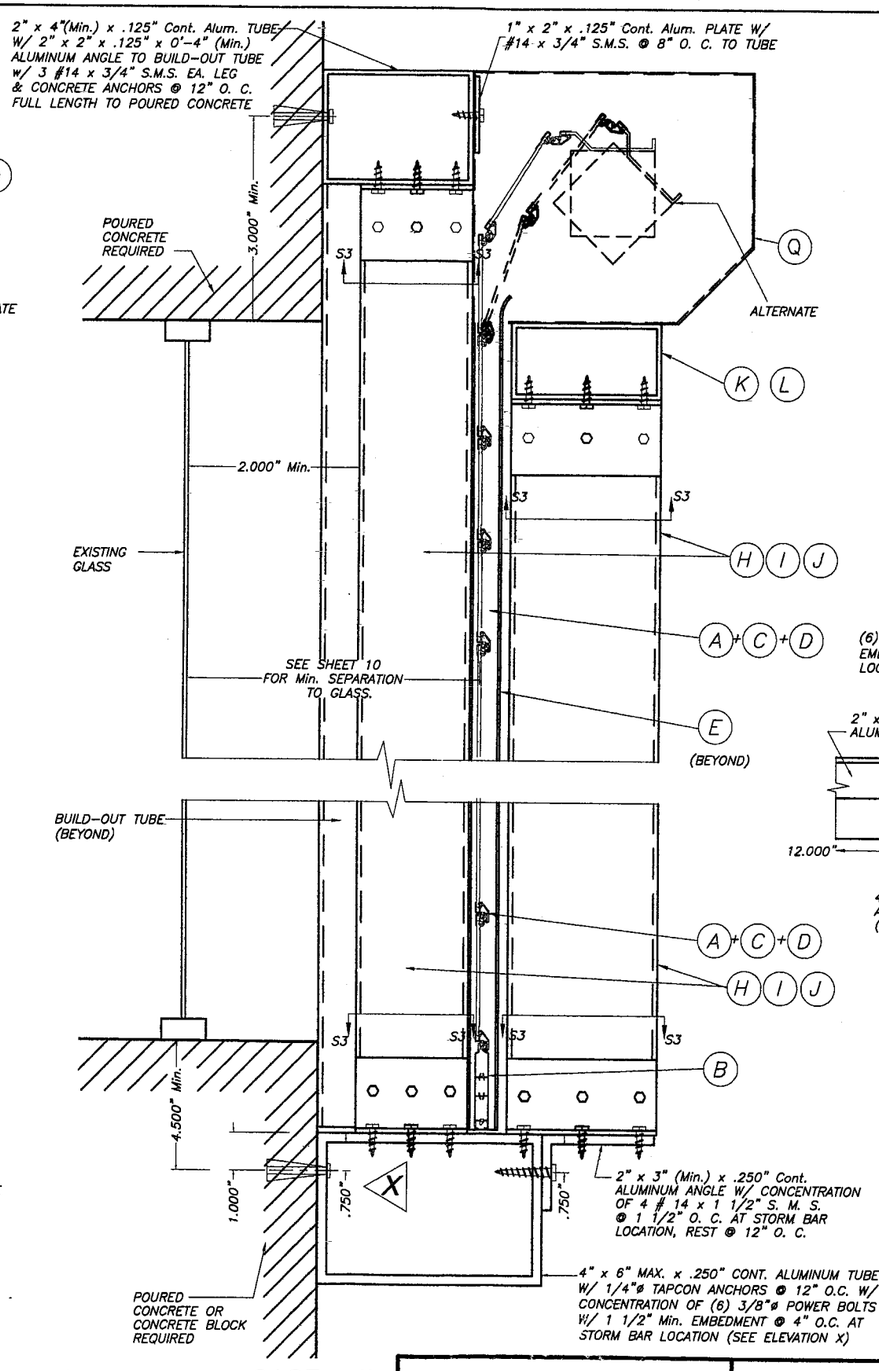

CASE II

FIXED STORM BAR CONNECTION AT BUILD-OUT INSTALLATIONS W/SHEET METAL SCREWS

SCALE : 1/4" = 1"

NOTE:
SINGLE SPAN SECTIONS AND DETAILS ARE SIMILAR TO ABOVE SHOWN WITHOUT STORM BAR & HEADERS.

SECTIONS V – V(3)

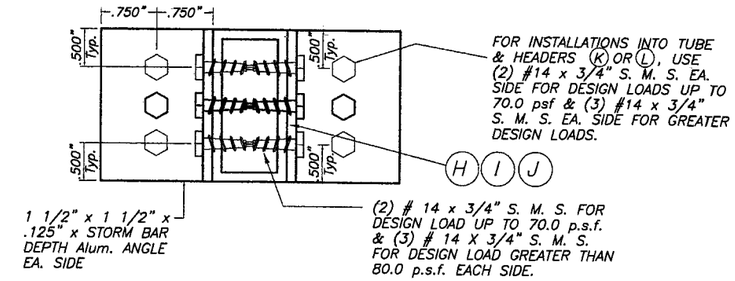

SECTION S3 – S3

SCALE : 1/2" = 1"

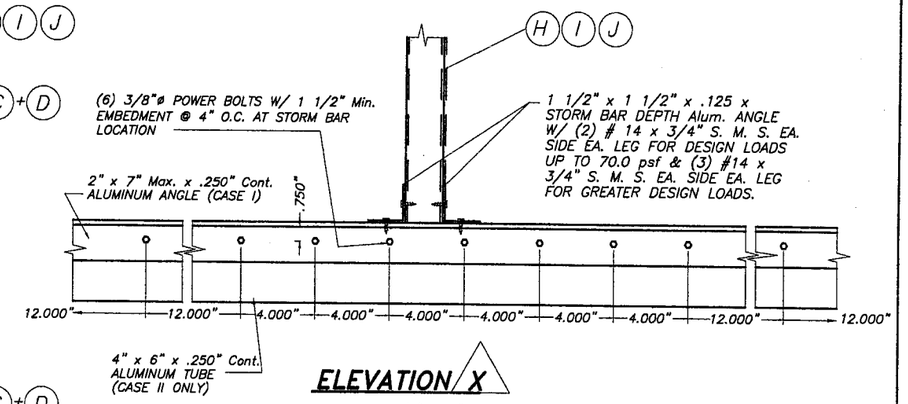

ELEVATION X

SCALE : 1/8" = 1"

Approved as complying with the Florida Building Code
Date JANUARY 11 2007
NOA# 05-1005.01
Miami Dade Product Control Division
By

F.B.C. (High Velocity Hurricane Zone)

NOV 17 2005
P.E. SEAL/SIGNATURE/DATE

© 2005 TILTECO INC.

TILTECO INC.
TILLIT TESTING & ENGINEERING COMPANY
6355 N.W. 36th. St., Ste. 305, VIRGINIA GARDENS, Fl. 33166
Phone : (305)871-1530 . Fax : (305)871-1531
e-mail: tilteco@aol.com
EB-0006719
WALTER A. TILLIT Jr. P. E.
FLORIDA Lic. # 44167

EUSEC 2004 ROLL-UP SHUTTER

EUROLL SERVICE BV
PATRONSWEG 5
3892 DA ZEEWOLDE, NETHERLANDS

REV. No	DESCRIPTION	DATE	REV. No	DESCRIPTION	DATE
1	GENERAL	7/28/05	3		
2			4		

DRAWN BY S.M.
1/20/05 DATE
05-015 DRAWING No
SHEET 7 OF 13

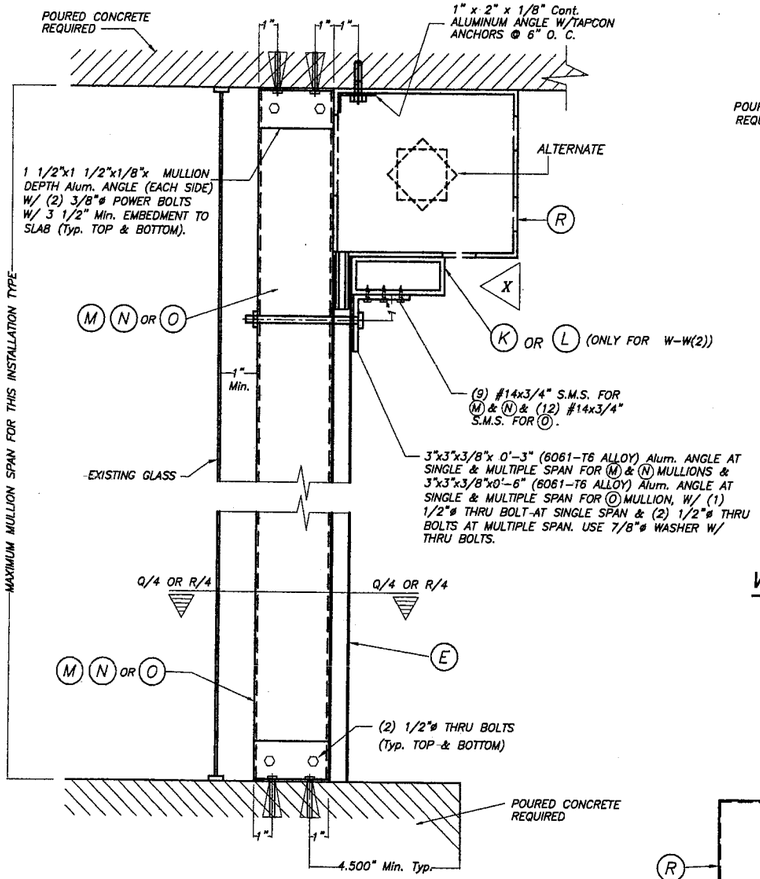

FLOOR/CEILING MOUNTING : SECTION W-W (1), W/O HEADER SECTION W-W (2), W/HEADER

SCALE : 1/8" = 1"

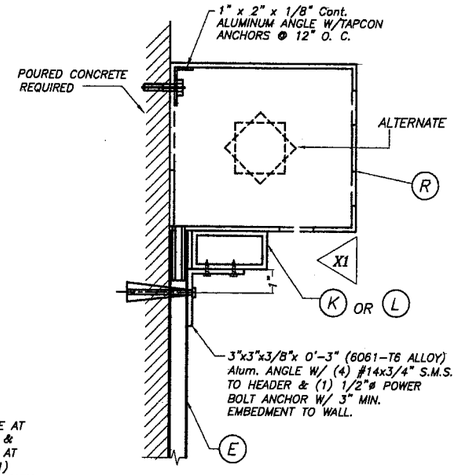

ALTERNATIVE: 1 WALL MOUNTING : SECTION W-W (3)

SCALE : 1/8" = 1"

NOTE :
THIS INSTALLATION IS ONLY VALID FOR STORM BARS WITH Max. SPAN = 8'-0", HEADERS WITH 12'-0" Max. SINGLE SPAN & 85 psf MAXIMUM DESIGN LOAD OR FOR STORM BARS WITH MAX. SPAN = 6'-0"; HEADERS WITH 16'-0" MAX. SINGLE SPAN & 85 p.s.f. MAXIMUM DESIGN LOAD.

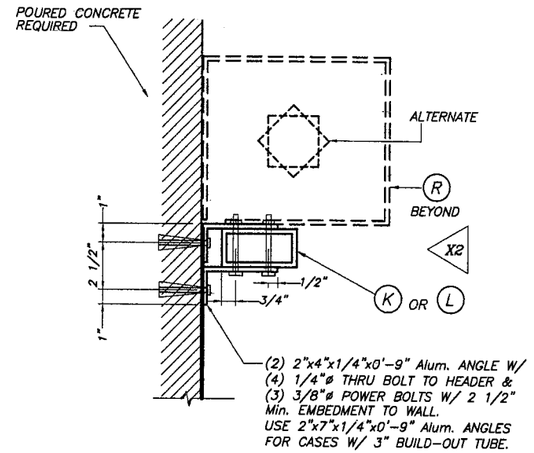

ALTERNATIVE: 2 WALL MOUNTING : SECTION W-W(3)

SCALE : 1/8" = 1"

NOTE: VALID FOR ALL SPANS AND LOAD COMBINATIONS

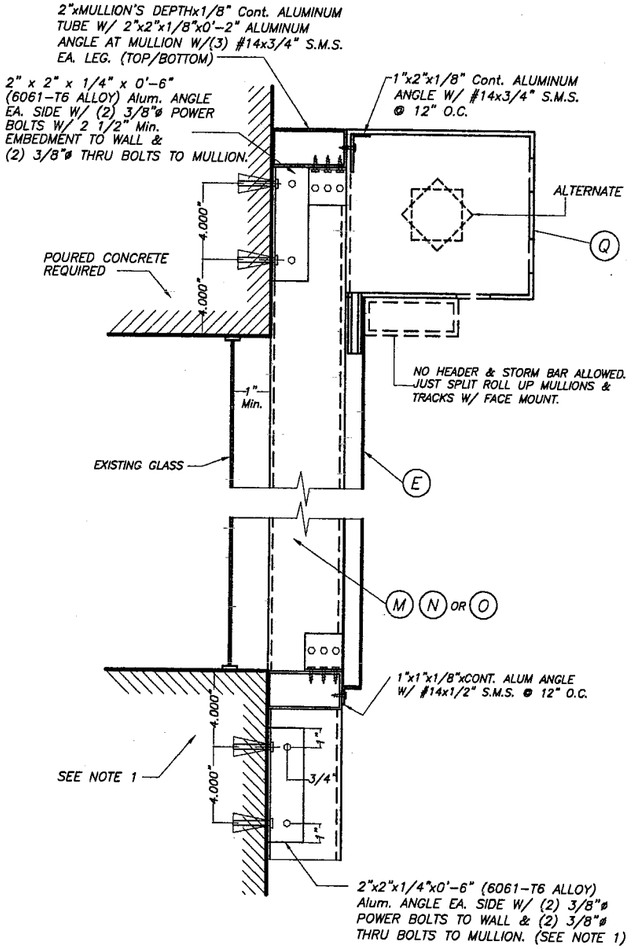

WALL MOUNTING : MULLION CONNECTION AT TOP & BOTTOM : SECTION W-W (1)

SCALE : 1/8" = 1"

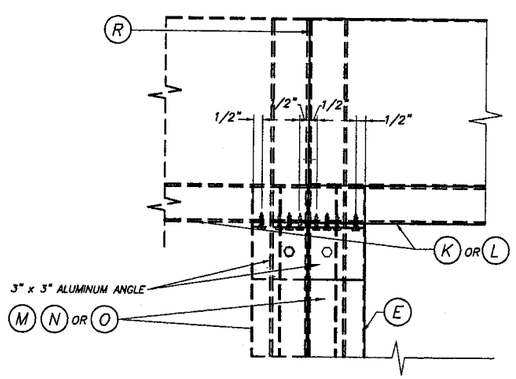

ELEVATION X

SCALE : 1/8" = 1"

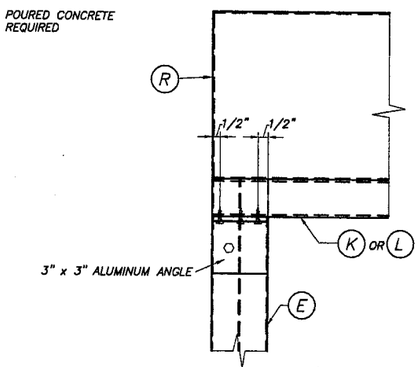

ELEVATION X1

SCALE : 1/8" = 1"

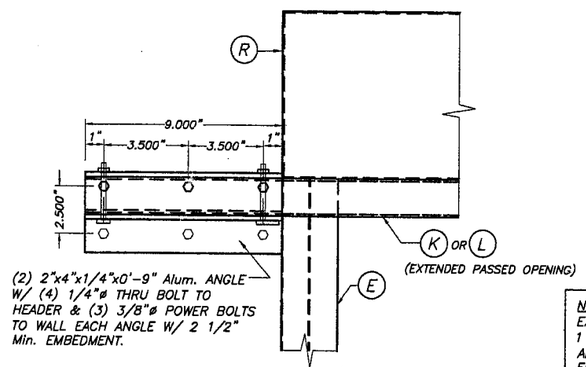

ELEVATION X2

SCALE : 1/8" = 1"

TYPICAL HEADER CONNECTION AT ENDS: SECTIONS W-W

NOTE 1:
EXISTING WALL MAY BE POURED CONCRETE OR CONCRETE BLOCK W/ 1 1/2" Min. ANCHOR EMBEDMENT W/ 6'-0" Max. MULLION SPAN AND SHALL BE POURED CONCRETE W/ 2 1/2" Min. ANCHOR EMBEDMENT FOR ALL MULLION SPANS AND LOAD COMBINATIONS.

Approved as complying with the Florida Building Code
Date JANUARY 11 2007
NOA# 05-1005.01
Miami Dade Product Control Division
By

F.B.C. (High Velocity Hurricane Zone)

NOV 1 7 2006
P.E. SEAL/SIGNATURE/DATE

© 2005 TILTECO INC.

TILTECO INC.
TILLIT TESTING & ENGINEERING COMPANY
6355 N.W. 36th. St., Ste. 305, VIRGINIA GARDENS, Fl. 33166
Phone : (305)871-1530 . Fax : (305)871-1531
e-mail: tilteco@aol.com
EB-0006719
WALTER A. TILLIT Jr. P. E.
FLORIDA Lic. # 44167

EUSEC 2004 ROLL-UP SHUTTER

EUROLL SERVICE BV

PATRONSWEG 5
3892 DA ZEEWOLDE, NETHERLANDS

REV. No	DESCRIPTION	DATE	REV. No	DESCRIPTION	DATE
1	GENERAL	7/28/06	3		
2			4		

DRAWN BY S.M.
1/20/05 DATE
05-015 DRAWING No
SHEET 8 OF 13

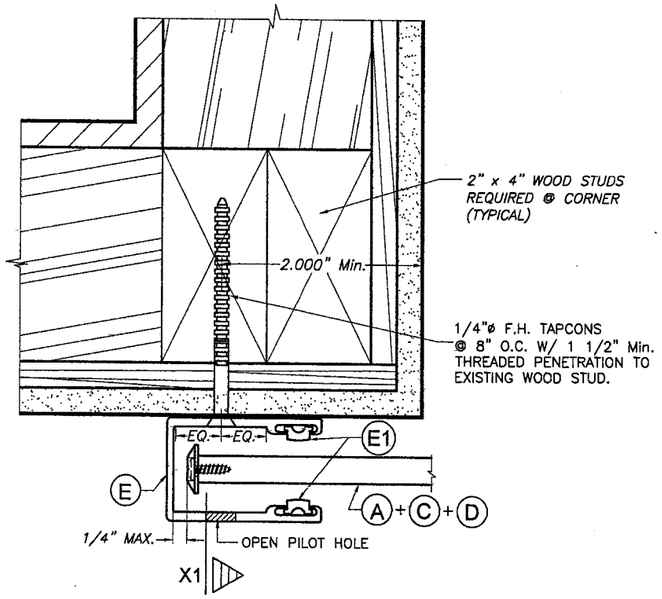

SECTION P - P (1) : WALL MOUNT

SCALE : 3/8" = 1"

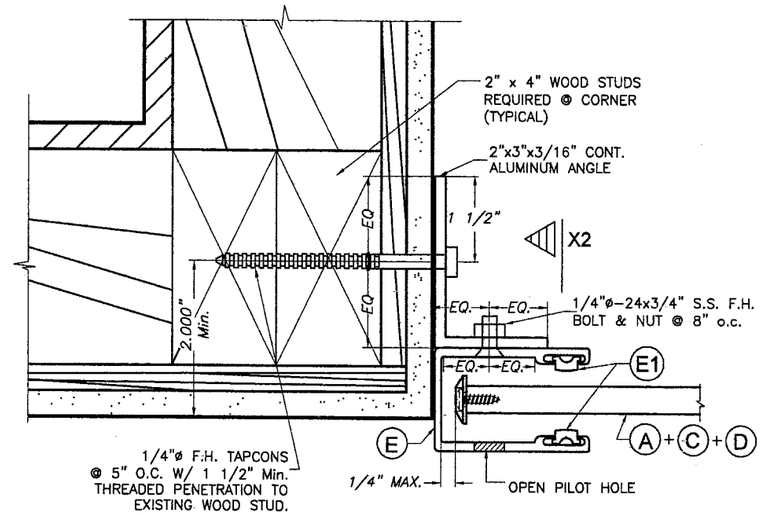

SECTION P - P (2) : SIDE WALL MOUNT

SCALE: 3/8" = 1"

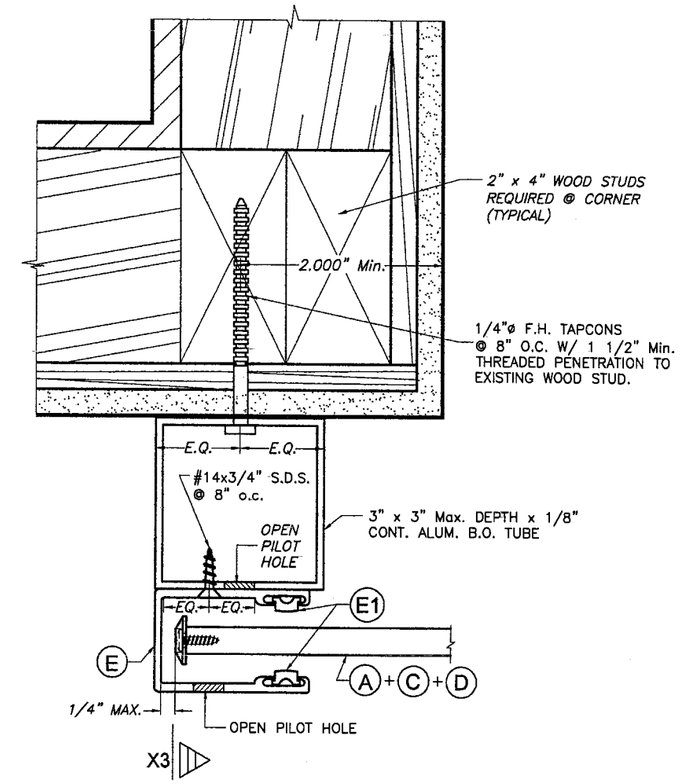

SECTION P - P (3) : BUILD-OUT

SCALE: 3/8" = 1"

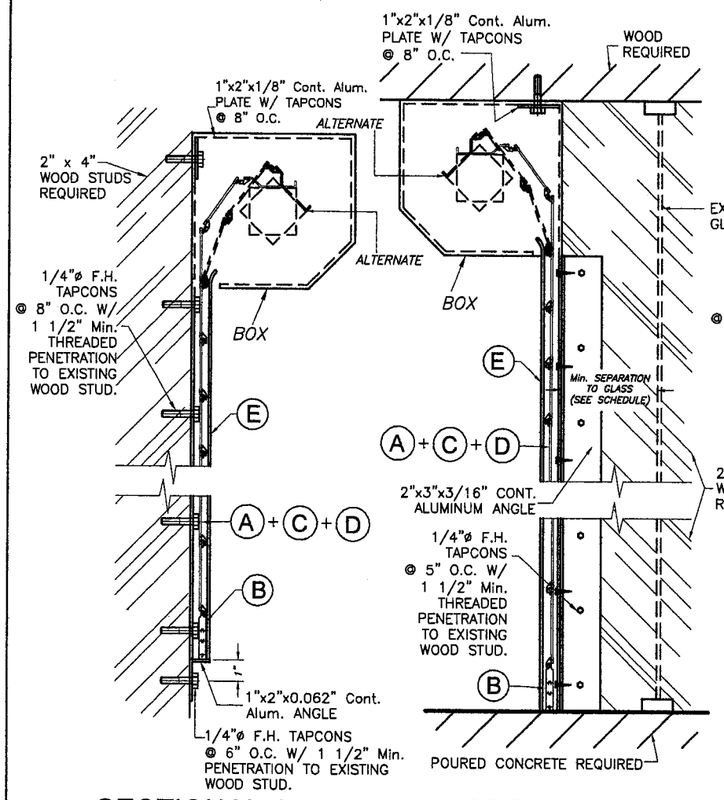

SECTION X - X (1)

N. T. S.

SECTION X - X (2)

N. T. S.

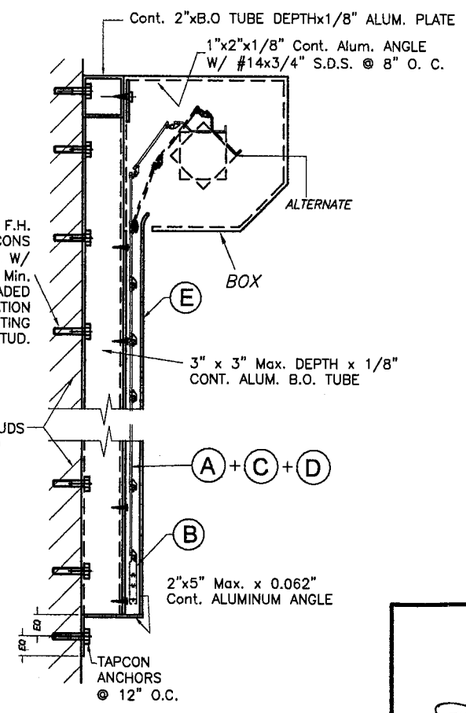

SECTION X - X (3)

N. T. S.

NOTES:

1. INSTALLATIONS ARE ONLY VALID FOR BUILDINGS WITH DESIGN LOADS UP TO 75.0 psf.
2. FOR NEW FRAME CONSTRUCTION: WOOD MEMBER TO BE SOUTHERN PINE No. 2 W/ SPECIFIC DENSITY OF 0.55 OR EQUAL.
3. MINIMUM THREADED PENETRATION OF TAPCONS INTO WOOD MEMBER TO BE 1 1/2".
4. INSTALLATION IN WOOD FRAME BUILDINGS ARE LIMITED TO SINGLE UNITS W/O STORM BARS OR MULLIONS.

Approved as complying with the Florida Building Code
Date JANUARY 11 2007
NOA# 05-1005.01
Miami Dade Product Control Division
By

F.B.C. (High Velocity Hurricane Zone)

NOV 17 2006
P.E. SEAL/SIGNATURE/DATE

© 2005 TILTECO INC.

TILTECO INC.
TILLIT TESTING & ENGINEERING COMPANY
6355 N.W. 36th. St., Ste. 305, VIRGINIA GARDENS, Fl. 33166
Phone : (305)871-1530 . Fax : (305)871-1531
e-mail: tilteco@aol.com
EB-0006719
WALTER A. TILLIT Jr. P. E.
FLORIDA Lic. # 44167

EUSEC 2004 ROLL-UP SHUTTER

EUROLL SERVICE BV

PATRONSWEG 5
3892 DA ZEEWOLDE, NETHERLANDS

REV. No	DESCRIPTION	DATE	REV. No	DESCRIPTION	DATE
1	GENERAL	7/28/06	3		
2			4		

DRAWN BY S.M.
1/20/05 DATE
05-015 DRAWING No
SHEET 9 OF 13

SLAT PERFORMANCE CHART
MAXIMUM DESIGN PRESSURE RATING "W" (p. s. f.)
AND CORRESPONDING MAXIMUM SLAT SPAN "L" FOR TYPE 1 SLAT

(USE MAXIMUM VALUES BETWEEN POSITIVE AND NEGATIVE LOADS)

SLAT TYPE / Max. DESIGN LOAD "W" (p.s.f.)	MAXIMUM SLAT SPAN	MINIMUM SEPARATION TO GLASS	
	SINGLE & MULTIPLE UNIT *	SINGLE & MULTIPLE UNIT **	SINGLE & MULTIPLE UNIT ***
35.0 OR LESS	6'-4"	3"	3"
40.0	6'-1"	3"	3"
45.0	5'-11"	3"	3"
50.0	5'-9"	3"	3"
55.0	5'-8"	3"	3"
60.0	5'-6"	3"	3"
65.0	5'-5"	3"	3"
70.0	5'-4"	3"	3"
75.0	5'-3"	3"	3"
80.0	5'-2"	3"	3"
85.0	5'-1"	3"	3"
90.0	5'-0"	3"	3"
95.0	4'-11"	3"	3"
100.0	4'-10"	3"	3"
105.0	4'-9"	3"	3"
110.0	4'-7"	3"	3"
115.0	4'-6"	3"	3"
120.0	4'-5"	3"	3"
125.0	4'-4"	3"	3"
130.0	4'-3"	3"	3"
135.0	4'-2"	3"	3"
140.0	4'-1"	3"	3"
145.0	4'-0"	3"	3"
150.0	3'-11"	3"	3"
155.0	3'-11"	3"	3"
160.0	3'-10"	3"	3"

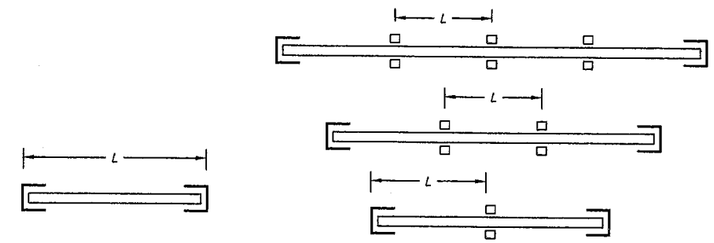

SINGLE SPAN

MULTIPLE SPAN

SPAN LAYOUT

* SPANS VALID FOR EVERY INSTALLATION LOCATED AT ANY ELEVATION OF BUILDING MEASURED AT BOTTOM OF SHUTTER. MINIMUM SEPARATION TO GLASS FOR SINGLE AND MULTIPLE UNITS SHALL BE MEASURED FROM BACK OF SLAT TO GLASS.

** MINIMUM SEPARATION TO GLASS FOR SHUTTERS INSTALLED WITHIN THE FIRST 30'-0" ELEVATION OF BUILDING AND MAXIMUM SPAN. SEE TABLE 1 FOR Min. SEPARATION TO GLASS FOR SPANS LESS THAN THE Max. ALLOWED.

*** MINIMUM SEPARATION TO GLASS FOR SHUTTERS INSTALLED ABOVE 30'-0" ELEVATION OF BUILDING, MEASURED AT BOTTOM OF SHUTTER.

TABLE 1:

SLAT SPAN (ft.)	MINIMUM SEPARATION TO GLASS
80" OR LESS	3"

Approved as complying with the Florida Building Code
Date JANUARY 11 2007
NOA# 05-1005.01
Miami Dade Product Control Division
By

F.B.C. (High Velocity Hurricane Zone)

NOV 1 2006

P.E. SEAL/SIGNATURE/DATE

© 2005 TILTECO INC.

TILTECO INC.
TILLIT TESTING & ENGINEERING COMPANY
6355 N.W. 36th. St., Ste. 305, VIRGINIA GARDENS, FL 33166
Phone : (305)871-1530 . Fax : (305)871-1531
e-mail: tilteco@aol.com
EB-0006719
WALTER A. TILLIT Jr. P. E.
FLORIDA Lic. # 44167

EUSEC 2004 ROLL-UP SHUTTER

EUROLL SERVICE BV
PATRONSWEG 5
3892 DA ZEEWOLDE, NETHERLANDS

REV. No	DESCRIPTION	DATE	REV. No	DESCRIPTION	DATE
1	GENERAL	7/26/06	3		
2			4		

DRAWN BY S.M.

1/20/05 DATE

05-015 DRAWING No

SHEET 10 OF 13

STORM BAR LOADING CHART

MAXIMUM DESIGN PRESSURE RATING "W" (p. s. f.) AND CORRESPONDING MAXIMUM SPAN "L" FOR A GIVEN TYPE OF STORM BAR AND STORM BAR SPACING.

(USE MAXIMUM VALUES BETWEEN POSITIVE AND NEGATIVE LOADS)

MAX. SPAN FOR STORM BARS W/REGULAR CONCRETE ANCHORS

MAXIMUM DESIGN LOAD "W" (p.s.f.)	(H) TYPE 1 STORM BAR 2" x 3" x 0.125"					(I) TYPE 2 STORM BAR 2" x 4" x0.125"					(J) TYPE 3 STORM BAR 2" x 4" x0.25"				
	* STORM BAR SPACING					* STORM BAR SPACING					* STORM BAR SPACING				
	⩽ 3'-0"	3' TO 4'	4' TO 5'	5' TO 6'	6' TO 6.5'	⩽ 3'-0"	3' TO 4'	4' TO 5'	5' TO 6'	6' TO 6.5'	< 3'-0"	3' TO 4'	4' TO 5'	5' TO 6'	6' TO 6.5'
40 OR LESS	8'-0"	7'-10"	7'-0"	6'-4"	6'-1"	10'-0"	9'-6"	8'-7"	7'-10"	7'-6"	14'-1"	13'-1"	12'-5"	11'-10"	11'-7"
45	8'-0"	7'-4"	6'-7"	6'-0"	5'-9"	9'-11"	9'-0"	8'-1"	7'-5"	7'-1"	13'-8"	12'-9"	12'-0"	11'-6"	11'-3"
50	8'-0"	7'-0"	6'-3"	5'-8"	5'-6"	9'-8"	8'-7"	7'-8"	7'-0"	6'-9"	13'-4"	12'-5"	11'-9"	11'-2"	11'-0"
55	7'-8"	6'-8"	5'-11"	5'-5"	–	9'-5"	8'-2"	7'-4"	6'-8"	–	13'-0"	12'-1"	11'-5"	10'-11"	–
60	7'-4"	6'-4"	5'-8"	5'-2"	–	9'-0"	7'-10"	7'-0"	6'-5"	–	12'-9"	11'-10"	11'-2"	10'-8"	–
65	7'-1"	6'-1"	5'-6"	5'-0"	–	8'-8"	7'-6"	6'-9"	6'-2"	–	12'-6"	11'-7"	11'-0"	10'-6"	–
70	6'-10"	5'-11"	5'-3"	4'-10"	–	8'-4"	7'-3"	6'-6"	5'-11"	–	12'-3"	11'-5"	10'-9"	10'-4"	–
75	6'-7"	5'-8"	5'-1"	4'-8"	–	8'-1"	7'-0"	6'-3"	5'-9"	–	12'-0"	11'-2"	10'-7"	10'-1"	–
80	6'-4"	5'-6"	4'-11"	4'-6"	–	7'-10"	6'-9"	6'-1"	5'-6"	–	11'-10"	11'-0"	10'-5"	9'-11"	–
85	6'-2"	5'-4"	4'-9"	4'-4"	–	7'-7"	6'-7"	5'-11"	5'-4"	–	11'-8"	10'-10"	10'-3"	9'-10"	–
90	6'-0"	5'-2"	4'-8"	4'-3"	–	7'-5"	6'-5"	5'-9"	5'-3"	–	11'-6"	10'-8"	10'-1"	9'-8"	–
95	5'-10"	5'-1"	4'-6"	4'-2"	–	7'-2"	6'-3"	5'-7"	5'-1"	–	11'-4"	10'-7"	10'-0"	9'-5"	–
100	5'-8"	4'-11"	4'-5"	4'-0"	–	7'-0"	6'-1"	5'-5"	4'-11"	–	11'-2"	10'-5"	9'-10"	9'-2"	–
105	5'-7"	4'-10"	4'-4"	3'-11"	–	6'-10"	5'-11"	5'-4"	4'-10"	–	11'-1"	10'-4"	9'-9"	8'-11"	–
110	5'-5"	4'-8"	4'-2"	3'-10"	–	6'-8"	5'-9"	5'-2"	4'-9"	–	10'-11"	10'-2"	9'-7"	8'-9"	–
115	5'-4"	4'-7"	4'-1"	3'-9"	–	6'-6"	5'-8"	5'-1"	4'-7"	–	10'-10"	10'-1"	9'-4"	8'-7"	–
120	5'-2"	4'-6"	4'-0"	3'-8"	–	6'-5"	5'-6"	4'-11"	4'-6"	–	10'-8"	9'-11"	9'-2"	8'-4"	–
125	5'-1"	4'-5"	3'-11"	3'-7"	–	6'-3"	5'-5"	4'-10"	4'-5"	–	10'-7"	9'-10"	9'-0"	8'-2"	–
130	5'-0"	4'-4"	3'-10"	3'-6"	–	6'-2"	5'-4"	4'-9"	4'-4"	–	10'-6"	9'-9"	8'-10"	8'-0"	–
135	4'-11"	4'-3"	3'-10"	3'-6"	–	6'-0"	5'-3"	4'-8"	4'-3"	–	10'-5"	9'-8"	8'-8"	7'-11"	–
140	4'-10"	4'-2"	3'-9"	3'-5"	–	5'-11"	5'-1"	4'-7"	4'-2"	–	10'-4"	9'-6"	8'-6"	7'-9"	–
145	4'-9"	4'-1"	3'-8"	3'-4"	–	5'-10"	5'-0"	4'-6"	4'-1"	–	10'-2"	9'-4"	8'-4"	7'-7"	–
150	4'-8"	4'-0"	3'-7"	3'-3"	–	5'-9"	4'-11"	4'-5"	4'-1"	–	10'-1"	9'-2"	8'-2"	7'-6"	–
155	4'-7"	4'-0"	3'-6"	3'-3"	–	5'-7"	4'-10"	4'-4"	4'-0"	–	10'-0"	9'-0"	8'-1"	7'-4"	–
160	4'-6"	3'-11"	3'-6"	3'-2"	–	5'-6"	4'-10"	4'-3"	3'-11"	–	9'-11"	8'-10"	7'-11"	7'-3"	–

* STORM BAR SPACING SHALL BE SUCH THAT MAXIMUM SLAT SPAN SHALL NOT BE EXCEEDED.

Approved as complying with the Florida Building Code
Date JANUARY 11 2007
NOA# 05-1005.01
Miami Dade Product Control Division
By

F.B.C. (High Velocity Hurricane Zone)

NOV 17 2006
P.E. SEAL/SIGNATURE/DATE

© 2005 TILTECO INC.

TILTECO INC.
TILLIT TESTING & ENGINEERING COMPANY
6355 N.W. 36th. St., Ste. 305, VIRGINIA GARDENS, Fl. 33166
Phone : (305)871-1530 . Fax : (305)871-1531
e-mail: tilteco@aol.com
EB-0006719
WALTER A. TILLIT Jr. P. E.
FLORIDA Lic. # 44167

EUSEC 2004 ROLL-UP SHUTTER

EUROLL SERVICE BV
PATRONSWEG 5
3892 DA ZEEWOLDE, NETHERLANDS

REV. No	DESCRIPTION	DATE	REV. No	DESCRIPTION	DATE
1	GENERAL	7/28/06	3		
2			4		

DRAWN BY S.M.
1/20/05 DATE
05-015 DRAWING No
SHEET 11 OF 13

HEADER LOADING CHART

MAXIMUM DESIGN PRESSURE RATING "W" (p. s. f.) AND CORRESPONDING MAXIMUM SPAN "L" FOR A GIVEN TYPE OF HEADER.

(USE MAXIMUM VALUES BETWEEN POSITIVE AND NEGATIVE LOADS)

MAXIMUM DESIGN LOAD "W" (p.s.f.)	(K) TYPE 1 HEADER 2" x 4" x.125"		(L) TYPE 2 HEADER 2" x 4" x.250"				
	STORM BAR HEIGHT		STORM BAR HEIGHT				
	≤ 5'-0"	5' TO 8'	≤ 6'-0"	6' TO 8'	8' TO 10'	10' TO 12'	12' TO 14'
40.0 OR LESS	12'-2"	9'-8"	14'-10"	12'-10"	11'-6"	10'-6"	9'-9"
45.0	11'-6"	9'-1"	14'-0"	12'-2"	10'-10"	9'-11"	9'-2"
50.0	10'-11"	8'-8"	13'-3"	11'-6"	10'-4"	9'-5"	8'-8"
55.0	10'-5"	8'-3"	12'-8"	11'-0"	9'-10"	9'-0"	8'-4"
60.0	10'-0"	7'-10"	12'-2"	10'-6"	9'-5"	8'-7"	7'-11"
65.0	9'-7"	7'-7"	11'-8"	10'-1"	9'-0"	8'-3"	7'-8"
70.0	9'-3"	7'-3"	11'-3"	9'-9"	8'-8"	7'-11"	7'-4"
75.0	8'-11"	7'-1"	10'-10"	9'-5"	8'-5"	7'-8"	7'-1"
80.0	8'-8"	6'-10"	10'-6"	9'-1"	8'-2"	7'-5"	6'-11"
85.0	8'-4"	6'-7"	10'-2"	8'-10"	7'-11"	7'-3"	6'-8"
90.0	8'-2"	6'-5"	9'-11"	8'-7"	7'-8"	7'-0"	6'-6"
95.0	7'-11"	6'-3"	9'-8"	8'-4"	7'-6"	6'-10"	6'-4"
100.0	7'-9"	6'-1"	9'-5"	8'-2"	7'-3"	6'-8"	6'-2"
105.0	7'-6"	5'-11"	9'-2"	7'-11"	7'-1"	6'-6"	6'-0"
110.0	7'-4"	5'-10"	9'-0"	7'-9"	6'-11"	6'-4"	5'-10"
115.0	7'-2"	5'-8"	8'-9"	7'-7"	6'-9"	6'-2"	5'-9"
120.0	7'-1"	5'-7"	8'-7"	7'-5"	6'-8"	6'-1"	5'-7"
125.0	6'-11"	5'-5"	8'-5"	7'-3"	6'-6"	5'-11"	5'-6"
130.0	6'-9"	5'-4"	8'-3"	7'-2"	6'-5"	5'-10"	5'-5"
135.0	6'-8"	5'-3"	8'-1"	7'-0"	6'-3"	5'-9"	5'-4"
140.0	6'-6"	5'-2"	7'-11"	6'-11"	6'-2"	5'-7"	5'-2"
145.0	6'-5"	5'-1"	7'-10"	6'-9"	6'-1"	5'-6"	5'-1"
150.0	6'-4"	5'-0"	7'-8"	6'-8"	5'-11"	5'-5"	5'-0"
155.0	6'-2"	4'-11"	7'-7"	6'-6"	5'-10"	5'-4"	4'-11"
160.0	6'-1"	4'-10"	7'-5"	6'-5"	5'-9"	5'-3"	4'-10"

Approved as complying with the Florida Building Code
Date JANUARY 11 2007
NOA# 05-1005.01
Miami Dade Product Control Division
By

F.B.C. (High Velocity Hurricane Zone)

NOV 1 7 2005

P.E. SEAL/SIGNATURE/DATE

© 2005 TILTECO INC.

TILTECO INC.
TILLIT TESTING & ENGINEERING COMPANY
6355 N.W. 36th. St., Ste. 305, VIRGINIA GARDENS, Fl. 33166
Phone : (305)871-1530 . Fax : (305)871-1531
e-mail: tilteco@aol.com
EB-0006719
WALTER A. TILLIT Jr. P. E.
FLORIDA Lic. # 44167

EUSEC 2004 ROLL-UP SHUTTER

EUROLL SERVICE BV
PATRONSWEG 5
3892 DA ZEEWOLDE, NETHERLANDS

REV. No	DESCRIPTION	DATE	REV. No	DESCRIPTION	DATE
1	GENERAL	7/28/06	3		
2			4		

DRAWN BY S.M.

1/20/05 DATE

05-015 DRAWING No

SHEET 12 OF 13

MULLION LOADING CHART

MAXIMUM DESIGN PRESSURE RATING "W" (p. s. f.) AND CORRESPONDING MAXIMUM SPAN "L"(Ft) FOR A GIVEN TYPE OF MULLION AND MULLION SPACING (Ft.).

(USE MAXIMUM VALUES BETWEEN POSITIVE AND NEGATIVE LOADS)

MAXIMUM DESIGN LOAD "W" (p.s.f.)	(M) TYPE 1 MULLION 3" x 4" x .125"				(N) TYPE 2 MULLION 4" x 4" x .250"				(O) TYPE 3 MULLION 4" x 6" x .250"					
	MULLION SPACING				MULLION SPACING				MULLION SPACING					
	≤ 4'-0"	4' TO 5'	5' TO 6'	6' TO 8'	≤ 4'-0"	4' TO 5'	5' TO 6'	6' TO 8'	≤ 4'-0"	4' TO 5'	5' TO 6'	6' TO 8'	8' TO 10'	10' TO 12'
40.0 OR LESS	9'-0"	8'-4"	7'-10"	8'-2"	11'-9"	10'-11"	10'-3"	10'-9"	14'-9"	14'-9"	14'-3"	14'-9"	13'-10"	13'-0"
45.0	8'-8"	8'-0"	7'-7"	7'-10"	11'-4"	10'-6"	9'-11"	10'-4"	14'-9"	14'-7"	13'-8"	14'-4"	13'-3"	12'-6"
50.0	8'-4"	7'-9"	7'-3"	7'-7"	10'-11"	10'-2"	9'-7"	10'-0"	14'-9"	14'-1"	13'-3"	13'-10"	12'-10"	12'-1"
55.0	8'-1"	7'-6"	7'-1"	7'-4"	10'-7"	9'-10"	9'-3"	9'-8"	14'-8"	13'-7"	12'-10"	13'-4"	12'-5"	11'-8"
60.0	7'-10"	7'-3"	6'-10"	7'-2"	10'-3"	9'-7"	9'-0"	9'-5"	14'-3"	13'-3"	12'-5"	13'-0"	12'-1"	11'-4"
65.0	7'-8"	7'-1"	6'-8"	7'-0"	10'-0"	9'-4"	8'-9"	9'-2"	13'-11"	12'-11"	12'-2"	12'-8"	11'-9"	11'-1"
70.0	7'-5"	6'-11"	6'-6"	6'-10"	9'-9"	9'-1"	8'-6"	8'-11"	13'-7"	12'-7"	11'-10"	12'-4"	11'-5"	10'-9"
75.0	7'-3"	6'-9"	6'-4"	6'-8"	9'-7"	8'-10"	8'-4"	8'-8"	13'-3"	12'-3"	11'-7"	12'-1"	11'-2"	10'-6"
80.0	7'-2"	6'-7"	6'-3"	6'-6"	9'-4"	8'-8"	8'-2"	8'-6"	12'-11"	12'-0"	11'-4"	11'-10"	10'-11"	10'-4"
85.0	7'-0"	6'-6"	6'-1"	6'-4"	9'-2"	8'-6"	8'-0"	8'-4"	12'-8"	11'-9"	11'-1"	11'-7"	10'-9"	10'-1"
90.0	6'-10"	6'-4"	6'-0"	6'-3"	9'-0"	8'-4"	7'-10"	8'-2"	12'-5"	11'-7"	10'-11"	11'-4"	10'-6"	9'-11"
95.0	6'-9"	6'-3"	5'-10"	6'-2"	8'-10"	8'-2"	7'-9"	8'-1"	12'-3"	11'-4"	10'-8"	11'-2"	10'-4"	9'-9"
100.0	6'-7"	6'-2"	5'-9"	6'-0"	8'-8"	8'-1"	7'-7"	7'-11"	12'-0"	11'-2"	10'-6"	10'-11"	10'-2"	9'-7"
105.0	6'-6"	6'-1"	5'-7"	5'-11"	8'-6"	7'-11"	7'-6"	7'-9"	11'-10"	11'-0"	10'-4"	10'-9"	–	–
110.0	6'-5"	5'-11"	5'-5"	5'-10"	8'-5"	7'-10"	7'-4"	7'-8"	11'-8"	10'-10"	10'-2"	10'-7"	–	–
115.0	6'-4"	5'-10"	5'-4"	5'-8"	8'-3"	7'-8"	7'-3"	7'-7"	11'-6"	10'-8"	10'-0"	10'-5"	–	–
120.0	6'-3"	5'-9"	5'-3"	5'-7"	8'-2"	7'-7"	7'-2"	7'-5"	11'-4"	10'-6"	9'-11"	10'-4"	–	–
125.0	6'-2"	5'-7"	5'-1"	5'-5"	8'-1"	7'-6"	7'-0"	7'-4"	11'-2"	10'-4"	9'-9"	10'-2"	–	–
130.0	6'-1"	5'-6"	5'-0"	5'-4"	7'-11"	7'-5"	6'-11"	7'-3"	11'-0"	10'-3"	9'-8"	10'-0"	–	–
135.0	6'-0"	5'-5"	4'-11"	5'-3"	7'-10"	7'-3"	6'-10"	7'-2"	10'-11"	10'-1"	9'-6"	9'-11"	–	–
140.0	5'-11"	5'-3"	4'-10"	5'-2"	7'-9"	7'-2"	6'-9"	7'-1"	10'-9"	10'-0"	9'-5"	9'-10"	–	–
145.0	5'-10"	5'-2"	4'-9"	5'-1"	7'-8"	7'-1"	6'-8"	7'-0"	10'-7"	9'-10"	9'-3"	9'-8"	–	–
150.0	5'-9"	5'-1"	4'-8"	5'-0"	7'-7"	7'-0"	6'-7"	6'-11"	10'-6"	9'-9"	9'-2"	9'-7"	–	–
155.0	5'-7"	5'-0"	4'-7"	4'-11"	7'-6"	7'-0"	6'-7"	6'-10"	10'-5"	9'-8"	9'-1"	9'-6"	–	–
160.0	5'-6"	4'-11"	4'-6"	4'-10"	7'-5"	6'-11"	6'-6"	6'-9"	10'-3"	9'-7"	9'-0"	9'-4"	–	–

NOTES : REFER TO ELEVATIONS ON SHEET 2 OF 13

1-. FOR MULLIONS INSTALLED W/O STORM BARS

A) MULLION SPACING SHALL BE SUCH THAT MAXIMUM SLAT SPAN SHALL NOT BE EXCEEDED

2-. FOR MULLIONS INSTALLED W/ STORM BARS & HEADERS

A) MULLION SPACING SHALL BE SUCH THAT MAXIMUM HEADER SPAN SHALL NOT BE EXCEEDED

B) STORM BAR SPACING SHALL BE SUCH THAT MAXIMUM SLAT SPAN SHALL NOT BE EXCEEDED

Approved as complying with the Florida Building Code
Date JANUARY 11 2007
NOA# 05-1005.01
Miami Dade Product Control Division
By

F.B.C. (High Velocity Hurricane Zone)

NOV 17 2006
P.E. SEAL/SIGNATURE/DATE

© 2005 TILTECO INC.

TILTECO INC.
TILLIT TESTING & ENGINEERING COMPANY
6355 N.W. 36th. St., Ste. 305, VIRGINIA GARDENS, Fl. 33166
Phone : (305)871-1530 . Fax : (305)871-1531
e-mail: tilteco@aol.com
EB-0006719
WALTER A. TILLIT Jr. P. E.
FLORIDA Lic. # 44167

EUSEC 2004 ROLL-UP SHUTTER

EUROLL SERVICE BV
PATRONSWEG 5
3892 DA ZEEWOLDE, NETHERLANDS

REV. No	DESCRIPTION	DATE	REV. No	DESCRIPTION	DATE
1	GENERAL	7/28/06	3		
2			4		

DRAWN BY S.M.
1/20/05 DATE
05-015 DRAWING No
SHEET 13 OF 13