MIAMI-DADE COUNTY
BUILDING CODE COMPLIANCE OFFICE (BCCO)
PRODUCT CONTROL DIVISION

MIAMI-DADE COUNTY, FLORIDA
METRO-DADE FLAGLER BUILDING

140 WEST FLAGLER STREET, SUITE 1603
MIAMI, FLORIDA 33130-1563
(305) 375-2901 FAX (305) 375-2908
www.miamidade.gov

NOTICE OF ACCEPTANCE (NOA)

Southern Metal Products, LLC
450 W, McNab Road
Ft. Lauderdale, FL 33309

SCOPE:
This NOA is being issued under the applicable rules and regulations governing the use of construction materials. The documentation submitted has been reviewed by Miami-Dade County Product Control Division and accepted by the Board of Rules and Appeals (BORA) to be used in Miami Dade County and other areas where allowed by the Authority Having Jurisdiction (AHJ).

This NOA shall not be valid after the expiration date stated below. The Miami-Dade County Product Control Division (In Miami Dade County) and/or the AHJ (in areas other than Miami Dade County) reserve the right to have this product or material tested for quality assurance purposes. If this product or material fails to perform in the accepted manner, the manufacturer will incur the expense of such testing and the AHJ may immediately revoke, modify, or suspend the use of such product or material within their jurisdiction. BORA reserves the right to revoke this acceptance, if it is determined by Miami-Dade County Product Control Division that this product or material fails to meet the requirements of the applicable building code.

This product is approved as described herein, and has been designed to comply with the High Velocity Hurricane Zone of the Florida Building Code.

DESCRIPTION: **Standard Aluminum Accordion Shutter**

APPROVAL DOCUMENT: Drawing No. 05-427, titled "Standard Accordion Shutter", sheets 1 through 6 of 6, prepared by Thornton- Tomasetti Group, signed and sealed by J. W. Knezevich, P.E., dated October 10, 2005, last revision #1, dated August 17, 2006, bearing the Miami-Dade County Product Control Revision stamp with the Notice of Acceptance number and expiration date by the Miami-Dade County Product Control Division.

MISSILE IMPACT RATING: **Large and Small Missile Impact**

LABELING: Each unit shall bear a permanent label with the manufacturer's name or logo, city, state and the following statement: "Miami-Dade County Product Control Approved", unless otherwise noted herein.

RENEWAL of this NOA shall be considered after a renewal application has been filed and there has been no change in the applicable building code negatively affecting the performance of this product.

TERMINATION of this NOA will occur after the expiration date or if there has been a revision or change in the materials, use, and/or manufacture of the product or process. Misuse of this NOA as an endorsement of any product, for sales, advertising or any other purposes shall automatically terminate this NOA. Failure to comply with any section of this NOA shall be cause for termination and removal of NOA.

ADVERTISEMENT: The NOA number preceded by the words Miami-Dade County, Florida, and followed by the expiration date may be displayed in advertising literature. If any portion of the NOA is displayed, then it shall be done in its entirety.

INSPECTION: A copy of this entire NOA shall be provided to the user by the manufacturer or its distributors and shall be available for inspection at the job site at the request of the Building Official.

This NOA **revises NOA # 02-0531.03** and consists of this page 1, evidence submitted pages E-1, E-2, & E-3 as well as approval document mentioned above.

The submitted documentation was reviewed by **Helmy A. Makar, P.E.**

Helmy A. Makar
09/07/2006

NOA No 05-1013.01
Expiration Date: 01/11/2007
Approval Date: 09/07/2006

Southern Metal Products, LLC

NOTICE OF ACCEPTANCE: EVIDENCE SUBMITTED

1. EVIDENCE SUBMITTED UNDER PREVIOUS APPROVAL # 95-0607.03

A. DRAWINGS

1. *Drawing No. 95-207, "Standard Accordion Shutter" Sheets 1 thru 6 of 6, prepared by Knezevich & Associates, Inc., dated 05/05/95, revised on 10/16/95, signed and sealed by V.J. Knezevich, P.E.*
2. *Die Drawing No. 838735 Blade prepared by Easco Aluminum dated 11/14/93.*

B. TESTS

1. *Test report on (1) Uniform Static Air Pressure Test Loading, per PA 202-94, (2) Large Missile Impact Test, per PA 201-94, and (3) Cyclic Loading Wind Pressure Test per PA 203-94 of an aluminum accordion shutter, prepared by Construction Testing Laboratory, Inc., Report # CTC-95-012, dated 5/15/95, signed & sealed by Christopher G. Tyson, P.E.*

C. CALCULATIONS

1. *Comparative analysis and anchor calculations dated 6/19/95, revised on 10/25/95, pages 1 to 22 of 22 prepared by Knezevich & Associates, Inc., signed and sealed by V.J. Knezevich, P.E.*

D. MATERIAL CERTIFICATIONS

1. *Mill Certified Test Reports issued by Benada Aluminum dated 01/26/95 with chemical composition and mechanical properties of the Blade, Part No. (Die No. 3626) using aluminum alloy 6063-T5.*
2. *Tensile Test Report No. 70-02-94-220, prepared by ATEC Associates, Inc., dated 08/29/94, for specimen S1032, signed and sealed by Peter G. Read, P.E.*
3. *Tensile Test Report No. 5DM-916, prepared by QC Metallurgical Inc., dated April 28, 1995 for 3 samples CTC 95-012, CTC 95-014, CTC 95-015, signed & sealed by Frank Grate, P.E.*

2. EVIDENCE SUBMITTED UNDER PREVIOUS APPROVAL # 98-0709.07

A. DRAWINGS

1. *Drawing No. 98-126, titled* "Standard Accordion Shutter", prepared by Knezevich & Associates, Inc., dated June 12, 1998, revision #2 dated November 5, 1998, sheets 1 through 6 of 6, *signed and sealed by V.J. Knezevich, P.E.*

B. TESTS

1. *Test report on: (1) Uniform Static Air Pressure Test Loading, per PA 202-94, (2) Large Missile Impact Test, per PA 201-94, and (3) Cyclic Loading Wind Pressure Test per PA 203-94 of an aluminum accordion shutter, prepared by Construction Testing Corporation, Report No. CTC-98-015, dated 03/25/98, signed and sealed by Christopher G. Tyson, P.E.*

Helmy a. Makar, P.E.
Product Control Examiner
NOA No 05-1013.01
Expiration Date: 01/11/2007
Approval Date: 09/07/2006

NOTICE OF ACCEPTANCE: EVIDENCE SUBMITTED

C. CALCULATIONS

1. *Comparative analysis and anchor calculations dated 06/30/98, pages 1 to 23 of 23 prepared by Knezevich & Associates, Inc., signed and sealed by V.J. Knezevich, P.E.*
2. Separation from glass *calculations dated 11/09/98, page 1 of 1, prepared by Knezevich & Associates, Inc., signed and sealed by V.J. Knezevich, P.E.*

D. MATERIAL CERTIFICATIONS

1. *Mill Certified Test Reports issued by Benada Aluminum of Florida, dated 10/12/97, with chemical composition and mechanical properties of the Blade.*
2. *Tensile Test Report No. CTL –212D, prepared by Certified Testing Laboratories, dated 03/24/98, for specimen report #98-015, signed and sealed by Ramesh Patel, P.E.*

3. EVIDENCE SUBMITTED UNDER PREVIOUS APPROVAL # 01-1002.04

A. DRAWINGS

1. *None.*

B. TESTS

1. *None.*

C. CALCULATIONS

1. *None.*

D. MATERIAL CERTIFICATIONS

1. *None.*

4. EVIDENCE SUBMITTED UNDER PREVIOUS APPROVAL # 02-0531.03

A. DRAWINGS

See NOA 02-0531.03 (General Notes)

B. TESTS

See NOA 01-1002.04

C. CALCULATIONS

See NOA 01-1002.04

D. MATERIAL CERTIFICATIONS

See NOA 01-1002.04

E. STATEMENTS

See NOA 01-1002.04

Helmy a. Makar, P.E.
Product Control Examiner
NOA No 05-1013.01
Expiration Date: 01/11/2007
Approval Date: 09/07/2006

NOTICE OF ACCEPTANCE: EVIDENCE SUBMITTED

F. OTHER
NOA 01-1002.04

5. NEW EVIDENCE SUBMITTED

A. DRAWINGS

1. *Drawing No. 05-427, titled "Standard Accordion Shutter", sheets 1 through 6 of 6, prepared by Thornton- Tomasetti Group, signed and sealed by J. W. Knezevich, P.E., dated October 10, 2005, last revision #1, dated August 17, 2006.*

B. TESTS

1. *None.*

C. CALCULATIONS

1. *Anchor calculations, pages 1 through 29 of 29, prepared by Thornton-Tomasetti* Group, dated August 16, 2005, signed and sealed by J. W. Knezevich, P.E.

D. QUALITY ASSURANCE

1. *By Miami-Dade County Building Code Compliance Office.*

E. MATERIAL CERTIFICATIONS

1. *None.*

Helmy a. Makar, P.E.
Product Control Examiner
NOA No 05-1013.01
Expiration Date: 01/11/2007
Approval Date: 09/07/2006

09/01/05 11:24
08/17/2006 04:32:53pm NWang
Print Information: P:\FL1\Projects\KK5427.00\Drawings\R1-sub\05-427-01.dwg

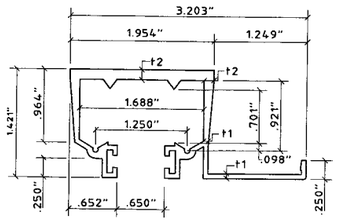

t1	.062"
t2	.109"

1 HEADER-CLG. MOUNTED

SCALE: HALF SIZE

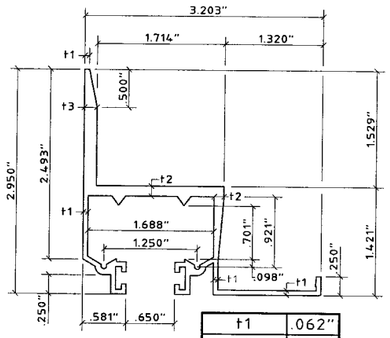

t1	.062"
t2	.109"
t3	.137"

2 HEADER-WALL MOUNTED

SCALE: HALF SIZE

× HEADER MAY BE INVERTED AND USED AT BOTTOM AS A SUBSTITUTE FOR PIECE 4

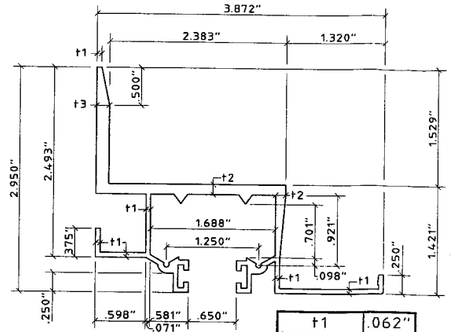

t1	.062"
t2	.109"
t3	.137"

3 ALT. HEADER-WALL MOUNTED

SCALE: HALF SIZE

× HEADER MAY BE USED AS AN ALT. PIECE 2 TYPICAL TOP OR BOTTOM.

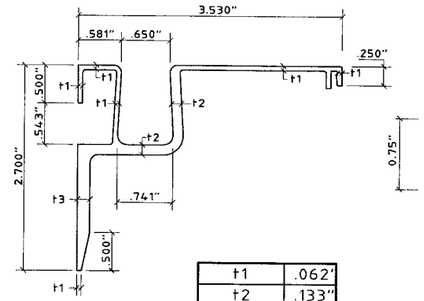

t1	.062'
t2	.133"
t3	.169"

4 SILL-WALL MOUNTED

SCALE: HALF SIZE

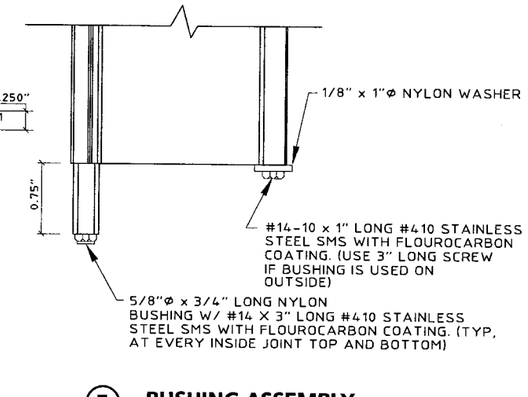

5 BUSHING ASSEMBLY

SCALE: HALF SIZE

GENERAL NOTES:

1. THESE APPROVAL DOCUMENTS REPRESENT A SHUTTER SYSTEM ANALYZED WITH THE PROVISION SET FOR THE ISSUANCE OF A NOTICE OF ACCEPTANCE (NOA) BY MIAMI-DADE COUNTY PRODUCT CONTROL DIVISION FOR THE HIGH VELOCITY HURRICANE ZONE (HVHZ) OF THE FLORIDA BUILDING CODE 2004.
2. NO INCREASE IN ALLOWABLE STRESS HAS BEEN USED IN THE DESIGN OF THIS PRODUCT. WIND LOAD DURATION FACTOR Cd = 1.6 WAS USED FOR WOOD LAG SCREW DESIGN.
3. DETERMINE THE POSITIVE AND NEGATIVE DESIGN LOADS TO USE WHEN REFERENCING THESE DOCUMENTS IN ACCORDANCE WITH THE GOVERNING CODE AND GOVERNING WIND VELOCITY. FOR WIND LOAD CALCULATIONS IN ACCORDANCE WITH ASCE 7-02, A DIRECTIONALITY FACTOR OF Kd = 0.85 SHALL BE USED.
4. THESE APPROVAL DOCUMENTS ARE GENERIC AND DO NOT INCLUDE INFORMATION FOR SITE-SPECIFIC APPLICATION OF THIS SHUTTER SYSTEM.
5. USE OF THESE APPROVAL DOCUMENTS SHALL COMPLY WITH CHAPTER 61G15-23 OF THE FLORIDA ADMINISTRATIVE CODE.
6. THESE APPROVAL DOCUMENTS, ARE SUITABLE TO BE APPLIED BY THE CONTRACTOR PROVIDED THE CONTRACTOR DOES NOT DEVIATE FROM THE CONDITIONS DETAILED HEREIN AND THE CONTRACTOR VERIFIES THAT THE EXISTING STRUCTURE DOES NOT DEVIATE IN EITHER FORM OR MATERIAL FROM THE STRUCTURAL SUBSTRATES DETAILED HEREIN.
7. ANY MODIFICATIONS OR ADDITIONS TO THESE APPROVAL DOCUMENTS WILL VOID THE APPROVAL DOCUMENTS.
8. WHEN THE SITE CONDITIONS DEVIATE FROM THESE APPROVAL DOCUMENTS, THE BUILDING OFFICIAL MAY ELECT ONE OF THE FOLLOWING OPTIONS:
   A) REQUIRE THAT SITE SPECIFIC DOCUMENTS BE PREPARED, SIGNED, DATED AND SEALED BY A LICENSED ENGINEER OR REGISTERED ARCHITECT, WHICH DETAIL AND JUSTIFY THE DEVIATION. SAID DOCUMENTS SHALL BE SUBMITTED TO THE PRODUCT ENGINEER FOR REVIEW AS A CONDITION TO THE BUILDING OFFICIAL GRANTING HIS/HER APPROVAL.
   B) REQUIRE THAT A ONE-TIME SITE SPECIFIC APPROVAL BE APPLIED FOR AND SECURED FROM THE MIAMI-DADE COUNTY PRODUCT CONTROL DIVISION

   WHEN THE SITE CONDITION DEVIATIONS OCCUR WITHIN THE HIGH VELOCITY HURRICANE ZONE AREAS ONLY OPTION "B" SHALL BE ACCEPTED BY THE BUILDING OFFICIAL.
9. EACH SHUTTER ASSEMBLY SHALL BE PERMANENTLY LABELED AS FOLLOWS:

   BHPCO
   FORT LAUDERDALE, FLORIDA
   MIAMI-DADE COUNTY PRODUCT CONTROL APPROVED
10. ALL SHUTTERS SHALL HAVE A LOCKING MECHANISM AT CENTER OR SIDE CLOSURE WITHIN 18" OF CENTER (VERT.). LOCKING MECHANISM SHALL BE LOCKED TO PROVIDE HURRICANE PROTECTION.
11. STORM SHUTTER EXTRUSIONS SHOWN SHALL BE 6063-T6 ALUMINUM ALLOY, U.O.N.
12. ALL BOLTS AND WASHERS SHALL BE GALVANIZED OR STAINLESS STEEL WITH A MINIMUM TENSILE STRENGTH OF 33 K.S.I., U.O.N. POP RIVETS SHALL BE 3/16" DIA. 5052 ALUMINUM ALLOY.
13. TOP AND BOTTOM DETAILS MAY BE INTERCHANGED AS FIELD CONDITIONS REQUIRE.
14. FLOOR TRACKS MAY BE REMOVABLE AT NON-STACKING LOCATIONS. USE REMOVABLE ANCHORS SUCH AS POWERS CALK-IN ANCHORS.

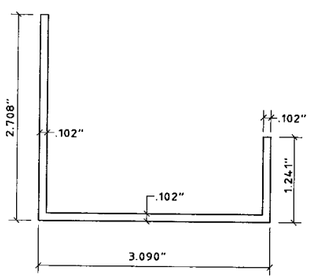

6 ADJ. SILL-BOT.

SCALE: HALF SIZE

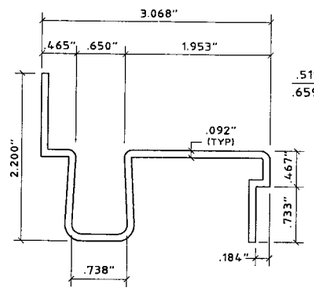

7 ADJ. SILL-TOP

SCALE: HALF SIZE

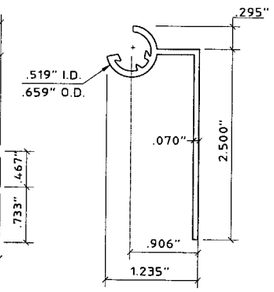

8 90° END SLAT

SCALE: HALF SIZE
6063-T5 ALLOY

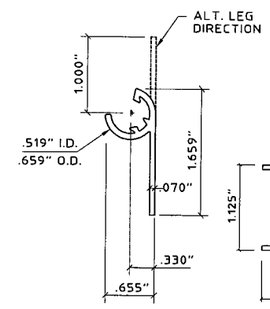

9 FLAT END SLAT

SCALE: HALF SIZE
6063-T5 ALLOY

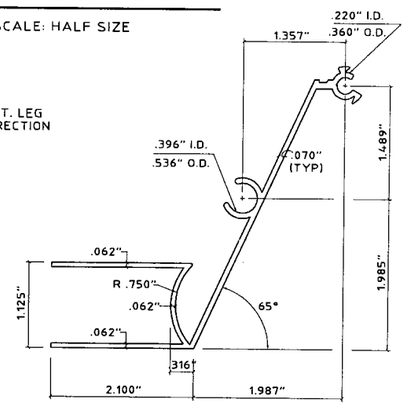

10 FEMALE LOCK-SLAT

SCALE: HALF SIZE
6005-T5 ALLOY

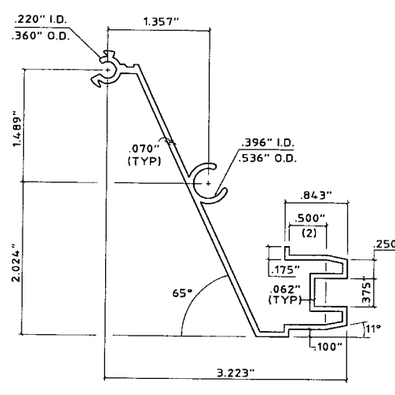

11 MALE LOCK SLAT

SCALE: HALF SIZE
6005-T5 ALLOY

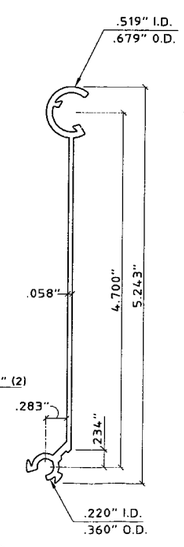

12 TYP. SLAT

SCALE: HALF SIZE
6005-T5 ALLOY

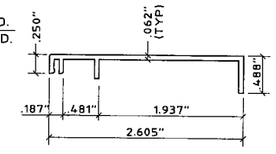

13 RAIN GUARD

SCALE: HALF SIZE
6063-T5 ALLOY

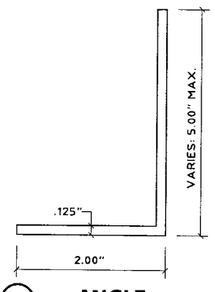

14 ANGLE

SCALE: HALF SIZE

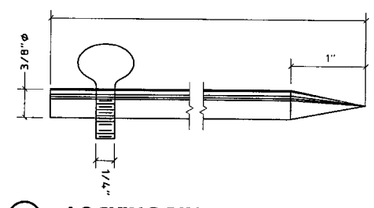

15 LOCKING PIN

SCALE: HALF SIZE

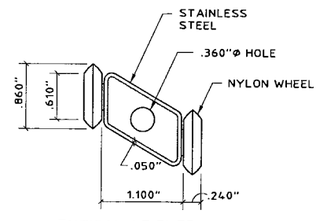

× TYPICAL AT EVERY OTHER INSIDE JOINT AT TOP

16 ROLLER ASSEMBLY

SCALE: HALF SIZE

PRODUCT REVISED
as complying with the Florida
Building Code
Acceptance No. 05-1013.01
Expiration Date 01/11/2007
By Helmy H. Mekhael
Miami Dade Product Control
Division

Thornton-Tomasetti Group
330 N. Andrews Ave., Suite 450 • Ft. Lauderdale, FL 33301
Tel. (954) 522-3690 • Fax (954) 522-3691 • COA # 7519
Website: www.TheTTGroup.com

Copyright © 2005 Thornton-Tomasetti Group, Inc.

STANDARD ACCORDION SHUTTER
SOUTHERN METAL PRODUCTS, LLC - D.B.A.
450 West McNab Road
Ft. Lauderdale, FL 33309
1-800-HURRICANE
BROWARD HURRICANE PANEL

J.W. Knezevich
Professional Engineer
Fl. License No.: PE 0041961

AUG 17 2006

revisions

no	date	by	description
0	10/10/05	ZL	PREVIOUSLY DRAWING NO. 98-126
1	08/17/06	NW	COUNTY COMMENTS

date	10/10/2005
scale	AS NOTED
drawn by	MCR
design by	ZL
checked by	JWK
drawing no.	05-427

sheet 1 of 6

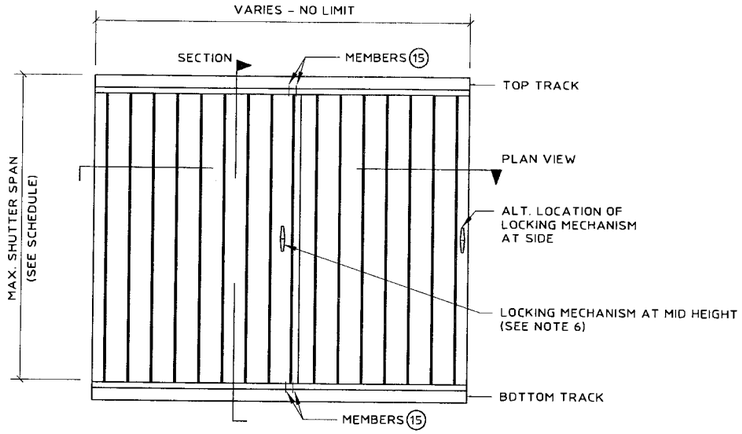

(A) TYPICAL ELEVATION

N.T.S.

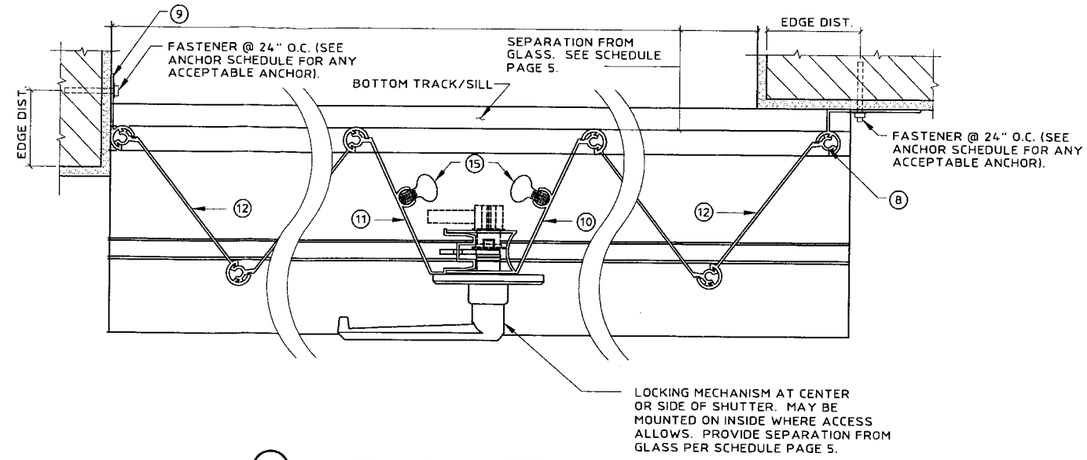

(B) TYPICAL PLAN VIEW

SCALE: 3" = 1'-0"

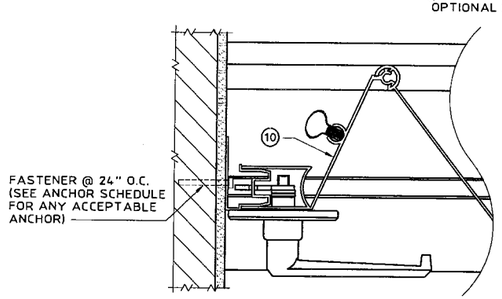

(C) SIDE CLOSURE DETAIL

SCALE: 3" = 1'-0"

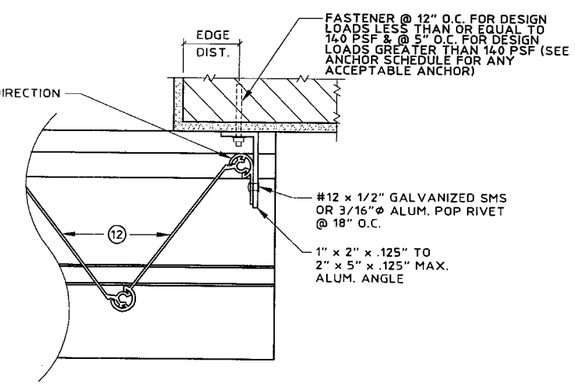

(D) ALT. CLOSURE DETAIL

SCALE: 3" = 1'-0"

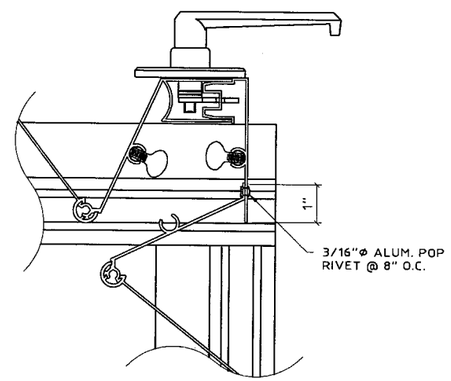

(E) INSIDE CORNER CLOSURE DETAIL

SCALE: 3" = 1'-0"

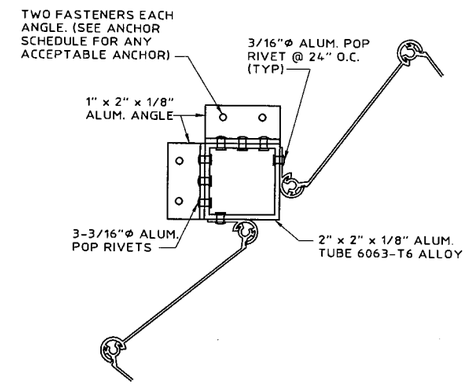

(F) CORNER CLOSURE DETAIL

SCALE: 3" = 1'-0"

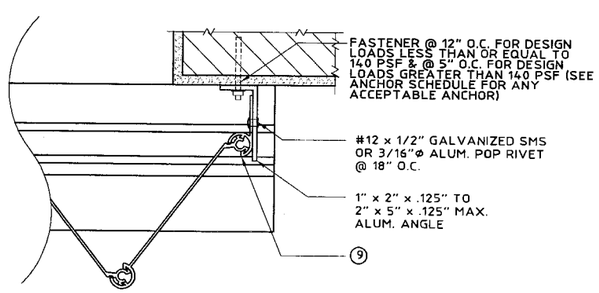

(G) ALT. CLOSURE DETAIL

SCALE: 3" = 1'-0"

PRODUCT REVISED
as complying with the Florida
Building Code
Acceptance No. 05-1013.01
Expiration Date 01/11/2007
By
Miami Dade Product Control
Division

Thornton-Tomasetti Group
330 N. Andrews Ave., Suite 450 • Ft. Lauderdale, FL 33301
Tel. (954) 522-3690 • Fax (954) 522-3691 • COA # 7519
Website: www.TheTTGroup.com

Copyright © 2005 Thornton-Tomasetti Group, Inc.

STANDARD ACCORDION SHUTTER

SOUTHERN METAL PRODUCTS, LLC - D.B.A.

ALL BROWARD HURRICANE PANEL
450 West McNab Road
Ft. Lauderdale, FL 33309
1-800-HURRICANE

J.W. Knezevich
Professional Engineer
FL License No.: PE 0041961

AUG 17 2006

revisions

no	date	by	description
0	10/10/05	ZL	PREVIOUSLY DRAWING NO. 98-126
1	08/17/06	NW	COUNTY COMMENTS

date 10/10/2005
scale AS NOTED
drawn by MCR
design by ZL
checked by JWK
drawing no. 05-427
sheet 2 of 6

Print Information: P:\FL1\Projects\KK5427.00\Drawings\R1-sub\05-427-02.dwg NWang 08/17/2006 04:33:01pm 09/01/05 14:32

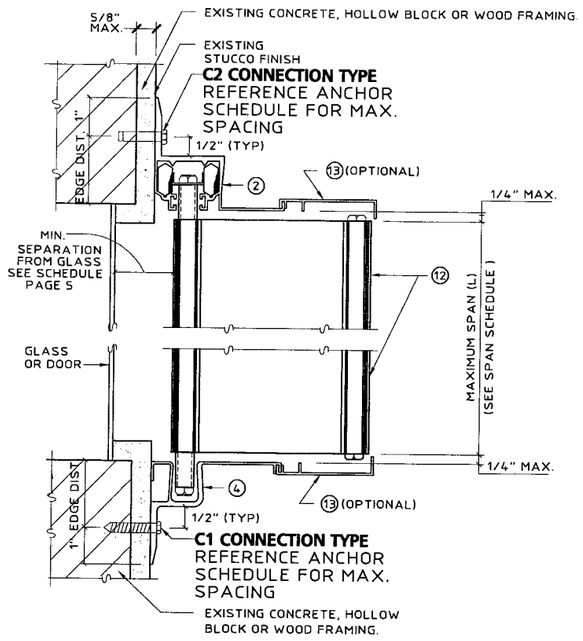

(A) WALL MOUNT SECTION

SCALE : 3"= 1'- 0"

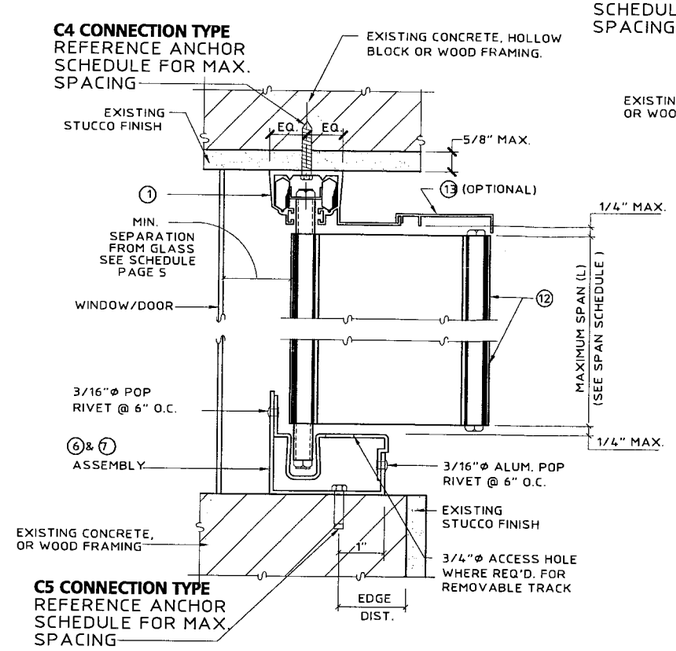

(B) CEILING/INSIDE MOUNT SECTION

SCALE : 3"= 1'- 0"

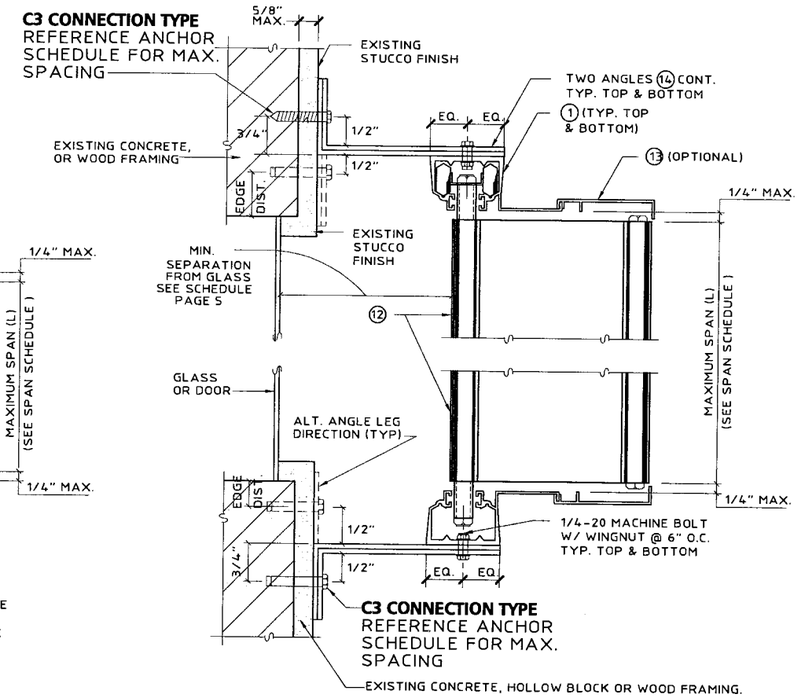

(C) BUILD-OUT MOUNT SECTION

SCALE : 3"= 1'- 0"

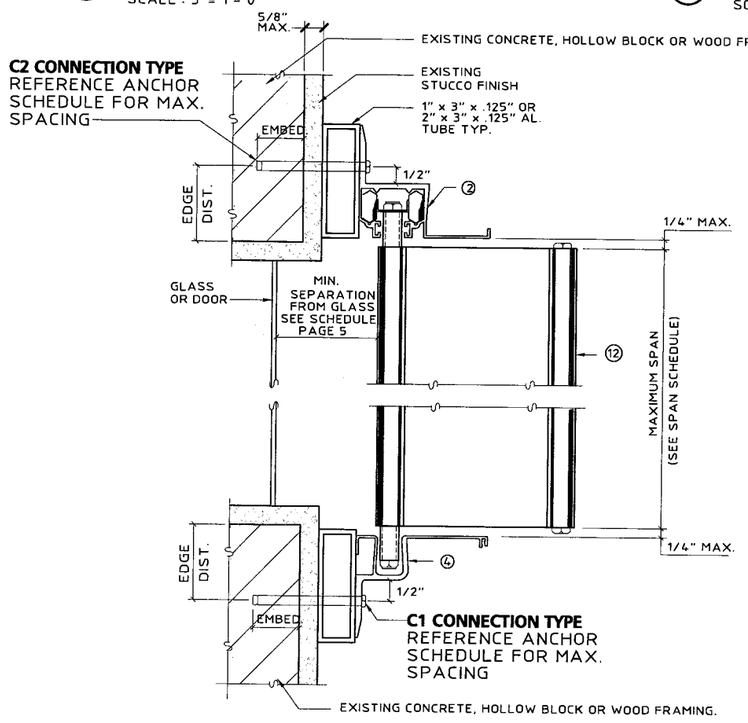

(D) WALL MOUNT SECTION

SCALE : 3" = 1'-0"

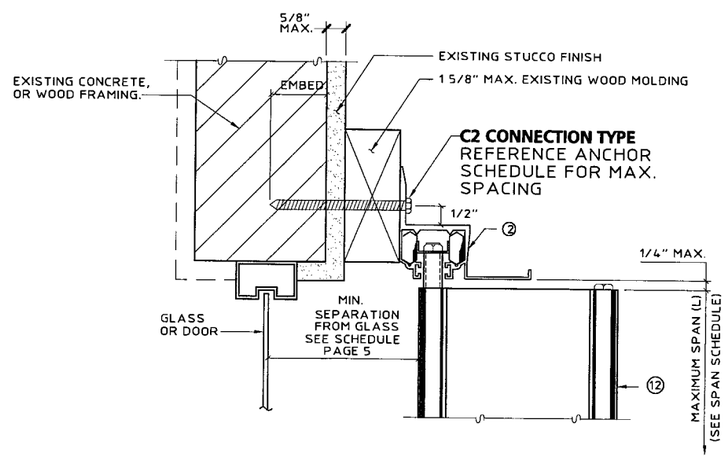

(E) WALL MOUNT SECTION

SCALE : 3" = 1'-0"

PRODUCT REVISED
as complying with the Florida
Building Code
Acceptance No. 05-1013.01
Expiration Date 01/11/2007
By Helmy A. Mo
Miami Dade Product Control
Division

Thornton-Tomasetti Group
330 N. Andrews Ave. Suite 450 • Ft. Lauderdale, FL 33301
Tel. (954) 522-3690 • Fax (954) 522-3691 • COA # 7519
Website: www.TheTTGroup.com

Copyright © 2005 Thornton-Tomasetti Group, Inc.

STANDARD ACCORDION SHUTTER

SOUTHERN METAL PRODUCTS, LLC - D.B.A.

ALL BROWARD HURRICANE PANEL
450 West McNab Road
Ft. Lauderdale, FL 33309
1-800-HURRICANE

J.W. Knezevich
Professional Engineer
FL License No.: PE 0041961

AUG 17 2006

revisions

no	date	by	description
0	10/10/05	ZL	PREVIOUSLY DRAWING NO. 98-126
1	08/17/06	NW	COUNTY COMMENTS

date 10/10/2005
scale AS NOTED
drawn by MCR
design by ZL
checked by JWK
drawing no. 05-427
sheet 3 of 6

Print Information: P:\FL1\Projects\KK5427.00\Drawings\R1-sub\05-427-03.dwg NWang 08/17/2006 04:33:09pm 09/01/05 15:05

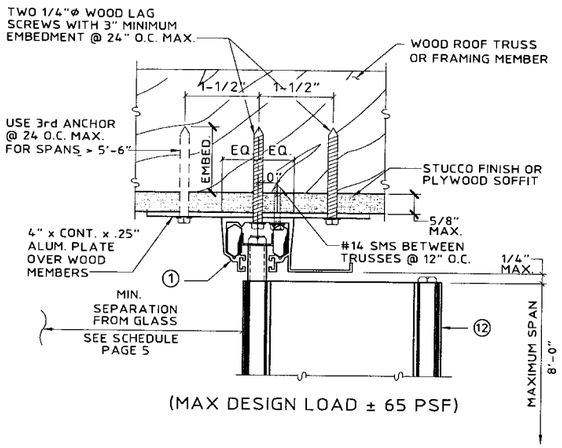

(MAX DESIGN LOAD ± 65 PSF)

(F) SOFFIT CONNECTION DETAIL

SCALE : 3" = 1'-0"

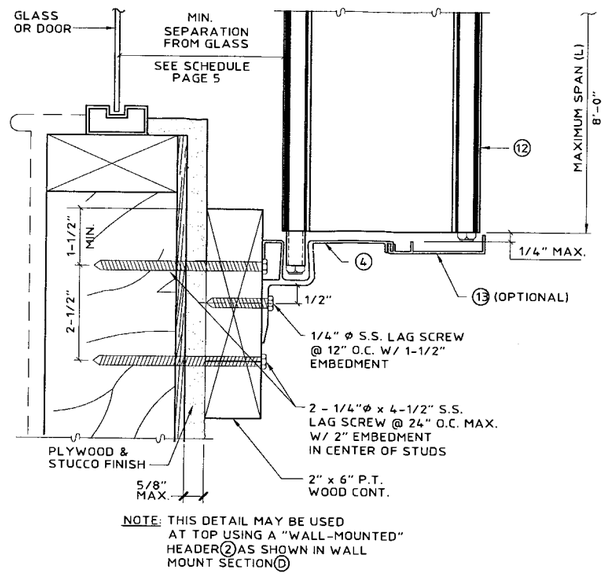

NOTE: THIS DETAIL MAY BE USED AT TOP USING A "WALL-MOUNTED" HEADER (2) AS SHOWN IN WALL MOUNT SECTION (D)

(MAX DESIGN LOAD ± 75 PSF)

(G) ALT. WALL MOUNT SECTION

SCALE : 3"= 1'- 0"

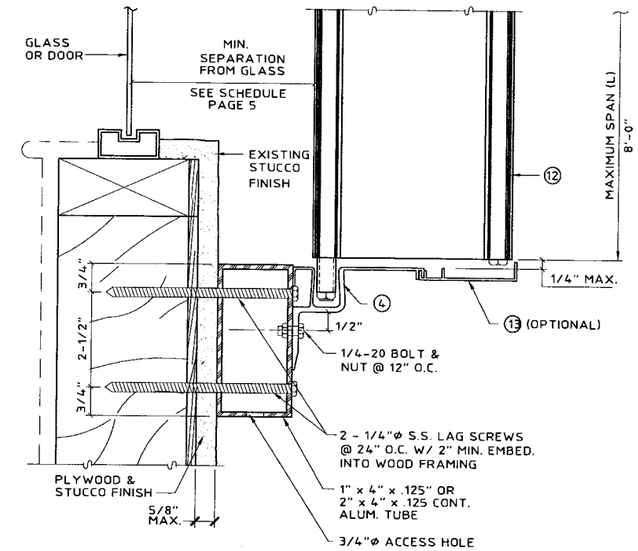

NOTE: THIS DETAIL MAY BE USED AT TOP USING A "WALL-MOUNTED" HEADER (2) AS SHOWN IN WALL MOUNT SECTION (D)

(MAX DESIGN LOAD ± 75 PSF)

(H) ALT. WALL MOUNT SECTION

SCALE : 3"= 1'- 0"

PRODUCT REVISED
as complying with the Florida
Building Code
Acceptance No 05-1013.01
Expiration Date 01/11/2007
By [signature]
Miami Dade Product Control
Division

Thornton-Tomasetti Group
330 N. Andrews Ave., Suite 450 • Ft. Lauderdale, FL 33301
Tel. (954) 522-3690 • Fax (954) 522-3691 • COA # 7519
Website: www.TheTTGroup.com

Copyright © 2005 Thornton-Tomasetti Group, Inc.

STANDARD ACCORDION SHUTTER

SOUTHERN METAL PRODUCTS, LLC - D.B.A.
ALL BROWARD HURRICANE PANEL
450 West McNab Road
Ft. Lauderdale, FL 33309
1-800-HURRICANE

J.W. Knezevich
Professional Engineer
FL License No.: PE 0041961

AUG 17 2006

revisions

no	date	by	description
0	10/10/05	ZL	PREVIOUSLY DRAWING NO. 98-126
1	08/17/06	NW	COUNTY COMMENTS

date 10/10/2005
scale AS NOTED
drawn by MCR
design by ZL
checked by JWK
drawing no. 05-427
sheet 4 of 6

Print Information: P:\FL1\Projects\KK5427.00\Drawings\R1-sub\05-427-04.dwg NWang 08/17/2006 04:33:17pm 09/02/05 10:53

TABLE 1	MAXIMUM ALLOWABLE SPAN SCHEDULE	
DESIGN LOAD W (PSF)	ALL MOUNTING CONDITIONS INSTALLED LESS THAN OR GREATER THAN 30' ABOVE GRADE	TRAP MOUNT CONDITIONS INSTALLED GREATER THAN 30' ABOVE GRADE
	Ⓐ L max. (FT – IN)	Ⓑ L max. (FT – IN)
35.0	15 – 6	15 – 6
42.0	15 – 6	14 – 10
45.0	15 – 2	14 – 7
50.0	14 – 10	14 – 3
55.0	14 – 5	13 – 10
60.0	14 – 2	13 – 7
62.0	14 – 0	13 – 6
65.0	13 – 10	13 – 4
70.0	13 – 7	13 – 1
72.0	13 – 6	13 – 0
75.0	13 – 4	12 – 10
80.0	13 – 2	12 – 8
85.0	12 – 11	12 – 5
90.0	12 – 8	12 – 3
100.0	12 – 0	11 – 11
110.0	11 – 6	11 – 8
120.0	10 – 11	11 – 5
130.0	10 – 1	11 – 2
140.0	9 – 4	11 – 0
150.0	8 – 9	10 – 9
160.0	8 – 2	10 – 2
170.0	7 – 8	9 – 6
180.0	7 – 3	9 – 0
190.0	6 – 10	8 – 6
200.0	6 – 6	8 – 1
225.0	5 – 10	7 – 2
250.0	5 – 3	6 – 6
275.0	4 – 9	5 – 11
300.0	4 – 4	5 – 5

TABLE 2	MINIMUM SEPARATION FROM GLASS (IN)		
POSITIVE DESIGN LOAD (W) (PSF)	ACTUAL SHUTTER SPAN (FT. – IN)	MIN. SEPARATION FROM GLASS FOR INSTALLATIONS ≤30' ABOVE GRADE (INCHES)	MIN. SEPARATION FROM GLASS FOR INSTALLATIONS >30' ABOVE GRADE (INCHES)
30.0	5'-0"	2-3/8	1-1/8
	8'-0"	2-3/8	1-1/8
	11'-2"	2-3/8	1-1/2
	15'-6"	2-1/2	2-1/2
40.0	5'-0"	2-3/8	1-1/8
	8'-0"	2-3/8	1-1/4
	11'-2"	2-3/8	1-5/8
	15'-6"	3	3
50.0	5'-0"	2-3/8	1-1/8
	8'-0"	2-3/8	1-1/4
	11'-2"	2-3/8	1-3/4
	14'-10"	3	3
60.0	5'-0"	2-3/8	1-1/8
	8'-0"	2-3/8	1-1/4
	11'-2"	2-3/8	1-7/8
	14'-2"	3	3
70.0	5'-0"	2-3/8	1-1/8
	8'-0"	2-3/8	1-1/4
	11'-2"	2-3/8	2
	13'-7"	3	3
80.0	5'-0"	2-3/8	1-1/8
	8'-0"	2-3/8	1-3/8
	11'-2"	2-3/8	2-1/8
	13'-2"	3	3
90.0	5'-0"	2-3/8	1-1/8
	8'-0"	2-3/8	1-3/8
	11'-2"	2-3/8	2-1/4
	12'-8"	3	3

TABLE 2	MINIMUM SEPARATION FROM GLASS (IN)		
POSITIVE DESIGN LOAD (W) (PSF)	ACTUAL SHUTTER SPAN (FT. – IN)	MIN. SEPARATION FROM GLASS FOR INSTALLATIONS ≤30' ABOVE GRADE (INCHES)	MIN. SEPARATION FROM GLASS FOR INSTALLATIONS >30' ABOVE GRADE (INCHES)
100.0	5'-0"	2-3/8	1-1/8
	8'-0"	2-3/8	1-3/8
	11'-2"	2-3/8	2-3/8
	12'-0"	2-3/4	2-3/4
110.0	5'-0"	2-3/8	1-1/8
	8'-0"	2-3/8	1-3/8
	11'-2"	2-1/2	2-1/2
	11'-8"	3	3
120.0	5'-0"	2-3/8	1-1/8
	8'-0"	2-3/8	1-1/2
	11'-2"	2-1/2	2-5/8
	11'-5"	3	3
130.0	5'-0"	2-3/8	1-1/8
	8'-0"	2-3/8	1-1/2
	11'-2"	3	3
140.0	5'-0"	2-3/8	1-1/8
	8'-0"	2-3/8	1-1/2
	11'-0"	3	3
150.0	8'-0"	2-3/8	1-5/8
	10'-9"	3	3
160.0	10'-2"	2-3/4	2-3/4
170.0	9'-6"	2-1/2	2-1/2
180.0	9'-0"	2-3/8	2-3/8
190.0	8'-6"	2-3/8	2-1/8
200.0	8'-1"	2-3/8	2-1/8
225.0	7'-2"	2-3/8	1-7/8
275.0	5'-11"	2-3/8	1-5/8
300.0	5'-5"	2-3/8	1-5/8

NOTES:

1. ENTER TABLE 1 WITH THE HIGHER OF THE POSITIVE OR NEGATIVE DESIGN LOADS TO DETERMINE MAXIMUM ALLOWABLE SPAN.
2. ENTER TABLE 2 WITH POSITIVE DESIGN LOAD TO DETERMINE MINIMUM SEPARATION FROM GLASS.
3. FOR DESIGN LOADS BETWEEN TABULATED VALUES, USE NEXT HIGHER LOAD OR LINEAR INTERPOLATION MAY BE USED TO DETERMINE ALLOWABLE SPANS.

PRODUCT REVISED
as complying with the Florida
Building Code
Acceptance No. 05-1013.01
Expiration Date 01/11/2007
By Helena A. Melo
Miami Dade Product Control
Division

Thornton-Tomasetti Group
330 N. Andrews Ave., Suite 450 • Ft. Lauderdale, FL 33301
Tel. (954) 522-3690 • Fax (954) 522-3691 • COA # 7519
Website: www.TheTGroup.com

Copyright © 2005 Thornton-Tomasetti Group, Inc.

STANDARD ACCORDION SHUTTER
SOUTHERN METAL PRODUCTS, LLC - D.B.A.
ALL BROWARD HURRICANE PANEL
450 West McNab Road
Ft. Lauderdale, FL 33309
1-800-HURRICANE

J.W. Knezevich
Professional Engineer
FL License No.: PE 0041961

AUG 17 2006

revisions

no	date	by	description
0	10/10/05	ZL	PREVIOUSLY DRAWING NO. 98-126
1	08/17/06	NW	COUNTY COMMENTS

date 10/10/2005
scale AS NOTED
drawn by MCR
design by ZL
checked by JWK
drawing no. 05-427
sheet 5 of 6

Print Information: P:\FL1\Projects\KK5427.00\Drawings\R1-sub\05-427-05.dwg NWang 08/17/2006 04:33:25pm 09/02/05 10:56

ANCHOR SCHEDULE

FASTENER MAXIMUM SPACING (INCHES) REQUIRED FOR VARIOUS DESIGN LOADS AND SPANS

EXIST. STRUC.	ANCHOR TYPE	LOAD (W) P.S.F. MAX. (SEE NOTE 1)	MIN. 2" EDGE DISTANCE															MIN. 3" EDGE DISTANCE													
			SPANS UP TO 5'-6" (SEE NOTE 1)					SPANS UP TO 8'-0" (SEE NOTE 1)					SPANS UP TO 15'-6" (SEE NOTE 1)					SPANS UP TO 5'-6" (SEE NOTE 1)					SPANS UP TO 8'-0" (SEE NOTE 1)					SPANS UP TO 15'-6" (SEE NOTE 1)				
			CONNECTION TYPE (SEE NOTE 3)					CONNECTION TYPE (SEE NOTE 3)					CONNECTION TYPE (SEE NOTE 3)					CONNECTION TYPE (SEE NOTE 3)					CONNECTION TYPE (SEE NOTE 3)					CONNECTION TYPE (SEE NOTE 3)				
			C1	C2	C3	C4	C5	C1	C2	C3	C4	C5	C1	C2	C3	C4	C5	C1	C2	C3	C4	C5	C1	C2	C3	C4	C5	C1	C2	C3	C4	C5
CONCRETE	* 1/4"Ø POWERS CALK-IN W/ 7/8" EMBEDMENT & 1/4-20 STAINLESS STEEL MACHINE SCREW (MIN. 3,000 P.S.I. CONCRETE)	62.0	6	6	6	6	6	6	6	6	5	4	6	5	6			6	6	6	6	6	6	6	6	6	6	6	6	4	4
		72.0	6	6	6	6	6	6	6	6	4	4	6	3	6			6	6	6	6	6	6	6	6	6	6	6	4	6	3	3
		105.0	6	6	6	4	4	6	6	6	3		6		6			6	6	6	6	6	6	6	6	5	4	6	3	6	3	
		210.0	6	3	6			6		6			6		6			6	4	6	3	3	6	3	6	3		6	3	6	3	
		300.0	6		6			6		6			6		6			6	3	6	3		6	3	6	3		6	3	6	3	
	1/4"Ø ITW TAPCON W/ 1-3/4" MIN. EMBEDMENT (MIN. 3,192 P.S.I. CONCRETE)	62.0	6	6	6	6	6	6	6	6	6	6	6	6	6	4	3	6	6	6	6	6	6	6	6	6	6	6	6	6	4	4
		72.0	6	6	6	6	6	6	6	6	6	6	6	4	6	3	3	6	6	6	6	6	6	6	6	6	6	6	5	6	4	3
		105.0	6	6	6	6	6	6	6	6	4	4	6	3	6			6	6	6	6	6	6	6	6	5	5	6	3	6	3	3
		210.0	6	4	6	3	3	6	3	6			6	3	6			6	4	6	4	3	6	3	6	3	3	6	3	6	3	3
		300.0	6	3	6			6	3	6			6	3	6			6	3	6	3	3	6	3	6	3	3	6	3	6	3	3
HOLLOW CONCRETE BLOCK	* 1/4"Ø POWERS CALK-IN W/ 7/8" EMBEDMENT & 1/4-20 STAINLESS STEEL MACHINE SCREW	62.0	6	6	6	4	4	6	6	6	3	3	4		4			6	6	6	6	6	6	6	6	4	4	5		5		
		72.0	6	6	6	4	3	6	6	6			3		3			6	6	6	6	5	6	6	6	4	3	4		4		
		105.0	6	6	6			5	3	5			3		3			6	6	6	4	3	6	4	6			3		3		
		210.0	3		3			3		3			3		3			4		4			3		3			3		3		
		300.0	3		3			3		3			3		3			3		3			3		3			3		3		
	1/4"Ø ITW TAPCON W/ 1-1/4" MIN. EMBEDMENT	62.0	6	6	6	5	4	6	6	6	3	3	4		4			6	6	6	6	5	6	6	6	4	3	4		4		
		72.0	6	6	6	4	4	6	6	6	3		3		3			6	6	6	5	4	6	6	6	3	3	4		4		
		105.0	6	6	6	3		4	3	4			3		3			6	6	6	3	3	5	4	5			3		3		
		210.0	3		3			3		3			3		3			4		4			3		3			3		3		
		300.0	3		3			3		3			3		3			3		3			3		3			3		3		

ANCHOR SCHEDULE

FASTENER MAXIMUM SPACING (INCHES) REQUIRED FOR VARIOUS DESIGN LOADS AND SPANS

EXIST. STRUC.	ANCHOR TYPE	LOAD (W) P.S.F. MAX. (SEE NOTE 1)	MIN. 3/4" EDGE DISTANCE														
			SPANS UP TO 5'-6" (SEE NOTE 1)					SPANS UP TO 8'-0" (SEE NOTE 1)					SPANS UP TO 15'-6" (SEE NOTE 1)				
			CONNECTION TYPE (SEE NOTE 3)					CONNECTION TYPE (SEE NOTE 3)					CONNECTION TYPE (SEE NOTE 3)				
			C1	C2	C3	C4	C5	C1	C2	C3	C4	C5	C1	C2	C3	C4	C5
WOOD	* 7/16"Ø WOOD BUSHING W/ 5/8" MIN. EMBED. & 1/4-20 STAINLESS STEEL MACHINE SCREW	62.0	6	6	6			6	6	6			5		5		
		72.0	6	6	6			6	6	6			4		4		
		105.0	6	6	6			5	4	5			3		3		
		210.0	4		4			3		3			3		3		
		300.0	3		3			3		3			3		3		
	2" MIN. 1/4"Ø x MIN. 3" LONG LAG SCREW W/ MIN. 2" EMBED. SHEAR PARALLEL OR PERP. TO WOOD GRAIN	62.0	6	6	6	6	6	6	6	6	6	6	6	6	6	4	3
		72.0	6	6	6	6	6	6	6	6	6	6	6	6	6	3	3
		105.0	6	6	6	6	6	6	6	6	4	4	6	4	6		
		210.0	6	6	6	3	3	6	4	6			6	4	6		
		300.0	6	4	6			6	4	6			6	4	6		

ANCHOR NOTES:

1. **SPANS AND LOADS SHOWN HERE ARE FOR DETERMINING ANCHOR SPACING ONLY. ALLOWABLE STORM PANEL SPANS FOR SPECIFIC LOADS MUST BE LIMITED TO THOSE SHOWN IN TABLE 1.**
2. ENTER ANCHOR SCHEDULE BASED ON THE EXISTING STRUCTURE MATERIAL, ANCHOR TYPE AND EDGE DISTANCE. SELECT DESIGN LOAD GREATER THAN OR EQUAL TO NEGATIVE DESIGN LOAD ON SHUTTER AND SELECT SPAN GREATER THAN OR EQUAL TO SHUTTER SPAN.
3. SEE MOUNTING SECTION DETAILS FOR IDENTIFICATION OF CONNECTION TYPE.
4. EXISTING STRUCTURE MAY BE CONCRETE, HOLLOW BLOCK OR WOOD FRAMING. REFERENCE ANCHOR SCHEDULE FOR PROPER ANCHOR TYPE BASED ON TYPE OF EXISTING STRUCTURE.
5. ANCHORS SHALL BE INSTALLED IN ACCORDANCE WITH MANUFACTURERS' RECOMMENDATIONS.
6. MINIMUM EMBEDMENT AND EDGE DISTANCE EXCLUDES WALL FINISH OR STUCCO.
7. WHERE EXISTING STRUCTURE IS WOOD FRAMING, WOOD FRAMING CONDITIONS VARY. FIELD VERIFY THAT FASTENERS ARE INTO ADEQUATE WOOD FRAMING MEMBERS, NOT PLYWOOD. FASTENING TO PLYWOOD IS ACCEPTABLE ONLY FOR SIDE CLOSURE PIECES.
8. WHERE LAG SCREWS FASTEN TO NARROW FACE OF STUD FRAMING, FASTENER SHALL BE LOCATED IN CENTER OF NOMINAL 2" x 4" (MIN.) WOOD STUD. 3/4" EDGE DISTANCE IS ACCEPTABLE FOR WOOD FRAMING. WOOD STUD SHALL BE "SOUTHERN PINE" G=0.55 OR GREATER DENSITY. LAG SCREWS SHALL HAVE PHILLIPS PAN HEAD OR HEX HEAD.
9. MACHINE SCREWS SHALL HAVE MINIMUM OF 1/2" ENGAGEMENT OF THREADS IN BASE ANCHOR AND MAY HAVE EITHER A PAN HEAD, TRUSS HEAD, OR WAFER HEAD (SIDEWALK BOLT), U.O.N.
10. DESIGNATES ANCHOR CONDITIONS WHICH ARE NOT ACCEPTABLE USES.
11. * DESIGNATES ANCHORS WHICH ARE REMOVABLE BY REMOVING MACHINE SCREW, NUT OR WASHERED WINGNUT.

PRODUCT REVISED
as complying with the Florida
Building Code
Acceptance No. 05-1013.01
Expiration Date 01/11/2007
By Helmy A. Mekkawy
Miami Dade Product Control
Division

Thornton•Tomasetti Group
330 N Andrews Ave., Suite 450 • Ft. Lauderdale, FL 33301
Tel. (954) 522-3690 • Fax (954) 522-3691 • COA # 7519
Website: www.TheTTGroup.com

Copyright © 2005 Thornton-Tomasetti Group, Inc.

STANDARD ACCORDION SHUTTER

SOUTHERN METAL PRODUCTS, LLC - D.B.A.
450 West McNab Road
Ft. Lauderdale, FL 33309
1-800-HURRICANE
ALL BROWARD HURRICANE PANEL

J.W. Knezevich
Professional Engineer
FL License No.: PE 0041961

AUG 17 2006

revisions

no	date	by	description
0	10/10/05	ZL	PREVIOUSLY DRAWING NO. 98-126
1	08/17/06	NW	COUNTY COMMENTS

date 10/10/2005
scale AS NOTED
drawn by MCR
design by ZL
checked by JWK
drawing no. 05-427
sheet 6 of 6

Print Information: P:\FL1\Projects\KK5427.00\Drawings\R1-sub\05-427-06.dwg NWang 08/17/2006 04:33:33pm 09/02/05 11:29