MIAMI-DADE COUNTY, FLORIDA
METRO-DADE FLAGLER BUILDING
140 WEST FLAGLER STREET, SUITE 1603
MIAMI, FLORIDA 33130-1563
(305) 375-2901 FAX (305) 375-2908
www.buildingcodeonline.com

BUILDING CODE COMPLIANCE OFFICE (BCCO)
PRODUCT CONTROL DIVISION

NOTICE OF ACCEPTANCE (NOA)

Custom Glass Company
750 Southwest 14th Avenue
Pompano Beach, FL 33069

SCOPE:

This NOA is being issued under the applicable rules and regulations governing the use of construction materials. The documentation submitted has been reviewed by Miami-Dade County Product Control Division and accepted by the Board of Rules and Appeals (BORA) to be used in Miami Dade County and other areas where allowed by the Authority Having Jurisdiction (AHJ).

This NOA shall not be valid after the expiration date stated below. The Miami-Dade County Product Control Division (In Miami Dade County) and/or the AHJ (in areas other than Miami Dade County) reserve the right to have this product or material tested for quality assurance purposes. If this product or material fails to perform in the accepted manner, the manufacturer will incur the expense of such testing and the AHJ may immediately revoke, modify, or suspend the use of such product or material within their jurisdiction. BORA reserves the right to revoke this acceptance, if it is determined by Miami-Dade County Product Control Division that this product or material fails to meet the requirements of the applicable building code.

This product is approved as described herein, and has been designed to comply with the Florida Building Code, including the High Velocity Hurricane Zone.

DESCRIPTION: Series "CGC-6000" Aluminum Storefront System – S.M.I.

APPROVAL DOCUMENT: Drawing No. **6000-SMI**, titled "CGC-6000 Small Missile Impact Resistant System", sheets 1 through 11 of 11, dated 10/5/05, with revision #2 dated 3/9/06, prepared by manufacturer, signed and sealed by Scott Wolters, P.E., bearing the Miami-Dade County Product Control Approval stamp with the Notice of Acceptance number and approval date by the Miami-Dade County Product Control Division.

MISSILE IMPACT RATING: Small Missile Impact Resistant

LABELING: Each unit shall bear a permanent label with the manufacturer's name or logo, city, state and following statement: "Miami-Dade County Product Control Approved", unless otherwise noted herein.

RENEWAL of this NOA shall be considered after a renewal application has been filed and there has been no change in the applicable building code negatively affecting the performance of this product.

TERMINATION of this NOA will occur after the expiration date or if there has been a revision or change in the materials, use, and/or manufacture of the product or process. Misuse of this NOA as an endorsement of any product, for sales, advertising or any other purposes shall automatically terminate this NOA. Failure to comply with any section of this NOA shall be cause for termination and removal of NOA.

ADVERTISEMENT: The NOA number preceded by the words Miami-Dade County, Florida, and followed by the expiration date may be displayed in advertising literature. If any portion of the NOA is displayed, then it shall be done in its entirety.

INSPECTION: A copy of this entire NOA shall be provided to the user by the manufacturer or its distributors and shall be available for inspection at the job site at the request of the Building Official.

This NOA consists of this page 1 and evidence pages E-1, E-2 and E-3, as well as approval document mentioned above.

The submitted documentation was reviewed by **Manuel Perez, P.E.**

Custom Glass Company

NOTICE OF ACCEPTANCE: EVIDENCE SUBMITTED

A. DRAWINGS

1. Manufacturer's die drawings and sections.
2. Drawing No. **6000-SMI**, Sheets 1 through 11 of 11, titled "CGC-6000 Small Missile Impact Resistant System", dated 10/5/05 with revision #2 dated 3/9/06, prepared by manufacturer, signed and sealed by Scott Wolters, P.E.

B. TESTS

1. Test reports on 1) Uniform Static Air Pressure Test, Loading per FBC TAS 202-94 along with marked-up drawings and installation diagram of aluminum unitized ribbon window system, prepared by Hurricane Test Laboratory, LLC, Test Report No. HTL-0127-0125-04 #1 (**ELEVATION A/2**), dated 1/22-2/05, signed and sealed by Vinu J. Abraham, P.E.
2. Test reports on 1) Uniform Static Air Pressure Test, Loading per FBC TAS 202-94
   2) Large Missile Impact Test per FBC, TAS 201-94
   3) Cyclic Wind Pressure Loading per FBC, TAS 203-94

   along with marked-up drawings and installation diagram of aluminum unitized ribbon window system, prepared by Hurricane Test Laboratory, LLC, Test Report No. HTL-0127-1114-02 #1 and HTL-0127-0602-03 #5 (**ELEVATION B/3**), dated 11/15-18/02 – 1/7/04, signed and sealed by Vinu J. Abraham, P.E.
3. Test reports on 1) Air Infiltration Test, per FBC, TAS 202-94
   2) Uniform Static Air Pressure Test, Loading per FBC TAS 202-94
   3) Water Resistance Test, per FBC, TAS 202-94
   4) Large Missile Impact Test per FBC, TAS 201-94
   5) Small Missile Impact Test per FBC, TAS 201-94
   6) Cyclic Wind Pressure Loading per FBC, TAS 203-94

   along with marked-up drawings and installation diagram of aluminum unitized window system, prepared by Hurricane Test Laboratory, LLC, Test Report No. HTL-0127-0410-03 #1; HTL-0127-0816-03 #1 and HTL-0127-1005-04 #2 (**ELEVATION C1/4**), dated 4/10/03-08/19/03-10/4/04, signed and sealed by Vinu J. Abraham, P.E.
4. Test reports on 1) Large Missile Impact Test per FBC, TAS 201-94
   2) Small Missile Impact Test per FBC, TAS 201-94
   3) Cyclic Wind Pressure Loading per FBC, TAS 203-94

   along with marked-up drawings and installation diagram of aluminum unitized window system, prepared by Hurricane Test Laboratory, LLC, Test Report No. HTL-0127-0410-03 #3 (**ELEVATION C2/5**), dated 4/28/03, signed and sealed by Vinu J. Abraham, P.E.

Manuel Perez, P.E.
Product Control Examiner
NOA No. 05-1013.07
Expiration Date: March 30, 2011
Approval Date: March 30, 2006

NOTICE OF ACCEPTANCE: EVIDENCE SUBMITTED

5. Test reports on 1) Large Missile Impact Test per FBC, TAS 201-94
   2) Small Missile Impact Test per FBC, TAS 201-94
   3) Cyclic Wind Pressure Loading per FBC, TAS 203-94
   along with marked-up drawings and installation diagram of aluminum unitized window system, prepared by Hurricane Test Laboratory, LLC, Test Report No. HTL-0127-0317-03 #1 (**ELEVATION C3/6**), dated 3/10-11/03, signed and sealed by Vinu J. Abraham, P.E.
6. Test reports on 1) Uniform Static Air Pressure Test, Loading per FBC TAS 202-94
   2) Large Missile Impact Test per FBC, TAS 201-94
   3) Small Missile Impact Test per FBC, TAS 201-94
   4) Cyclic Wind Pressure Loading per FBC, TAS 203-94
   along with marked-up drawings and installation diagram of aluminum unitized window system, prepared by Hurricane Test Laboratory, LLC, Test Report No. HTL-0127-0602-03 #2 and HTL-0127-1016-03 #2 (**ELEVATION D/7**), dated 4/10/03, signed and sealed by Vinu J. Abraham, P.E.
7. Test reports on 1) Uniform Static Air Pressure Test, Loading per FBC TAS 202-94
   2) Large Missile Impact Test per FBC, TAS 201-94
   3) Cyclic Wind Pressure Loading per FBC, TAS 203-94
   along with marked-up drawings and installation diagram of aluminum unitized window system, prepared by Hurricane Test Laboratory, LLC, Test Report No. HTL-0127-0602-03 #1 and HTL-0127-1016-03 #2 (**ELEVATION E/8**), dated 6/11/03, signed and sealed by Vinu J. Abraham, P.E.
8. Test reports on 1) Uniform Static Air Pressure Test, Loading per FBC TAS 202-94
   2) Large Missile Impact Test per FBC, TAS 201-94
   3) Cyclic Wind Pressure Loading per FBC, TAS 203-94
   along with marked-up drawings and installation diagram of aluminum unitized window system, prepared by Hurricane Test Laboratory, LLC, Test Report No. HTL-0127-0127-03 #1; HTL-0127-0602-03 #1 and HTL-0127-1009-03 #1 (**ELEVATION F/9**), dated 1/20-5/22/03 & 1/7/04, signed and sealed by Vinu J. Abraham, P.E.
9. Test reports on 1) Air Infiltration Test, per FBC, TAS 202-94
   2) Uniform Static Air Pressure Test, Loading per FBC TAS 202-94
   3) Water Resistance Test, per FBC, TAS 202-94
   4) Large Missile Impact Test per FBC, TAS 201-94
   5) Cyclic Wind Pressure Loading per FBC, TAS 203-94
   along with marked-up drawings and installation diagram of aluminum unitized window system, prepared by Hurricane Test Laboratory, LLC, Test Report No. HTL-0127-0410-03 #2 and HTL-0127-0219-04 #1 (**ELEVATION H/10**), dated 4/24/03-5/6/04, signed and sealed by Vinu J. Abraham, P.E.

Manuel Perez, P.E.
Product Control Examiner
NOA No. 05-1013.07
Expiration Date: March 30, 2011
Approval Date: March 30, 2006

NOTICE OF ACCEPTANCE: EVIDENCE SUBMITTED

10. Test reports on 1) Air Infiltration Test, per FBC, TAS 202-94
2) Uniform Static Air Pressure Test, Loading per FBC TAS 202-94
3) Water Resistance Test, per FBC, TAS 202-94
4) Large Missile Impact Test per FBC, TAS 201-94
5) Cyclic Wind Pressure Loading per FBC, TAS 203-94
along with marked-up drawings and installation diagram of aluminum unitized window system, prepared by Hurricane Test Laboratory, LLC, Test Report No. HTL-0127-0108-03 #1 (**ELEVATION H1/11**), dated 1/6-13/03, signed and sealed by Vinu J. Abraham, P.E.

C. CALCULATIONS

1. Anchor Calculations and structural analysis, complying with FBC-2004, prepared by manufacturer, dated 10/5/05, revised on 3/9/06, signed and sealed by Scott Wolters, P.E. **Complies with ASTM E1300- 02**

D. QUALITY ASSURANCE

1. Miami Dade Building Code Compliance Office (BCCO).

E. MATERIAL CERTIFICATIONS

1. Notice of Acceptance No. **01-0205.02** issued to Solutia Inc. for their "**Saflex /Keepsafe Maximum**" dated 05/17/01, expiring on 05/21/06.

F. STATEMENTS

1. Statement letter of conformance, dated October 5, 2005, signed and sealed by Scott Wolters, P.E.

2. Statement letter of no financial interest, dated October 5, 2005, signed and sealed by Scott Wolters, P.E.

3. Laboratory compliance letter for Test Report no. HTL- 0127-0125-04, issued by Hurricane Test Laboratory, Inc., dated March 14, 2005, signed and sealed by Vinu J. Abraham, P.E.

G. OTHER

1. None.

Manuel Perez, P.E.
Product Control Examiner
NOA No. 05-1013.07
Expiration Date: March 30, 2011
Approval Date: March 30, 2006

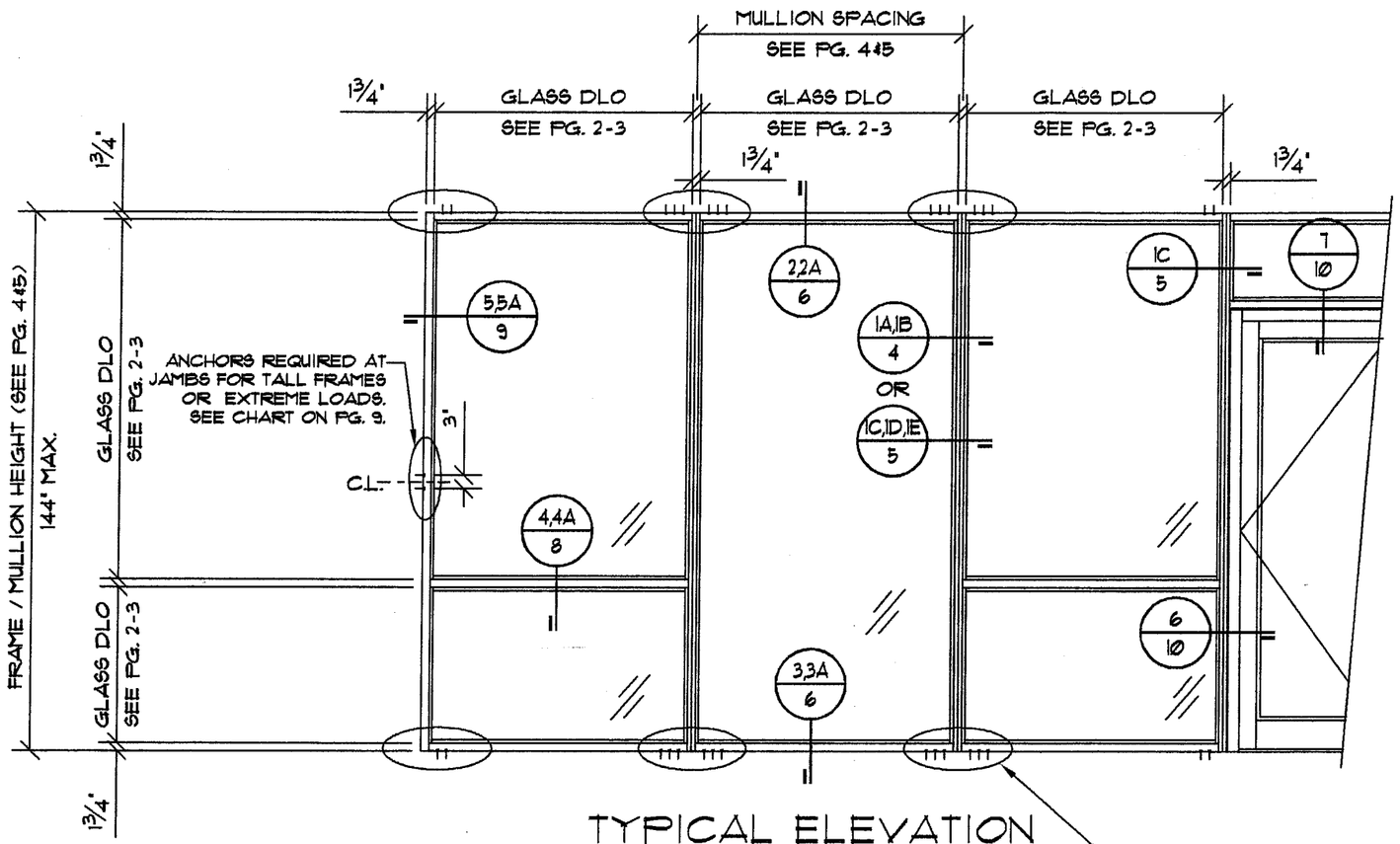

TYPICAL ELEVATION

ANCHORS REQUIRED AT EACH VERTICAL MULLION. SEE SHEET 7 FOR ANCHOR QUANTITY, TYPES, AND SPACING.

CGC-6000

1 3/4 " x 6" STOREFRONT SYSTEM GLAZED FOR SMALL MISSILE IMPACT. SHUTTERS NOT REQUIRED FOR INSTALLATIONS ABOVE 30 FT.

GLASS - SEE CHARTS ON PAGES 2 THRU 3 FOR ALLOWABLE GLASS TYPES, SIZES, AND DESIGN PRESSURES.

MULLIONS - SEE CHARTS ON PAGES 4 AND 5 FOR ALLOWABLE DESIGN PRESSURES FOR VARIOUS MULLION AND REINFORCEMENT CONFIGURATIONS.

ANCHORS - SEE CHARTS ON PAGES 7 AND 9 FOR ALLOWABLE ANCHORS.

SYSTEM - THE DESIGN PRESSURE OF THE ENTIRE SYSTEM IS THE LOWEST ALLOWABLE DESIGN PRESSURE OF THE THREE COMPONENTS ABOVE THAT MAKE UP THE SYSTEM.

DOORS - CGC 6000 IS DESIGNED TO ACCEPT MIAMI-DADE COUNTY APPROVED DOORS FROM OTHER MANUFACTURERS. PLEASE SEE DOOR APPROVAL FOR FASTENER REQUIREMENTS.

MATERIAL LEGEND - SEE PAGE 9.

NOTES:

1. THIS PRODUCT IS DESIGNED TO COMPLY WITH THE 2004 FLORIDA BUILDING CODE, HVHZ, & ASTM 1300-02.
2. DESIGN LOADS MUST BE CALCULATED BY A PROFESSIONAL ENGINEER OR ARCHITECT FOR EACH PROJECT. THE DESIGN PRESSURE CANNOT EXCEED THE TESTED PRESSURE, LISTED ON SHEETS 2-10, FOR EACH COMPONENT OF THIS SYSTEM.
3. WOOD BUCKS BY OTHERS MUST BE ANCORED PROPERLY TO TRANSFER IMPOSED LOADS TO THE STRUCTURE.
4. ANCHORS SHALL BE AS LISTED AND SPACED AS SHOWN ON DETAILS. ANCHOR EMBEDMENT IN BASE MATERIAL SHALL BE BEYOND WALL DRESSING OR STUCCO.
5. CODE REQUIREMENTS FOR SAFE GAURDS MUST BE OBSERVED.
6. GLASS CHARTS ON PAGES 2-4 ARE BASED ON TEST PRESSURES AND ASTM E 1300-02.
7. MATERIALS INCLUDING BUT NOT LIMITED TO STEEL/METAL SCREWS, THAT COME INTO CONTACT WITH OTHER DISSIMILAR MATERIALS SHALL MEET THE REQUIREMENTS OF 2004 FLORIDA BUILDING CODE, SECTION 2003.8.4

FOR METRO-DADE OFFICE USE ONLY.

Approved as complying with the Florida Building Code
Date MARCH 30, 2006
NOA# 05-1013.07
Miami Dade Product Control Division
By Manuel Perez

SEAL:
ENGINEER:
SCOTT WOLTERS
FL PE# 62354
CUSTOM GLASS COMPANY
750 SW 14TH AVE
POMPANO BEACH, FL 33069
3-9-06

REVISIONS:
3 3/9/06
2 2/22/06

SCALE: N.T.S.
DRAWN BY: SW
DATE: 10/5/05

CGC Custom Glass Company Commercial Contractors est. 1974

DRAWING TITLE: CGC-6000 SMALL MISSILE IMPACT RESISTANT SYSTEM
DWG. # 6000-SMI
PAGE TITLE:
PAGE NO. 1/11

750 Southwest 14th Avenue Pompano Beach, Florida 33069 ph.(954) 781-6565 fax (954) 781-6523

SMALL MISSILE GLASS TYPES

POSITIVE AND NEGATIVE PRESSURES ON GLASS CHARTS ARE BASED ON TESTED PRESSURE AND ASTM E 1300-02

Glass Type J (1/4" Heat Strengthened - .060" Saflex PVB - 1/4" Heat Strengthened) Small Missile Only

D.L. OPNG (HEIGHT)	D.L. OPENING (WIDTH)														
	36"	42"	48"	54"	60"	66"	72"	78"	84"	90"	96"	102"	108"	114"	120"
30"	+90,-130	+90,-130	+90,-130	+90,-130	+90,-130	+90,-130	+90,-130	+90,-130	+90,-130	+90,-130	+90,-130	+90,-130	+90,-130	+90,-130	+90,-130
36"	+90,-130	+90,-130	+90,-130	+90,-130	+90,-130	+90,-130	+90,-130	+90,-130	+90,-130	+90,-130	+90,-130	+90,-130	+90,-130	+90,-130	+90,-130
42"	+90,-130	+90,-130	+90,-130	+90,-130	+90,-130	+90,-130	+90,-130	+90,-130	+90,-130	+90,-130	+90,-130	+90,-130	+90,-130	+90,-130	+90,-130
48"	+90,-130	+90,-130	+90,-130	+90,-130	+90,-130	+90,-130	+90,-130	+90,-130	+90,-130	+90,-130	+90,-130	+90,-130	+90,-126	---	---
54"	+90,-130	+90,-130	+90,-130	+90,-130	+90,-130	+90,-130	+90,-130	+90,-130	+90,-130	+90,-130	+90,-128	---	---	---	---
60"	+90,-130	+90,-130	+90,-130	+90,-130	+90,-130	+90,-130	+90,-130	+90,-130	+90,-130	---	---	---	---	---	---
63"	+90,-130	+90,-130	+90,-130	+90,-130	+90,-130	+90,-130	+90,-130	+90,-130	+90,-130	---	---	---	---	---	---
66"	+90,-130	+90,-130	+90,-130	+90,-130	+90,-130	+90,-130	+90,-130	+90,-130	---	---	---	---	---	---	---
69"	+90,-130	+90,-130	+90,-130	+90,-130	+90,-130	+90,-130	+90,-130	---	---	---	---	---	---	---	---
72"	+90,-130	+90,-130	+90,-130	+90,-130	+90,-130	+90,-130	+90,-130	---	---	---	---	---	---	---	---
75"	+90,-130	+90,-130	+90,-130	+90,-130	+90,-130	+90,-130	---	---	---	---	---	---	---	---	---
78"	+90,-130	+90,-130	+90,-130	+90,-130	+90,-130	+90,-130	---	---	---	---	---	---	---	---	---
81"	+90,-130	+90,-130	+90,-130	+90,-130	+90,-130	+90,-130	---	---	---	---	---	---	---	---	---
84"	+90,-130	+90,-130	+90,-130	+90,-130	+90,-130	---	---	---	---	---	---	---	---	---	---
90"	+90,-130	+90,-130	+90,-130	+90,-130	---	---	---	---	---	---	---	---	---	---	---
96"	+90,-130	+90,-130	+90,-130	+90,-128	---	---	---	---	---	---	---	---	---	---	---
102"	+90,-130	+90,-130	+90,-130	---	---	---	---	---	---	---	---	---	---	---	---
108"	+90,-130	+90,-130	+90,-126	---	---	---	---	---	---	---	---	---	---	---	---
114"	+90,-130	+90,-130	---	---	---	---	---	---	---	---	---	---	---	---	---
120"	+90,-130	+90,-130	---	---	---	---	---	---	---	---	---	---	---	---	---
126"	+90,-130	+90,-130	---	---	---	---	---	---	---	---	---	---	---	---	---

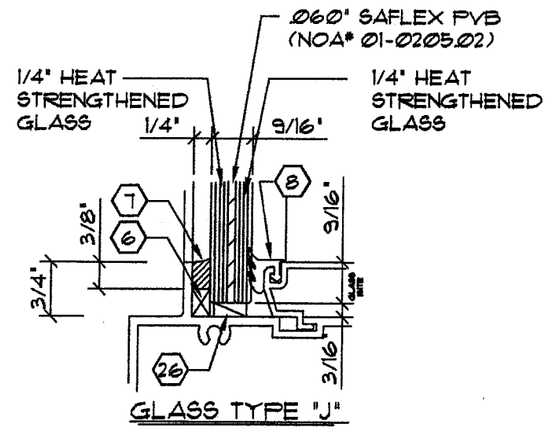

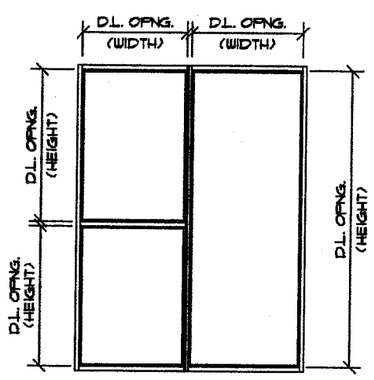

GLASS CHARTS

FOR METRO-DADE OFFICE USE ONLY.

Approved as complying with the Florida Building Code
Date MARCH 30, 2006
NOA# 05-1013.07
Miami Dade Product Control Division
By Manuel Perez

ENGINEER: SCOTT WOLTERS FL PE# 62354
CUSTOM GLASS COMPANY 750 SW 14TH AVE POMPANO BEACH, FL 33069
SEAL: Scott Wolters 3-9-06

REVISIONS: 1 2/22/06; 2 3/9/06

SCALE: N.T.S.
DRAWN BY: SW
DATE: 10/5/05

CGC Custom Glass Company Commercial Contractors est. 1974

DRAWING TITLE: CGC-6000 SMALL MISSILE IMPACT RESISTANT SYSTEM
DWG. # 6000-SM1
PAGE TITLE:
PAGE NO. 2/11

750 Southwest 14th Avenue Pompano Beach, Florida 33069 ph.(954) 781-6565 fax (954) 781-6523

Glass Type K (1/4" Annealed - .060" Saflex PVB - 1/4" Annealed) Small Missile Only

D.L. OPNG (HEIGHT)	D.L. OPENING (WIDTH)														
	36"	42"	48"	54"	60"	66"	72"	78"	84"	90"	96"	102"	108"	114"	120"
30"	+75,-80	+75,-80	+75,-80	+75,-80	+75,-80	+75,-80	+75,-80	+75,-80	+75,-80	+75,-80	+75,-80	+75,-80	+75,-80	+75,-80	+75,-80
36"	+75,-80	+75,-80	+75,-80	+75,-80	+75,-80	+75,-80	+75,-80	+75,-80	+75,-80	+75,-80	+75,-80	+75,-80	+75,-80	+75,-80	+75,-80
42"	+75,-80	+75,-80	+75,-80	+75,-80	+75,-80	+75,-80	+75,-80	+75,-80	+75,-80	+75,-80	+75,-79.9	+75,-76.6	+73.6,-73.6	+70.7,-70.7	+68.7,-68.7
48"	+75,-80	+75,-80	+75,-80	+75,-80	+75,-80	+75,-80	+75,-80	+75,-80	+75,-79.3	+74.9,-74.9	+71,-71	+67.1,-67.1	---	---	---
54"	+75,-80	+75,-80	+75,-80	+75,-80	+75,-80	+75,-80	+75,-80	+75,-77.5	+73.5,-73.3	+68.4,-68.4	---	---	---	---	---
60"	+75,-80	+75,-80	+75,-80	+75,-80	+75,-80	+75,-80	+75,-77.3	+72.5,-72.5	+68,-68	---	---	---	---	---	---
63"	+75,-80	+75,-80	+75,-80	+75,-80	+75,-80	+75,-80	+75,-75.2	+70.3,-70.3	---	---	---	---	---	---	---
66"	+75,-80	+75,-80	+75,-80	+75,-80	+75,-80	+75,-78.7	+73.3,-73.3	+68.2,-68.2	---	---	---	---	---	---	---
69"	+75,-80	+75,-80	+75,-80	+75,-80	+75,-80	+75,-76.3	+71.5,-71.5	---	---	---	---	---	---	---	---
72"	+75,-80	+75,-80	+75,-80	+75,-80	+75,-77.3	+73.3,-73.3	---	---	---	---	---	---	---	---	---
75"	+75,-80	+75,-80	+75,-80	+75,-79.9	+75,-75.2	+71,-71	---	---	---	---	---	---	---	---	---
78"	+75,-80	+75,-80	+75,-80	+75,-77.5	+72.5,-72.5	+68.2,-68.2	---	---	---	---	---	---	---	---	---
81"	+75,-80	+75,-80	+75,-80	+75,-75.2	+70,-70	---	---	---	---	---	---	---	---	---	---
84"	+75,-80	+75,-80	+75,-79.3	+73.5,-73.3	+68,-68	---	---	---	---	---	---	---	---	---	---
90"	+75,-80	+75,-80	+74.9,-74.9	+68.4,-68.4	---	---	---	---	---	---	---	---	---	---	---
96"	+75,-80	+75,-79.9	+71,-71	---	---	---	---	---	---	---	---	---	---	---	---
102"	+75,-80	+75,-76.6	+67.1,-67.1	---	---	---	---	---	---	---	---	---	---	---	---
108"	+75,-80	+73.6,-73.6	---	---	---	---	---	---	---	---	---	---	---	---	---
114"	+75,-80	+70.7,-70.7	---	---	---	---	---	---	---	---	---	---	---	---	---
120"	+75,-80	+68.7,-68.7	---	---	---	---	---	---	---	---	---	---	---	---	---
126"	+75,-80	---	---	---	---	---	---	---	---	---	---	---	---	---	---

Glass Type L (1/4" Tempered - .060" Saflex PVB - 1/4" tempered) Small Missile Only

D.L. OPNG (HEIGHT)	D.L. OPENING (WIDTH)														
	36"	42"	48"	54"	60"	66"	72"	78"	84"	90"	96"	102"	108"	114"	120"
30"	+90,-130	+90,-130	+90,-130	+90,-130	+90,-130	+90,-130	+90,-130	+90,-130	+90,-130	+90,-130	+90,-130	+90,-130	+90,-130	+90,-130	+90,-130
36"	+90,-130	+90,-130	+90,-130	+90,-130	+90,-130	+90,-130	+90,-130	+90,-130	+90,-130	+90,-130	+90,-130	+90,-130	+90,-130	+90,-130	+90,-130
42"	+90,-130	+90,-130	+90,-130	+90,-130	+90,-130	+90,-130	+90,-130	+90,-130	+90,-130	+90,-130	+90,-130	+90,-130	+90,-130	+90,-130	+90,-130
48"	+90,-130	+90,-130	+90,-130	+90,-130	+90,-130	+90,-130	+90,-130	+90,-130	+90,-130	+90,-130	+90,-130	+90,-130	+90,-130	+90,-130	+90,-130
54"	+90,-130	+90,-130	+90,-130	+90,-130	+90,-130	+90,-130	+90,-130	+90,-130	+90,-130	+90,-130	+90,-130	+90,-130	+90,-130	+90,-130	+90,-130
60"	+90,-130	+90,-130	+90,-130	+90,-130	+90,-130	+90,-130	+90,-130	+90,-130	+90,-130	+90,-130	+90,-130	+90,-130	+90,-130	---	---
63"	+90,-130	+90,-130	+90,-130	+90,-130	+90,-130	+90,-130	+90,-130	+90,-130	+90,-130	+90,-130	+90,-130	+90,-130	---	---	---
66"	+90,-130	+90,-130	+90,-130	+90,-130	+90,-130	+90,-130	+90,-130	+90,-130	+90,-130	+90,-130	+90,-130	---	---	---	---
69"	+90,-130	+90,-130	+90,-130	+90,-130	+90,-130	+90,-130	+90,-130	+90,-130	+90,-130	+90,-130	---	---	---	---	---
72"	+90,-130	+90,-130	+90,-130	+90,-130	+90,-130	+90,-130	+90,-130	+90,-130	+90,-130	+90,-130	---	---	---	---	---
75"	+90,-130	+90,-130	+90,-130	+90,-130	+90,-130	+90,-130	+90,-130	+90,-130	+90,-130	---	---	---	---	---	---
78"	+90,-130	+90,-130	+90,-130	+90,-130	+90,-130	+90,-130	+90,-130	+90,-130	---	---	---	---	---	---	---
81"	+90,-130	+90,-130	+90,-130	+90,-130	+90,-130	+90,-130	+90,-130	+90,-130	---	---	---	---	---	---	---
84"	+90,-130	+90,-130	+90,-130	+90,-130	+90,-130	+90,-130	+90,-130	---	---	---	---	---	---	---	---
90"	+90,-130	+90,-130	+90,-130	+90,-130	+90,-130	+90,-130	+90,-130	---	---	---	---	---	---	---	---
96"	+90,-130	+90,-130	+90,-130	+90,-130	+90,-130	+90,-130	---	---	---	---	---	---	---	---	---
102"	+90,-130	+90,-130	+90,-130	+90,-130	+90,-130	---	---	---	---	---	---	---	---	---	---
108"	+90,-130	+90,-130	+90,-130	+90,-130	+90,-130	---	---	---	---	---	---	---	---	---	---
114"	+90,-130	+90,-130	+90,-130	+90,-130	---	---	---	---	---	---	---	---	---	---	---
120"	+90,-130	+90,-130	+90,-130	+90,-130	---	---	---	---	---	---	---	---	---	---	---
126"	+90,-130	+90,-130	+90,-130	---	---	---	---	---	---	---	---	---	---	---	---

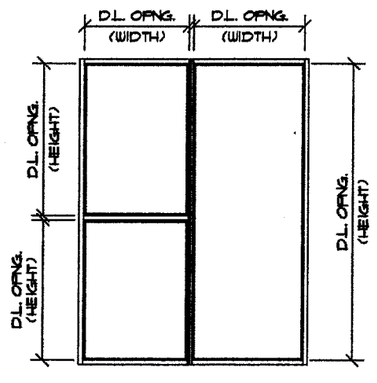

GLASS CHARTS

POSITIVE AND NEGATIVE PRESSURES ON GLASS CHARTS ARE BASED ON TESTED PRESSURE AND ASTM E 1300-02

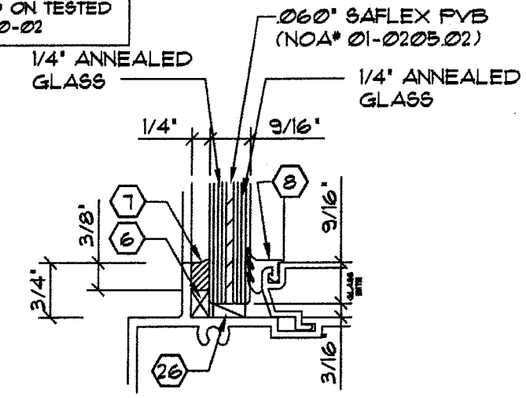

GLASS TYPE "K"

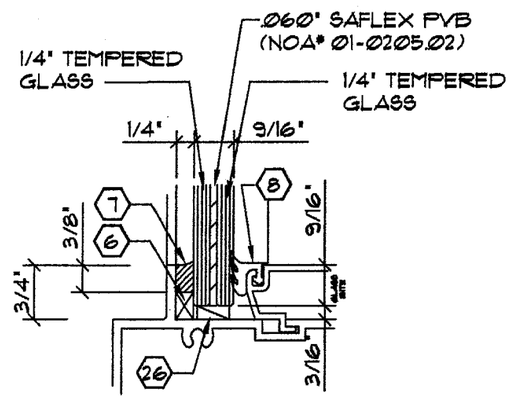

GLASS TYPE "L"

FOR METRO-DADE OFFICE USE ONLY.

Approved as complying with the Florida Building Code
Date MARCH 30, 2006
NOA# 05-1013.07
Miami Dade Product Control Division
By Manuel Perez

SEAL:

ENGINEER:
SCOTT WOLTERS
FL PE# 62354
CUSTOM GLASS COMPANY
750 SW 14TH AVE
POMPANO BEACH, FL 33069
3-9-06

REVISIONS:
3 3/9/06
2 2/22/06
1

SCALE: N.T.S.
DRAWN BY: SW
DATE: 10/5/05

CGC
Custom Glass Company
Commercial Contractors
est. 1974

DRAWING TITLE: CGC-6000 SMALL MISSILE IMPACT RESISTANT SYSTEM
DWG. # 6000-SM1
PAGE TITLE:
PAGE NO. 3/11

750 Southwest 14th Avenue Pompano Beach, Florida 33069 ph.(954) 781-6565 fax (954) 781-6523

MULLION PROPERTIES		
PART	Ixx (in^4)	Sxx (in^3)
CGL 6000	7.542	2.387
CGL 6001	7.046	2.226
3/16"x 4" STEEL	2.90 (AL)	0.5
1/4"x 4" STEEL	3.867 (AL)	0.667
1/2"x 4" STEEL	7.733 (AL)	1.333
3/8"x 5" STEEL	11.328 (AL)	1.562

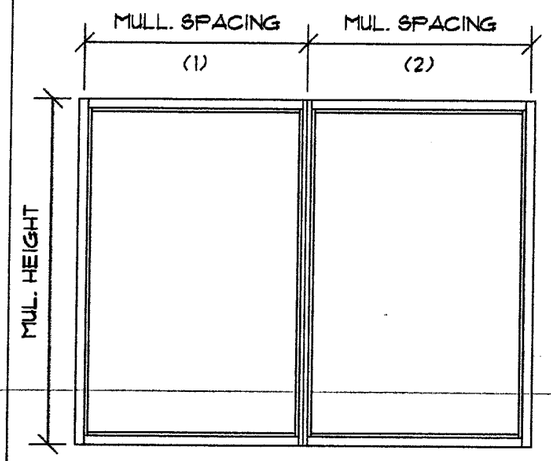

$$\text{WIDTH} = \frac{\text{MUL. SPACE(1)} + \text{MUL. SPACE(2)}}{2}$$

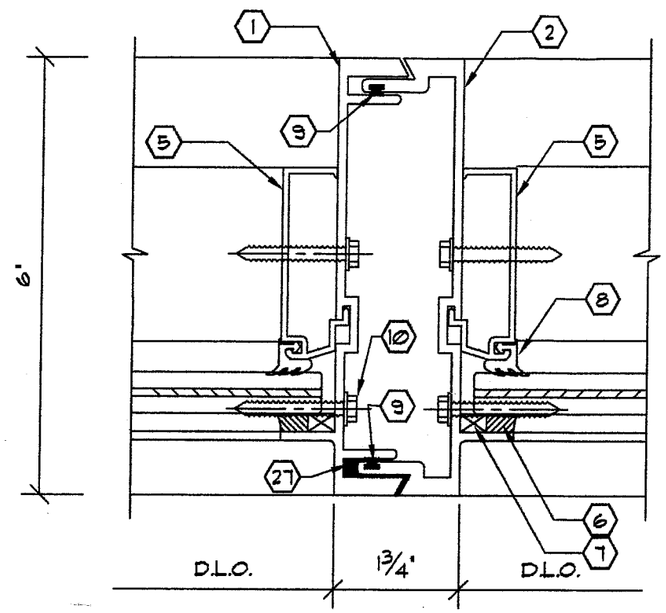

1A / 4 MULLION DETAIL

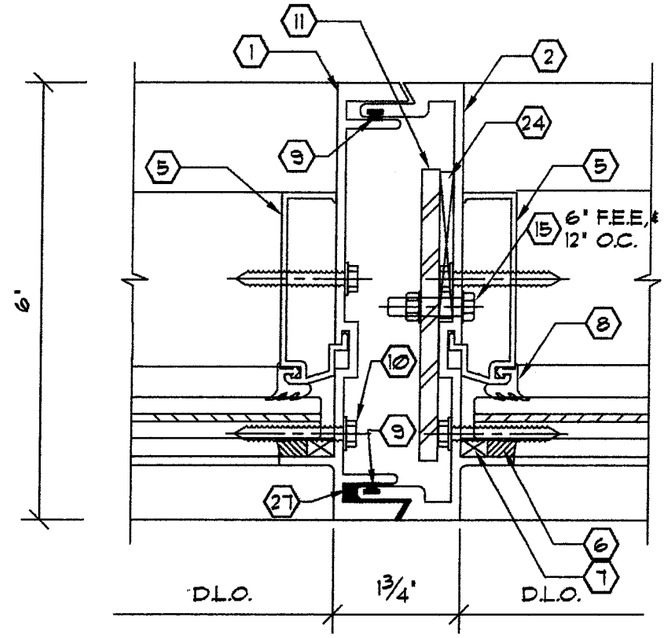

1B / 4 MULLION DETAIL
W/ STEEL REINFORCEMENT TYPE I
3/16" X 4" FLAT BAR
STL. LENGTH = MULL. LENGTH - 4.0"

MULLION CHART					
FRAME DIMENSIONS		ALLOWABLE DESIGN PRESSURE - PSF			
		DETAIL 1A		DETAIL 1B	
HEIGHT	WIDTH	+	-	+	-
84"	36"	75	80	90	105
	48"	75	80	90	105
	60"	75	80	90	105
	72"	75	80	90	105
	84"	75	80	90	105
96"	36"	75	80	90	105
	48"	75	80	90	105
	60"	75	80	90	105
	72	75	80	90	105
	84	75	80	90	105
108"	36"	75	80	90	105
	48"	75	80	90	105
	60"	75	80	90	105
	72	75	80	90	105
120"	36"	75	80	90	105
	48"	75	80	90	105
	60"	75	80	90	105
	72	-	-	-	-
132"	36	-	-	-	-
	48	-	-	-	-
	60	-	-	-	-
144"	36	-	-	-	-
	48	-	-	-	-
	60	-	-	-	-

OTHER CONFIGURATIONS

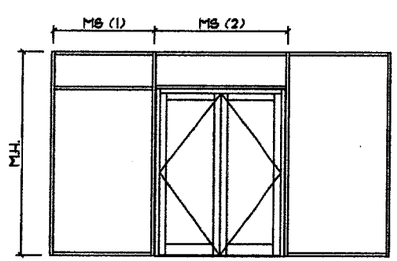

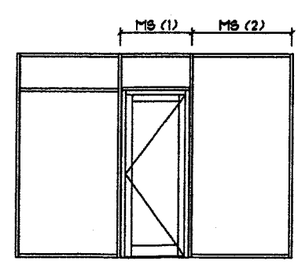

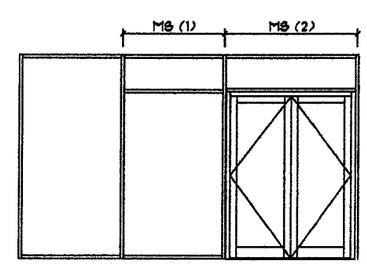

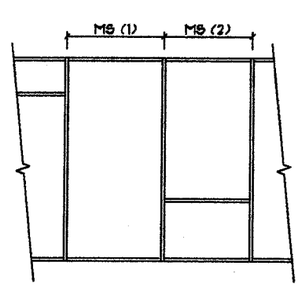

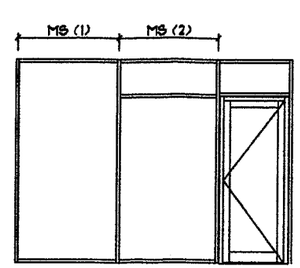

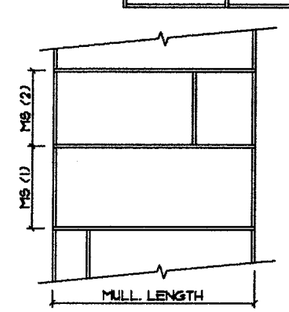

FOR METRO-DADE OFFICE USE ONLY.

Approved as complying with the Florida Building Code
Date MARCH 30, 2006
NOA# 05-1013.07
Miami Dade Product Control Division
By Manuel Perez

SEAL: Scott Wolters 3-9-06

ENGINEER:
SCOTT WOLTERS
FL PE# 62354
CUSTOM GLASS COMPANY
1590 SW 14TH AVE
POMPANO BEACH, FL 33069

REVISIONS:
3 3/9/06
2 2/22/06

SCALE: N.T.S.
DRAWN BY: SW
DATE: 10/5/05

CGC
Custom Glass Company
Commercial Contractors
est. 1974

DRAWING TITLE: CGC-6000 SMALL MISSILE IMPACT RESISTANT SYSTEM
DWG. # 6000-SM1
PAGE TITLE:
PAGE NO. 4/11

750 Southwest 14th Avenue Pompano Beach, Florida 33069 ph.(954) 781-6565 fax (954) 781-6523

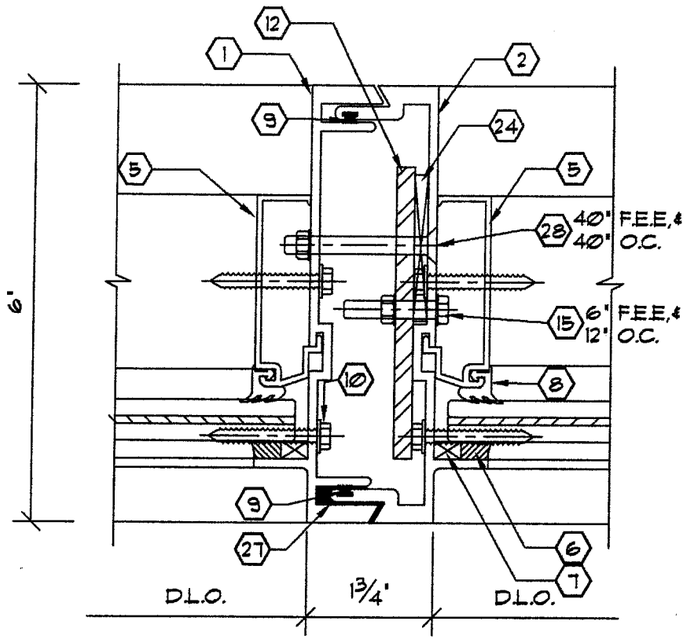

1C / 5 MULLION DETAIL
W/ STEEL REINFORCEMENT TYPE 2
1/4" X 4" FLAT BAR
STL. LENGTH = MULL. LENGTH - 6'

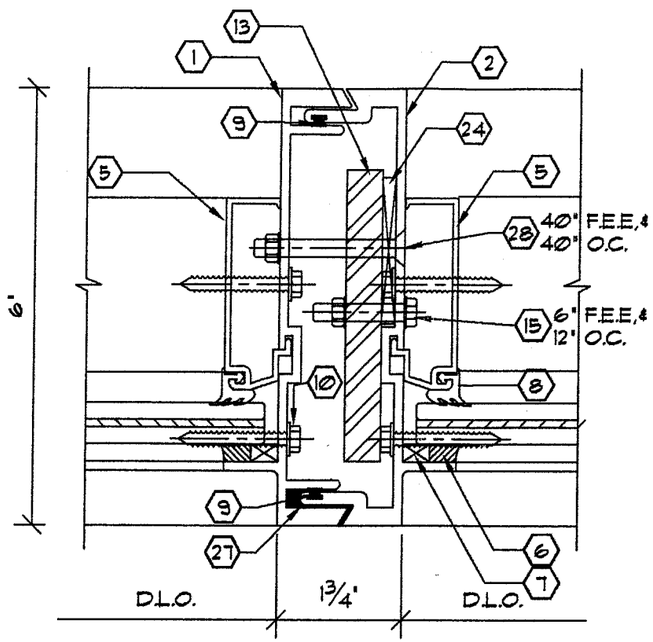

1D / 5 MULLION DETAIL
W/ STEEL REINFORCEMENT TYPE 3
1/2" X 4" FLAT BAR
STL. LENGTH = MULL. LENGTH - 6'

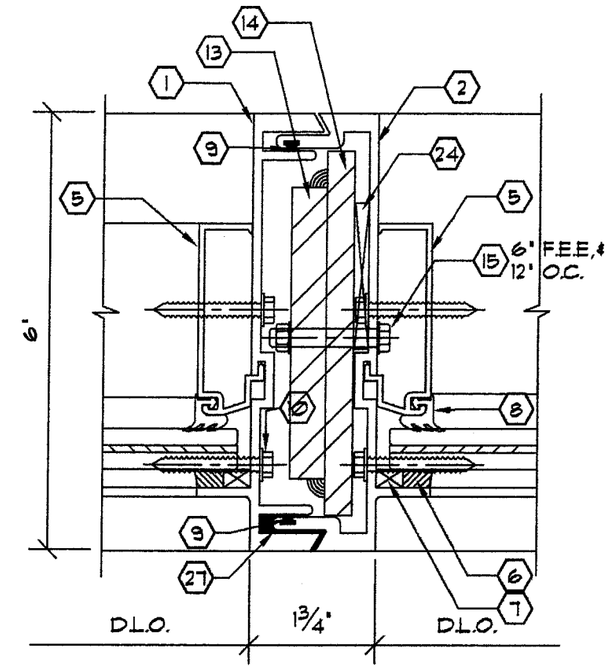

1E / 5 MULLION DETAIL
W/ STEEL REINFORCEMENT TYPE 4
1/2" X 4" & 3/8" X 5 FLAT BAR
STL. LENGTH = MULL. LENGTH - 24'

MULLION CHART

FRAME DIMENSIONS		ALLOWABLE DESIGN PRESSURE (PSF)					
		DETAIL 1C (or 6/10)		DETAIL 1D		DETAIL 1E	
HEIGHT	WIDTH	+	-	+	-	+	-
84"	36"	90	105	90	130	90	105
	48"	90	105	90	130	90	105
	60"	90	105	90	130	90	105
	72	90	105	90	130	90	105
	84	90	105	90	130	90	105
96"	36"	90	105	90	130	90	105
	48"	90	105	90	130	90	105
	60"	90	105	90	130	90	105
	72	90	105	90	130	90	105
	84	90	105	90	130	90	105
108"	36"	90	105	90	130	90	105
	48"	90	105	90	130	90	105
	60"	90	105	90	130	90	105
	72	90	105	90	130	90	105
120"	36"	90	105	90	130	90	105
	48"	90	105	90	130	90	105
	60"	90	105	90	130	90	105
	72	-	-	-	-	90	105
132"	36	-	-	-	-	90	105
	48	-	-	-	-	90	105
	60	-	-	-	-	90	105
144"	36	-	-	-	-	90	105
	48	-	-	-	-	90	105
	60	-	-	-	-	90	105

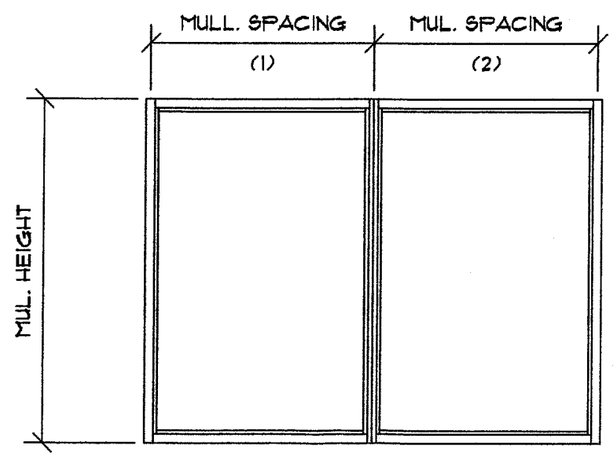

$$\text{WIDTH} = \frac{\text{MUL. SPACE(1)} + \text{MUL. SPACE(2)}}{2}$$

MULLION PROPERTIES

PART	Ixx (in^4)	Sxx (in^3)
CGL 6000	7.542	2.387
CGL 6001	7.046	2.226
3/16"x 4" STEEL	2.90 (AL)	0.5
1/4"x 4" STEEL	3.867 (AL)	0.667
1/2"x 4" STEEL	7.733 (AL)	1.333
3/8"x 5" STEEL	11.328 (AL)	1.562

FOR METRO-DADE OFFICE USE ONLY.

Approved as complying with the Florida Building Code
Date MARCH 30, 2006
NOA# 05-1013.07
Miami Dade Product Control Division
By Manuel Perez

SEAL: Scott Wolters 3-9-06

ENGINEER:
SCOTT WOLTERS
FL PE# 62354
CUSTOM GLASS COMPANY
750 SW 14TH AVE
POMPANO BEACH, FL 33069

REVISIONS:
3 3/9/06
2 2/22/06
1

SCALE: N.T.S.
DRAWN BY: SW
DATE: 10/5/05

CGC Custom Glass Company Commercial Contractors est. 1974

DRAWING TITLE: CGC-6000 SMALL MISSILE IMPACT RESISTANT SYSTEM
DWG. # 6000-SM1
PAGE TITLE:
PAGE NO. 5/11

750 Southwest 14th Avenue Pompano Beach, Florida 33069 ph.(954) 781-6565 fax (954) 781-6523

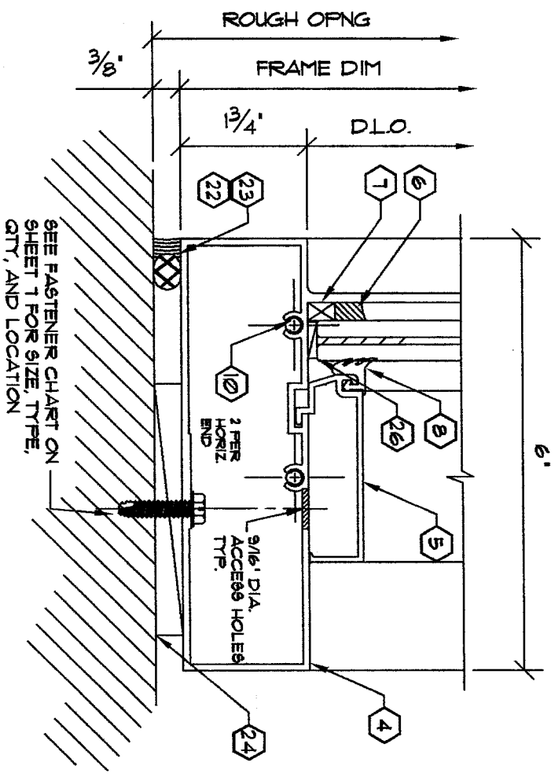

3/6 SILL DETAIL

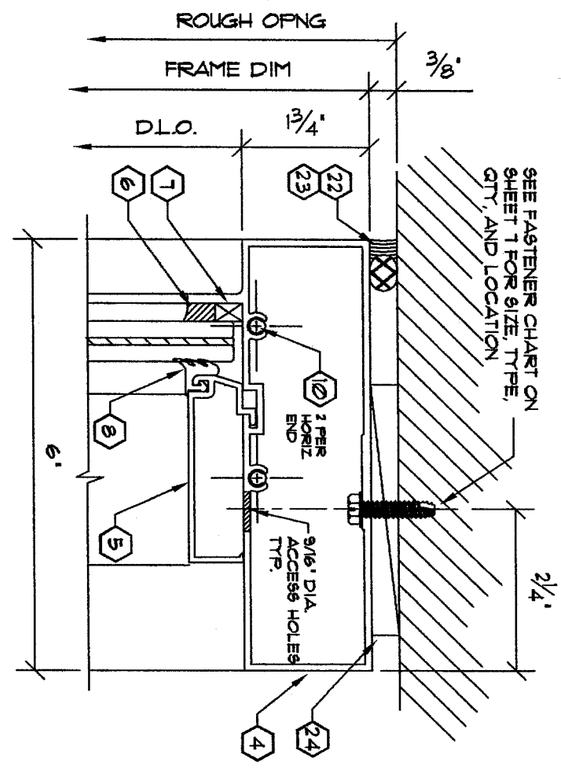

2/6 HEAD DETAIL

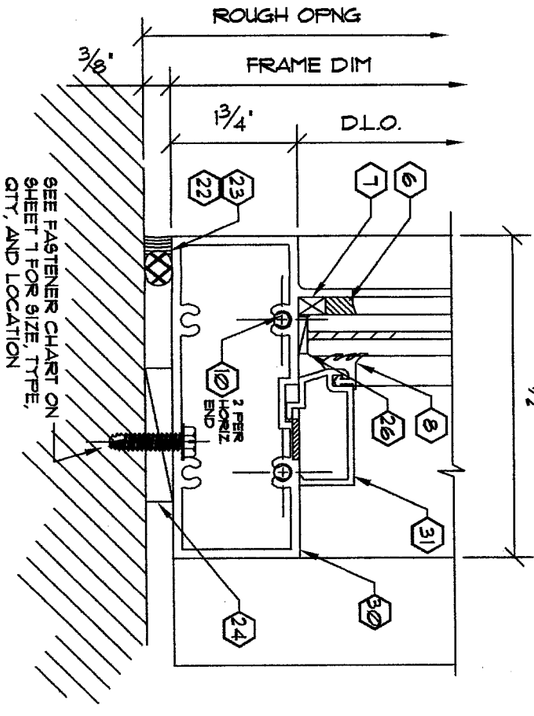

3A/6 OPTIONAL SILL DETAIL

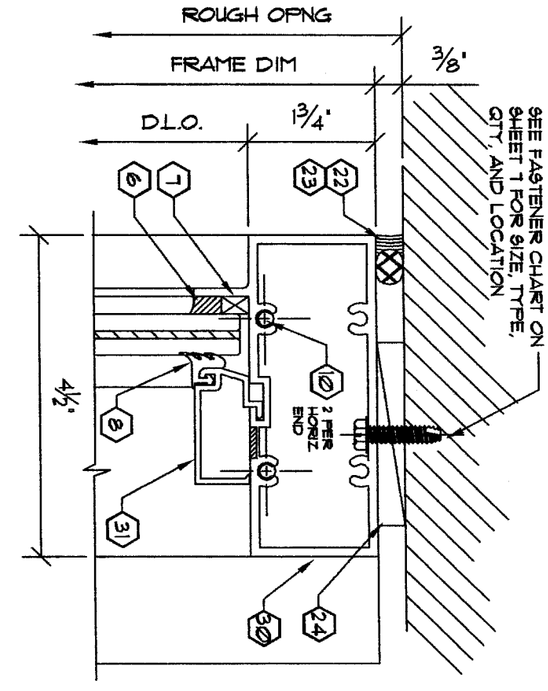

2A/6 OPTIONAL HEAD DETAIL

FOR METRO-DADE OFFICE USE ONLY:

Approved as complying with the Florida Building Code
Date MARCH 30, 2006
NOA# 05-1013.07
Miami Dade Product Control Division
By: Manuel Perez

DRAWING TITLE: CGC-6000 SMALL MISSILE IMPACT RESISTANT SYSTEM		SCALE: N.T.S.	REVISIONS:
DWG. # 6000-SMI		DRAWN BY: SW	△
PAGE TITLE:	PAGE NO. 6/11	DATE: 10/5/05	2 △ 3/9/06
			1 △ 2/22/06

CGC
Custom Glass Company
Commercial Contractors
est. 1974

ENGINEER:
SCOTT WOLTERS
FL PE# 62354
CUSTOM GLASS COMPANY
750 SW 14TH AVE
POMPANO BEACH, FL 33069

SEAL: Scott Wolters 3-9-06

750 Southwest 14th Avenue Pompano Beach, Florida 33069 ph.(954) 781-6565 fax (954) 781-6523

WOOD BUCKS AND METAL STRUCTURE NOT BY CGC. WOOD BUCKS MUST BE PROPERLY ATTACHED TO SUBSTRATE TO TRANSFER LOADS IMPOSED BY GLAZING SYSTEM TO THE BUILDING STRUCTURE.

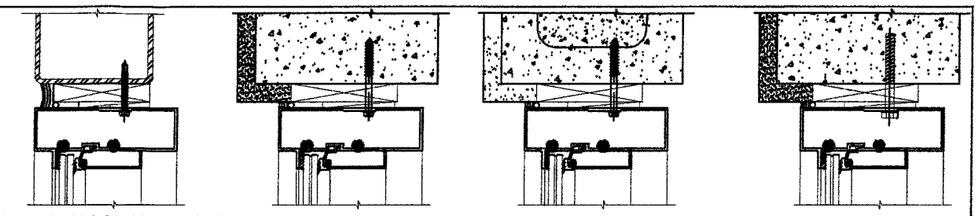

TYPE 'B' IN STEEL OR ALUM. WITH WOOD BUCK — TYPE 'C' IN CONCRETE WITH WOOD BUCK — TYPE 'C' IN CMU BLOCK WITH WOOD BUCK — TYPE 'D' IN CONCRETE WITH WOOD BUCK

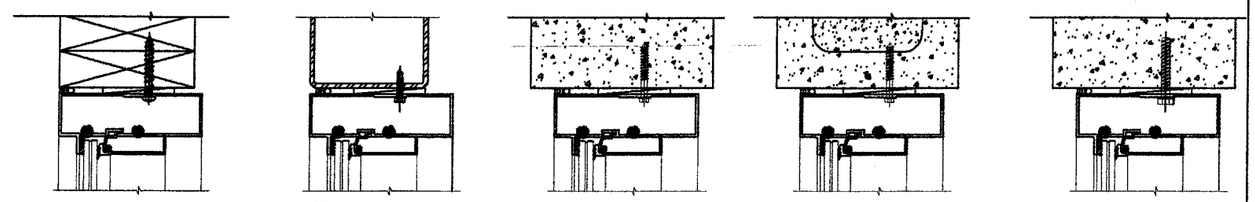

TYPE 'A' IN WOOD — TYPE 'B' IN STEEL OR ALUMINUM — TYPE 'C' IN CONCRETE — TYPE 'C' IN CMU BLOCK — TYPE 'D' IN CONCRETE

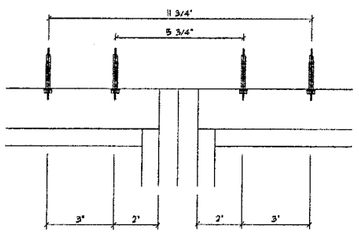

INTERMEDIATE VERTICAL

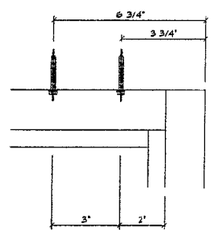

JAMB VERTICAL

ANCHOR PATTERN 2

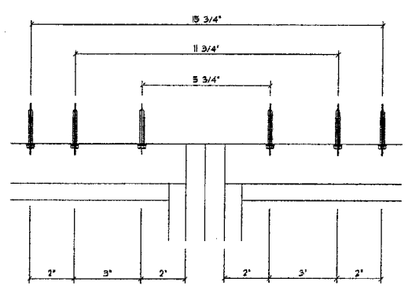

INTERMEDIATE VERTICAL

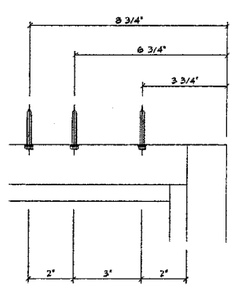

JAMB VERTICAL

ANCHOR PATTERN 3

PERIMETER FASTENER CHART

FRAME DIMENSIONS HEIGHT	WIDTH	ALLOWABLE DESIGN PRESSURE (PSF) — VALUES ARE FOR FASTENERS WITH SHIM SPACINGS UP TO 3/8" MAX.								ALTERNATE VALUES FOR SHIM SPACING 1/4" OR LESS					
		TYPE A (WOOD)		TYPE B (ALUM. OR STEEL)		TYPE C (CONCRETE OR CMU)		TYPE D (CONCRETE)		TYPE B (ALUM. OR STEEL)		TYPE C (CONCRETE)		TYPE C (CMU BLOCK)	
		ANCHOR PATTERN #2	ANCHOR PATTERN #3	ANCHOR PATTERN #2	ANCHOR PATTERN #3	ANCHOR PATTERN #2	ANCHOR PATTERN #3	ANCHOR PATTERN #2	ANCHOR PATTERN #3	ANCHOR PATTERN #2	ANCHOR PATTERN #3	ANCHOR PATTERN #2	ANCHOR PATTERN #3	ANCHOR PATTERN #2	ANCHOR PATTERN #3
84"	36"	88.4	130.0	111.6	130.0	65.9	98.8	130.0	130.0	130.0	130.0	130.0	130.0	100.6	130.0
	48"	66.3	99.4	83.7	125.6	49.4	74.1	130.0	130.0	130.0	130.0	109.7	130.0	75.4	113.1
	60"	53.0	79.5	66.9	100.4	39.5	59.3	130.0	130.0	109.4	130.0	87.8	130.0	60.3	90.5
	72	44.2	66.3	55.8	83.7	33.0	49.4	130.0	130.0	91.2	130.0	73.1	109.7	50.3	75.4
	84	37.9	56.8	47.8	71.8	28.2	42.4	130.0	130.0	78.2	117.3	62.7	94.0	43.1	64.7
96"	36"	77.3	116.0	97.7	130.0	57.7	86.5	130.0	130.0	130.0	130.0	128.0	130.0	88.0	130.0
	48"	58.0	87.0	73.2	109.9	43.2	64.9	130.0	130.0	119.7	130.0	96.0	130.0	66.0	99.0
	60"	46.4	69.6	58.6	87.9	34.6	51.9	130.0	130.0	95.8	130.0	76.8	115.2	52.8	79.2
	72	38.7	58.0	48.8	73.2	28.8	43.3	130.0	130.0	79.8	119.7	64.0	96.0	44.0	66.0
	84	33.1	49.7	41.8	62.8	24.7	37.1	105.0	105.0	68.4	102.6	54.9	82.3	37.7	56.6
108"	36"	68.7	103.1	86.8	130.0	51.2	76.9	130.0	130.0	130.0	130.0	113.8	130.0	78.2	117.3
	48"	51.5	77.3	65.1	97.7	38.4	57.7	130.0	130.0	106.4	130.0	85.3	128.0	58.7	88.0
	60"	41.2	61.9	52.1	78.1	30.8	46.1	130.0	130.0	85.1	127.7	68.3	102.4	47.0	70.4
	72	34.4	51.5	43.4	65.1	25.6	38.4	130.0	130.0	70.9	106.4	56.9	85.3	39.1	58.7
	84	29.5	44.2	37.2	55.8	22.0	33.0	105.0	105.0	60.8	91.2	48.8	73.1	33.5	50.3
120"	36	61.9	92.8	78.1	79.5	46.1	69.2	130.0	130.0	127.7	130.0	102.4	130.0	70.4	105.6
	48"	46.4	69.6	58.6	79.5	34.6	51.9	130.0	130.0	95.8	130.0	76.8	115.2	52.8	79.2
	60"	37.1	55.7	46.9	70.3	27.7	41.5	130.0	130.0	76.6	114.9	61.4	92.2	42.2	63.4
	72	30.9	46.4	39.0	58.6	23.1	34.6	105.0	105.0	63.8	95.8	51.2	76.8	35.2	52.8
132"	36	56.2	84.4	64.2	64.2	41.9	48.4	105.0	105.0	105.0	105.0	93.0	105.0	64.0	96.0
	48	42.2	63.3	53.3	64.2	31.4	47.2	105.0	105.0	87.1	105.0	69.8	104.7	48.0	72.0
	60	33.7	50.6	42.6	63.9	25.2	37.8	105.0	105.0	69.6	104.5	55.9	83.8	32.0	57.6
	72	28.1	42.2	35.5	53.2	21.0	31.4	105.0	105.0	58.0	87.0	46.5	69.8	27.9	48.0
144"	36	51.5	77.3	64.2	64.2	38.4	48.4	105.0	105.0	105.0	105.0	85.3	105.0	64.0	105.0
	48	38.7	58.0	48.8	64.2	28.8	43.3	105.0	105.0	79.8	105.0	64.0	96.0	44.0	66.0
	60	30.9	46.4	39.0	58.6	23.1	34.6	105.0	105.0	63.8	95.8	51.2	76.8	35.2	52.8

TYPICAL ANCHORS

TYPE A: #14 PAN HEAD SHEET METAL SCREW OR WOOD SCREW INTO WOOD WITH 1 1/2" EMBEDMENT, 1 3/4" EDGE DISTANCE

TYPE B: 1/4"-20 HEX HEAD THREAD FORMING SCREW. 1/4" PENETRATION THROUGH STEEL OR ALUMINUM, 3/4" EDGE DISTANCE.

TYPE C: 1/4" HEX HEAD TAPCON (BY ITW/BUILDEX) DIRECTLY INTO CONCRETE/CMU, OR THRU WOOD BUCK INTO CONCRETE/CMU, WITH 1 3/4" EMBEDMENT, 2 1/2" EDGE DISTANCE.

TYPE D: 3/8" POWERS WEDGE BOLT DIRECTLY INTO CONCRETE, OR THRU WOOD BUCK INTO CONCRETE, WITH 2" EMBEDMENT, 3 3/4" EDGE DISTANCE.

FOR METRO-DADE OFFICE USE ONLY.

Approved as complying with the Florida Building Code
Date MARCH 30, 2006
NOA# 05-1013.07
Miami Dade Product Control Division
By Manuel Perez

ENGINEER: SCOTT WOLTERS FL PE# 62354
CUSTOM GLASS COMPANY 750 SW 14TH AVE POMPANO BEACH, FL 33069
SEAL: 3-9-06
750 Southwest 14th Avenue Pompano Beach, Florida 33069 ph.(954) 781-6565 fax (954) 781-6523

REVISIONS: 2 3/9/06; 1 2/22/06

SCALE: N.T.S.
DRAWN BY: SW
DATE: 10/3/05

CGC Custom Glass Company Commercial Contractors est. 1974

DRAWING TITLE: CGC-6000 SMALL MISSILE IMPACT RESISTANT SYSTEM
DWG. # 6000-SMI
PAGE TITLE:
PAGE NO. 7/11

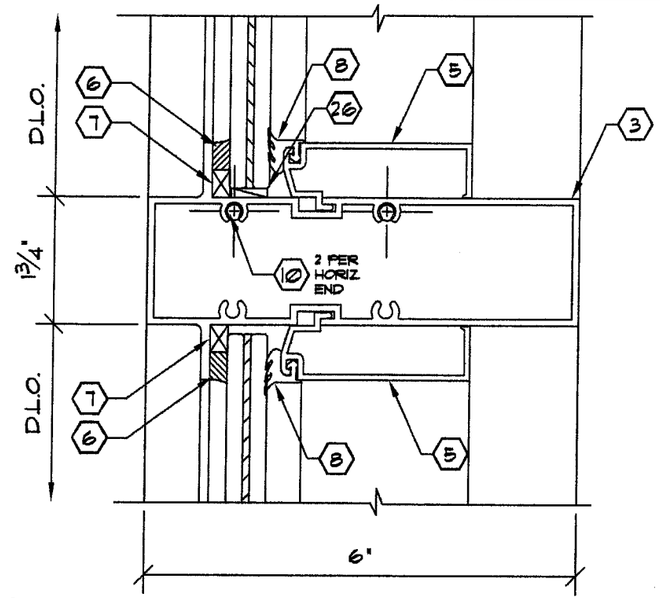

4/8 HORIZONTAL DETAIL

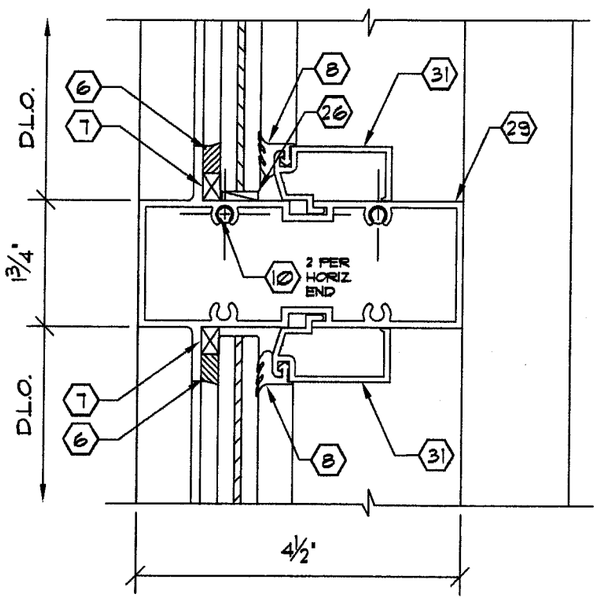

4A/8 OPTIONAL HORIZONTAL DETAIL

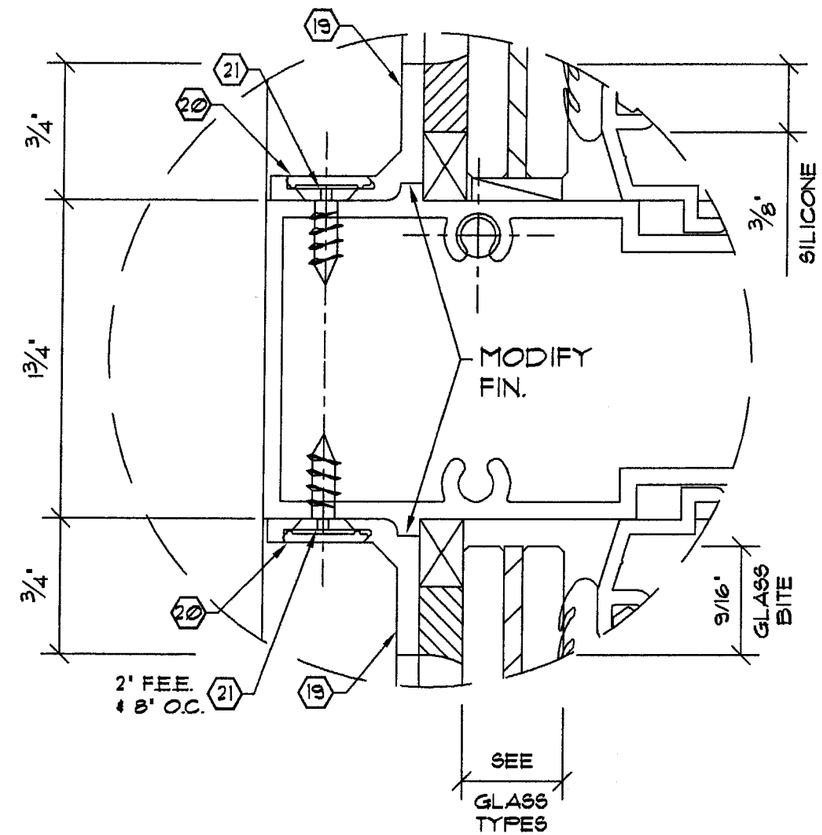

ALTERNATE GLAZING DETAIL
FOR HEAD,HORIZONTAL, SILL, VERTICAL, AND JAMB.

FOR METRO-DADE OFFICE USE ONLY.

Approved as complying with the Florida Building Code
Date MARCH 30, 2006
NOA# 05-1013.07
Miami Dade Product Control Division
By Manuel Perez

SEAL: Scott Wolters 3-9-06

ENGINEER:
SCOTT WOLTERS
FL PE# 62354
CUSTOM GLASS COMPANY
750 SW 14TH AVE
POMPANO BEACH, FL 33069

REVISIONS:
3 3/9/06
2 2/22/06
1

SCALE: N.T.S.
DRAWN BY: SW
DATE: 10/5/05

CGC Custom Glass Company Commercial Contractors est. 1974

DRAWING TITLE: CGC-6000 SMALL MISSILE IMPACT RESISTANT SYSTEM
DWG. # 6000-SM1
PAGE TITLE:
PAGE NO. 8/11

750 Southwest 14th Avenue Pompano Beach, Florida 33069 ph.(954) 781-6565 fax (954) 781-6523

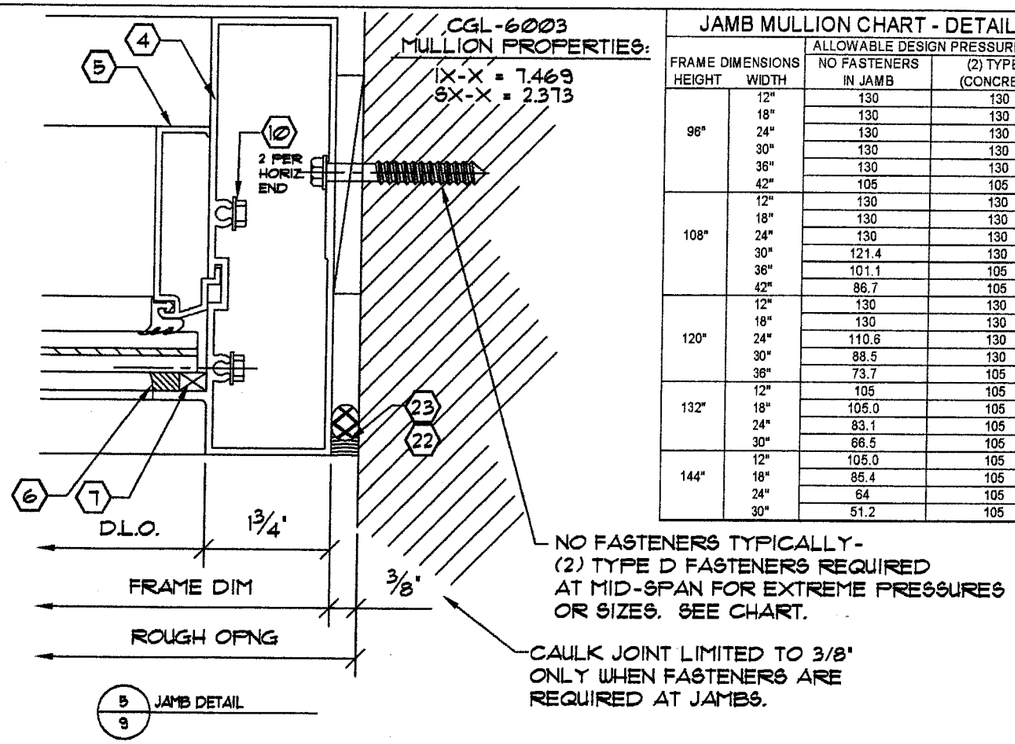

JAMB MULLION CHART - DETAIL 5

FRAME DIMENSIONS HEIGHT	WIDTH	ALLOWABLE DESIGN PRESSURE (PSF) NO FASTENERS IN JAMB	(2) TYPE D (CONCRETE)
96"	12"	130	130
	18"	130	130
	24"	130	130
	30"	130	130
	36"	130	130
	42"	105	105
108"	12"	130	130
	18"	130	130
	24"	130	130
	30"	121.4	130
	36"	101.1	105
	42"	86.7	105
120"	12"	130	130
	18"	130	130
	24"	110.6	130
	30"	88.5	130
	36"	73.7	105
132"	12"	105	105
	18"	105.0	105
	24"	83.1	105
	30"	66.5	105
144"	12"	105.0	105
	18"	85.4	105
	24"	64	105
	30"	51.2	105

MATERIALS

ITEM NO.	PART NO.	QTY.	DESCRIPTION	MATERIAL	MFGR / SUPPLIER / REMARKS
1	CGL-6000		FEMALE MULLION	6063-T6	CUSTOM GLASS
2	CGL-6001		MALE MULLION	6063-T6	CUSTOM GLASS
3	CGL-6002		HORIZONTAL	6063-T6	CUSTOM GLASS
4	CGL-6003		PERIMETER HEAD, SILL & JAMB	6063-T6	CUSTOM GLASS
5	CGL-6004		GLAZING STOP	6063-T6	CUSTOM GLASS
6	DC-995		STRUCTURAL SEALANT	SILICONE	DOW CORNING
6	PROGLAZE		STRUCTURAL SEALANT	SILICONE	TREMCO
6	SPECTUM II		STRUCTURAL SEALANT	SILICONE	TREMCO
7	TAPE		1/4" X 3/8" FOAM TAPE (ADHESIVE ONE SIDE)		H.O. PRODUCTS
8	H63		EXTRUDED GASKET	VINYL	UNIVERSAL RUBBER
9	HI-FIN		7900 SERIES	PILE	SCHLEGEL
10	FASTENER		#12 X 1 1/2 HWH SMS (1 1/4" IN SPLINE)		I.S.C.
11	TYPE 1		3/16" X 4" FLAT BAR	A36 STEEL	W/ SHOP PRIMER
12	TYPE 2		1/4" X 4" FLAT BAR	A36 STEEL	W/ SHOP PRIMER
13	TYPE 3		1/2" X 4" FLAT BAR	A36 STEEL	W/ SHOP PRIMER
14	TYPE 4		3/8" X 5" FLAT BAR	A36 STEEL	W/ SHOP PRIMER
15	FASTENER		1/4-20 X 1 1/2" HD MS	SAE GR. 2	
16	FASTENER		1/4-20 X 1 3/4" HD MS	SAE GR. 2	
18			1/4" DIA, HEX NUT	SAE GR. 2	
19	CGL-4505		3/4" APPLIED SPANDREL ADAPTOR	6063-T6	CUSTOM GLASS
20	CGL-4506		APPLIED COVER	6063-T6	CUSTOM GLASS
21	FASTENER		#10 X 1/2" FH SMS (UNDER CUT)	SAE GR. 2	
22	SEALANT		WEATHER SEAL	SIKAFLEX 1A	SIKA
23			BACKER ROD OPEN CELL	POLYETHYLENE	TUNDRA
24	SHIM		SHIM	PLASTIC	
25	SM5504		NARROW JOINT SEALANT	ACRYL-P	SCHNEE-MOOREHEAD
26	SET BLK		3/16" x 1/2" x 4" LONG SETTING BLOCK	EPDM	AT 1/4 POINTS
27	SEALANT		SIKAFLEX 1A	CAULK	SIKA
28	FASTENER		1/4"-20 x 2" FH MACHINE SCREW	SAE GR. 2	I.S.C.
29	CGL-4502		4 1/2" HORIZONTAL	6063-T6	CUSTOM GLASS
30	CGL-4503		4 1/2" HEAD/SILL/JAMB	6063-T6	CUSTOM GLASS
31	CGL-4504		4 1/2" GLAZING STOP	6063-T6	CUSTOM GLASS

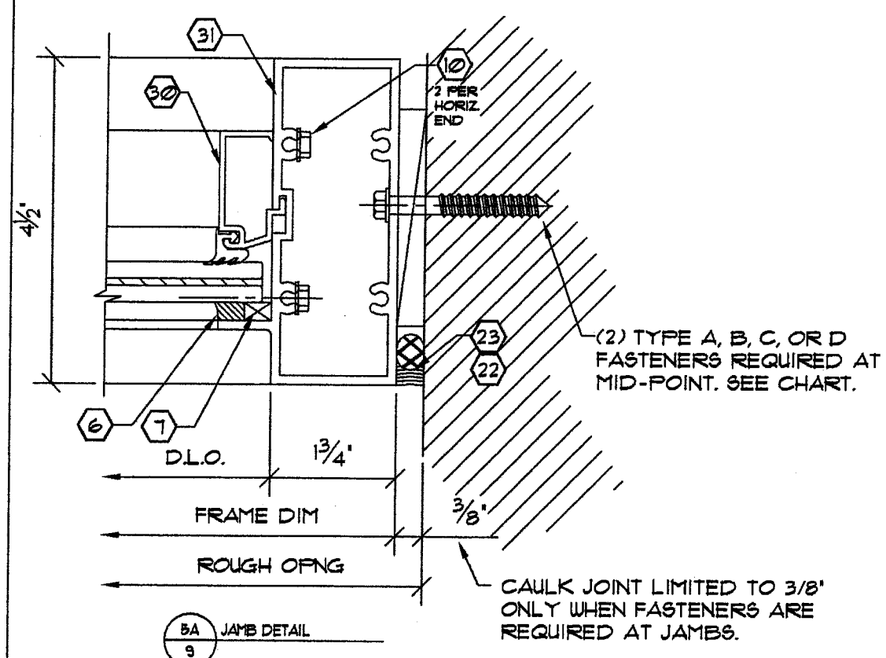

JAMB MULLION CHART - DETAIL 5A

FRAME DIMENSIONS HEIGHT	WIDTH	ALLOWABLE DESIGN PRESSURE (PSF) (2) TYPE A (WOOD)	(2) TYPE B (METAL)	(2) TYPE C (CONC. OR CMU)	(2) TYPE D (CONCRETE)
84"	12"	106	130.0	69.8	130
	18"	70.7	89.2	52.7	130
	24"	53	66.9	39.5	130
	30"	42.4	53.5	31.6	130
	36"	35.3	44.6	26.3	130
	42"	30.3	38.2	22.6	130
96"	12"	92.8	117.0	69.1	130
	18"	61.8	78.1	46.1	130
	24"	46.4	58.5	34.5	130
	30"	37.1	46.9	27.7	130
	36"	30.9	39.0	23.0	130
	42"	26.5	33.5	19.8	105
108"	12"	82.4	104.0	61.4	130
	18"	55	69.3	40.9	130
	24"	41.2	52.0	30.7	130
	30"	33	41.6	24.6	130
	36"	27.5	34.7	20.5	105
	42"	23.5	29.8	17.6	105
120"	12"	74.2	93.6	55.3	130
	18"	49.5	62.4	36.9	130
	24"	37.1	46.8	27.6	130
	30"	29.7	37.5	22.1	130
	36"	24.7	31.2	18.4	105
132"	12"	67.4	113.5	67.0	105
	18"	45	75.7	44.7	105
	24"	33.7	56.8	33.5	105
	30"	27	42.6	25.1	105
144"	12"	61.8	78.1	46.1	105
	18"	41.2	52.0	30.7	105
	24"	30.9	39.0	23.0	105
	30"	24.7	31.2	18.4	105

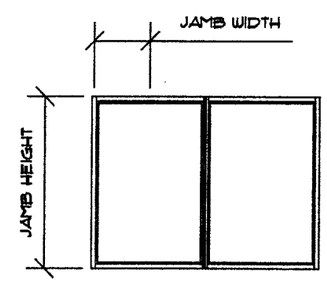

FOR METRO-DADE OFFICE USE ONLY.

Approved as complying with the Florida Building Code
Date MARCH 30, 2006
NOA# 05-1013.07
Miami Dade Product Control Division
By

SEAL:

ENGINEER:
SCOTT WOLTERS
FL PE# 62354
CUSTOM GLASS COMPANY
750 SW 14TH AVE
POMPANO BEACH, FL 33069
3-9-06

REVISIONS:
3 3/9/06
2 2/22/06

SCALE: N.T.S.
DRAWN BY: SW
DATE: 10/5/05

CGC Custom Glass Company Commercial Contractors est. 1974

DRAWING TITLE: CGC-6000 SMALL MISSILE IMPACT RESISTANT SYSTEM
DWG. # 6000-SMI
PAGE TITLE:
PAGE NO. 9/11

750 Southwest 14th Avenue Pompano Beach, Florida 33069 ph.(954) 781-6565 fax (954) 781-6523

PLEASE NOTE: YKK DOOR DETAILS ARE SHOWN FOR REFERENCE ONLY. ANY MIAMI-DADE APPROVED DOOR MAY BE USED WITH THIS SYSTEM. PLEASE SEE DOOR APPROVAL FOR FASTENER TYPE AND LOCATION.

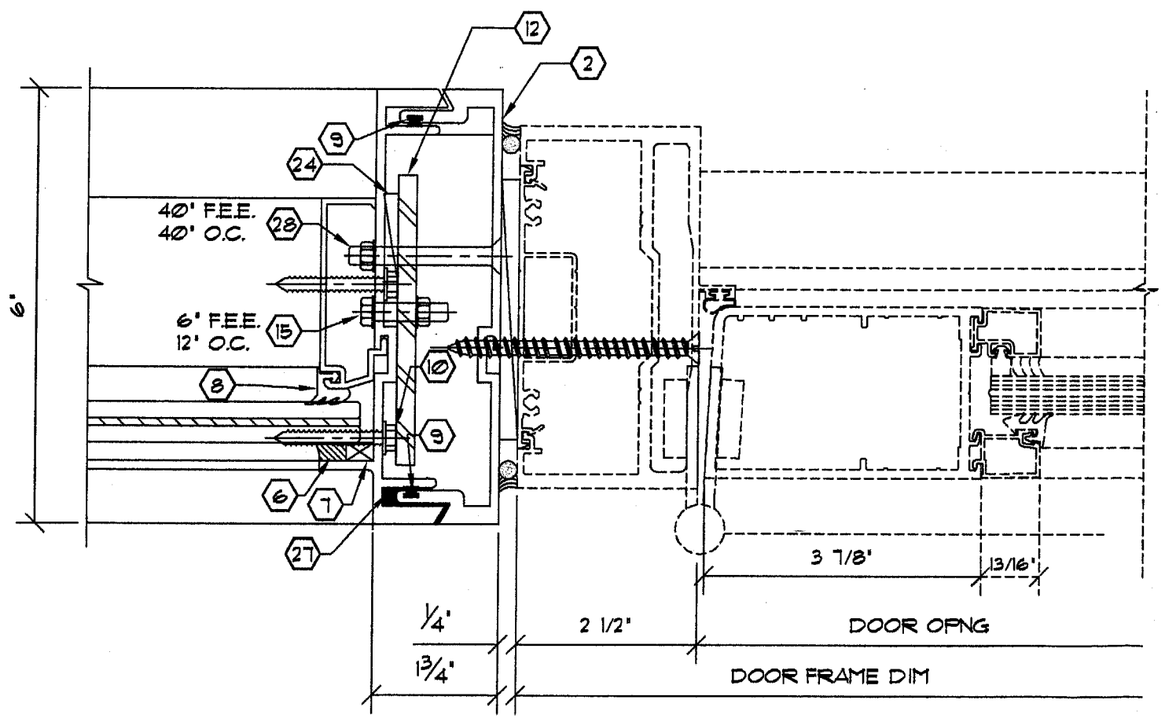

6/10 DOORJAMB DETAIL
W/ STEEL REINFORCEMENT TYPE 2
1/4' X 4' FLAT BAR
STL. LENGTH = MULL. LENGTH - 6'

7/10 DOOR TRANSOM

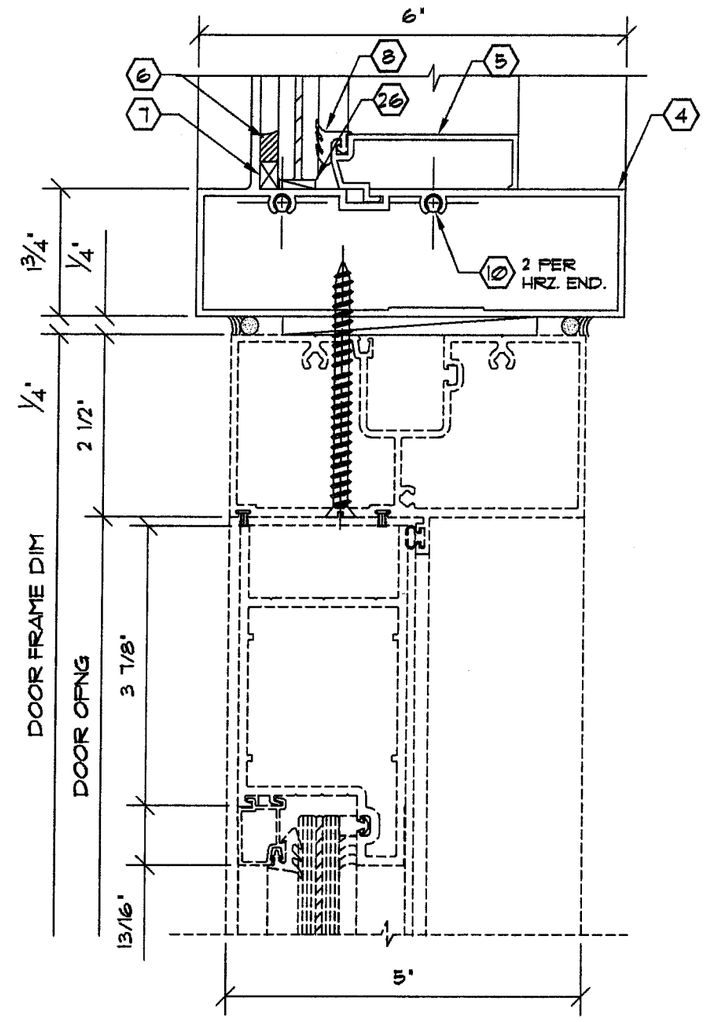

FOR METRO-DADE OFFICE USE ONLY.

Approved as complying with the Florida Building Code
Date MARCH 30 2006
NOA# 05-1013.07
Miami Dade Product Control Division
By Manuel Perez

SEAL: Scott Wolters 3-9-06

ENGINEER:
SCOTT WOLTERS
FL PE# 62354
CUSTOM GLASS COMPANY
750 SW 14TH AVE
POMPANO BEACH, FL 33069

REVISIONS:
2 3/9/06
1 1/18/06

SCALE: N.T.S.
DRAWN BY: SW
DATE: 10/5/05

CGC Custom Glass Company Commercial Contractors est. 1914

DRAWING TITLE: CGC-6000 SMALL MISSILE IMPACT RESISTANT SYSTEM
DWG. # 6000-SMI
PAGE TITLE:
PAGE NO. 10/11

750 Southwest 14th Avenue Pompano Beach, Florida 33069 ph.(954) 781-6565 fax (954) 781-6523

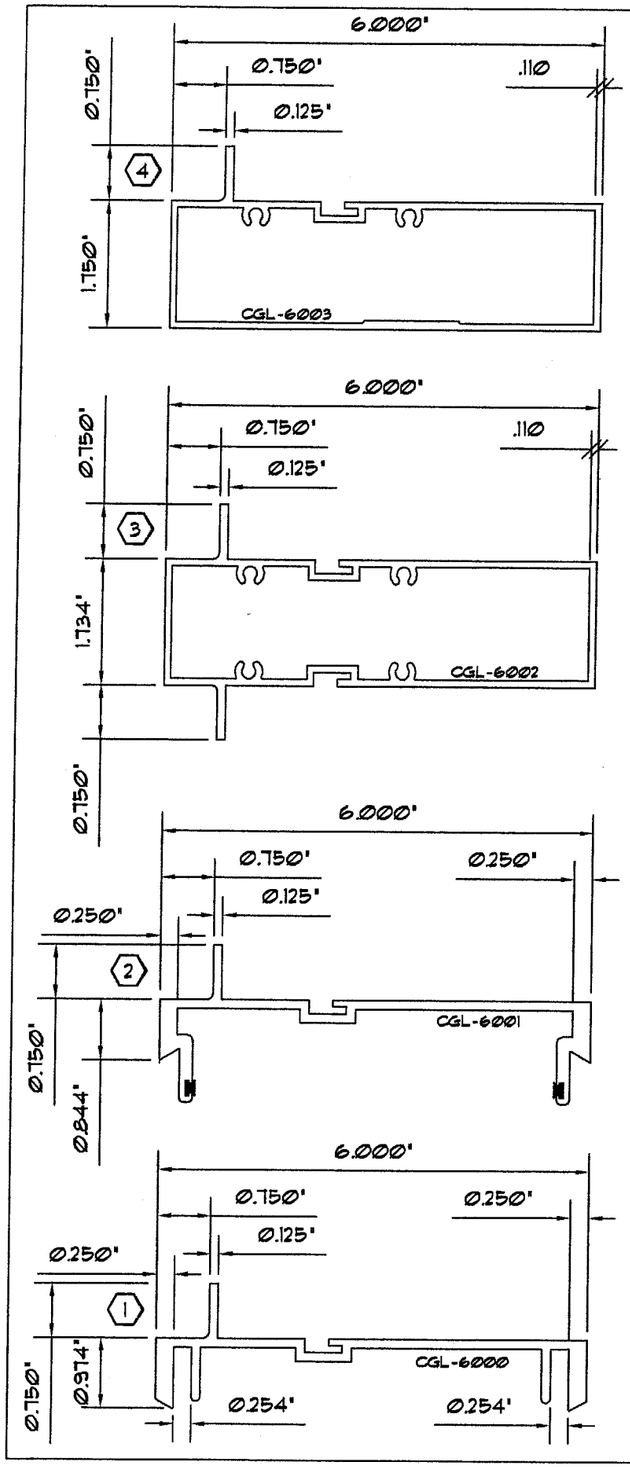

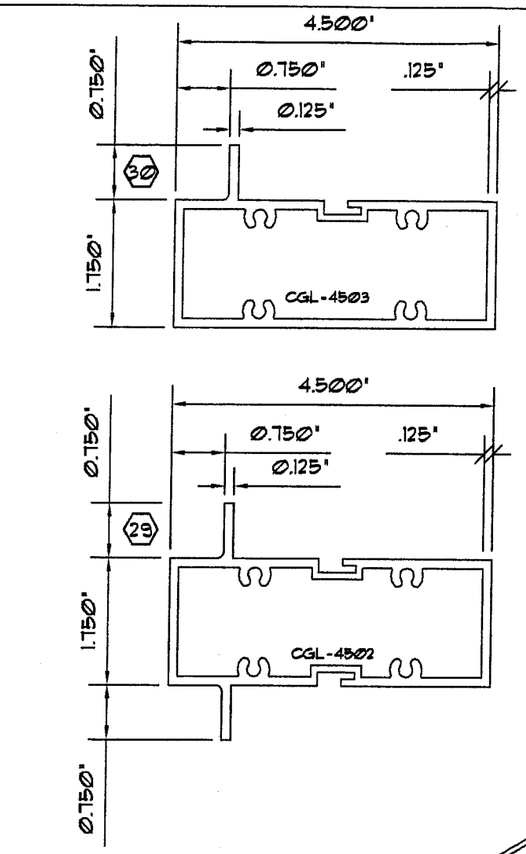

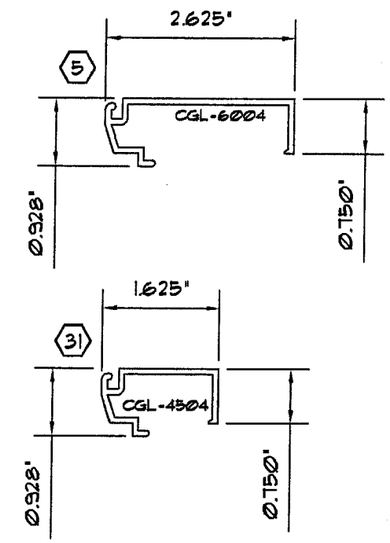

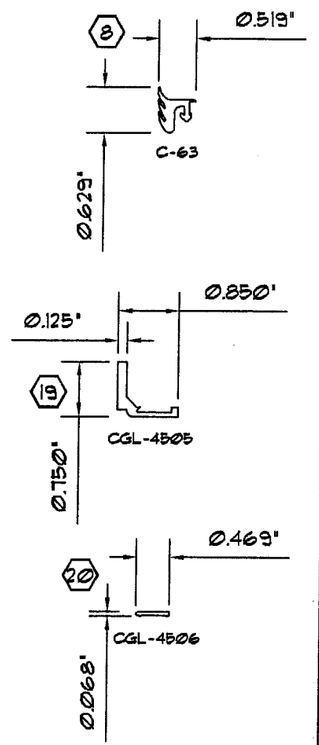

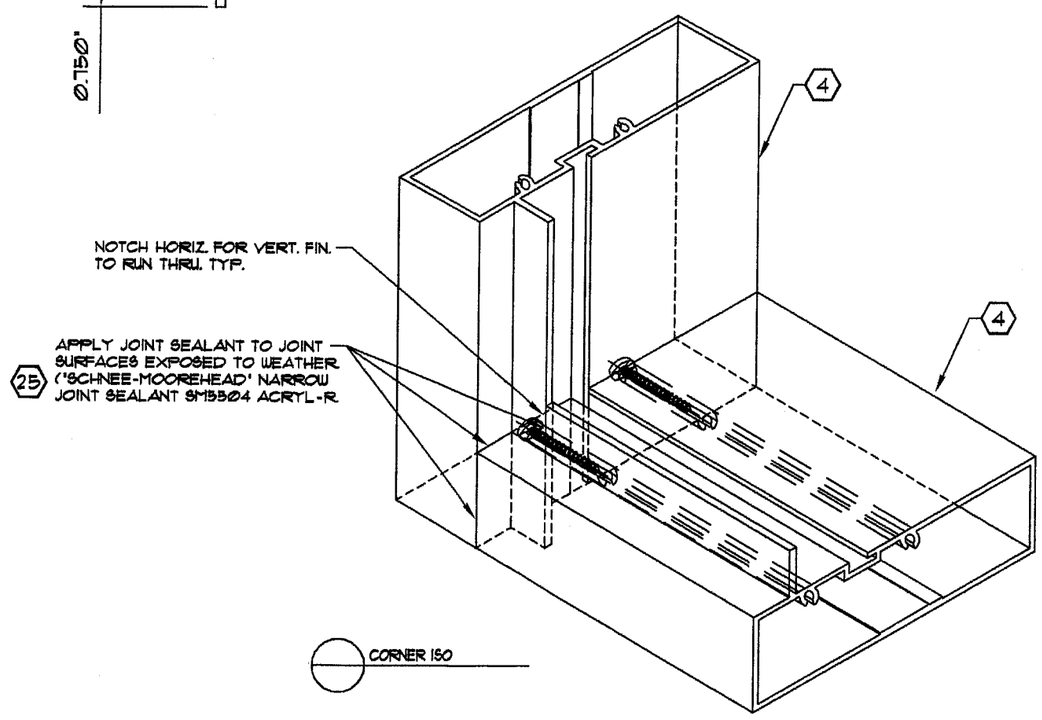

FOR METRO-DADE OFFICE USE ONLY.

Approved as complying with the Florida Building Code
Date MARCH 30, 2006
NOA# 05-1013.07
Miami Dade Product Control Division
By

SEAL:

ENGINEER:
SCOTT WOLTERS
FL PE# 62354
CUSTOM GLASS COMPANY
750 SW 14TH AVE
POMPANO BEACH, FL 33069

REVISIONS:
3 3/9/06
2 2/22/06
1

SCALE: N.T.S.
DRAWN BY: SW
DATE: 10/3/05

CGC
Custom Glass Company
Commercial Contractors
est. 1974

DRAWING TITLE: CGC-6000 SMALL MISSILE IMPACT RESISTANT SYSTEM
DWG. # 6000-SM1
PAGE TITLE:
PAGE NO. 11/11

750 Southwest 14th Avenue Pompano Beach, Florida 33069 ph.(954) 781-6565 fax (954) 781-6523