MIAMI-DADE COUNTY

BUILDING CODE COMPLIANCE OFFICE (BCCO)
PRODUCT CONTROL DIVISION

MIAMI-DADE COUNTY, FLORIDA
METRO-DADE FLAGLER BUILDING
140 WEST FLAGLER STREET, SUITE 1603
MIAMI, FLORIDA 33130-1563
(305) 375-2901 FAX (305) 375-2908
www.buildingcodeonline.com

NOTICE OF ACCEPTANCE (NOA)

Lawson Industries, Inc.
8501 NW 90th Street
Medley, FL 33166

SCOPE:

This NOA is being issued under the applicable rules and regulations governing the use of construction materials. The documentation submitted has been reviewed by Miami-Dade County Product Control Division and accepted by the Board of Rules and Appeals (BORA) to be used in Miami Dade County and other areas where allowed by the Authority Having Jurisdiction (AHJ).

This NOA shall not be valid after the expiration date stated below. The Miami-Dade County Product Control Division (In Miami Dade County) and/or the AHJ (in areas other than Miami Dade County) reserve the right to have this product or material tested for quality assurance purposes. If this product or material fails to perform in the accepted manner, the manufacturer will incur the expense of such testing and the AHJ may immediately revoke, modify, or suspend the use of such product or material within their jurisdiction. BORA reserves the right to revoke this acceptance, if it is determined by Miami-Dade County Product Control Division that this product or material fails to meet the requirements of the applicable building code.

This product is approved as described herein, and has been designed to comply with the Florida Building Code, including the High Velocity Hurricane Zone.

DESCRIPTION: Series "4000/6000" Aluminum Fixed Window - Non Impact

APPROVAL DOCUMENT: Drawing No. **L-4000/6000.01,** titled "Series 4000/6000 Aluminum Fixed Windows", sheets 1 through 11 of 11, prepared by Lawson Industries, Inc., dated 12/20/02 with revision dated 10/05/05, signed and sealed by Thomas J. Sotos, P.E., bearing the Miami-Dade County Product Control Revision stamp with the Notice of Acceptance number and expiration date by the Miami-Dade County Product Control Division.

MISSILE IMPACT RATING: None

LABELING: Each unit shall bear a permanent label with the manufacturer's name or logo, city, state and following statement: "Miami-Dade County Product Control Approved", unless otherwise noted herein.

RENEWAL of this NOA shall be considered after a renewal application has been filed and there has been no change in the applicable building code negatively affecting the performance of this product.

TERMINATION of this NOA will occur after the expiration date or if there has been a revision or change in the materials, use, and/or manufacture of the product or process. Misuse of this NOA as an endorsement of any product, for sales, advertising or any other purposes shall automatically terminate this NOA. Failure to comply with any section of this NOA shall be cause for termination and removal of NOA.

ADVERTISEMENT: The NOA number preceded by the words Miami-Dade County, Florida, and followed by the expiration date may be displayed in advertising literature. If any portion of the NOA is displayed, then it shall be done in its entirety.

INSPECTION: A copy of this entire NOA shall be provided to the user by the manufacturer or its distributors and shall be available for inspection at the job site at the request of the Building Official.

This NOA **revises and supersedes NOA # 03-0128.06** and consists of this page 1 and evidence pages E-1, E-2 and E-3, as well as approval document mentioned above.

The submitted documentation was reviewed by **Manuel Perez, P.E.**

PRODUCT CONTROL ACCEPTED

Lawson Industries, Inc.

NOTICE OF ACCEPTANCE: EVIDENCE SUBMITTED

A. DRAWINGS

1. Manufacturer's die drawings and sections.
2. Drawing No. **L-4000/6000.01,** titled "Series 4000/6000 Aluminum Fixed Windows", sheets 1 through 11 of 11, dated 12/20/02 with revision date on 10/05/05, prepared by Lawson Industries, Inc., signed and sealed by Thomas J. Sotos, P.E.

B. TESTS

1. Test reports on **1)** Air Infiltration Test, per FBC, TAS 202-94
   2) Uniform Static Air Pressure Test, Loading per FBC, TAS 202-94
   3) Water Resistance Test, per FBC, TAS 202-94
   4) Forced Entry Test, per FBC TAS 202-94
   along with marked-up drawings and installation diagram of an aluminum fixed window, prepared by Fenestration Testing Laboratory, Inc., Test Report No. **FTL-3619** dated 11/27/02, signed and sealed by Joseph Chan, P.E.
   "Submitted under NOA # 03-0128.06"
2. Test reports on **1)** Uniform Static Air Pressure Test, Loading per FBC,TAS 202-94 along with marked-up drawings and installation diagram of an aluminum fixed window w/ ¼" annealed glass, prepared by Fenestration Testing Laboratory, Inc., Test Report No. **FTL-3620** dated 11/27/02, signed and sealed by Joseph Chan, P.E.
   "Submitted under NOA # 03-0128.06"
3. Test reports on **1)** Uniform Static Air Pressure Test, Loading per FBC,TAS 202-94 along with marked-up drawings and installation diagram of an aluminum fixed window w / ½" insulated glass unit using two lites of 1/8" tempered glass, prepared by Fenestration Testing Laboratory, Inc., Test Report No. **FTL-3621** dated 11/27/02, signed and sealed by Joseph Chan, P.E.
   "Submitted under NOA # 03-0128.06"
4. Test reports on **1)** Uniform Static Air Pressure Test, Loading per FBC,TAS 202-94 along with marked-up drawings and installation diagram of an aluminum fixed window w / 5/8" insulated glass unit using two lites of 3/16" annealed glass, prepared by Fenestration Testing Laboratory, Inc., Test Report No. **FTL-3622** dated 11/27/02, signed and sealed by Joseph Chan, P.E.
   "Submitted under NOA # 03-0128.06"
5. Test reports on **1)** Uniform Static Air Pressure Test, Loading per FBC,TAS 202-94 along with marked-up drawings and installation diagram of an aluminum fixed window w/ 3/16" annealed glass, prepared by Fenestration Testing Laboratory, Inc., Test Report No. **FTL-3623** dated 11/27/02, signed and sealed by Joseph Chan, P.E.
   "Submitted under NOA # 03-0128.06"

Manuel Perez

Manuel Perez P.E.
Product Control Examiner
NOA No 03-0128.06
Expiration Date: May 08, 2008
Approval Date: May 25, 2006

NOTICE OF ACCEPTANCE: EVIDENCE SUBMITTED

6. Test reports on **1)** Uniform Static Air Pressure Test, Loading per FBC,TAS 202-94 along with marked-up drawings and installation diagram of an aluminum fixed window w/ 1/8" annealed glass, prepared by Fenestration Testing Laboratory, Inc., Test Report No. **FTL-3624** dated 11/27/02, signed and sealed by Joseph Chan, P.E. ***"Submitted under NOA # 03-0128.06"***
5. Test reports on **1)** Uniform Static Air Pressure Test, Loading per FBC,TAS 202-94 along with marked-up drawings and installation diagram of an aluminum fixed window w / ½" insulated glass unit using two lites of 1/8" annealed glass, prepared by Fenestration Testing Laboratory, Inc., Test Report No. **FTL-3625** dated 11/27/02, signed and sealed by Joseph Chan, P.E. ***"Submitted under NOA # 03-0128.06"***
6. Test reports on **1)** Uniform Static Air Pressure Test, Loading per FBC,TAS 202-94 along with marked-up drawings and installation diagram of an aluminum fixed window w / 3/16" tempered glass, prepared by Fenestration Testing Laboratory, Inc., Test Report No. **FTL-3626** dated 11/27/02, signed and sealed by Joseph Chan, P.E. ***"Submitted under NOA # 03-0128.06"***
7. Test reports on **1)** Air Infiltration Test, per FBC, TAS 202-94
   2) Uniform Static Air Pressure Test, Loading per FBC, TAS 202-94
   3) Water Resistance Test, per FBC, TAS 202-94
   4) Forced Entry Test, per FBC TAS 202-94

   along with marked-up drawings and installation diagram of an aluminum fixed window w/ ¼" tempered glass, prepared by Fenestration Testing Laboratory, Inc., Test Report No. **FTL 3627** dated 11/27/02, signed and sealed by Joseph Chan, P.E. ***"Submitted under NOA # 03-0128.06"***

C. CALCULATIONS

1. Revised Anchor Calculations and structural analysis complying with FBC 2004, dated 01/02/03, prepared by manufacturer, signed and sealed by Thomas J. Sotos, P.E. **Complies with ASTM E1300-02**

D. QUALITY ASSUSURANCE

1. Miami Dade Building Code Compliance Office (BCCO).

Manuel Perez P.E.
Product Control Examiner
NOA No 03-0128.06
Expiration Date: May 08, 2008
Approval Date: May 25, 2006

NOTICE OF ACCEPTANCE: EVIDENCE SUBMITTED

E. MATERIAL CERTIFICATIONS

1. None

F. STATEMENTS

1. Statement letter of conformance, dated 10/15/05, signed and sealed by Thomas J. Sotos, P.E.
2. Statement letter of no financial interest, dated 1/6/03, signed and sealed by Thomas J. Sotos, P.E.
   "Submitted under NOA # 03-0128.06"

G. OTHER

1. Notice of Acceptance **No.03-0128.06**, issued to Lawson Industries Inc., for Series 4000/6000 Aluminum Fixed Window, dated 05/08/03 and expiring on 05/08/08.

Manuel Perez P.E.
Product Control Examiner
NOA No 03-0128.06
Expiration Date: May 08, 2008
Approval Date: May 25, 2006

SERIES: 4000/6000 – APPROVED WINDOW ELEVATIONS (NON-IMPACT)

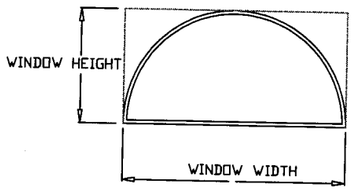

HALF-ROUND TYPICAL ELEVATION

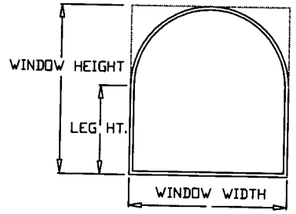

ARCHED PICTURE WINDOW

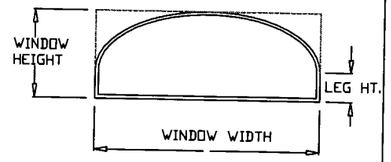

EYEBROW ELEVATION

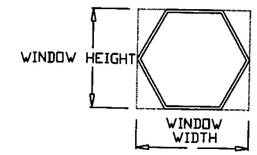

HEXAGON TYPICAL ELEVATION

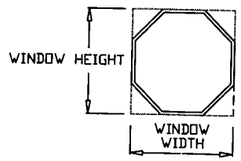

OCTAGON TYPICAL ELEVATION

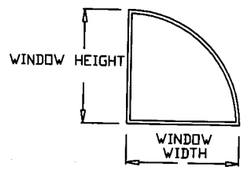

QUARTER-ROUND ELEVATION

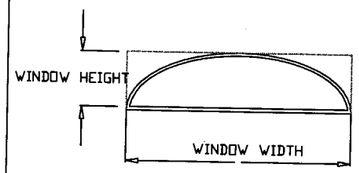

"ELLIPTICAL" TYPICAL ELEVATION

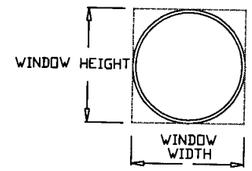

FULL ROUND TYPICAL ELEVATION

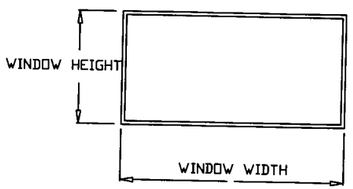

RECTANGULAR TYPICAL ELEVATION

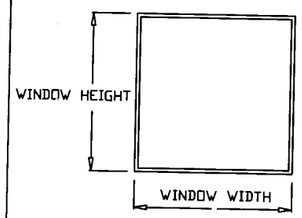

SQUARE PICTURE WINDOW ELEVATION

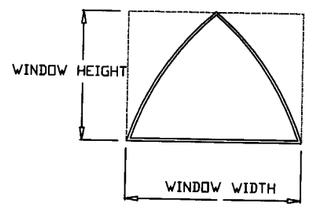

GOTHIC ARCH ELEVATION

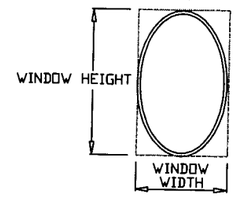

OVAL TYPICAL ELEVATION

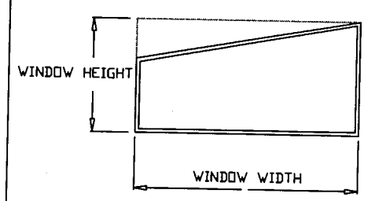

TRAPEZOID TYPICAL ELEVATION

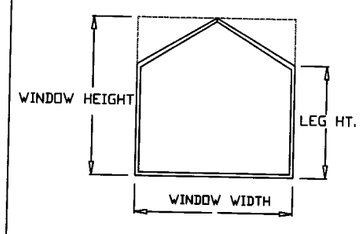

PENTAGON WINDOW ELEVATION

ALLOWABLE LOADS FOR ALTERNATE SHAPES AS SHOWN, CAN BE VERIFIED BY INSCRIBING PICTURE WINDOW SHAPE WITHIN A SQUARE OR RECTANGLE, AS SHOW IN DOTTED LINES AND OBTAINING ALLOWABLE LOADS FROM THOSE SHAPES. PROVIDED PERIMETER FASTENERS ARE AS DESCRIBED HEREIN FOR SIZE AND SPACING.

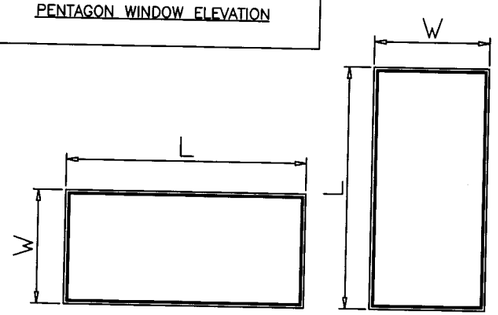

NOTE:
WIDTH AND LENGTH DIMENSIONS CAN BE ORIENTED VERTICALLY OR HORIZONTALLY AS SHOWN ABOVE.

General Notes:

1.) THIS WINDOW SYSTEM IS DESIGNED AND TESTED TO COMPLY WITH THE REQUIREMENTS OF THE 2004 FLORIDA BUILDING CODE AND ASTM 1300-02. THIS PRODUCT IS NOT IMPACT RESISTANT. WINDOWS ARE TO BE PROTECTED WITH MIAMI-DADE COUNTY APPROVED IMPACT RESISTANT SHUTTERS.

2.) 1 X OR 2 X WOOD BUCKS SHALL BE INSTALLED AND ANCHORED SO THAT THE BUILDING RESISTS THE SUPERIMPOSED LOADS IN ACCORDANCE WITH REQUIREMENTS OF 2004 F.B.C. & TO BE REVIEWED BY BUILDING OFFICIAL.

3.) ANCHORS SHOWN ON TYPICAL ELEVATIONS ARE AS PER TEST UNITS. ON CENTER (O.C.) ANCHOR SPACINGS WILL VARY WITH UNIT DIMENSIONS, AND THE NUMBER OF ANCHORS REQUIRED, AS SPECIFIED ON THE LOAD TABLES.

4.) ANCHOR CONDITIONS NOT DESCRIBED IN THESE DRAWING'S ARE TO BE ENGINEERED ON A SITE SPECIFIC BASIS, UNDER SEPARATE APPROVAL AND TO BE REVIEWED BY BUILDING OFFICIAL.

5.) WINDOWS ARE QUALIFIED FOR USE WITH SINGLE GLAZE GLASS TYPES TABULATED HEREIN (SEE SHEETS #4, 5, 8, 10, & 11).

6.) WINDOWS ARE QUALIFIED FOR USE WITH DOUBLE GLAZE GLASS TYPES TABULATED HEREIN (SEE SHEETS #6, 7, & 9).

7.) FALSE COLONIAL MUNTINS MAY BE USED & APPLIED TO THE GLASS WITH CLEAR SILICONE AND MAY BE PLACED AT INTERIOR AND/OR EXTERIOR SIDES OF GLASS.

WINDOW FRAME EXTRUSION DETAILS

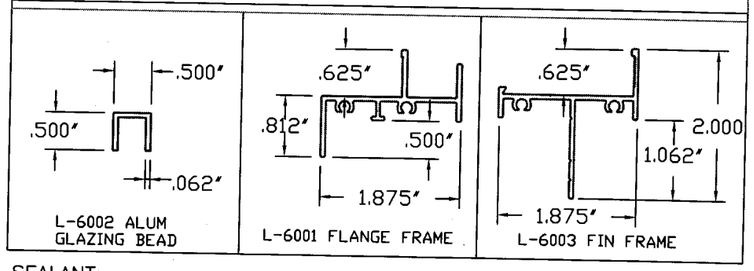

SEALANT:

FRAME CORNERS, OR JOINTS SEALED WITH A COLORED SEALANT AND PERIMETER OF GLAZING BEAD WITH CLEAR SILICONE

WINDOWS TO BE PROTECTED WITH DADE COUNTY APPROVED IMPACT RESISTANT SHUTTERS

PRODUCT REVISED
as complying with the Florida Building Code
Acceptance No. 05-1109.03
Expiration Date MAY 8, 2008
By Manuel Perez
Miami-Dade Product Control Division

THOMAS J. SOTOS
PROFESSIONAL ENGINEER
FL LIC. # 55225

DATE

Revision Notes:
AS PER 2004 FBC REQUIREMENTS

Revised By:	Nelson Erazo	Date Revised:	10/05/2005
Drawn By:	Larry Magee	Date Drawn:	12/20/2002

LAWSON INDUSTRIES, INC.
MANUFACTURER OF QUALITY ALUMINUM WINDOWS AND GLASS DOORS

8501 NW 90th St.
MEDLEY, FLORIDA 33166
(305) 696-8660

SERIES: 4000 / 6000 ALUMINUM FIXED WINDOWS

FLANGE & FIN FRAME WINDOW DETAILS, ELEVATIONS, SHAPES & GENERAL INSTALLATION NOTES.

Scale:	Drawing Number:	Revision Level:	Sheet:
AS NOTED	L-4000/6000.01	B	1 of 11

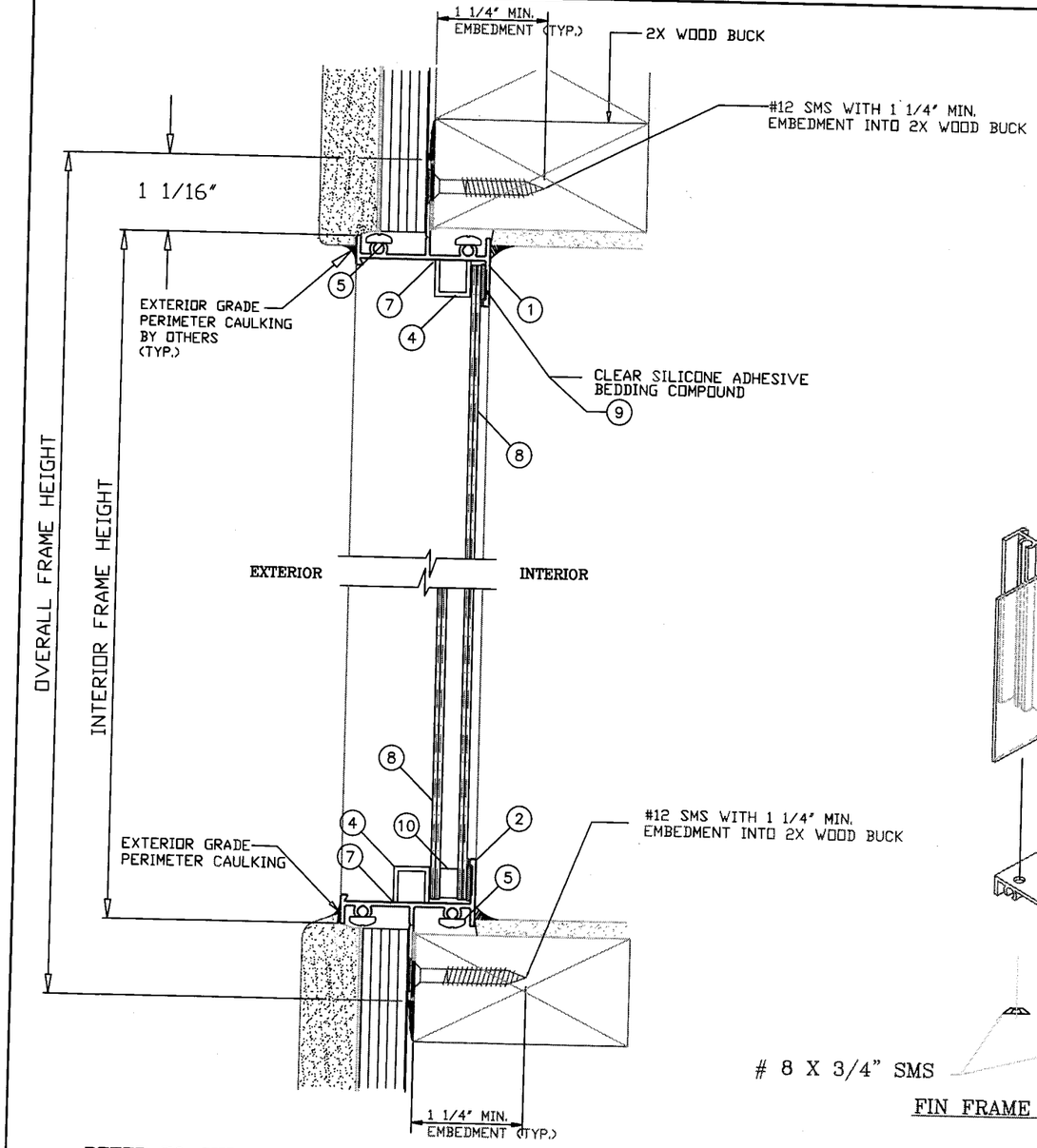

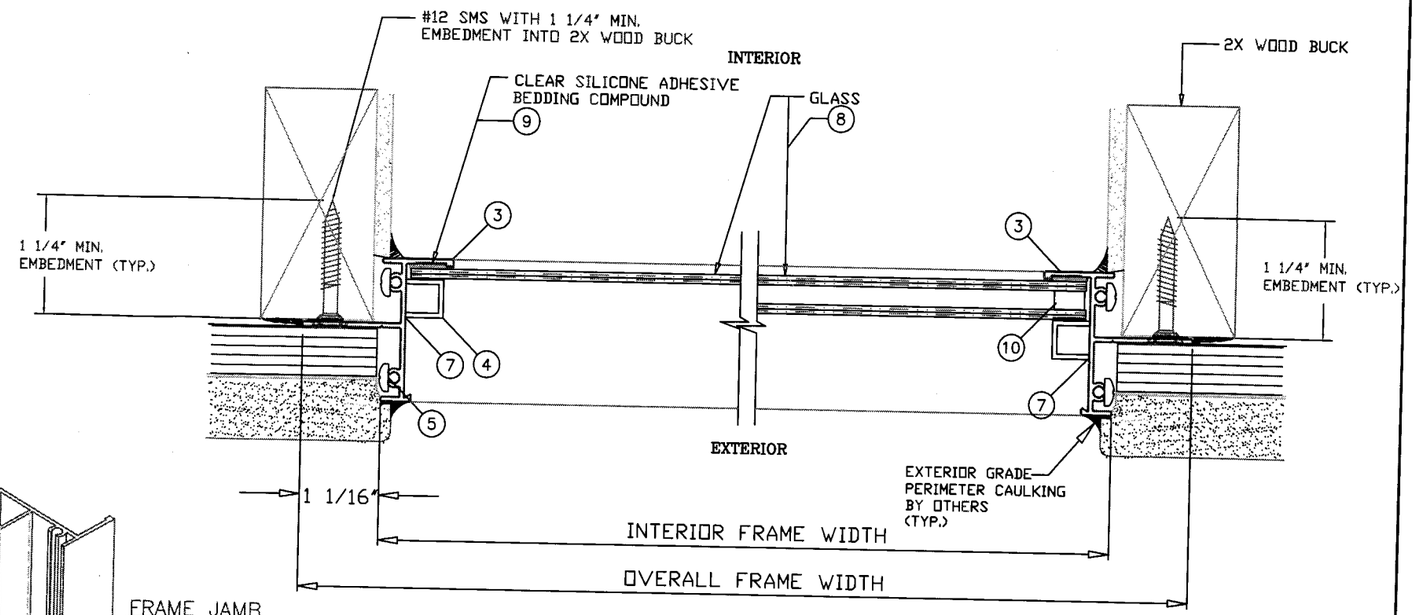

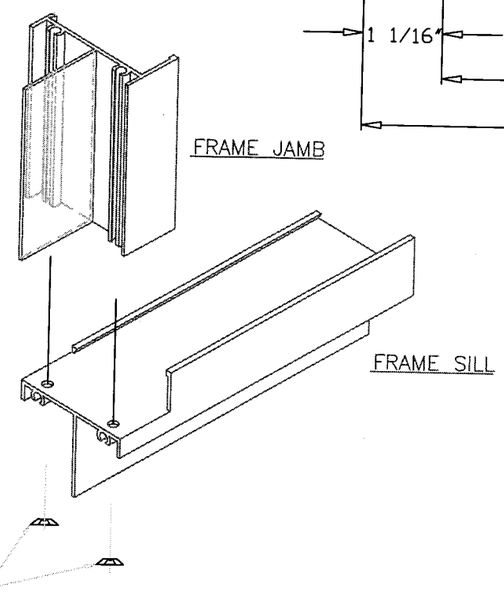

FIN FRAME CORNER DETAIL

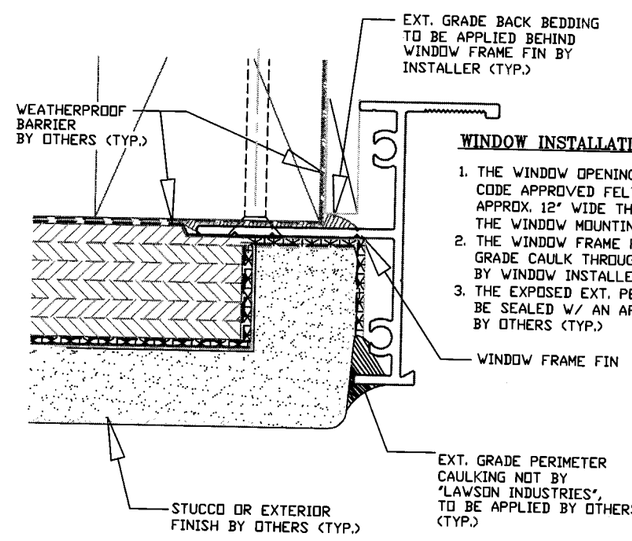

FIN WINDOW INSTALLATION DETAIL

WINDOW INSTALLATION NOTES:

1. THE WINDOW OPENING MUST BE PROTECTED WITH A CODE APPROVED FELT OR MOISTURE/WEATHER BARRIER, APPROX. 12" WIDE THROUGHOUT ENTIRE PERIMETER OF THE WINDOW MOUNTING FIN. (NOT BY LAWSON INDUSTRIES)
2. THE WINDOW FRAME FIN TO BE BACK-BEDDED W/ AN EXT. GRADE CAULK THROUGHOUT THE ENTIRE PERIMETER OF FIN BY WINDOW INSTALLER (TYP.)
3. THE EXPOSED EXT. PERIMETER OF THE WINDOW FRAME TO BE SEALED W/ AN APPROVED EXTERIOR GRADE CAULK BY OTHERS (TYP.)

REFER TO SHEET # 1 OF 11 FOR GENERAL NOTES

BILL OF MATERIALS

ITEM #	PART #	REQD.	DESCRIPTION	REMARKS
1	L-6003	1	FRAME HEAD	6063-T5 ALUMINUM
2	L-6003	1	FRAME SILL	6063-T5 ALUMINUM
3	L-6003	2	FRAME JAMB	6063-T5 ALUMINUM
4	L-6002	AS REQ'D.	ALUM. GLAZING BEAD	6063-T5 ALUMINUM
5	FS-006	AS REQ'D.	FRAME ASSEMBLY SCREWS	#8 X 3/4" P.H. PHILLIPS
6	*	AS REQD.	INSTALLATION SCREWS	#12 SMS X 1 1/2" F.H./PHIL.
7	*	AS REQ'D.	JOINT SEALANT	'Purvis Co.' Super Seal
8	*	1	GLASS	SEE CHART
9	*	AS REQ'D.	NEUTRAL CURE SILICONE	SM -5731 IR DC-899
10	774-25B-767	AS REQ'D.	'TrueSeal' Swiggle Seal	Black w/ 1/4" air space

PRODUCT REVISED
as complying with the Florida Building Code
Acceptance No. 05-1019.03
Expiration Date MAY 8, 2008
By Miami Dade Product Control Division

THOMAS J. SOTOS
PROFESSIONAL ENGINEER
FL LIC. # 55225

DATE

Revision Notes:
AS PER 2004 FBC REQUIREMENTS

Revised By:	Nelson Erazo	Date Revised:	10/05/2005
Drawn By:	Larry Magee	Date Drawn:	12/20/2002
		Scale:	AS NOTED

LAWSON INDUSTRIES, INC.
8501 NW 90th St.
MEDLEY, FLORIDA 33166
(305) 696-8660

MANUFACTURER OF QUALITY ALUMINUM WINDOWS AND GLASS DOORS

Draw Class:	Part Class:	Prod Category:	Series/Model:	Item:	Sheet:
LAYOUT					2 of 11

SERIES: 4000/6000 ALUMINUM FIXED WINDOWS
FIN FRAME WINDOW INSTALLATION DETAILS, B.O.M. & NOTES

Part Number:	Drawing Number:	Revision Level:
	L-4000/6000.01	B

(*) WHEN THE GAP BETWEEN THE WINDOW FRAME AND THE BUCK IS LESS THAN 1/8", SHIMS ARE NOT REQUIRED.

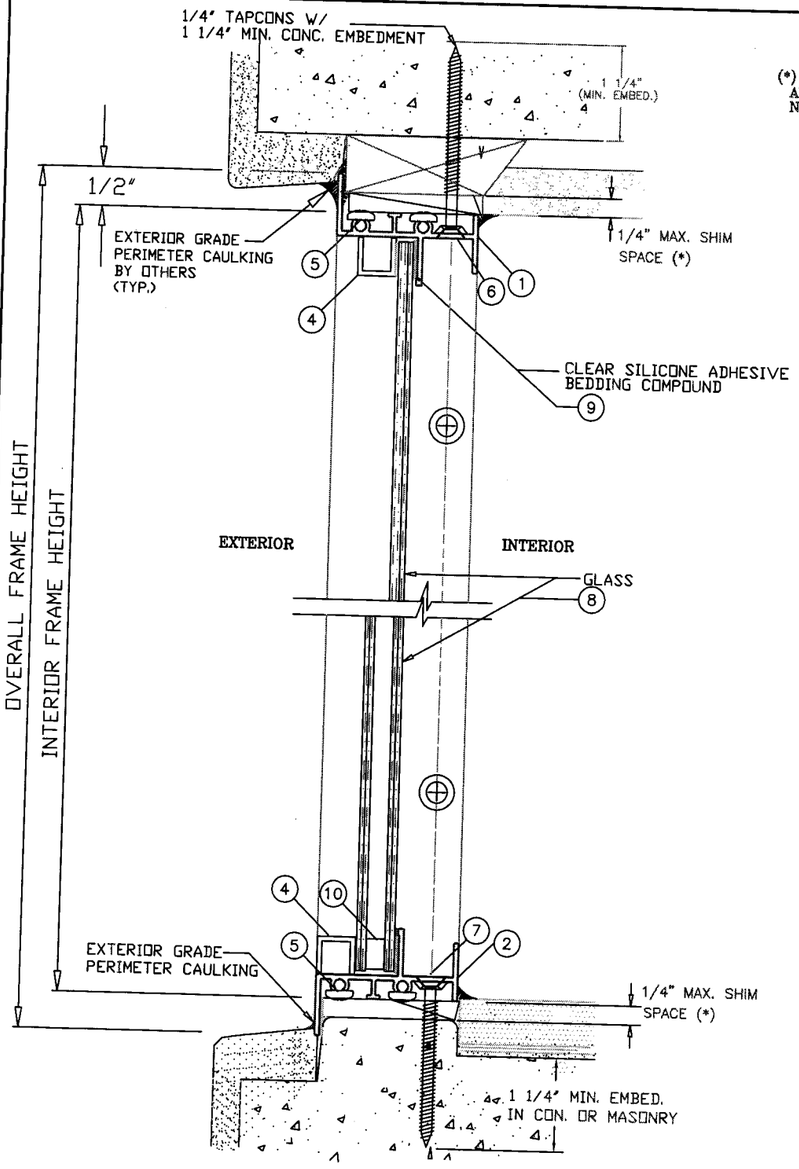

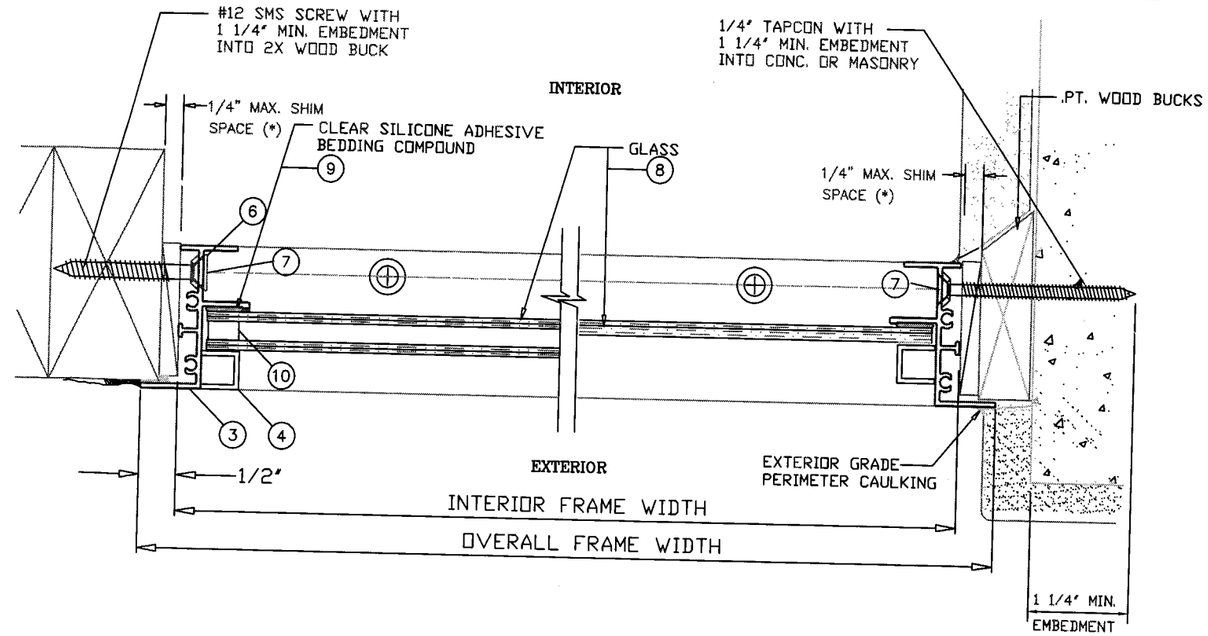

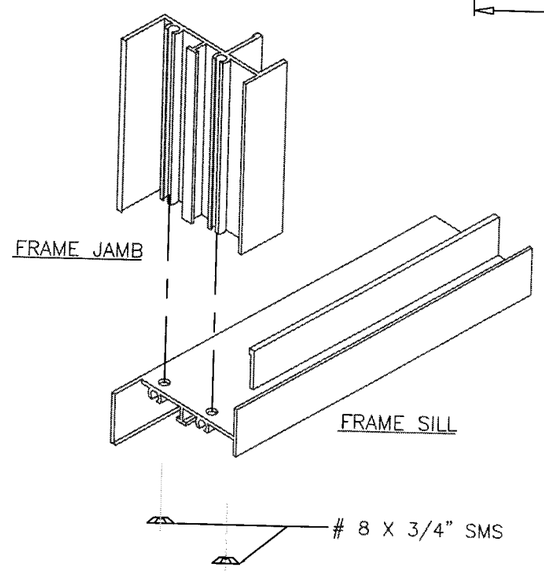

FLANGE FRAME CORNER DETAIL

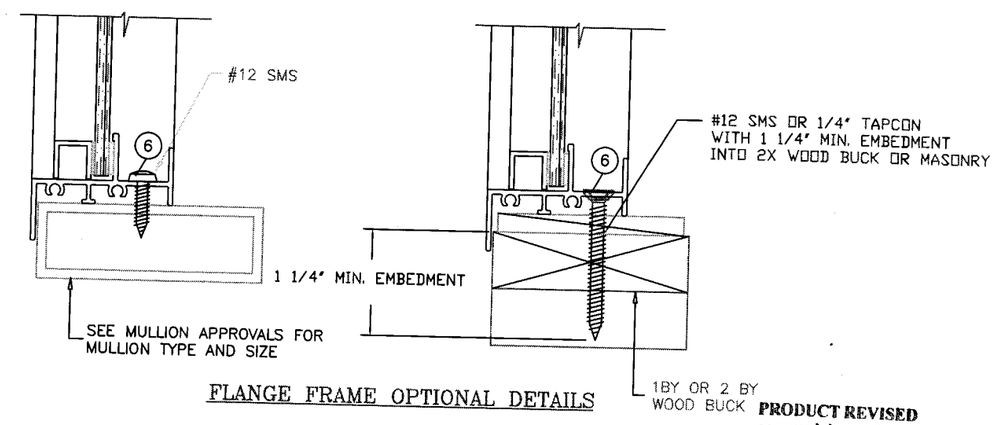

FLANGE FRAME OPTIONAL DETAILS

REFER TO SHEET # 1 OF 11 FOR GENERAL NOTES

BILL OF MATERIALS

ITEM #	PART #	REQD.	DESCRIPTION	REMARKS
1	L-6001	1	FRAME HEAD	6063-T5 ALUMINUM
2	L-6001	1	FRAME SILL	6063-T5 ALUMINUM
3	L-6001	2	FRAME JAMB	6063-T5 ALUMINUM
4	L-6002	AS REQ'D.	ALUM. GLAZING BEAD	6063-T5 ALUMINUM
5	FS-006	AS REQ'D.	FRAME ASSEMBLY SCREWS	#8 X 3/4" P.H. PHILLIPS
6	*	AS REQD.	INSTALLATION SCREWS	#12 SMS OR 1/4" TAPCON
7	*	AS REQ'D.	JOINT SEALANT	'Purvis Co.' Super Seal
8	*	1	GLASS	SEE CHART
9	*	AS REQ'D.	NEUTRAL CURE SILICONE	SM-5731 OR DC-899
10	774-25B-767	AS REQ'D.	'TrueSeal' Swiggle Seal	Black w/ 1/4" air space

PRODUCT REVISED
as complying with the Florida Building Code
Acceptance No. 05-1019.03
Expiration Date MAY 8, 2008
By Manuel Perez
Miami Dade Product Control Division

THOMAS J. SOTOS
PROFESSIONAL ENGINEER
FL LIC. # 55225

DATE

Revision Notes:
AS PER 2004 FBC REQUIREMENTS

Revised By:	Nelson Erazo	Date Revised:	10/05/2005
Drawn By:	Larry Magee	Date Drawn:	12/20/2002
		Scale:	AS NOTED

LAWSON INDUSTRIES, INC.
8501 NW 90th St.
MEDLEY, FLORIDA 33166
(305) 696-8660
MANUFACTURER OF QUALITY ALUMINUM WINDOWS AND GLASS DOORS

Draw Class:	Part Class:	Prod Category:	Series/Model:	Item:	Sheet:
LAYOUT					3 of 11

SERIES: 4000/6000 ALUMINUM FIXED WINDOWS
FLANGE FRAME WINDOW INSTALLATION DETAILS, B.O.M. & NOTES

Part Number:	Drawing Number:	Revision Level:
	L-4000/6000.01	B

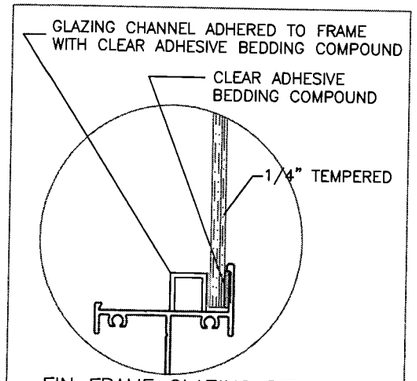

FIN FRAME GLAZING DETAIL

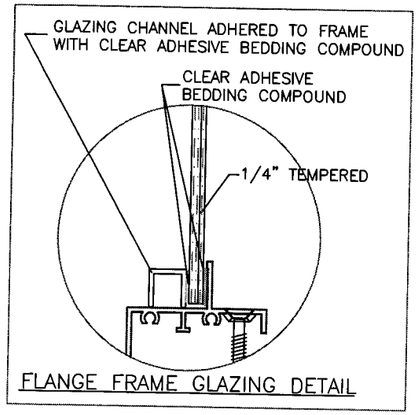

FLANGE FRAME GLAZING DETAIL

WINDOW COMPARATIVE ANALYSIS CHART FOR 1/4" TEMPERED

Window Size		FIN FRAME		DESIGN LOAD CAPACITY - (PFS)	
HEIGHT INCHES	WIDTH INCHES	QTY OF ANCHORS	AVG. ANCHOR SPACING (IN)	POSITIVE	NEGATIVE
24	18	10	8	100.0	100.0
36	18	14	7	100.0	100.0
48	18	19	6	100.0	100.0
60	18	23	6	100.0	100.0
72	18	28	6	100.0	100.0
84	18	32	6	100.0	100.0
96	18	37	6	100.0	100.0
108	18	41	6	100.0	100.0
120	18	46	6	100.0	100.0
132	18	50	6	100.0	100.0
144	18	55	5	100.0	100.0
148	18	57	5	100.0	100.0
156	18	60	5	100.0	100.0
24	24	13	7	100.0	100.0
36	24	19	6	100.0	100.0
48	24	25	5	100.0	100.0
60	24	31	5	100.0	100.0
72	24	37	5	100.0	100.0
84	24	43	5	100.0	100.0
96	24	49	4	100.0	100.0
108	24	55	4	100.0	100.0
120	24	61	4	100.0	100.0
132	24	67	4	100.0	100.0
144	24	73	4	100.0	100.0
148	24	75	4	100.0	100.0
156	24	79	4	100.0	100.0
24	30	16	6	100.0	100.0
36	30	23	5	100.0	100.0
48	30	31	5	100.0	100.0
60	30	38	4	100.0	100.0
72	30	46	4	100.0	100.0
84	30	54	4	100.0	100.0
96	30	61	4	100.0	100.0
108	30	69	4	100.0	100.0
120	30	76	3	100.0	100.0
132	30	84	3	100.0	100.0
144	30	91	3	100.0	100.0
148	30	94	3	100.0	100.0
156	30	99	3	100.0	100.0

WINDOW COMPARATIVE ANALYSIS CHART FOR 1/4" TEMPERED

Window Size		FIN FRAME		DESIGN LOAD CAPACITY - (PFS)	
HEIGHT INCHES	WIDTH INCHES	QTY OF ANCHORS	AVG. ANCHOR SPACING (IN)	POSITIVE	NEGATIVE
24	36	19	6	100.0	100.0
36	36	28	5	100.0	100.0
48	36	37	4	100.0	100.0
60	36	46	4	100.0	100.0
72	36	55	3	100.0	100.0
84	36	64	3	100.0	100.0
96	36	73	3	100.0	100.0
108	36	82	3	100.0	100.0
120	36	91	3	100.0	100.0
132	36	100	3	100.0	100.0
144	36	110	3	100.0	100.0
148	36	113	3	100.0	100.0
156	36	119	3	100.0	100.0
24	48	25	5	100.0	100.0
36	48	37	4	100.0	100.0
48	48	49	3	100.0	100.0
60	48	61	3	100.0	100.0
72	48	73	3	100.0	100.0
84	48	85	3	100.0	100.0
96	48	97	2	100.0	100.0
108	48	110	2	100.0	100.0
120	48	113	2	93.1	93.1
132	48	111	3	83.2	83.2
144	48	114	3	78.3	78.3
148	48	115	3	76.7	76.7
156	48				
24	60	31	5	100.0	100.0
36	60	46	4	100.0	100.0
48	60	61	3	100.0	100.0
60	60	76	3	100.0	100.0
72	60	91	2	100.0	100.0
84	60	107	2	100.0	100.0
96	60	122	2	100.0	100.0
108	60	137	2	100.0	100.0
120	60	139	2	91.6	91.6
132	60				
144	60				
148	60				
156	60				

WINDOW COMPARATIVE ANALYSIS CHART FOR 1/4" TEMPERED

Window Size		FIN FRAME		DESIGN LOAD CAPACITY - (PFS)	
HEIGHT INCHES	WIDTH INCHES	QTY OF ANCHORS	AVG. ANCHOR SPACING (IN)	POSITIVE	NEGATIVE
24	72	37	5	100.0	100.0
36	72	55	3	100.0	100.0
48	72	73	3	100.0	100.0
60	72	91	2	100.0	100.0
72	72	110	2	100.0	100.0
84	72	128	2	100.0	100.0
96	72	143	2	98.2	98.2
108	72				
120	72				
132	72				
144	72				
148	72				
156	72				
24	84	43	5	100.0	100.0
36	84	64	3	100.0	100.0
48	84	85	3	100.0	100.0
60	84	107	2	100.0	100.0
72	84	128	2	100.0	100.0
84	84	149	2	100.0	100.0
96	84				
108	84				
120	84				
132	84				
144	84				
148	84				
156	84				
19.125	26	11	8	100.0	100.0
26.5	26	15	7	100.0	100.0
37	26	21	6	100.0	100.0
53.125	26	30	5	100.0	100.0
19.125	38.375	16	7	100.0	100.0
26.5	38.375	22	5	100.0	100.0
37	38.375	30	5	100.0	100.0
53.125	38.375	43	4	100.0	100.0
19.125	50.625	21	6	100.0	100.0
26.5	50.625	29	5	100.0	100.0
37	50.625	40	4	100.0	100.0
53.125	50.625	57	3	100.0	100.0
19.125	58	24	6	100.0	100.0
26.5	58	33	5	100.0	100.0
37	58	46	4	100.0	100.0
53.125	58	65	3	100.0	100.0
19.125	63	26	6	100.0	100.0
26.5	63	36	4	100.0	100.0
37	63	50	4	100.0	100.0
53.125	63	71	3	100.0	100.0
19.125	74.25	30	6	100.0	100.0
26.5	74.25	42	4	100.0	100.0
37	74.25	58	3	100.0	100.0
53.125	74.25	84	3	100.0	100.0

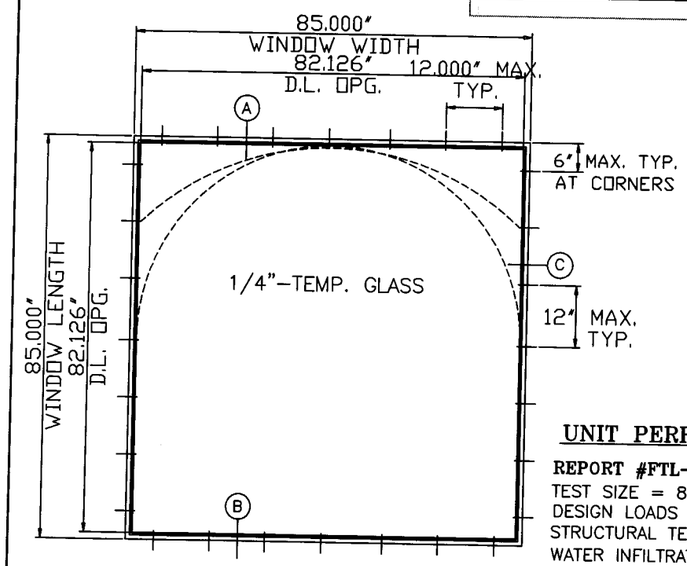

TYPICAL ELEVATION
TESTED UNIT

WINDOW FRAME SIZE NOTE:

1. THE WINDOW SIZE SHOWN ON CHARTS ARE FOR THE FLANGE WINDOW EXTERIOR OVERALL DIMENSION.
2. ADD 1 1/8" TO THE FLANGE WINDOW SIZE TO DETERMINE THE FIN WINDOW EXTERIOR OVERALL DIMENSION.

FLANGE FRAME ANCHORS ARE TO BE SPACED NOT GREATER THAN 6" FROM EACH CORNER, AND NOT GREATER THAN 12" CENTER TO CENTER. FIN FRAME ANCHORS SPACED AS TABULATED ABOVE.

PRODUCT REVISED
as complying with the Florida Building Code
Acceptance No. 05-1019.03
Expiration Date MAY 8, 2008
By Manuel Perez
Miami Dade Product Control Division

UNIT PERFORMANCE DATA

REPORT #FTL-3619

TEST SIZE = 85" wide X 85" hi (O)
DESIGN LOADS = +104.0, -104.0 PSF (PA-202)
STRUCTURAL TEST LOAD = +156.0, -156.0 PSF
WATER INFILTRATION TEST = 18.0 PSF
DAYLIGHT OPENING = 82 1/8" wide X 82 1/8" hi
TESTED GLASS = 1/4" TEMPERED GLASS

THOMAS J. SOTOS
PROFESSIONAL ENGINEER
FL LIC. # 55225

DATE

Revision Notes:
AS PER 2004 FBC REQUIREMENTS

Revised By:	Nelson Erazo	Date Revised:	10/05/2005
Drawn By:	Larry Magee	Date Drawn:	12/20/2002
		Scale:	AS NOTED

LAWSON INDUSTRIES, INC.
8501 NW 90th St.
MEDLEY, FLORIDA 33166
(305) 696-8660
MANUFACTURER OF QUALITY ALUMINUM WINDOWS AND GLASS DOORS

Draw Class:	Part Class:	Prod Category:	Series/Model:	Item:	Sheet:
LAYOUT					4 of 11

SERIES: 4000/6000 ALUMINUM FIXED WINDOWS
FIN/FLANGE FRAME WINDOW COMPARATIVE ANALYSIS & NOTES
1/4" TEMPERED GLASS

Part Number:	Drawing Number:	Revision Level:
	L-4000/6000.01	B

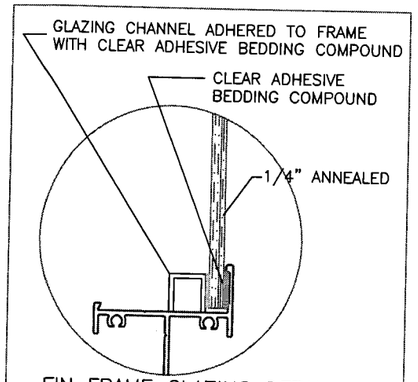

FIN FRAME GLAZING DETAIL

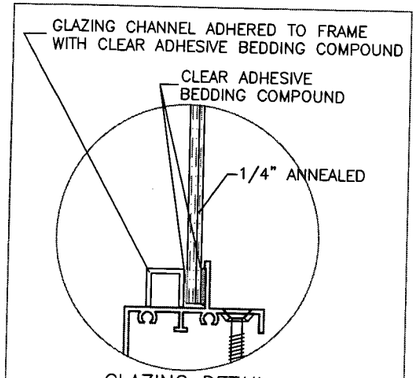

GLAZING DETAIL

WINDOW COMPARATIVE ANALYSIS CHART FOR 1/4" ANNEALED

Window Size		FIN FRAME		DESIGN LOAD CAPACITY - (PFS)	
HEIGHT INCHES	WIDTH INCHES	QTY OF ANCHORS	AVG. ANCHOR SPACING (IN)	POSITIVE	NEGATIVE
24	18	10	8	100.0	100.0
36	18	14	7	100.0	100.0
48	18	18	7	97.2	97.2
60	18	22	7	92.9	92.9
72	18	25	7	90.3	90.3
84	18	29	7	88.5	88.5
96	18	32	7	87.2	87.2
108	18	36	7	86.2	86.2
120	18	39	7	85.4	85.4
132	18	43	6	84.8	84.8
144	18	46	7	84.3	84.3
148	18	48	6	84.1	84.1
156	18	50	6	83.8	83.8
24	24	13	7	100.0	100.0
36	24	17	7	88.9	88.9
48	24	20	7	79.0	79.0
60	24	23	7	74.1	74.1
72	24	26	7	71.1	71.1
84	24	30	7	69.1	69.1
96	24	33	7	67.7	67.7
108	24	37	7	66.7	66.7
120	24	40	7	65.8	65.8
132	24	44	7	65.2	65.2
144	24	48	7	64.6	64.6
148	24	49	7	64.5	64.5
156	24				
24	30	15	7	98.8	98.8
36	30	19	6	81.3	81.3
48	30	21	7	68.9	68.9
60	30	24	7	63.2	63.2
72	30	28	7	59.9	59.9
84	30	31	7	57.7	57.7
96	30	34	7	55.4	55.4
108	30	36	7	52.5	52.5
120	30	39	7	51.2	51.2
132	30				
144	30				
148	30				
156	30				

WINDOW COMPARATIVE ANALYSIS CHART FOR 1/4" ANNEALED

Window Size		FIN FRAME		DESIGN LOAD CAPACITY - (PFS)	
HEIGHT INCHES	WIDTH INCHES	QTY OF ANCHORS	AVG. ANCHOR SPACING (IN)	POSITIVE	NEGATIVE
24	36	17	7	88.9	88.9
36	36	22	6	79.0	79.0
48	36	23	7	63.2	63.2
60	36	26	7	56.4	56.4
72	36	28	7	50.1	50.1
84	36	28	8	43.2	43.2
96	36	29	9	39.5	39.5
108	36				
120	36				
132	36				
144	36				
148	36				
156	36				
24	48	20	7	79.0	79.0
36	48	23	7	63.2	63.2
48	48	29	6	59.3	59.3
60	48	30	7	49.4	49.4
72	48	33	7	44.4	44.4
84	48				
96	48				
108	48				
120	48				
132	48				
144	48				
148	48				
156	48				
24	60	23	7	74.1	74.1
36	60	26	7	56.4	56.4
48	60	30	7	49.4	49.4
60	60	36	6	47.4	47.4
72	60				
84	60				
96	60				
108	60				
120	60				
132	60				
144	60				
148	60				
156	60				

WINDOW COMPARATIVE ANALYSIS CHART FOR 1/4" ANNEALED

Window Size		FIN FRAME		DESIGN LOAD CAPACITY - (PFS)	
HEIGHT INCHES	WIDTH INCHES	QTY OF ANCHORS	AVG. ANCHOR SPACING (IN)	POSITIVE	NEGATIVE
24	72	26	7	71.1	71.1
36	72	28	7	50.1	50.1
48	72	33	7	44.4	44.4
60	72				
72	72				
84	72				
96	72				
108	72				
120	72				
132	72				
144	72				
148	72				
156	72				
24	84	30	7	69.1	69.1
36	84	28	8	43.2	43.2
48	84				
60	84				
72	84				
84	84				
96	84				
108	84				
120	84				
132	84				
144	84				
148	84				
156	84				
19.125	26	11	8	100.0	100.0
26.5	26	15	7	100.0	100.0
37	26	18	7	84.3	84.3
53.125	26	22	7	72.4	72.4
19.125	38.375	16	7	99.0	99.0
26.5	38.375	18	7	82.0	82.0
37	38.375	23	6	74.2	74.2
53.125	38.375	25	7	58.0	58.0
19.125	50.625	19	7	91.7	91.7
26.5	50.625	21	7	72.7	72.7
37	50.625	24	7	60.6	60.6
53.125	50.625	31	6	53.7	53.7
19.125	58	21	7	89.0	89.0
26.5	58	23	7	69.5	69.5
37	58	26	7	56.4	56.4
53.125	58	33	6	49.4	49.4
19.125	63	23	7	87.7	87.7
26.5	63	24	7	68.0	68.0
37	63	27	7	54.4	54.4
53.125	63	33	7	46.3	46.3
19.125	74.25	26	7	85.3	85.3
26.5	74.25	28	7	65.3	65.3
37	74.25	28	7	48.0	48.0
53.125	74.25				

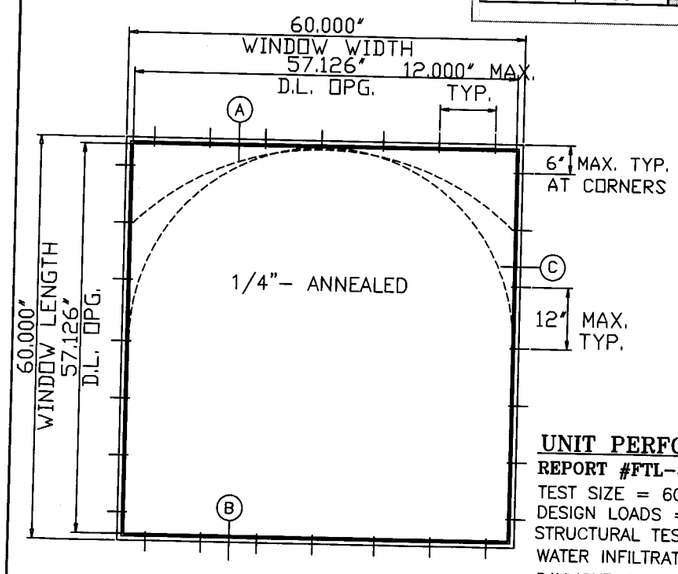

TYPICAL ELEVATION
TESTED UNIT

WINDOW FRAME SIZE NOTE:

1. THE WINDOW SIZE SHOWN ON CHARTS ARE FOR THE FLANGE WINDOW EXTERIOR OVERALL DIMENSION.
2. ADD 1 1/8" TO THE FLANGE WINDOW SIZE TO DETERMINE THE FIN WINDOW EXTERIOR OVERALL DIMENSION.

FLANGE FRAME ANCHORS ARE TO BE SPACED NOT GREATER THAN 6" FROM EACH CORNER, AND NOT GREATER THAN 12" CENTER TO CENTER. FIN FRAME ANCHORS SPACED AS TABULATED ABOVE.

PRODUCT REVISED
as complying with the Florida Building Code
Acceptance No 05-1019.03
Expiration Date MAY 8, 2008
By Manuel Perez
Miami Dade Product Control Division

UNIT PERFORMANCE DATA

REPORT #FTL-3620

TEST SIZE = 60" wide X 60" hi (O)
DESIGN LOADS = +47.40, -47.40 PSF (PA-202)
STRUCTURAL TEST LOAD = +71.10, -71.10 PSF
WATER INFILTRATION TEST = 18.0 PSF @ #FTL-3619
DAYLIGHT OPENING = 57 1/8" wide X 57 1/8" hi
TESTED GLASS = 1/4" ANNEALED GLASS

THOMAS J. SOTOS
PROFESSIONAL ENGINEER
FL LIC. # 55225

DATE MAY 18 2008

Revision Notes:
AS PER 2004 FBC REQUIREMENTS

Revised By:	Nelson Erazo	Date Revised:	10/05/2005
Drawn By:	Larry Magee	Date Drawn:	12/20/2002
		Scale:	AS NOTED

LAWSON INDUSTRIES, INC.
8501 NW 90th St.
MEDLEY, FLORIDA 33166
(305) 696-8660

MANUFACTURER OF QUALITY ALUMINUM WINDOWS AND GLASS DOORS

Draw Class:	Part Class:	Prod Category:	Series/Model:	Item:	Sheet:
LAYOUT					5 of 11

SERIES: 4000/6000 ALUMINUM FIXED WINDOWS
FIN/FLANGE FRAME WINDOW COMPARATIVE ANALYSIS & NOTES
1/4" ANNEALED GLASS

Part Number:
Drawing Number: L-4000/6000.01
Revision Level: B

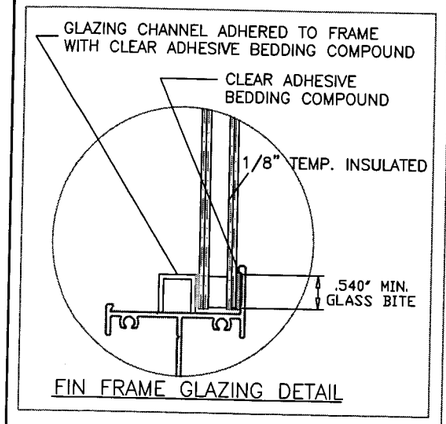

FIN FRAME GLAZING DETAIL

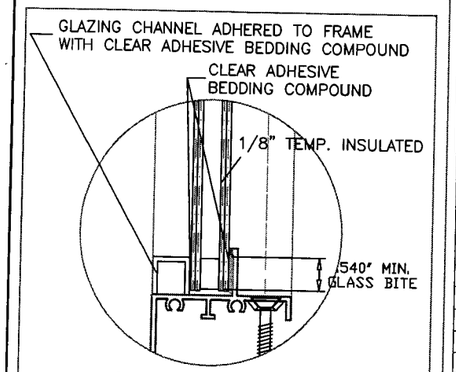

GLAZING DETAIL

WINDOW COMPARATIVE ANALYSIS CHART FOR 1/8" TEMP. INSULATED

Window Size		FIN FRAME		DESIGN LOAD CAPACITY - (PFS)	
HEIGHT INCHES	WIDTH INCHES	QTY OF ANCHORS	AVG. ANCHOR SPACING (IN)	POSITIVE	NEGATIVE
24	18	10	8	100.0	100.0
36	18	14	7	100.0	100.0
48	18	19	6	100.0	100.0
60	18	23	6	100.0	100.0
72	18	28	6	100.0	100.0
84	18	32	6	100.0	100.0
96	18	37	6	100.0	100.0
108	18	41	6	100.0	100.0
120	18	46	6	100.0	100.0
132	18				
144	18				
148	18				
156	18				
24	24	13	7	100.0	100.0
36	24	19	6	100.0	100.0
48	24	25	5	100.0	100.0
60	24	31	5	100.0	100.0
72	24	37	5	100.0	100.0
84	24	43	5	100.0	100.0
96	24	49	4	100.0	100.0
108	24	55	4	100.0	100.0
120	24	61	4	100.0	100.0
132	24				
144	24				
148	24				
156	24				
24	30	16	6	100.0	100.0
36	30	23	5	100.0	100.0
48	30	31	5	100.0	100.0
60	30	38	4	100.0	100.0
72	30	46	4	100.0	100.0
84	30	54	4	100.0	100.0
96	30	61	4	100.0	100.0
108	30	69	4	100.0	100.0
120	30	76	3	100.0	100.0
132	30				
144	30				
148	30				
156	30				

WINDOW COMPARATIVE ANALYSIS CHART FOR 1/8" TEMP. INSULATED

Window Size		FIN FRAME		DESIGN LOAD CAPACITY - (PFS)	
HEIGHT INCHES	WIDTH INCHES	QTY OF ANCHORS	AVG. ANCHOR SPACING (IN)	POSITIVE	NEGATIVE
24	36	19	6	100.0	100.0
36	36	28	5	100.0	100.0
48	36	37	4	100.0	100.0
60	36	46	4	100.0	100.0
72	36	55	3	100.0	100.0
84	36	64	3	100.0	100.0
96	36	73	3	100.0	100.0
108	36				
120	36				
132	36				
144	36				
148	36				
156	36				
24	48	25	5	100.0	100.0
36	48	37	4	100.0	100.0
48	48	49	3	100.0	100.0
60	48	61	3	100.0	100.0
72	48	73	3	100.0	100.0
84	48				
96	48				
108	48				
120	48				
132	48				
144	48				
148	48				
156	48				
24	60	31	5	100.0	100.0
36	60	46	4	100.0	100.0
48	60	61	3	100.0	100.0
60	60	76	3	100.0	100.0
72	60				
84	60				
96	60				
108	60				
120	60				
132	60				
144	60				
148	60				
156	60				

WINDOW COMPARATIVE ANALYSIS CHART FOR 1/8" TEMP. INSULATED

Window Size		FIN FRAME		DESIGN LOAD CAPACITY - (PFS)	
HEIGHT INCHES	WIDTH INCHES	QTY OF ANCHORS	AVG. ANCHOR SPACING (IN)	POSITIVE	NEGATIVE
24	72	37	5	100.0	100.0
36	72	55	3	100.0	100.0
48	72	73	3	100.0	100.0
60	72				
72	72				
84	72				
96	72				
108	72				
120	72				
132	72				
144	72				
148	72				
156	72				
24	84	43	5	100.0	100.0
36	84	64	3	100.0	100.0
48	84				
60	84				
72	84				
84	84				
96	84				
108	84				
120	84				
132	84				
144	84				
148	84				
156	84				
19.125	26	11	8	100.0	100.0
26.5	26	15	7	100.0	100.0
37	26	21	6	100.0	100.0
53.125	26	30	5	100.0	100.0
19.125	38.375	16	7	100.0	100.0
26.5	38.375	22	5	100.0	100.0
37	38.375	30	5	100.0	100.0
53.125	38.375	43	4	100.0	100.0
19.125	50.625	21	6	100.0	100.0
26.5	50.625	29	5	100.0	100.0
37	50.625	40	4	100.0	100.0
53.125	50.625	57	3	100.0	100.0
19.125	58	24	6	100.0	100.0
26.5	58	33	5	100.0	100.0
37	58	46	4	100.0	100.0
53.125	58	65	3	100.0	100.0
19.125	63	26	6	100.0	100.0
26.5	63	36	4	100.0	100.0
37	63	50	4	100.0	100.0
53.125	63	71	3	100.0	100.0
19.125	74.25	30	6	100.0	100.0
26.5	74.25	42	4	100.0	100.0
37	74.25	58	3	100.0	100.0
53.125	74.25				

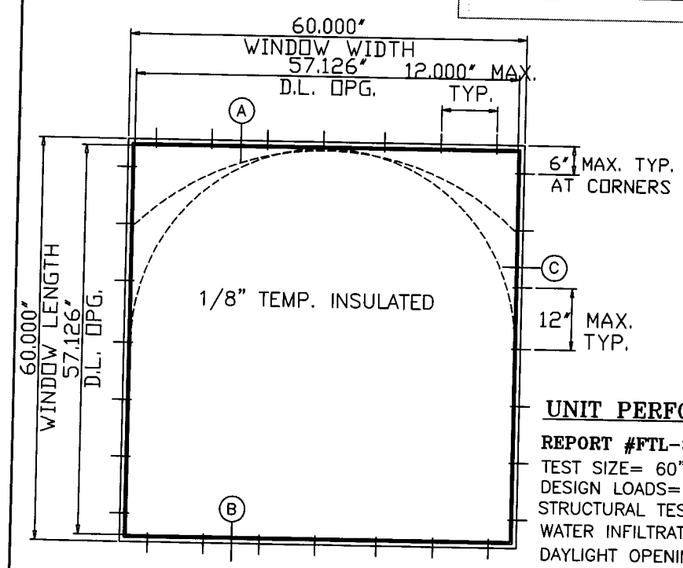

TYPICAL ELEVATION
TESTED UNIT

WINDOW FRAME SIZE NOTE:

1. THE WINDOW SIZE SHOWN ON CHARTS ARE FOR THE FLANGE WINDOW EXTERIOR OVERALL DIMENSION.
2. ADD 1 1/8" TO THE FLANGE WINDOW SIZE TO DETERMINE THE FIN WINDOW EXTERIOR OVERALL DIMENSION.

FLANGE FRAME ANCHORS ARE TO BE SPACED NOT GREATER THAN 6" FROM EACH CORNER, AND NOT GREATER THAN 12" CENTER TO CENTER. FIN FRAME ANCHORS SPACED AS TABULATED ABOVE.

PRODUCT REVISED
in complying with the Florida Building Code
Acceptance No. 05-1019.03
Expiration Date MAY 8, 2008
By Manuel Sera
Miami-Dade Product Control Division

UNIT PERFORMANCE DATA

REPORT #FTL-3621

TEST SIZE= 60" wide X 60" hi (O)
DESIGN LOADS= +144.00, -144.00 PSF (PA-202)
STRUCTURAL TEST LOAD= +216.00, -216.00 PSF
WATER INFILTRATION TEST= 18.0 PSF @ #FTL-3619
DAYLIGHT OPENING= 57 1/8" wide X 57 1/8" hi
TESTED GLASS= 1/8" TEMPERED GLASS
DOUBLE GLAZED INSULATED

THOMAS J. SOTOS
PROFESSIONAL ENGINEER
FL LIC. # 55225

DATE

Revision Notes:
AS PER 2004 FBC REQUIREMENTS

Revised By:	Nelson Erazo	Date Revised:	10/05/2005
Drawn By:	Larry Magee	Date Drawn:	12/20/2002
		Scale:	AS NOTED

LAWSON INDUSTRIES, INC.
8501 NW 90th St.
MEDLEY, FLORIDA 33166
(305) 696-8660

MANUFACTURER OF QUALITY ALUMINUM WINDOWS AND GLASS DOORS

Draw Class:	Part Class:	Prod Category:	Series/Model:	Item:	Sheet:
LAYOUT					6 of 11

SERIES: 4000/6000 ALUMINUM FIXED WINDOWS
FIN/FLANGE FRAME WINDOW COMPARATIVE ANALYSIS & NOTES
1/8" TEMPERED INSULATED GLASS

Part Number:	Drawing Number:	Revision Level:
	L-4000/6000.01	B

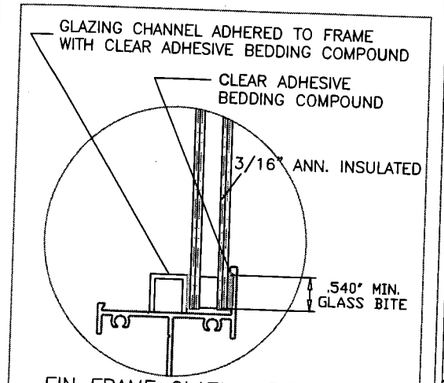

FIN FRAME GLAZING DETAIL

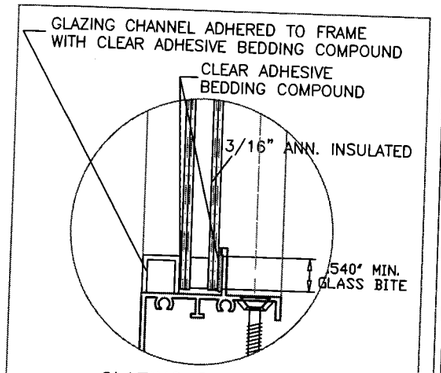

GLAZING DETAIL

WINDOW COMPARATIVE ANALYSIS CHART FOR 3/16" ANN. INSULATED

Window Size		FIN FRAME		DESIGN LOAD CAPACITY - (PFS)	
HEIGHT INCHES	WIDTH INCHES	QTY OF ANCHORS	AVG. ANCHOR SPACING (IN)	POSITIVE	NEGATIVE
24	18	10	8	100.0	100.0
36	18	14	7	100.0	100.0
48	18	19	6	100.0	100.0
60	18	23	6	100.0	100.0
72	18	28	6	100.0	100.0
84	18	32	6	100.0	100.0
96	18	37	6	100.0	100.0
108	18	41	6	100.0	100.0
120	18	46	6	100.0	100.0
132	18	50	6	100.0	100.0
144	18	55	5	100.0	100.0
148	18	57	5	100.0	100.0
156	18	60	5	100.0	100.0
24	24	13	7	100.0	100.0
36	24	19	6	100.0	100.0
48	24	25	5	100.0	100.0
60	24	31	5	100.0	100.0
72	24	37	5	100.0	100.0
84	24	43	5	99.0	99.0
96	24	48	5	97.0	97.0
108	24	53	4	95.5	95.5
120	24	58	4	94.3	94.3
132	24	63	4	93.4	93.4
144	24	68	4	92.6	92.6
148	24	70	4	92.4	92.4
156	24				
24	30	16	6	100.0	100.0
36	30	23	5	100.0	100.0
48	30	30	5	98.8	98.8
60	30	35	5	90.5	90.5
72	30	37	5	80.9	80.9
84	30	39	5	72.8	72.8
96	30	42	6	68.7	68.7
108	30	45	6	65.2	65.2
120	30	48	6	63.1	63.1
132	30				
144	30				
148	30				
156	30				

WINDOW COMPARATIVE ANALYSIS CHART FOR 3/16" ANN. INSULATED

Window Size		FIN FRAME		DESIGN LOAD CAPACITY - (PFS)	
HEIGHT INCHES	WIDTH INCHES	QTY OF ANCHORS	AVG. ANCHOR SPACING (IN)	POSITIVE	NEGATIVE
24	36	19	6	100.0	100.0
36	36	28	5	100.0	100.0
48	36	33	5	90.5	90.5
60	36	37	5	80.8	80.8
72	36	39	5	70.8	70.8
84	36	37	6	58.0	58.0
96	36	38	6	50.9	50.9
108	36				
120	36				
132	36				
144	36				
148	36				
156	36				
24	48	25	5	100.0	100.0
36	48	33	5	90.5	90.5
48	48	42	4	84.9	84.9
60	48	43	5	70.7	70.7
72	48	47	5	63.7	63.7
84	48				
96	48				
108	48				
120	48				
132	48				
144	48				
148	48				
156	48				
24	60	31	5	100.0	100.0
36	60	37	5	80.8	80.8
48	60	43	5	70.7	70.7
60	60	52	4	67.9	67.9
72	60				
84	60				
96	60				
108	60				
120	60				
132	60				
144	60				
148	60				
156	60				

WINDOW COMPARATIVE ANALYSIS CHART FOR 3/16" ANN. INSULATED

Window Size		FIN FRAME		DESIGN LOAD CAPACITY - (PFS)	
HEIGHT INCHES	WIDTH INCHES	QTY OF ANCHORS	AVG. ANCHOR SPACING (IN)	POSITIVE	NEGATIVE
24	72	37	5	100.0	100.0
36	72	39	5	70.8	70.8
48	72	47	5	63.7	63.7
60	72				
72	72				
84	72				
96	72				
108	72				
120	72				
132	72				
144	72				
148	72				
156	72				
24	84	43	5	99.0	99.0
36	84	37	6	58.0	58.0
48	84				
60	84				
72	84				
84	84				
96	84				
108	84				
120	84				
132	84				
144	84				
148	84				
156	84				
19.125	26	11	8	100.0	100.0
26.5	26	15	7	100.0	100.0
37	26	21	6	100.0	100.0
53.125	26	30	5	100.0	100.0
19.125	38.375	16	7	100.0	100.0
26.5	38.375	22	5	100.0	100.0
37	38.375	30	5	100.0	100.0
53.125	38.375	36	5	83.1	83.1
19.125	50.625	21	6	100.0	100.0
26.5	50.625	29	5	100.0	100.0
37	50.625	35	5	86.8	86.8
53.125	50.625	44	4	76.9	76.9
19.125	58	24	6	100.0	100.0
26.5	58	33	5	99.6	99.6
37	58	37	5	80.8	80.8
53.125	58	46	4	70.7	70.7
19.125	63	26	6	100.0	100.0
26.5	63	35	5	97.3	97.3
37	63	39	5	77.9	77.9
53.125	63	47	4	66.3	66.3
19.125	74.25	30	6	100.0	100.0
26.5	74.25	39	5	93.6	93.6
37	74.25	40	5	68.3	68.3
53.125	74.25				

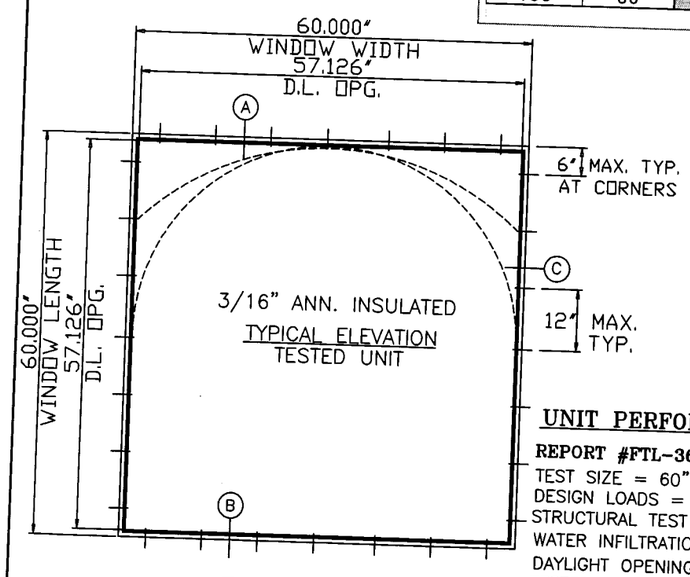

TYPICAL ELEVATION
TESTED UNIT

WINDOW FRAME SIZE NOTE:

1. THE WINDOW SIZE SHOWN ON CHARTS ARE FOR THE FLANGE WINDOW EXTERIOR OVERALL DIMENSION.
2. ADD 1 1/8" TO THE FLANGE WINDOW SIZE TO DETERMINE THE FIN WINDOW EXTERIOR OVERALL DIMENSION.

FLANGE FRAME ANCHORS ARE TO BE SPACED NOT GREATER THAN 6" FROM EACH CORNER, AND NOT GREATER THAN 12" CENTER TO CENTER. FIN FRAME ANCHORS SPACED AS TABULATED ABOVE.

PRODUCT REVISED
as complying with the Florida Building Code
Acceptance No. 05-1019.03
Expiration Date MAY 8, 2008
By Manuel Perez
Miami-Dade Product Control Division

UNIT PERFORMANCE DATA

REPORT #FTL-3622

TEST SIZE = 60" wide X 60" hi (O)
DESIGN LOADS = +67.90, −67.90 PSF (PA−202)
STRUCTURAL TEST LOAD = +101.9, −101.9 PSF
WATER INFILTRATION TEST = 18.0 PSF @ #FTL−3619
DAYLIGHT OPENING = 57 1/8" wide X 57 1/8" hi
TESTED GLASS = 3/16" ANNEALED GLASS
DOUBLE GLAZED INSULATED

THOMAS J. SOTOS
PROFESSIONAL ENGINEER
FL LIC. # 55225

DATE_____

Revision Notes:
AS PER 2004 FBC REQUIREMENTS

Revised By:	Nelson Erazo	Date Revised:	10/05/2005
Drawn By:	Larry Magee	Date Drawn:	12/20/2002
Scale:			AS NOTED

LAWSON INDUSTRIES, INC.
8501 NW 90th St.
MEDLEY, FLORIDA 33166
(305) 696-8660
MANUFACTURER OF QUALITY ALUMINUM WINDOWS AND GLASS DOORS

Draw Class:	Part Class:	Prod Category:	Series/Model:	Item:	Sheet:
LAYOUT					7 of 11

SERIES: 4000/6000 ALUMINUM FIXED WINDOWS
FIN/FLANGE FRAME WINDOW COMPARATIVE ANALYSIS & NOTES
3/16" ANNEALED INSULATED GLASS

Part Number:
Drawing Number: L−4000/6000.01
Revision Level: B

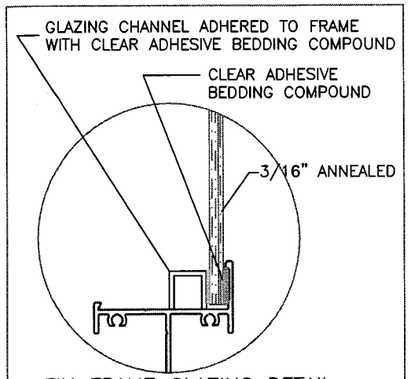

FIN FRAME GLAZING DETAIL

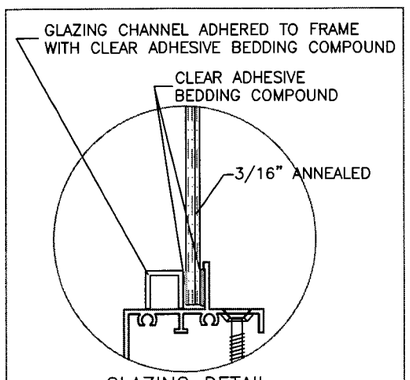

GLAZING DETAIL

WINDOW COMPARATIVE ANALYSIS CHART FOR 3/16" ANNEALED

Window Size		FIN FRAME		DESIGN LOAD CAPACITY - (PFS)	
HEIGHT INCHES	WIDTH INCHES	QTY OF ANCHORS	AVG. ANCHOR SPACING (IN)	POSITIVE	NEGATIVE
24	18	10	8	100.0	100.0
36	18	13	8	95.1	95.1
48	18	16	8	87.8	87.8
60	18	20	7	83.9	83.9
72	18	23	7	81.5	81.5
84	18	26	7	79.9	79.9
96	18	29	7	78.7	78.7
108	18	32	7	77.8	77.8
120	18	36	7	77.1	77.1
132	18				
144	18				
148	18				
156	18				
24	24	13	7	100.0	100.0
36	24	15	8	80.3	80.3
48	24	18	8	71.3	71.3
60	24	21	8	66.9	66.9
72	24	24	8	64.2	64.2
84	24	27	8	62.4	62.4
96	24	30	8	61.0	61.0
108	24				
120	24				
132	24				
144	24				
148	24				
156	24				
24	30	14	7	89.2	89.2
36	30	17	7	73.4	73.4
48	30	19	8	62.3	62.3
60	30	21	8	54.1	54.1
72	30	21	9	45.0	45.0
84	30				
96	30				
108	30				
120	30				
132	30				
144	30				
148	30				
156	30				

WINDOW COMPARATIVE ANALYSIS CHART FOR 3/16" ANNEALED

Window Size		FIN FRAME		DESIGN LOAD CAPACITY - (PFS)	
HEIGHT INCHES	WIDTH INCHES	QTY OF ANCHORS	AVG. ANCHOR SPACING (IN)	POSITIVE	NEGATIVE
24	36	15	8	80.3	80.3
36	36	20	7	71.3	71.3
48	36	21	8	57.1	57.1
60	36	23	8	50.0	50.0
72	36				
84	36				
96	36				
108	36				
120	36				
132	36				
144	36				
148	36				
156	36				
24	48	18	8	71.3	71.3
36	48	21	8	57.1	57.1
48	48	26	7	53.5	53.5
60	48				
72	48				
84	48				
96	48				
108	48				
120	48				
132	48				
144	48				
148	48				
156	48				
24	60	21	8	66.9	66.9
36	60	23	8	50.0	50.0
48	60				
60	60				
72	60				
84	60				
96	60				
108	60				
120	60				
132	60				
144	60				
148	60				
156	60				

WINDOW COMPARATIVE ANALYSIS CHART FOR 3/16" ANNEALED

Window Size		FIN FRAME		DESIGN LOAD CAPACITY - (PFS)	
HEIGHT INCHES	WIDTH INCHES	QTY OF ANCHORS	AVG. ANCHOR SPACING (IN)	POSITIVE	NEGATIVE
24	72	24	8	64.2	64.2
36	72				
48	72				
60	72				
72	72				
84	72				
96	72				
108	72				
120	72				
132	72				
144	72				
148	72				
156	72				
24	84	27	8	62.4	62.4
36	84				
48	84				
60	84				
72	84				
84	84				
96	84				
108	84				
120	84				
132	84				
144	84				
148	84				
156	84				
19.125	26	11	8	100.0	100.0
26.5	26	15	7	96.9	96.9
37	26	16	7	76.1	76.1
53.125	26	20	7	65.4	65.4
19.125	38.375	14	8	89.4	89.4
26.5	38.375	16	8	74.0	74.0
37	38.375	21	7	67.0	67.0
53.125	38.375	23	7	52.4	52.4
19.125	50.625	17	8	82.8	82.8
26.5	50.625	19	8	65.6	65.6
37	50.625	22	7	54.7	54.7
53.125	50.625				
19.125	58	19	8	80.4	80.4
26.5	58	21	8	62.8	62.8
37	58	24	7	51.0	51.0
53.125	58				
19.125	63	21	7	79.2	79.2
26.5	63	22	8	59.9	59.9
37	63				
53.125	63				
19.125	74.25	24	7	77.1	77.1
26.5	74.25	23	8	54.5	54.5
37	74.25				
53.125	74.25				

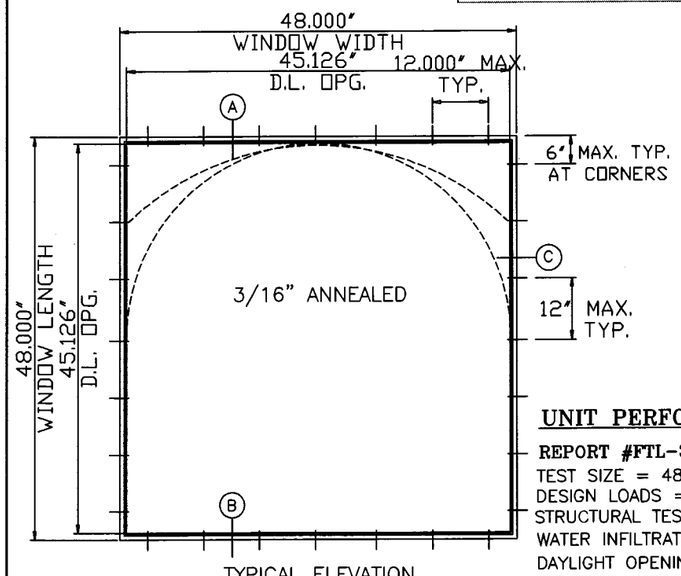

TYPICAL ELEVATION
TESTED UNIT

WINDOW FRAME SIZE NOTE:

1. THE WINDOW SIZE SHOWN ON CHARTS ARE FOR THE FLANGE WINDOW EXTERIOR OVERALL DIMENSION.
2. ADD 1 1/8" TO THE FLANGE WINDOW SIZE TO DETERMINE THE FIN WINDOW EXTERIOR OVERALL DIMENSION.

FLANGE FRAME ANCHORS ARE TO BE SPACED NOT GREATER THAN 6" FROM EACH CORNER, AND NOT GREATER THAN 12" CENTER TO CENTER. FIN FRAME ANCHORS SPACED AS TABULATED ABOVE.

PRODUCT REVISED
as complying with the Florida
Building Code
Acceptance No 05-1019.03
Expiration Date MAY 8, 2008
By Manuel Perez
Miami Dade Product Control
Division

UNIT PERFORMANCE DATA

REPORT #FTL-3623
TEST SIZE = 48" wide X 48" hi (O)
DESIGN LOADS = +53.50, −53.50 PSF (PA−202)
STRUCTURAL TEST LOAD = +80.3, −80.3 PSF
WATER INFILTRATION TEST = 18.0 PSF @ #FTL−3619
DAYLIGHT OPENING = 45 1/8" wide X 45 1/8" hi
TESTED GLASS = 3/16" ANNEALED GLASS

THOMAS J. SOTOS
PROFESSIONAL ENGINEER
FL LIC. # 55225

DATE_____

Revision Notes:
AS PER 2004 FBC REQUIREMENTS

Revised By:	Nelson Erazo	Date Revised:	10/05/2005
Drawn By:	Larry Magee	Date Drawn:	12/20/2002
		Scale:	AS NOTED

LAWSON INDUSTRIES, INC.
8501 NW 90th St.
MEDLEY, FLORIDA 33166
(305) 696−8660

MANUFACTURER OF QUALITY ALUMINUM WINDOWS AND GLASS DOORS

Draw Class:	Part Class:	Prod Category:	Series/Model:	Item:	Sheet:
LAYOUT					8 of 11

SERIES: 4000/6000 ALUMINUM FIXED WINDOWS
FIN/FLANGE FRAME WINDOW COMPARATIVE ANALYSIS & NOTES
3/16" ANNEALED GLASS

Part Number:	Drawing Number:	Revision Level:
	L−4000/6000.01	B

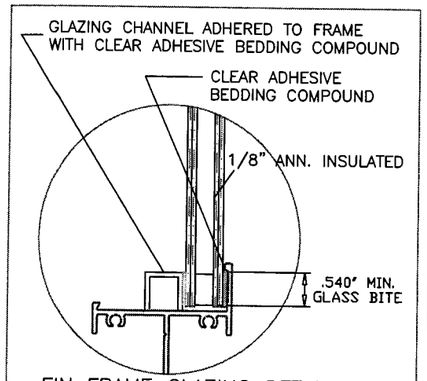

FIN FRAME GLAZING DETAIL

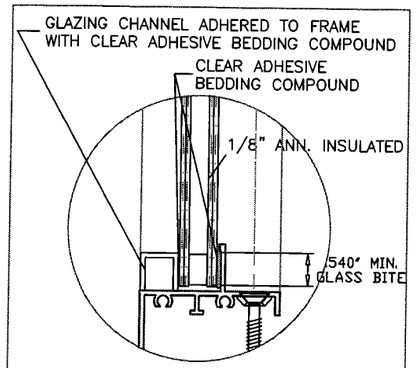

GLAZING DETAIL

WINDOW COMPARATIVE ANALYSIS CHART FOR 1/8" ANN. INSULATED

Window Size		FIN FRAME		DESIGN LOAD CAPACITY - (PFS)	
HEIGHT INCHES	WIDTH INCHES	QTY OF ANCHORS	AVG. ANCHOR SPACING (IN)	POSITIVE	NEGATIVE
24	18	10	8	100.0	100.0
36	18	14	7	96.0	96.0
48	18	17	7	88.6	88.6
60	18	20	7	84.7	84.7
72	18	23	7	82.3	82.3
84	18	26	7	80.6	80.6
96	18	29	7	79.4	79.4
108	18	33	7	78.5	78.5
120	18	36	7	77.8	77.8
132	18				
144	18				
148	18				
156	18				
24	24	13	7	100.0	100.0
36	24	15	8	81.0	81.0
48	24	18	8	72.0	72.0
60	24	19	8	62.7	62.7
72	24	20	9	52.4	52.4
84	24	21	10	47.8	47.8
96	24	23	10	45.5	45.5
108	24				
120	24				
132	24				
144	24				
148	24				
156	24				
24	30	14	7	90.0	90.0
36	30	17	7	74.1	74.1
48	30	20	7	62.8	62.8
60	30	22	8	57.6	57.6
72	30	21	9	45.2	45.2
84	30				
96	30				
108	30				
120	30				
132	30				
144	30				
148	30				
156	30				

WINDOW COMPARATIVE ANALYSIS CHART FOR 1/8" ANN. INSULATED

Window Size		FIN FRAME		DESIGN LOAD CAPACITY - (PFS)	
HEIGHT INCHES	WIDTH INCHES	QTY OF ANCHORS	AVG. ANCHOR SPACING (IN)	POSITIVE	NEGATIVE
24	36	15	8	81.0	81.0
36	36	20	7	72.0	72.0
48	36	21	8	57.6	57.6
60	36	24	8	51.4	51.4
72	36				
84	36				
96	36				
108	36				
120	36				
132	36				
144	36				
148	36				
156	36				
24	48	18	8	72.0	72.0
36	48	21	8	57.6	57.6
48	48	27	7	54.0	54.0
60	48				
72	48				
84	48				
96	48				
108	48				
120	48				
132	48				
144	48				
148	48				
156	48				
24	60	19	8	62.7	62.7
36	60	24	8	51.4	51.4
48	60				
60	60				
72	60				
84	60				
96	60				
108	60				
120	60				
132	60				
144	60				
148	60				
156	60				

WINDOW COMPARATIVE ANALYSIS CHART FOR 1/8" ANN. INSULATED

Window Size		FIN FRAME		DESIGN LOAD CAPACITY - (PFS)	
HEIGHT INCHES	WIDTH INCHES	QTY OF ANCHORS	AVG. ANCHOR SPACING (IN)	POSITIVE	NEGATIVE
24	72	20	9	52.4	52.4
36	72				
48	72				
60	72				
72	72				
84	72				
96	72				
108	72				
120	72				
132	72				
144	72				
148	72				
156	72				
24	84	21	10	47.8	47.8
36	84				
48	84				
60	84				
72	84				
84	84				
96	84				
108	84				
120	84				
132	84				
144	84				
148	84				
156	84				
19.125	26	11	8	100.0	100.0
26.5	26	15	7	97.8	97.8
37	26	16	7	76.8	76.8
53.125	26	20	7	66.0	66.0
19.125	38.375	14	8	90.3	90.3
26.5	38.375	16	8	74.7	74.7
37	38.375	21	7	67.6	67.6
53.125	38.375	23	7	52.9	52.9
19.125	50.625	18	7	83.5	83.5
26.5	50.625	19	8	66.2	66.2
37	50.625	22	7	55.2	55.2
53.125	50.625				
19.125	58	19	8	81.1	81.1
26.5	58	21	8	63.3	63.3
37	58	24	7	51.4	51.4
53.125	58				
19.125	63	21	7	79.9	79.9
26.5	63	20	8	55.0	55.0
37	63				
53.125	63				
19.125	74.25	24	7	77.8	77.8
26.5	74.25	19	10	45.5	45.5
37	74.25				
53.125	74.25				

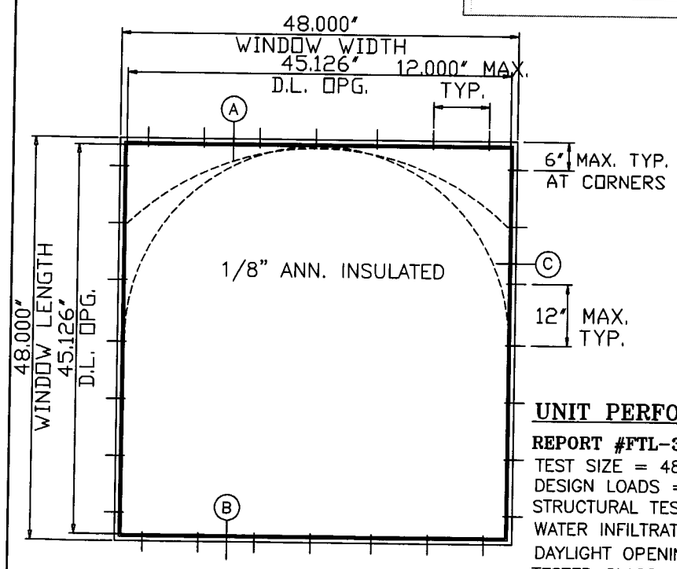

TYPICAL ELEVATION
TESTED UNIT

WINDOW FRAME SIZE NOTE:

1. THE WINDOW SIZE SHOWN ON CHARTS ARE FOR THE FLANGE WINDOW EXTERIOR OVERALL DIMENSION.
2. ADD 1 1/8" TO THE FLANGE WINDOW SIZE TO DETERMINE THE FIN WINDOW EXTERIOR OVERALL DIMENSION.

FLANGE FRAME ANCHORS ARE TO BE SPACED NOT GREATER THAN 6" FROM EACH CORNER, AND NOT GREATER THAN 12" CENTER TO CENTER. FIN FRAME ANCHORS SPACED AS TABULATED ABOVE.

PRODUCT REVISED
as complying with the Florida Building Code
Acceptance No. 05-1019.03
Expiration Date MAY 8, 2008
By Manuel Seara
Miami-Dade Product Control Division

UNIT PERFORMANCE DATA

REPORT #FTL-3625

TEST SIZE = 48" wide X 48" hi (O)
DESIGN LOADS = +54.00, -54.00 PSF (PA-202)
STRUCTURAL TEST LOAD = +81.00, -81.00 PSF
WATER INFILTRATION TEST = 18.0 PSF @ #FTL-3619
DAYLIGHT OPENING = 45 1/8" wide X 45 1/8" hi
TESTED GLASS = 1/8" ANNEALED GLASS
DOUBLE GLAZED INSULATED

THOMAS J. SOTOS
PROFESSIONAL ENGINEER
FL LIC. # 55225

DATE_____

Revision Notes:
AS PER 2004 FBC REQUIREMENTS

Revised By:	Nelson Erazo	Date Revised:	10/05/2005
Drawn By:	Larry Magee	Date Drawn:	12/20/2002
		Scale:	AS NOTED

LAWSON INDUSTRIES, INC.
8501 NW 90th St.
MEDLEY, FLORIDA 33166
(305) 696-8660
MANUFACTURER OF QUALITY ALUMINUM WINDOWS AND GLASS DOORS

Draw Class:	Part Class:	Prod Category:	Series/Model:	Item:	Sheet:
LAYOUT					9 of 11

SERIES: 4000/6000 ALUMINUM FIXED WINDOWS
FIN/FLANGE FRAME WINDOW COMPARATIVE ANALYSIS & NOTES
1/8" ANNEALED INSULATED GLASS

Part Number:	Drawing Number:	Revision Level:
	L-4000/6000.01	B

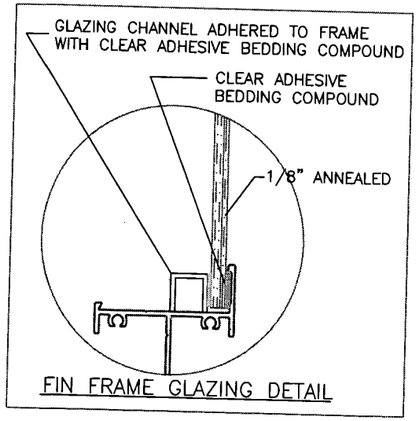

FIN FRAME GLAZING DETAIL

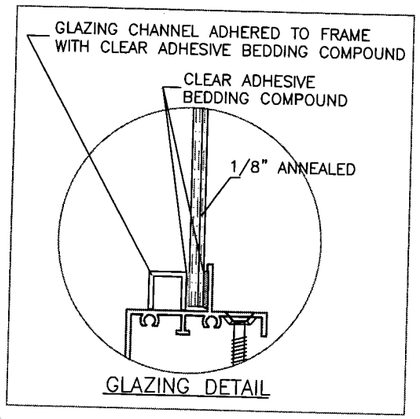

GLAZING DETAIL

WINDOW COMPARATIVE ANALYSIS CHART FOR 1/8" ANNEALED MONO

Window Size		FIN FRAME		DESIGN LOAD CAPACITY - (PFS)	
HEIGHT INCHES	WIDTH INCHES	QTY OF ANCHORS	AVG. ANCHOR SPACING (IN)	POSITIVE	NEGATIVE
24	18	10	8	64.0	64.0
36	18	13	8	53.3	53.3
48	18	16	8	49.2	49.2
60	18	20	7	47.1	47.1
72	18	23	7	45.7	45.7
84	18	26	7	44.8	44.8
96	18	29	7	44.1	44.1
108	18	32	7	43.6	43.6
120	18	36	7	43.2	43.2
132	18				
144	18				
148	18				
156	18				
24	24	13	7	60.0	60.0
36	24	15	8	45.0	45.0
48	24	18	8	40.0	40.0
60	24	21	8	34.8	34.8
72	24	24	8	29.1	29.1
84	24	27	8	26.6	26.6
96	24	30	8	25.3	25.3
108	24				
120	24				
132	24				
144	24				
148	24				
156	24				
24	30	14	7	50.0	50.0
36	30	17	7	41.1	41.1
48	30	19	8	34.9	34.9
60	30	21	8	32.0	32.0
72	30	21	9	25.1	25.1
84	30				
96	30				
108	30				
120	30				
132	30				
144	30				
148	30				
156	30				

WINDOW COMPARATIVE ANALYSIS CHART FOR 1/8" ANNEALED MONO

Window Size		FIN FRAME		DESIGN LOAD CAPACITY - (PFS)	
HEIGHT INCHES	WIDTH INCHES	QTY OF ANCHORS	AVG. ANCHOR SPACING (IN)	POSITIVE	NEGATIVE
24	36	15	8	45.0	45.0
36	36	20	7	40.0	40.0
48	36	21	8	32.0	32.0
60	36	23	8	28.6	28.6
72	36				
84	36				
96	36				
108	36				
120	36				
132	36				
144	36				
148	36				
156	36				
24	48	18	8	40.0	40.0
36	48	21	8	32.0	32.0
48	48	26	7	30.0	30.0
60	48				
72	48				
84	48				
96	48				
108	48				
120	48				
132	48				
144	48				
148	48				
156	48				
24	60	21	8	34.8	34.8
36	60	23	8	28.6	28.6
48	60				
60	60				
72	60				
84	60				
96	60				
108	60				
120	60				
132	60				
144	60				
148	60				
156	60				

WINDOW COMPARATIVE ANALYSIS CHART FOR 1/8" ANNEALED MONO

Window Size		FIN FRAME		DESIGN LOAD CAPACITY - (PFS)	
HEIGHT INCHES	WIDTH INCHES	QTY OF ANCHORS	AVG. ANCHOR SPACING (IN)	POSITIVE	NEGATIVE
24	72	24	8	29.1	29.1
36	72				
48	72				
60	72				
72	72				
84	72				
96	72				
108	72				
120	72				
132	72				
144	72				
148	72				
156	72				
24	84	27	8	26.6	26.6
36	84				
48	84				
60	84				
72	84				
84	84				
96	84				
108	84				
120	84				
132	84				
144	84				
148	84				
156	84				
19.125	26	11	8	59.5	59.5
26.5	26	15	7	54.4	54.4
37	26	16	7	42.7	42.7
53.125	26	20	7	36.7	36.7
19.125	38.375	14	8	50.1	50.1
26.5	38.375	16	8	41.5	41.5
37	38.375	21	7	37.6	37.6
53.125	38.375	23	7	29.4	29.4
19.125	50.625	17	8	46.4	46.4
26.5	50.625	19	8	36.8	36.8
37	50.625	22	7	30.7	30.7
53.125	50.625				
19.125	58	19	8	45.1	45.1
26.5	58	21	8	35.1	35.1
37	58	24	7	28.6	28.6
53.125	58				
19.125	63	21	7	44.4	44.4
26.5	63	22	8	30.5	30.5
37	63				
53.125	63				
19.125	74.25	24	7	43.2	43.2
26.5	74.25	23	8	25.3	25.3
37	74.25				
53.125	74.25				

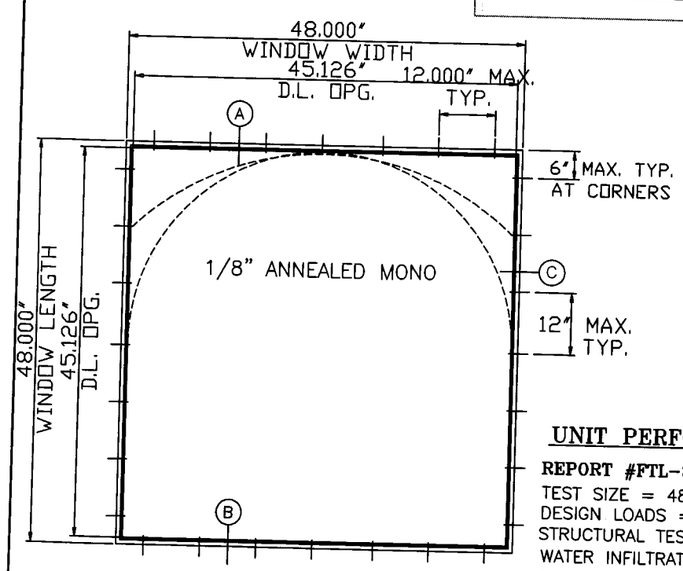

TYPICAL ELEVATION
TESTED UNIT

WINDOW FRAME SIZE NOTE:

1. THE WINDOW SIZE SHOWN ON CHARTS ARE FOR THE FLANGE WINDOW EXTERIOR OVERALL DIMENSION.
2. ADD 1 1/8" TO THE FLANGE WINDOW SIZE TO DETERMINE THE FIN WINDOW EXTERIOR OVERALL DIMENSION.

FLANGE FRAME ANCHORS ARE TO BE SPACED NOT GREATER THAN 6" FROM EACH CORNER, AND NOT GREATER THAN 12" CENTER TO CENTER. FIN FRAME ANCHORS SPACED AS TABULATED ABOVE.

PRODUCT REVISED
as complying with the Florida Building Code
Acceptance No. 05-1019.03
Expiration Date MAY 8, 2008
By Manuel Perez
Miami-Dade Product Control Division

UNIT PERFORMANCE DATA

REPORT #FTL-3624

TEST SIZE = 48" wide X 48" hi (O)
DESIGN LOADS = +30.00, -30.00 PSF (PA-202)
STRUCTURAL TEST LOAD = +45.00, -45.00 PSF
WATER INFILTRATION TEST = 18.0 PSF @ #FTL-3619
DAYLIGHT OPENING = 45 1/8" wide X 45 1/8" hi
TESTED GLASS = 1/8" ANNEALED GLASS

THOMAS J. SOTOS
PROFESSIONAL ENGINEER
FL LIC.# 55225

DATE_____

Revision Notes:
AS PER 2004 FBC REQUIREMENTS

Revised By:	Nelson Erazo	Date Revised:	10/05/2005
Drawn By:	Larry Magee	Date Drawn:	12/20/2002
		Scale:	AS NOTED

LAWSON INDUSTRIES, INC.
8501 NW 90th St.
MEDLEY, FLORIDA 33166
(305) 696-8660

MANUFACTURER OF QUALITY ALUMINUM WINDOWS AND GLASS DOORS

Draw Class:	Part Class:	Prod Category:	Series/Model:	Item:	Sheet:
LAYOUT					10 of 11

SERIES: 4000/6000 ALUMINUM FIXED WINDOWS
FIN/FLANGE FRAME WINDOW COMPARATIVE ANALYSIS & NOTES
1/8" ANNEALED GLASS

Part Number:	Drawing Number:	Revision Level:
	L-4000/6000.01	B

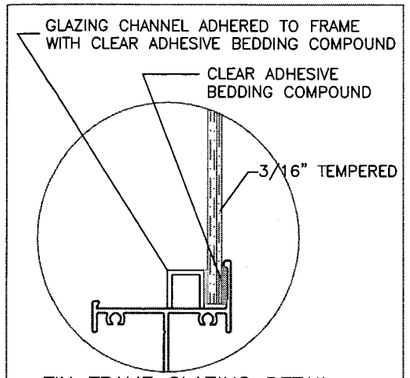

FIN FRAME GLAZING DETAIL

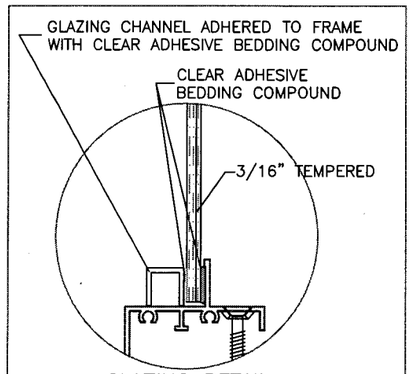

GLAZING DETAIL

WINDOW COMPARATIVE ANALYSIS CHART FOR 3/16" TEMPERED

Window Size		FIN FRAME		DESIGN LOAD CAPACITY - (PFS)	
HEIGHT INCHES	WIDTH INCHES	QTY OF ANCHORS	AVG. ANCHOR SPACING (IN)	POSITIVE	NEGATIVE
24	18	10	8	100.0	100.0
36	18	14	7	100.0	100.0
48	18	19	6	100.0	100.0
60	18	23	6	100.0	100.0
72	18	28	6	100.0	100.0
84	18	32	6	100.0	100.0
96	18	37	6	100.0	100.0
108	18	41	6	100.0	100.0
120	18	46	6	100.0	100.0
132	18	50	6	100.0	100.0
144	18	55	5	100.0	100.0
148	18	57	5	100.0	100.0
156	18	60	5	100.0	100.0
24	24	13	7	100.0	100.0
36	24	19	6	100.0	100.0
48	24	25	5	100.0	100.0
60	24	31	5	100.0	100.0
72	24	37	5	100.0	100.0
84	24	43	5	100.0	100.0
96	24	49	4	100.0	100.0
108	24	55	4	100.0	100.0
120	24	61	4	100.0	100.0
132	24	67	4	100.0	100.0
144	24	73	4	100.0	100.0
148	24	75	4	100.0	100.0
156	24				
24	30	16	6	100.0	100.0
36	30	23	5	100.0	100.0
48	30	31	5	100.0	100.0
60	30	38	4	100.0	100.0
72	30	46	4	100.0	100.0
84	30	54	4	100.0	100.0
96	30	61	4	100.0	100.0
108	30	69	4	100.0	100.0
120	30	76	3	100.0	100.0
132	30				
144	30				
148	30				
156	30				

WINDOW COMPARATIVE ANALYSIS CHART FOR 3/16" TEMPERED

Window Size		FIN FRAME		DESIGN LOAD CAPACITY - (PFS)	
HEIGHT INCHES	WIDTH INCHES	QTY OF ANCHORS	AVG. ANCHOR SPACING (IN)	POSITIVE	NEGATIVE
24	36	19	6	100.0	100.0
36	36	28	5	100.0	100.0
48	36	37	4	100.0	100.0
60	36	46	4	100.0	100.0
72	36	55	3	100.0	100.0
84	36	64	3	100.0	100.0
96	36	73	3	100.0	100.0
108	36				
120	36				
132	36				
144	36				
148	36				
156	36				
24	48	25	5	100.0	100.0
36	48	37	4	100.0	100.0
48	48	49	3	100.0	100.0
60	48	61	3	100.0	100.0
72	48	73	3	100.0	100.0
84	48				
96	48				
108	48				
120	48				
132	48				
144	48				
148	48				
156	48				
24	60	31	5	100.0	100.0
36	60	46	4	100.0	100.0
48	60	61	3	100.0	100.0
60	60	76	3	100.0	100.0
72	60				
84	60				
96	60				
108	60				
120	60				
132	60				
144	60				
148	60				
156	60				

WINDOW COMPARATIVE ANALYSIS CHART FOR 3/16" TEMPERED

Window Size		FIN FRAME		DESIGN LOAD CAPACITY - (PFS)	
HEIGHT INCHES	WIDTH INCHES	QTY OF ANCHORS	AVG. ANCHOR SPACING (IN)	POSITIVE	NEGATIVE
24	72	37	5	100.0	100.0
36	72	55	3	100.0	100.0
48	72	73	3	100.0	100.0
60	72				
72	72				
84	72				
96	72				
108	72				
120	72				
132	72				
144	72				
148	72				
156	72				
24	84	43	5	100.0	100.0
36	84	64	3	100.0	100.0
48	84				
60	84				
72	84				
84	84				
96	84				
108	84				
120	84				
132	84				
144	84				
148	84				
156	84				
19.125	26	11	8	100.0	100.0
26.5	26	15	7	100.0	100.0
37	26	21	6	100.0	100.0
53.125	26	30	5	100.0	100.0
19.125	38.375	16	7	100.0	100.0
26.5	38.375	22	5	100.0	100.0
37	38.375	30	5	100.0	100.0
53.125	38.375	43	4	100.0	100.0
19.125	50.625	21	6	100.0	100.0
26.5	50.625	29	5	100.0	100.0
37	50.625	40	4	100.0	100.0
53.125	50.625	57	3	100.0	100.0
19.125	58	24	6	100.0	100.0
26.5	58	33	5	100.0	100.0
37	58	46	4	100.0	100.0
53.125	58	65	3	100.0	100.0
19.125	63	26	6	100.0	100.0
26.5	63	36	4	100.0	100.0
37	63	50	4	100.0	100.0
53.125	63	71	3	100.0	100.0
19.125	74.25	30	6	100.0	100.0
26.5	74.25	42	4	100.0	100.0
37	74.25	58	3	100.0	100.0
53.125	74.25				

WINDOW FRAME SIZE NOTE:

1. THE WINDOW SIZE SHOWN ON CHARTS ARE FOR THE FLANGE WINDOW EXTERIOR OVERALL DIMENSION.
2. ADD 1 1/8" TO THE FLANGE WINDOW SIZE TO DETERMINE THE FIN WINDOW EXTERIOR OVERALL DIMENSION.

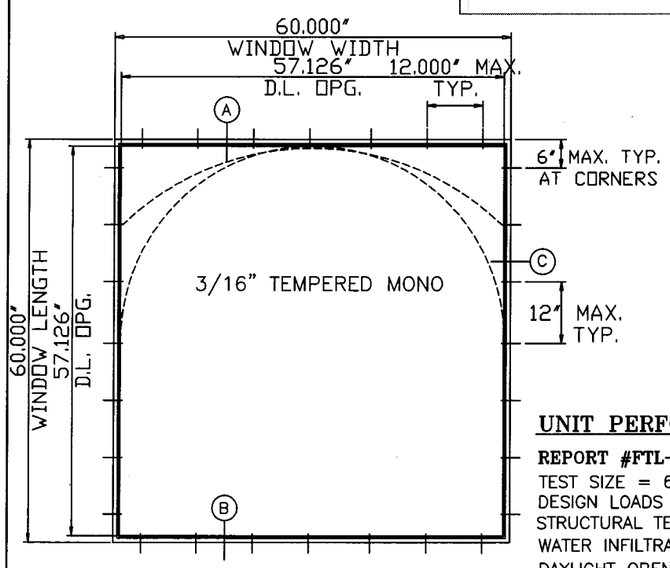

TYPICAL ELEVATION
TESTED UNIT

FLANGE FRAME ANCHORS ARE TO BE SPACED NOT GREATER THAN 6" FROM EACH CORNER, AND NOT GREATER THAN 12" CENTER TO CENTER. FIN FRAME ANCHORS SPACED AS TABULATED ABOVE.

UNIT PERFORMANCE DATA

REPORT #FTL-3626

TEST SIZE = 60" wide X 60" hi (O)
DESIGN LOADS = +151.00, -151.00 PSF (PA-202)
STRUCTURAL TEST LOAD = +226.50, -226.50 PSF
WATER INFILTRATION TEST = 18.0 PSF @ #FTL-3619
DAYLIGHT OPENING = 57 1/8" wide X 57 1/8" hi
TESTED GLASS = 3/16" TEMPERED GLASS

PRODUCT REVISED
as complying with the Florida Building Code
Acceptance No. 05-1019.03
Expiration Date MAY 8, 2008
By Manuel Perez
Miami-Dade Product Control Division

THOMAS J. SOTOS
PROFESSIONAL ENGINEER
FL LIC. # 55225

DATE_____

Revision Notes:
AS PER 2004 FBC REQUIREMENTS

Revised By: Nelson Erazo	Date Revised: 10/05/2005		
Drawn By: Larry Magee	Date Drawn: 12/20/2002		
	Scale: AS NOTED		

LAWSON INDUSTRIES, INC.
8501 NW 90th St.
MEDLEY, FLORIDA 33166
(305) 696-8660
MANUFACTURER OF QUALITY ALUMINUM WINDOWS AND GLASS DOORS

Draw Class:	Part Class:	Prod Category:	Series/Model:	Item:	Sheet:
LAYOUT					11 of 11

SERIES: 4000/6000 ALUMINUM FIXED WINDOWS
FIN/FLANGE FRAME WINDOW COMPARATIVE ANALYSIS & NOTES
3/16" TEMPERED GLASS

Part Number:	Drawing Number:	Revision Level:
	L-4000/6000.01	B