MIAMI-DADE COUNTY
BUILDING CODE COMPLIANCE OFFICE (BCCO)
PRODUCT CONTROL DIVISION

MIAMI-DADE COUNTY, FLORIDA
METRO-DADE FLAGLER BUILDING

140 WEST FLAGLER STREET, SUITE 1603
MIAMI, FLORIDA 33130-1563
(305) 375-2901 FAX (305) 375-2908
www.miamidade.gov

NOTICE OF ACCEPTANCE (NOA)

Guardian Building Products
5120 West Clifton Street
Tampa, Florida 33634

SCOPE:
This NOA is being issued under the applicable rules and regulations governing the use of construction materials. The documentation submitted has been reviewed by Miami-Dade County Product Control Division and accepted by the Board of Rules and Appeals (BORA) to be used in Miami Dade County and other areas where allowed by the Authority Having Jurisdiction (AHJ).

This NOA shall not be valid after the expiration date stated below. The Miami-Dade County Product Control Division (In Miami Dade County) and/or the AHJ (in areas other than Miami Dade County) reserve the right to have this product or material tested for quality assurance purposes. If this product or material fails to perform in the accepted manner, the manufacturer will incur the expense of such testing and the AHJ may immediately revoke, modify, or suspend the use of such product or material within their jurisdiction. BORA reserves the right to revoke this acceptance, if it is determined by Miami-Dade County Product Control Division that this product or material fails to meet the requirements of the applicable building code.

This product is approved as described herein, and has been designed to comply with the High Velocity Hurricane Zone of the Florida Building Code.

DESCRIPTION: 0.050" (min.) Aluminum Storm Panels Shutter

APPROVAL DOCUMENT: Drawing No. 06-362, titled 0.050" Aluminum Storm Panel, sheets 1 through 7 of 7, prepared by EngCo, Inc., dated December 09, 2006, signed and sealed by Pedro De Figueiredo, P.E., bearing Miami-Dade County Product Control Approval stamp with the Notice of Acceptance number and approval date by the Miami-Dade County Product Control Division.

MISSILE IMPACT RATING: Large and Small Missile Impact

LABELING: Each panel shall bear a permanent label with the manufacturer's name or logo, city, state and the following statement: "Miami-Dade County Product Control Approved", unless otherwise noted herein.

RENEWAL of this NOA shall be considered after a renewal application has been filed and there has been no change in the applicable building code negatively affecting the performance of this product.

TERMINATION of this NOA will occur after the expiration date or if there has been a revision or change in the materials, use, and/or manufacture of the product or process. Misuse of this NOA as an endorsement of any product, for sales, advertising or any other purposes shall automatically terminate this NOA. Failure to comply with any section of this NOA shall be cause for termination and removal of NOA.

ADVERTISEMENT: The NOA number preceded by the words Miami-Dade County, Florida, and followed by the expiration date may be displayed in advertising literature. If any portion of the NOA is displayed, then it shall be done in its entirety.

INSPECTION: A copy of this entire NOA shall be provided to the user by the manufacturer or its distributors and shall be available for inspection at the job site at the request of the Building Official.

This NOA consists of this page 1, evidence submitted page E-1 as well as approval document mentioned above. The submitted documentation was reviewed by **Helmy A. Makar, P.E., M.S.**

Helmy A. Makar
03/01/2007

NOA No 05-1102.03
Expiration Date: 03/01/2012
Approval Date: 03/01/2007

Guardian Building Products

NOTICE OF ACCEPTANCE: EVIDENCE SUBMITTED

A. DRAWINGS

1. *Drawing No. 06-362, titled 0.050" Aluminum Storm Panel, sheets 1 through 7 of 7, prepared by EngCo, Inc., dated December 09, 2006, signed and sealed by Pedro De Figueiredo, P.E.*

B. TESTS

1. *Test report on Large Missile Impact Test, Cyclic Wind Pressure Test, and Uniform Static Air Pressure Test of 0.050" aluminum storm panels, prepared by Architectural Testing, Report No. 59032.01-401-18, dated September 22, 2005, signed and sealed by Joseph A. Reed, P.E.*
2. *Test report on Large Missile Impact Test, Cyclic Wind Pressure Test, and Uniform Static Air Pressure Test of 0.050" aluminum storm panels, prepared by Architectural Testing, Report No. 59697.01-401-18, dated July 20, 2005, signed and sealed by Joseph A. Reed, P.E.*
3. *Test report on Large Missile Impact Test and Cyclic Wind Pressure Test of 0.050" aluminum storm panels, prepared by Architectural Testing, Report No. 59033.01-401-18, dated August 30, 2005, signed and sealed by Joseph A. Reed, P.E.*
4. *Test report on Large Missile Impact Test, Cyclic Wind Pressure Test, and Uniform Static Air Pressure Test of 0.050" aluminum storm panels, prepared by Architectural Testing, Report No. 57700.01-401-18, dated August 30, 2005, signed and sealed by Joseph A. Reed, P.E.*

C. CALCULATIONS

1. *Comparative Analysis, Anchor Calculations and details for 0.050" Aluminum Storm Panels, dated December 15, 2006, pages 1 through 26 of 26, prepared by EngCo, Inc., signed and sealed by Pedro De Figueiredo, P.E.*
2. *Comparative Analysis for 0.050" Aluminum Storm Panels, dated February 06, 2007, page 1 of 1, prepared by EngCo, Inc., signed and sealed by Pedro De Figueiredo, P.E.*

D. QUALITY ASSURANCE

1. *By Miami-Dade County Building Code Compliance Office.*

E. MATERIAL CERTIFICATIONS

1. *Extrusion Drawings by Alumax and Alcoa.*

Helmy A. Makar, P. E., M.S.
Product Control Examiner
NOA No 05-1102.03
Expiration Date: 03/01/2012
Approval Date: 03/01/2007

GENERAL NOTES:

1- THIS PRODUCT IS DESIGNED AND TESTED (TAS 201, 202, 203) IN ACCORDANCE WITH THE THE FLORIDA BUILDING CODE 2004 EDITION, 2006 SUPPLEMENT.
PRODUCT CAN BE USED WHERE CODE IS APPLICABLE INCLUDING THE HIGH VELOCITY HURRICANE ZONE (HVHZ).

2- LABEL INFORMATION SHALL CONTAIN:

0.050 ALUMINUM STORM PANELS
GUARDIAN BLDG. PRODUCTS
ASHLEY ALUMINUM LLC
TAMPA - FLORIDA
MIAMI-DADE COUNTY PRODUCT CONTROL APPROVED.

3- MATERIAL:
3.1 - STORM PANELS SHALL BE 0.05" ALUMINUM 5052-H32 OR 3004-H34 ALLOY.
3.2 - ALL ALUMINUM EXTRUSIONS SHALL BE 6063-T6 OR AS INDICATED IN THIS SET OF DRAWINGS.

4- ANCHORS SHALL BE AS SHOWN ON THIS APPROVAL. ANCHOR EMBEDMENT TO BASE MATERIAL SHALL BE BEYOND WALL DRESSING.

5- A LICENSED ENGINEER OR ARCHITECT SHALL PROVIDE A SITE SPECIFIC WIND LOAD FOR A PROJECT AS PER ASCE 7-02 OR LATEST. THE CONTRACTOR, ENGINEER OR ARCHITECT SHALL VERIFY THE ADEQUACY OF THIS PRODUCT WITH THE PROJECT WIND LOADS.

6- THE CONTRACTOR MUST VERIFY THE ADEQUACY OF THE EXISTING STRUCTURE IN SUSTAINING THE SHUTTER IMPOSED LOADS.

7- MATERIALS, INCLUDING BUT NOT LIMITED TO STEEL/ METAL SCREWS, THAT COME INTO CONTACT WITH OTHER DISSIMILAR MATERIALS SHALL MEET THE REQUIREMENTS OF 2004 FBC SECTION 2003.8.4.

8- NO 33 1/3% INCREASE IN ALLOWABLE STRESS HAS BEEN USED IN THE DESIGN OF THIS PRODUCT. ANCHORS INTO WOOD WERE DESIGNED WITH 1.6 LOAD DURATION.

INDEX:

SHEET 1 - GENERAL NOTES & TYPICAL ELEVATIONS, ALLOWABLE DESIGN PRESSURES TABLE.
SHEET 2 - COMPONENTS DETAILS
SHEET 3 - ANCHOR AND COMPONENT SCHEDULES AND ANCHOR SPACING TABLE.
SHEET 4 - MOUNT TYPES 1, 2, 3, & 4 DETAILS
SHEET 5 - MOUNT TYPES 5, 6, 7 & 8 DETAILS
SHEET 6 - MOUNT TYPES 9, 9A, 10 & 10A DETAILS
SHEET 7 - SIDE CLOSURE SECTION DETAILS A, B, C, D, E AND F

TYPICAL ELEVATION

PANELS CAN BE INSTALLED VERTICALLY OR HORIZONTALLY USING APPLICABLE ANCHORING DETAILS

1,2,3,4,5,6,7, 8,9,9A,10,10A

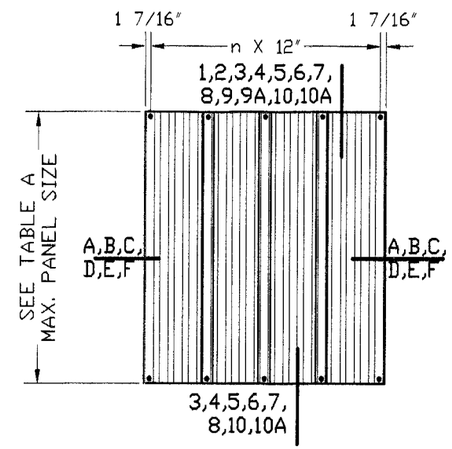

VERTICAL INSTALLATION

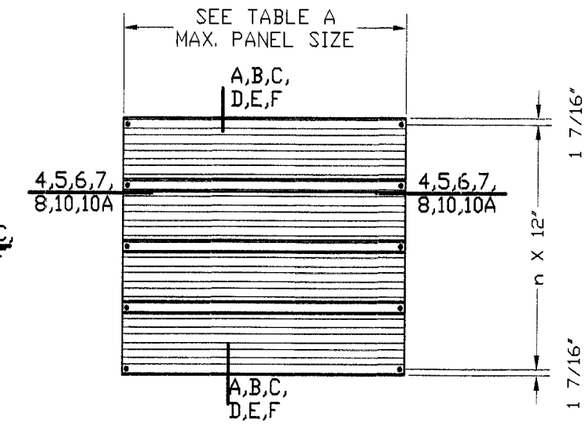

HORIZONTAL INSTALLATION

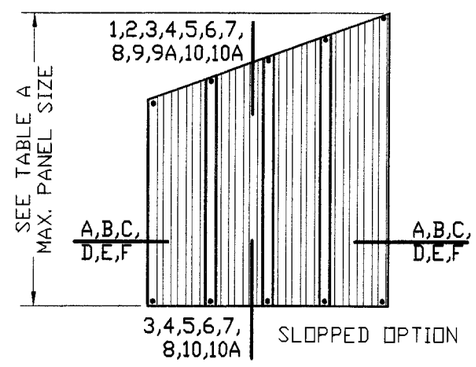

SLOPPED OPTION

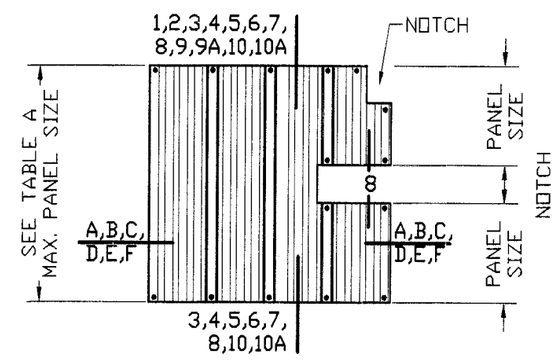

NOTCHED OPTION

TABLE A - PANEL MAXIMUM ALLOWABLE DESIGNED PRESSURES:

MAXIMUM PANEL SIZE (in)	Pd (+/-) psf Mount types 1	2	3, 4, 5, 6, 7, 8	9, 9A	10, 10A
115.5	59	-	68	31	68
105.0	61	59		35	
84.0	65	64		44	
72.0	68	68		50	
60.0	68	68		60	

NOTE: ON MOUNTS 1, 2, 4, 5, 6, 7, 8, 10 AND 10 ANCHOR SPACING MAY FURTHER LIMIT THE ABOVE ALLOWABLE DESIGN PRESSURE.

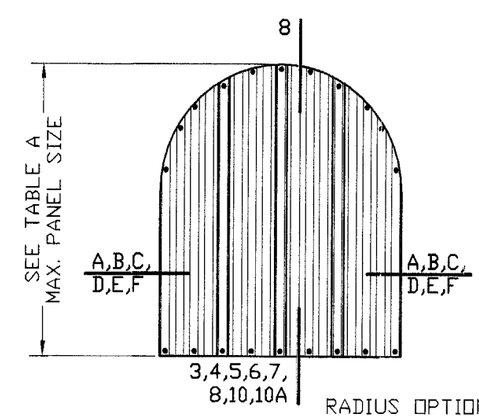

RADIUS OPTION

GUARDIAN
BUILDING PRODUCTS
ASHLEY ALUMINUM LLC.
5120 W. CLIFTON ST.
TAMPA, FL 33634
TEL: (813) 884-0444
TEL: (800) 749-4067
FAX: (813) 884-0255

PRODUCT:
0.050 ALUMINUM STORM PANEL

Engineering:
EngCo Inc.
CA 8116
6971 W. Sunrise Blvd. 104
Plantation, Fl. 33313
Tel.: (954) 585-0304
Fax: (954) 585-0305

FEB 0 6 2007
Pedro De Figueiredo, PE
PE 52609

DRAFTING:
PK DRAFTING & MORE

Date: 12/09/06
Scale: NA
Design by: PPMF

PRODUCT CONTROL DIVISION:
Approved as complying with the Florida Building Code
Date 03/01/2007
NOA# 05-1102.03
Miami Dade Product Control Division
By Helmy A. Medo

Drawing Number
06-362

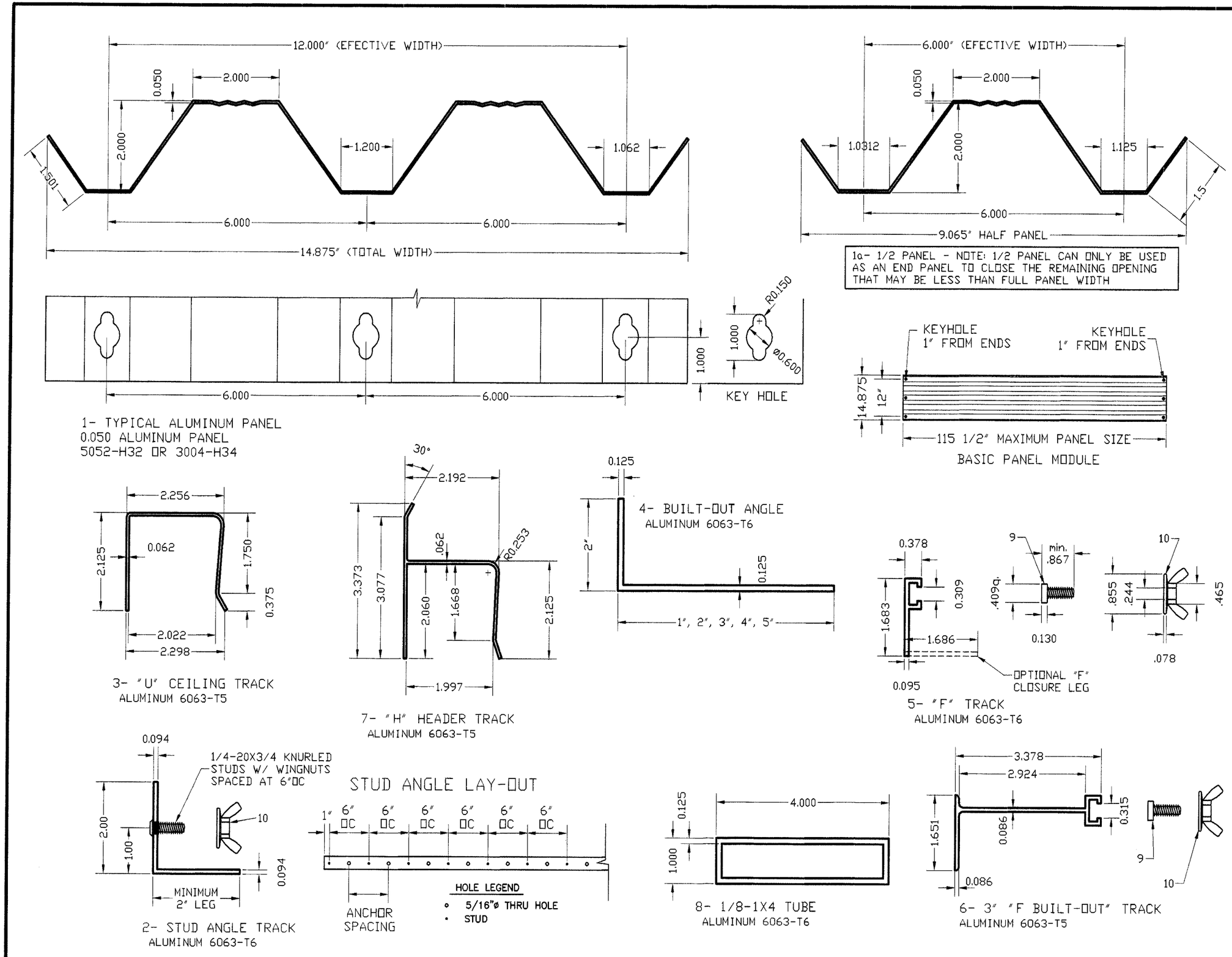

GUARDIAN
BUILDING PRODUCTS
ASHLEY ALUMINUM LLC.
5120 W. CLIFTON ST.
TAMPA, FL 33634
TEL: (813) 884-0444
TEL: (800) 749-4067
FAX: (813) 884-0255

PRODUCT:
0.050 ALUMINUM STORM PANEL

Engineering:
EngCo Inc.
CA 8116
6971 W. Sunrise Blvd. 104
Plantation, Fl. 33313
Tel.: (954) 585-0304
Fax: (954) 585-0305

FEB 0 6 2007

Pedro De Figueiredo, PE
PE 52609

DRAFTING:
PK DRAFTING & MORE

Date: 12/09/06
Scale: NA
Design by: PPMF

PRODUCT CONTROL DIVISION:

Approved as complying with the Florida Building Code
Date 03/01/2007
NOA# 05-1102.03
Miami Dade Product Control Division
By Helmy A. Mel

Drawing Number
06-362

ANCHOR TYPE
SEE ANCHOR SCHEDULE

TABLE B – MAXIMUM ANCHOR SPACING ON CENTER

MOUNT TYPES
SHEETS 4, 5 AND 6

PANEL HEIGHT		68 PSF									50 PSF									40 PSF								
		1	2	4	5	6	7	8	10	10A	1	2	4	5	6	7	8	10	10A	1	2	4	5	6	7	8	10	10A
112.5	A	4	7	8	12	9	8	6	5	12	6	10	11	12	12	11	6	7	12	7	12	12	12	12	12	6	9	12
	A1	na	na	4	6	na	na	6	na	5	na	4	5	8	4	4	6	na	7	na	6	7	10	5	5	6	na	8
	A2	4	na	4	12	9	8	6	6	12	6	4	6	12	12	11	6	8	12	8	5	8	12	12	12	6	10	12
	B	na	5	6	12	6	5	6	4	10	4	7	8	12	8	7	6	5	12	5	9	10	12	11	9	6	7	12
	B1	na	na	na	na	na	na	na	na	na	na	na	na	5	na	na	na	na	4	na	4	4	6	na	na	6	na	5
	C	na	na	4	9	5	4	6	na	7	na	na	6	12	6	6	6	4	10	na	na	7	12	8	7	6	5	12
	C1	na	na	8	12	11	10	6	7	12	na	na	11	12	12	12	6	10	12	na	na	12	12	12	12	6	12	12
	C2	na	na	5	12	6	5	6	4	9	na	na	7	12	8	7	6	5	12	na	na	9	12	10	9	6	6	12
	D	na	na	10	12	11	10	6	7	12	na	na	12	12	12	12	6	10	12	na	na	12	12	12	12	6	12	12
	D1	na	na	na	6	na	na	6	na	5	na	na	4	8	4	na	6	na	7	na	na	6	10	5	4	6	na	8
	D2	na	na	6	12	10	9	6	6	12	na	na	8	12	12	12	6	9	12	na	na	10	12	12	12	6	11	12
108	A	4	7	9	12	9	8	6	6	12	6	10	12	12	12	11	6	8	12	8	12	12	12	12	12	6	10	12
	A1	na	na	4	6	na	na	6	na	5	na	5	6	9	4	4	6	na	7	na	6	7	11	6	5	6	na	9
	A2	5	na	5	12	10	9	6	6	12	7	4	6	12	12	12	6	9	12	8	5	8	12	12	12	6	11	12
	B	na	5	6	12	6	6	6	4	10	4	7	8	12	9	8	6	6	12	5	9	11	12	11	10	6	7	12
	B1	na	na	na	4	na	na	na	na	na	na	na	4	5	na	na	na	na	4	na	4	5	7	na	na	6	na	5
	C	na	na	4	10	5	4	6	na	8	na	na	6	12	7	6	6	4	11	na	na	8	12	9	8	6	5	12
	C1	na	na	9	12	12	10	6	7	12	na	na	12	12	12	12	6	10	12	na	na	12	12	12	12	6	12	12
	C2	na	na	6	12	6	6	6	4	10	na	na	8	12	9	8	6	5	12	na	na	10	12	11	10	6	7	12
	D	na	na	11	12	12	11	6	8	12	na	na	12	12	12	12	6	10	12	na	na	12	12	12	12	6	12	12
	D1	na	na	na	6	na	na	6	na	5	na	na	5	9	4	4	6	na	7	na	na	6	11	5	5	6	na	9
	D2	na	na	6	12	11	10	6	7	12	na	na	8	12	12	12	6	9	12	na	na	10	12	12	12	6	12	12
96	A	5	8	10	12	10	9	6	6	12	7	12	12	12	12	12	6	9	12	9	12	12	12	12	12	6	11	12
	A1	na	4	5	7	4	na	6	na	6	na	5	7	10	5	4	6	na	8	na	7	8	12	6	6	6	4	10
	A2	5	na	5	12	11	10	6	7	12	8	5	7	12	12	12	6	10	12	10	6	9	12	12	12	6	12	12
	B	na	6	7	12	7	7	6	5	12	5	8	9	12	10	9	6	6	12	6	10	12	12	12	11	6	8	12
	B1	na	na	na	4	na	na	na	na	na	na	na	4	6	na	na	6	na	5	na	4	5	7	4	na	6	na	6
	C	na	na	5	11	6	5	6	na	9	na	na	7	12	8	7	6	5	12	na	na	9	12	10	9	6	6	12
	C1	na	na	10	12	12	12	6	8	12	na	na	12	12	12	12	6	12	12	na	na	12	12	12	12	6	12	12
	C2	na	na	6	12	7	6	6	4	11	na	na	9	12	10	9	6	6	12	na	na	11	12	12	11	6	8	12
	D	na	na	12	12	12	12	6	9	12	na	na	12	12	12	12	6	12	12	na	na	12	12	12	12	6	12	12
	D1	na	na	4	7	na	na	6	na	6	na	na	5	10	5	4	6	na	8	na	na	7	12	6	6	6	4	10
	D2	na	na	7	12	12	11	6	8	12	na	na	9	12	12	12	6	11	12	na	na	12	12	12	12	6	12	12
84	A	6	10	11	12	12	11	6	7	12	8	12	12	12	12	12	6	10	12	10	12	12	12	12	12	6	12	12
	A1	na	5	5	8	4	4	6	na	7	na	6	8	12	6	5	6	4	9	na	8	10	12	7	6	6	5	12
	A2	6	4	6	12	12	12	6	8	12	9	6	8	12	12	12	6	11	12	11	7	11	12	12	12	6	12	12
	B	4	7	8	12	8	8	6	5	12	6	10	11	12	12	10	6	7	12	7	12	12	12	12	12	6	9	12
	B1	na	na	na	5	na	na	na	na	4	na	4	5	7	na	na	6	na	5	na	5	6	9	4	4	6	na	7
	C	na	na	6	12	6	6	6	4	10	na	na	8	12	9	8	6	6	12	na	na	10	12	11	10	6	7	12
	C1	na	na	12	12	12	12	6	10	12	na	na	12	12	12	12	6	12	12	na	na	12	12	12	12	6	12	12
	C2	na	na	7	12	8	7	6	5	12	na	na	10	12	11	10	6	7	12	na	na	12	12	12	12	6	9	12
	D	na	na	12	12	12	12	6	10	12	na	na	12	12	12	12	6	12	12	na	na	12	12	12	12	6	12	12
	D1	na	na	4	8	4	4	6	na	7	na	na	6	11	6	5	6	na	9	na	na	8	12	7	6	6	4	12
	D2	na	na	8	12	12	12	6	9	12	na	na	11	12	12	12	6	12	12	na	na	12	12	12	12	6	12	12
60	A	8	12	12	12	12	12	6	11	12	11	12	12	12	12	12	6	12	12	12	12	12	12	12	12	6	12	12
	A1	na	7	8	12	6	5	6	4	10	4	9	11	12	8	7	6	5	12	5	11	12	12	10	9	6	7	12
	A2	9	6	9	12	12	12	6	12	12	12	8	12	12	12	12	6	12	12	12	10	12	12	12	12	6	12	12
	B	6	10	11	12	12	11	6	8	12	8	12	12	12	12	12	6	10	12	10	12	12	12	12	12	6	12	12
	B1	na	4	5	7	na	na	6	na	6	na	6	7	10	5	4	6	na	8	na	7	9	12	6	5	6	4	10
	C	na	na	8	12	9	8	6	6	12	na	na	12	12	12	11	6	8	12	na	na	12	12	12	12	6	10	12
	C1	na	na	12	12	12	12	6	12	12	na	na	12	12	12	12	6	12	12	na	na	12	12	12	12	6	12	12
	C2	na	na	10	12	12	10	6	7	12	na	na	12	12	12	12	6	10	12	na	na	12	12	12	12	6	12	12
	D	na	na	12	12	12	12	6	12	12	na	na	12	12	12	12	6	12	12	na	na	12	12	12	12	6	12	12
	D1	na	na	6	12	6	5	6	4	9	na	na	9	12	8	7	6	5	12	na	na	11	12	10	9	6	6	12
	D2	na	na	11	12	12	12	6	12	12	na	na	12	12	12	12	6	12	12	na	na	12	12	12	12	6	12	12

EXAMPLE:
PANEL HEIGHT: 60"
DESIGNED PRESSURE: Pd= 68 PSF
ANCHOR TYPE D2 - SEE ANCHOR SCHEDULE
MOUNT TYPE 5 - SEE SHEET 5 OF 7
MAXIMUM ANCHOR SPACING: 12" OC
EDGE DISTANCE - 3/4"
EMBEDMENT: 2 3/8"

ANCHOR SCHEDULE:

ANCHOR TYPE	DESCRIPTION	Embed.	Edge Dist
A	1/4" Tapcons by Elco into Concrete (fc' =2700psi)	1 3/4"	2 1/2"
A1	1/4" Tapcons by Elco into CMU	1 1/4"	2 1/2"
A2	1/4" Tapcons into Wood (SG)=.55)	1 1/2"	7/8"
B	1/4-20 Powers Calk-in into Concrete (fc' =3000psi)	7/8"	3"
B1	1/4-20 Powers Calk-in into CMU	7/8"	3 3/4"
C	1/4" Male/Fem. Panelmate into CMU	1 1/4"	2 1/2"
C1	1/4" Male/Fem. Panelmate into Concrete (fc' =3350psi)	1 3/4"	2 1/2"
C2	1/4" Male/Fem. Panelmate into Wood (SG)=.55)	1 7/8"	3/4"
D	1/4" Panelmate Plus into Concrete (fc' =3350psi)	2"	2 1/2"
D1	1/4" Panelmate Plus into CMU	1 1/4"	2 1/2"
D2	1/4" Panelmate Plus into Wood (SG)=.55)	2 3/8"	3/4"

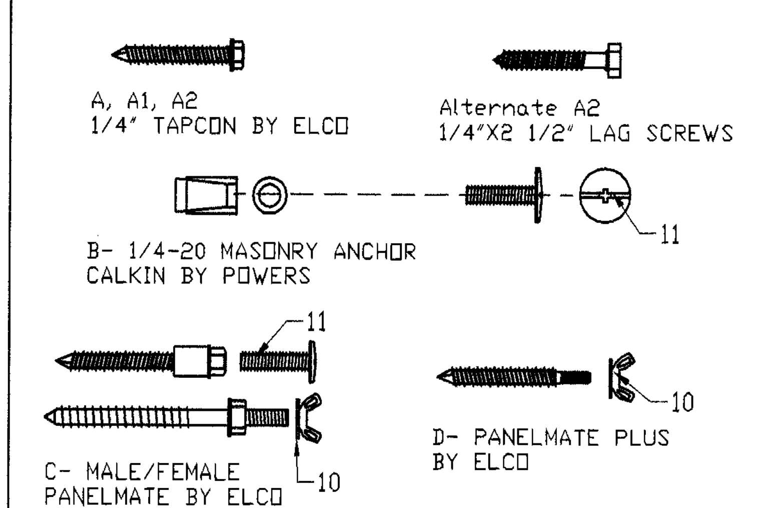

COMPONENTS SCHEDULE		
PART	DESCRIPTION	MATERIAL
1, 1a	0.05 ROLL FORMED PANEL	ALUMINUM
2	STUD ANGLE TRACK	6063-T6
3	"U" CEILING TRACK	6063-T5
4	1/8-2X BUILT-OUT ANGLE	6063-T6
5	"F" TRACK	6063-T6
6	"F BUILT-OUT" TRACK	6063-T5
7	"H" HEADER TRACK	6063-T5
8	1/8-1x4 TUBE	6063-T6
9	1/4-20 SQR HEAD MS	STAINLESS STEEL
10	1/4-20 WASHERED WINGNUT	ZINC ALLOY
11	1/4-20 SS SIDEWALK SCREWS	STAINLESS STEEL
12	1/4-20 SS HH MACHINE SCREWS	STAINLESS STEEL
13	1/4-20 SS HH NUT	STAINLESS STEEL

GUARDIAN
BUILDING PRODUCTS
ASHLEY ALUMINUM LLC.
5120 W. CLIFTON ST.
TAMPA, FL 33634
TEL: (813) 884-0444
TEL: (800) 749-4067
FAX: (813) 884-0255

PRODUCT:
0.050 ALUMINUM STORM PANEL

Engineering:
EngCo Inc.
CA 8116
6971 W. Sunrise Blvd. 104
Plantation, Fl. 33313
Tel.: (954) 585-0304
Fax: (954) 585-0305

FEB 06 2007
Pedro De Figueiredo, PE
PE 52609

DRAFTING:
PK DRAFTING & MORE

Date: 12/09/06
Scale: NA
Design by: PPMF

PRODUCT CONTROL DIVISION:
Approved as complying with the Florida Building Code
Date 03/01/2007
NOA# 05-1102.03
Miami Dade Product Control Division
By [signature]

Drawing Number
06-362

MOUNT TYPE 1

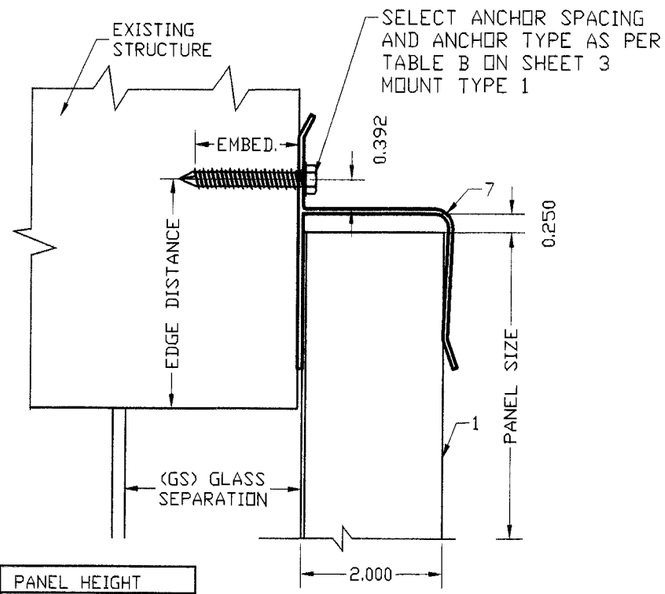

GS	PANEL HEIGHT
3.25"	GREATER THAN 72"
2.5"	LESS OR = 72"

MOUNT TYPE 2

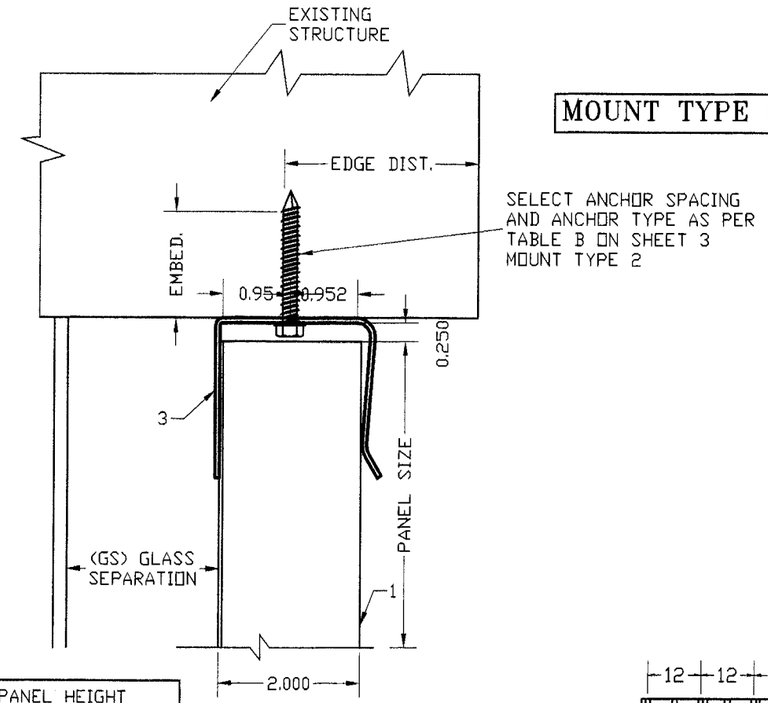

GS	PANEL HEIGHT
3.25"	GREATER THAN 72"
2.5"	LESS OR = 72"

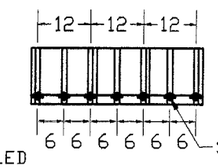

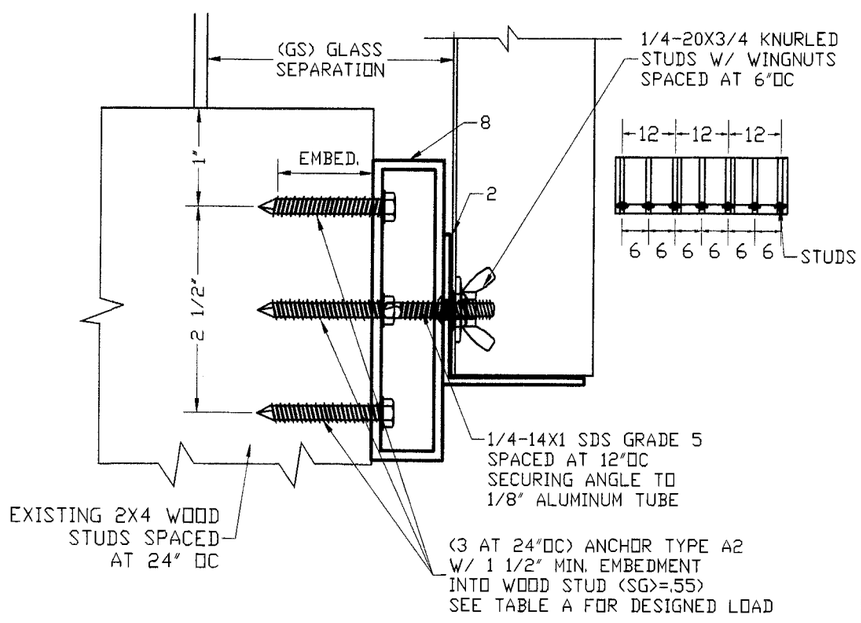

MOUNT TYPE 3

NOTE: CAN BE USED AT SILL & HEADER

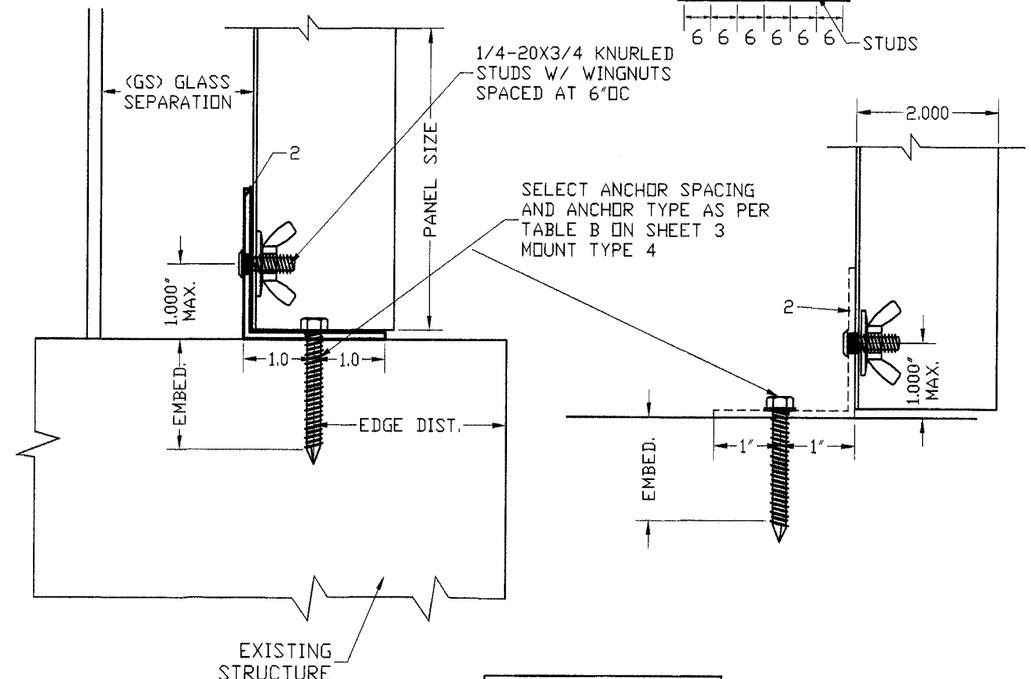

MOUNT TYPE 4

NOTE: CAN BE USED AT SILL, HEADER OR JAMBS.

GUARDIAN
BUILDING PRODUCTS
ASHLEY ALUMINUM LLC.
5120 W. CLIFTON ST.
TAMPA, FL 33634
TEL: (813) 884-0444
TEL: (800) 749-4067
FAX: (813) 884-0255

PRODUCT:
0.050 ALUMINUM STORM PANEL

Engineering:
EngCo Inc.
CA 8116
6971 W. Sunrise Blvd. 104
Plantation, Fl. 33313
Tel.: (954) 585-0304
Fax: (954) 585-0305

FEB 0 6 2007

Pedro De Figueiredo, PE
PE 52609

DRAFTING:
PK DRAFTING & MORE

Date: 12/09/06
Scale: NA
Design by: PPMF

PRODUCT CONTROL DIVISION:

Approved as complying with the Florida Building Code
Date 03/01/2007
NOA# 05-1102.03
Miami Dade Product Control Division
By

Drawing Number
06-362

MOUNT TYPE 8

NOTE: CAN BE USED AT SILL, HEADER OR JAMBS.

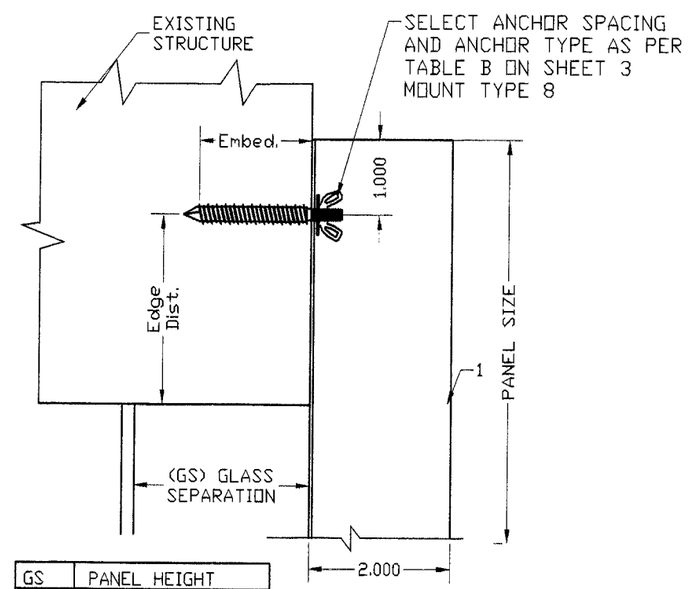

GS	PANEL HEIGHT
3.25"	GREATER THAN 72"
2.5"	LESS OR = 72"

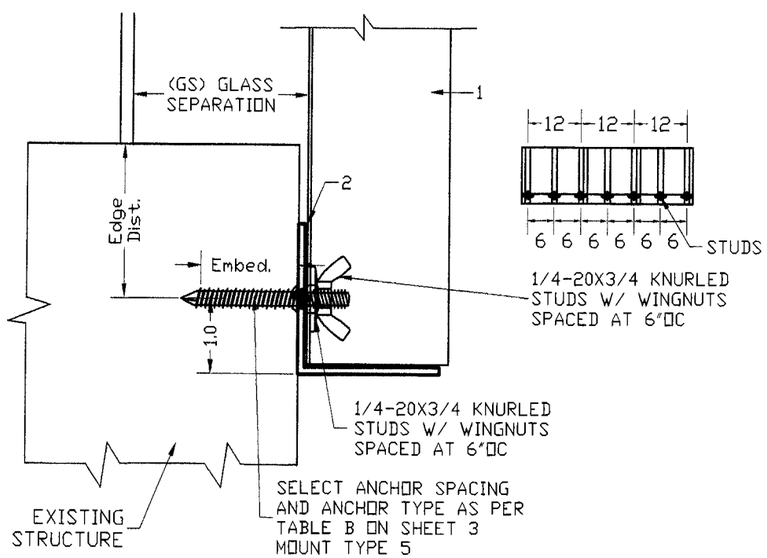

MOUNT TYPE 5

NOTE: CAN BE USED AT SILL, HEADER OR JAMBS.

MOUNT TYPE 7

NOTE: CAN BE USED AT SILL, HEADER OR JAMBS.

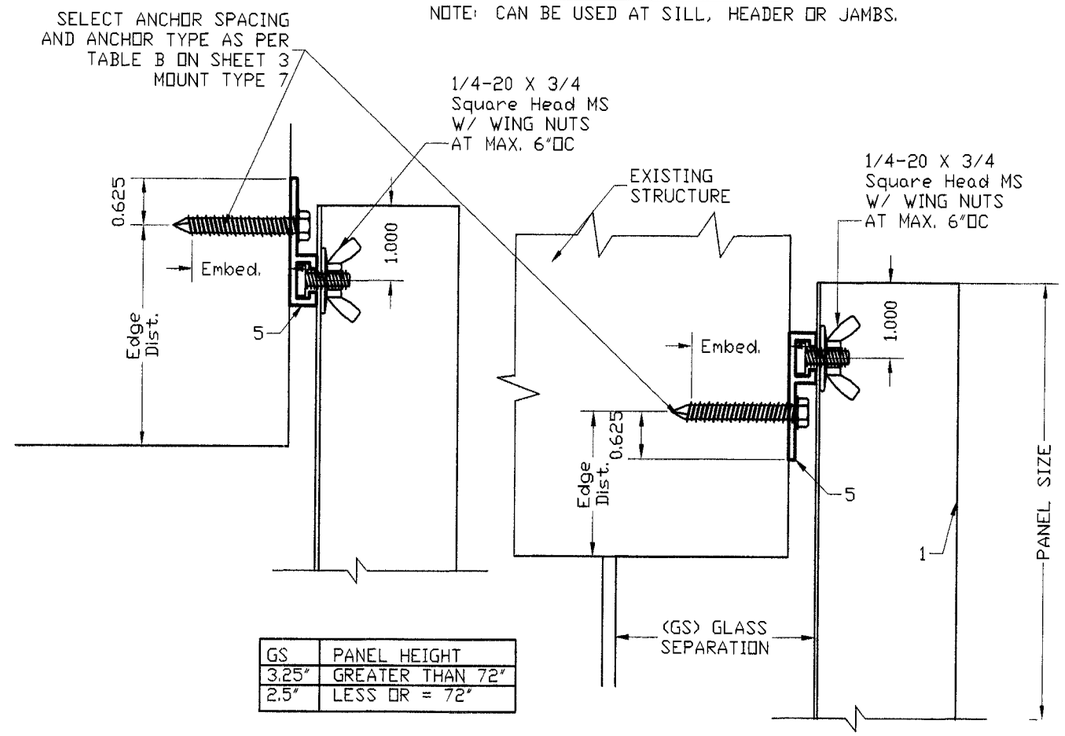

GS	PANEL HEIGHT
3.25"	GREATER THAN 72"
2.5"	LESS OR = 72"

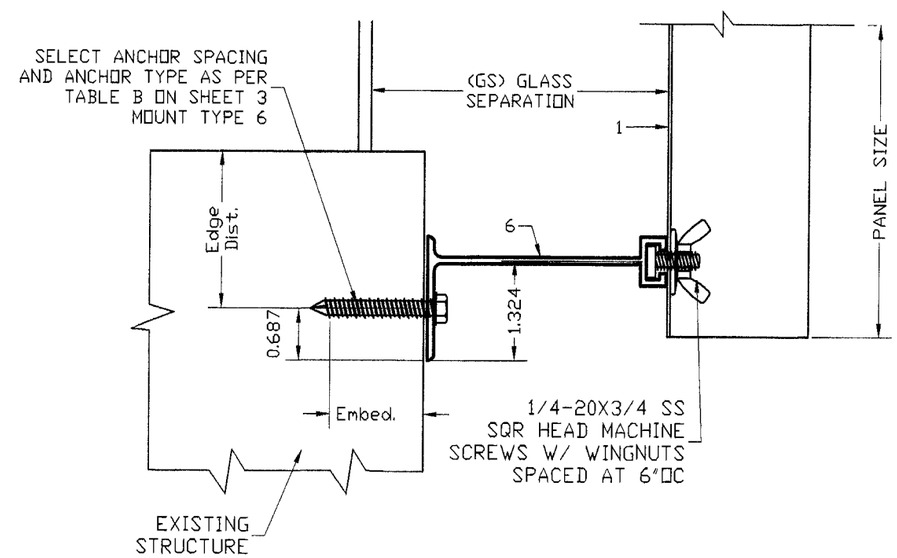

MOUNT TYPE 6

NOTE: CAN BE USED AT SILL, HEADER OR JAMBS.

GUARDIAN
BUILDING PRODUCTS
ASHLEY ALUMINUM LLC.
5120 W. CLIFTON ST.
TAMPA, FL 33634
TEL: (813) 884-0444
TEL: (800) 749-4067
FAX: (813) 884-0255

PRODUCT:
0.050 ALUMINUM STORM PANEL

Engineering:
EngCo Inc.
CA 8116
6971 W. Sunrise Blvd. 104
Plantation, Fl. 33313
Tel.: (954) 585-0304
Fax: (954) 585-0305

FEB 06 2007

Pedro De Figueiredo, PE
PE 52609

DRAFTING:
PK DRAFTING & MORE

Date: 12/09/06
Scale: NA
Design by: PPMF

PRODUCT CONTROL DIVISION:

Approved as complying with the Florida Building Code
Date 03/01/2007
NOA# 05-1102.03
Miami Dade Product Control Division
By

Drawing Number
06-362

MOUNT TYPE 9

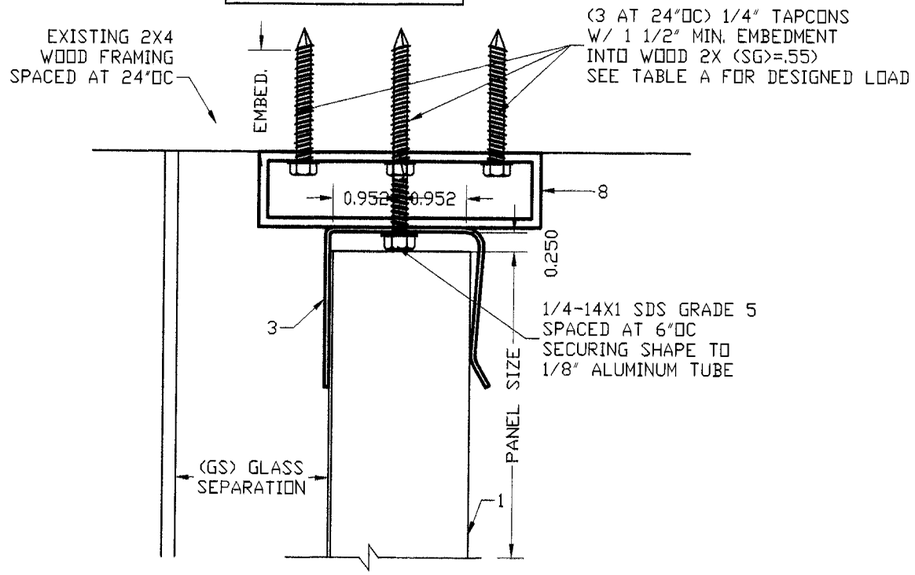

GS	PANEL HEIGHT
3.25"	GREATER THAN 72"
2.5"	LESS OR = 72"

MOUNT TYPE 9A

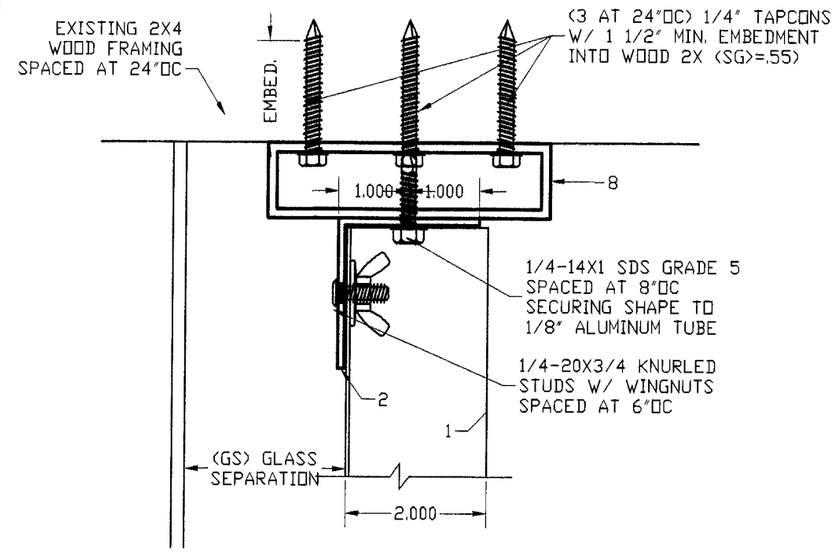

GS	PANEL HEIGHT
3.25"	GREATER THAN 72"
2.5"	LESS OR = 72"

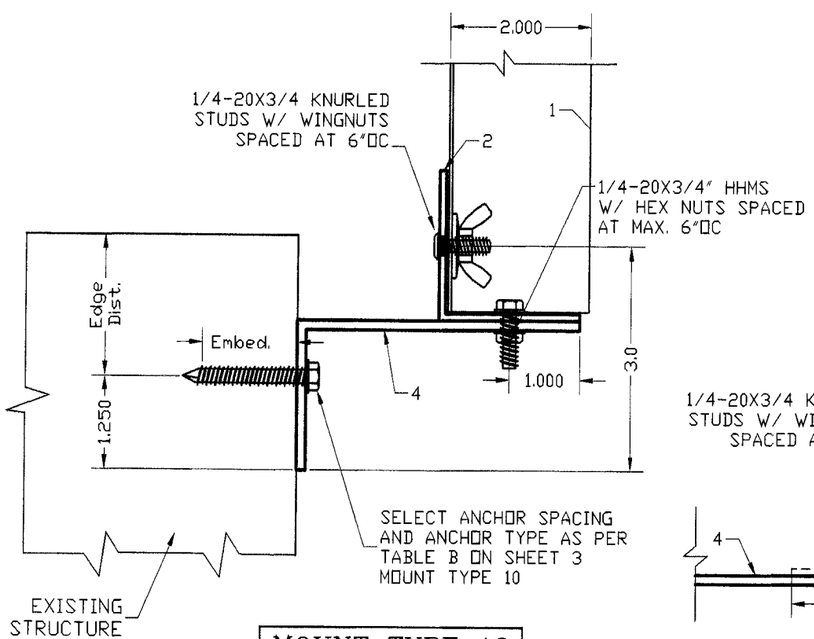

MOUNT TYPE 10

NOTE: CAN BE USED AT SILL, HEADER OR JAMBS.

STUD ANGLE CAN BE USED REVERSED ON MOUNTS 10 AND 10A

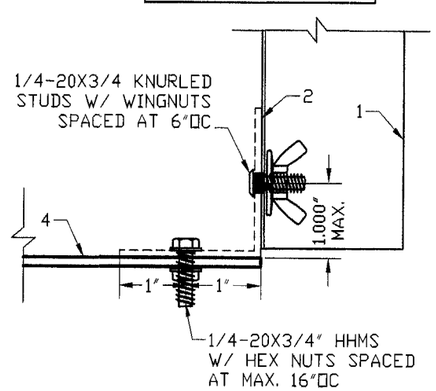

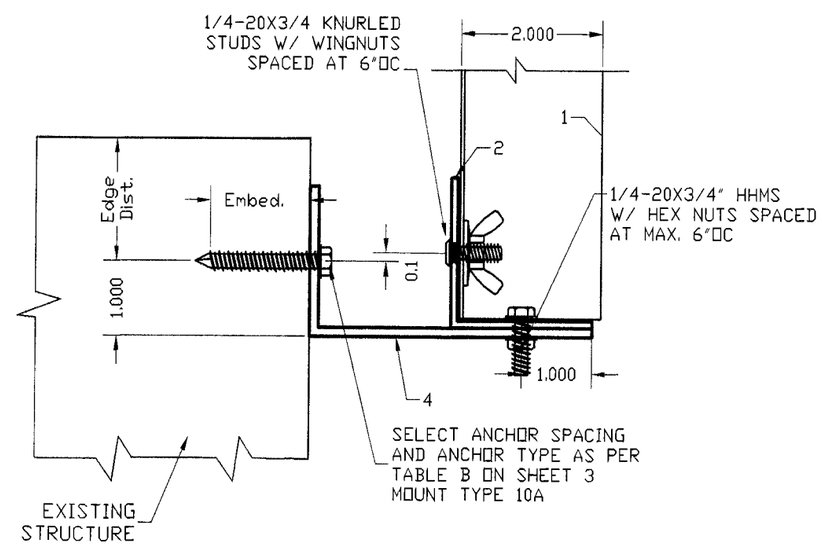

MOUNT TYPE 10A

NOTE: CAN BE USED AT SILL, HEADER OR JAMBS.

GUARDIAN
BUILDING PRODUCTS
ASHLEY ALUMINUM LLC.
5120 W. CLIFTON ST.
TAMPA, FL 33634
TEL: (813) 884-0444
TEL: (800) 749-4067
FAX: (813) 884-0255

PRODUCT:
0.050
ALUMINUM
STORM PANEL

Engineering:
EngCo Inc.
CA 8116
6971 W. Sunrise Blvd. 104
Plantation, Fl. 33313
Tel.: (954) 585-0304
Fax: (954) 585-0305

FEB 06 2007

Pedro De Figueiredo, PE
PE 52609

DRAFTING:
PK DRAFTING & MORE

Date: 12/09/06
Scale: NA
Design by: PPMF

PRODUCT CONTROL DIVISION:

Approved as complying with the Florida Building Code
Date 03/01/2007
NOA# 05-1102.03
Miami Dade Product Control Division
By Helmy A. Mel

Drawing Number
06-362

DETAIL A
INSET CLOSURE

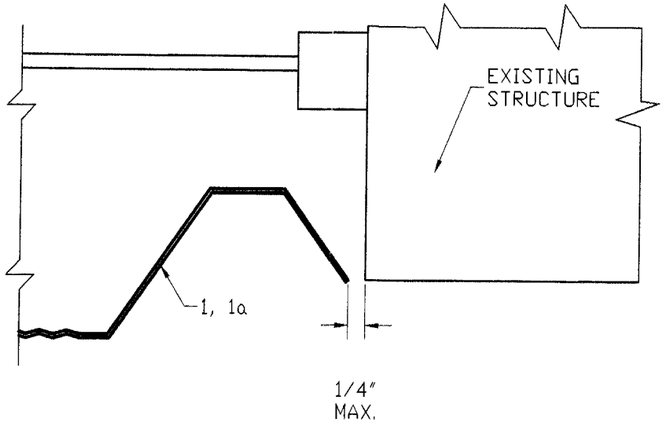

DETAIL B
WALL CLOSURE

GS	PANEL HEIGHT
3.0"	GREATER THAN 72"
2.5"	LESS OR = 72"

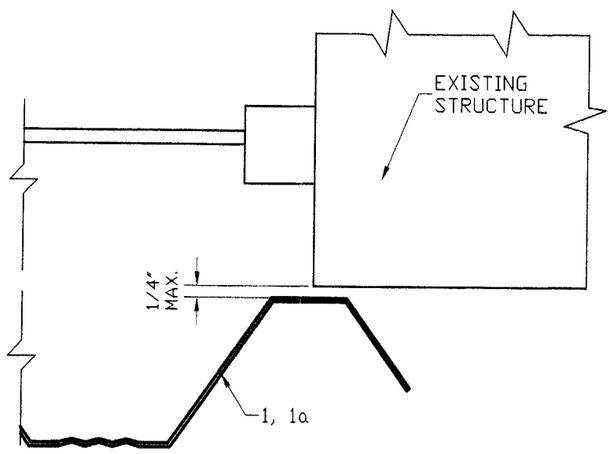

DETAIL C
WALL OVERLAP

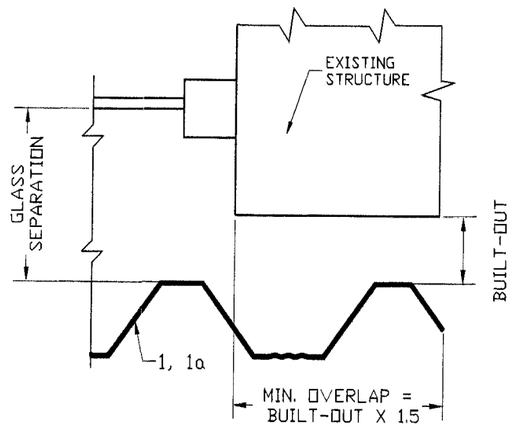

FBC 2004 SECTION 2413.7:
"STORM SHUTTERS MUST COMPLETELY COVER AN OPENING IN ALL DIRECTIONS. THE MAXIMUM SIDE CLEARANCE BETWEEN THE SHUTTER AND A WALL OR INSET SURFACE SHALL BE 1/4" (DETAILS A & B). ANY DISTANCE IN EXCESS OF 1/4" SHALL REQUIRE END CLOSURE (DETAILS D & E) OR SHUTTER OVERLAP (DETAIL C), WHERE APPLICABLE. SHUTTER OVERLAP SHALL BE A MINIMUM OF 1.5 TIMES THE SIDE CLEARANCE BETWEEN THE SHUTTER AND WALL."

DETAIL D
BUILT-OUT
SIDE CLOSURE

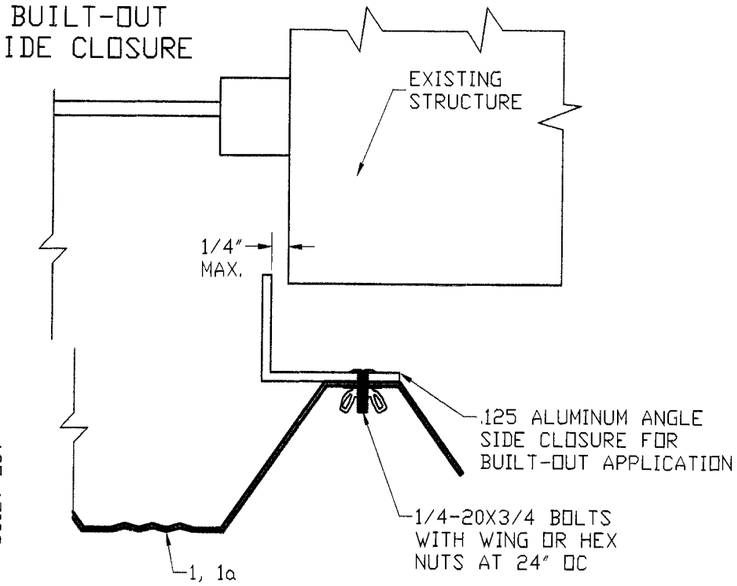

DETAIL E
INSET EXTENDED
CLOSURE

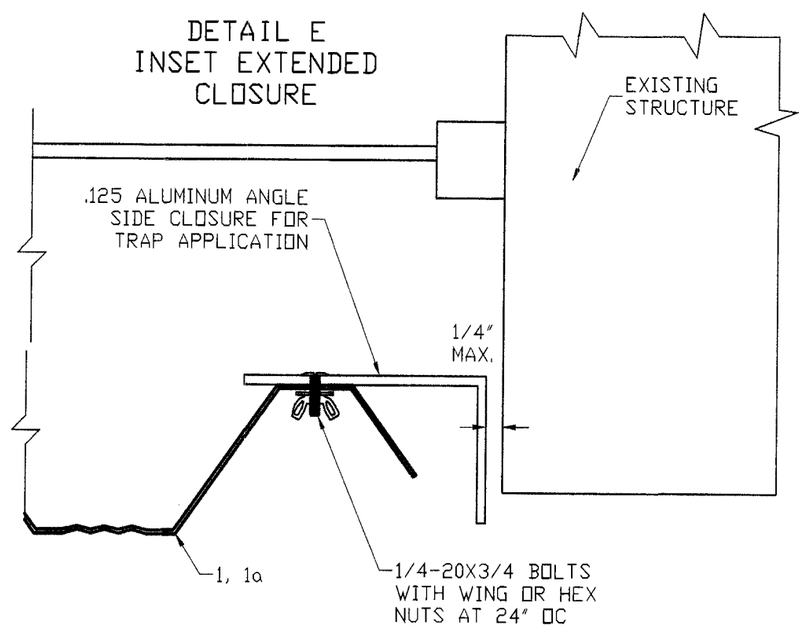

DETAIL F
CORNER ANGLE

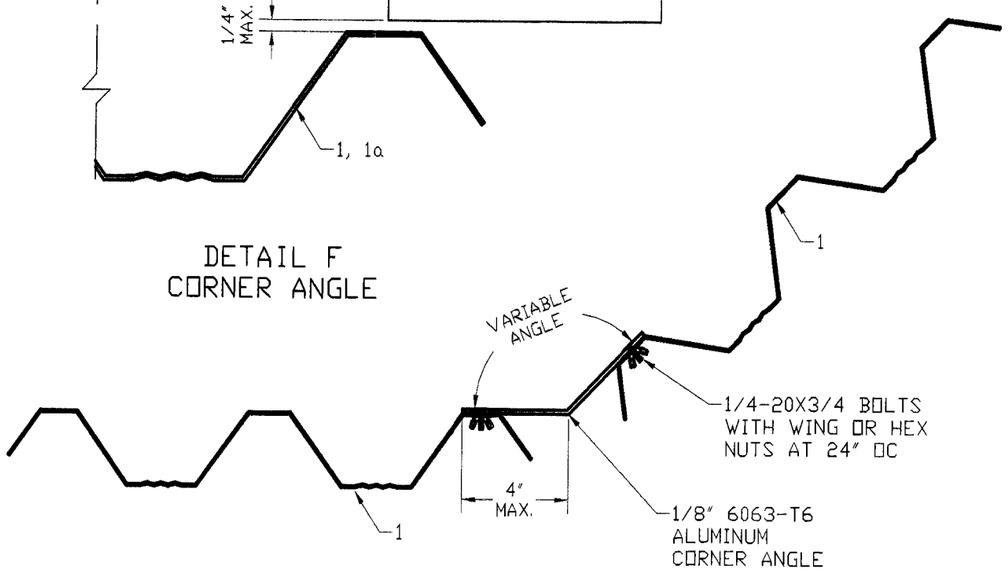

GUARDIAN
BUILDING PRODUCTS
ASHLEY ALUMINUM LLC.
5120 W. CLIFTON ST.
TAMPA, FL 33634
TEL: (813) 884-0444
TEL: (800) 749-4067
FAX: (813) 884-0255

PRODUCT:
0.050 ALUMINUM STORM PANEL

Engineering:
EngCo Inc.
CA 8116
6971 W. Sunrise Blvd. 104
Plantation, Fl. 33313
Tel.: (954) 585-0304
Fax: (954) 585-0305

FEB 06 2007
Pedro De Figueiredo, PE
PE 52609

DRAFTING:
PK DRAFTING & MORE

Date: 12/09/06
Scale: NA
Design by: PPMF

PRODUCT CONTROL DIVISION:
Approved as complying with the Florida Building Code
Date 03/01/2007
NOA# 05-1102.03
Miami Dade Product Control Division
By

Drawing Number
06-362