MIAMI-DADE COUNTY

BUILDING CODE COMPLIANCE OFFICE (BCCO)
PRODUCT CONTROL DIVISION

MIAMI-DADE COUNTY, FLORIDA
METRO-DADE FLAGLER BUILDING
140 WEST FLAGLER STREET, SUITE 1603
MIAMI, FLORIDA 33130-1563
(305) 375-2901 FAX (305) 375-2908
www.buildingcodeonline.com

NOTICE OF ACCEPTANCE (NOA)

Air Master Awning, Inc.
P.O. BOX 2097
Barceloneta, PR 00617

SCOPE:

This NOA is being issued under the applicable rules and regulations governing the use of construction materials. The documentation submitted has been reviewed by Miami-Dade County Product Control Division and accepted by the Board of Rules and Appeals (BORA) to be used in Miami Dade County and other areas where allowed by the Authority Having Jurisdiction (AHJ).

This NOA shall not be valid after the expiration date stated below. The Miami-Dade County Product Control Division (In Miami Dade County) and/or the AHJ (in areas other than Miami Dade County) reserve the right to have this product or material tested for quality assurance purposes. If this product or material fails to perform in the accepted manner, the manufacturer will incur the expense of such testing and the AHJ may immediately revoke, modify, or suspend the use of such product or material within their jurisdiction. BORA reserves the right to revoke this acceptance, if it is determined by Miami-Dade County Product Control Division that this product or material fails to meet the requirements of the applicable building code.

This product is approved as described herein, and has been designed to comply with the Florida Building Code, including the High Velocity Hurricane Zone.

DESCRIPTION: Series 250-IR Aluminum Single Hung Window

APPROVAL DOCUMENT: Drawing No. **1456,** titled "Series 250-IR Single Hung Impact Aluminum Windows", sheets 1 through 3 of 3, dated 10/17/05 prepared by W.W. Schaefer Engineering & Consulting, P.A., signed and sealed by W. W. Schaefer Engineering & Consulting, P.A., bearing the Miami-Dade County Product Control Approval stamp with the Notice of Acceptance number and approval date by the Miami-Dade County Product Control Division.

MISSILE IMPACT RATING: Large and Small Missile Impact

LABELING: Each unit shall bear a permanent label with the manufacturer's name or logo, city, state and following statement: "Miami-Dade County Product Control Approved", unless otherwise noted herein.

RENEWAL of this NOA shall be considered after a renewal application has been filed and there has been no change in the applicable building code negatively affecting the performance of this product.

TERMINATION of this NOA will occur after the expiration date or if there has been a revision or change in the materials, use, and/or manufacture of the product or process. Misuse of this NOA as an endorsement of any product, for sales, advertising or any other purposes shall automatically terminate this NOA. Failure to comply with any section of this NOA shall be cause for termination and removal of NOA.

ADVERTISEMENT: The NOA number preceded by the words Miami-Dade County, Florida, and followed by the expiration date may be displayed in advertising literature. If any portion of the NOA is displayed, then it shall be done in its entirety.

INSPECTION: A copy of this entire NOA shall be provided to the user by the manufacturer or its distributors and shall be available for inspection at the job site at the request of the Building Official.

This NOA consists of this page 1 and evidence pages E-1, as well as approval document mentioned above.

The submitted documentation was reviewed by **Herminio F. Gonzalez, P.E., Director, BCCO**

02/03/2006

PRODUCT CONTROL ACCEPTED

NOA No 05-1121.07
Expiration Date: February 23, 2011
Approval Date: February 23, 2006

NOTICE OF ACCEPTANCE: EVIDENCE SUBMITTED

A. DRAWINGS

1. Manufacturers die drawings and sections.
2. Drawing No. **1456,** titled "Series 250-Ir Single Hung Impact Aluminum Windows", sheets 1 through 3 of 3, prepared by W.W. Schaefer Engineering & Consulting, P.A., dated 10/17/05, signed and sealed by W.W. Schaefer Engineering & Consulting, P.A.

B. TESTS

1. Test reports on 1) Air Infiltration Test, per FBC, TAS 202-94
   2) Uniform Static Air Pressure Test, Loading per FBC, TAS 202-94
   3) Water Resistance Test, per FBC, TAS 202-94
   4) Large Missile Impact Test per FBC, TAS 201-94

   along with installation diagram of aluminum fixed window, prepared by Hurricane Test Laboratory, LLC, Test Report No. **HTL-0263-0828-05,** dated 08/29/-09/02/05, signed and sealed by Vinu J. Abraham, P.E.

C. CALCULATIONS

1. Anchor Calculation and Structural analysis, prepared by W.W. Schaefer Engineering & Consulting, P.A., dated 10/31/05, signed and sealed by Warren W. Schaefer, P.E.
   Complies with ASTM E1300-02

D. QUALITY ASSURANCE

1. Miami Dade Building Code Compliance Office (BCCO).

E. MATERIAL CERTIFICATIONS

1. Notice of Acceptance No. **01-0205.02** issued to Solutia Inc. for "Saflex/Keepsafe Maximum" dated 05/17/01, expiring on 05/21/06.

F. STATEMENTS

1. Statement letter of conformance and no financial interest, dated 10/31/05, signed and sealed by Warren W. Scheafer, P.E.

G. OTHER

1. Letter from the consultant, dated January 22, 2006, stating that the product is in compliance with the Florida Building Code (FBC).

for M Khan

Herminio F. Gonzalez, P.E.
Director, Building Code Compliance Office
NOA No 05-1121.07
Expiration Date: February 23, 2011
Approval Date: February 23, 2006

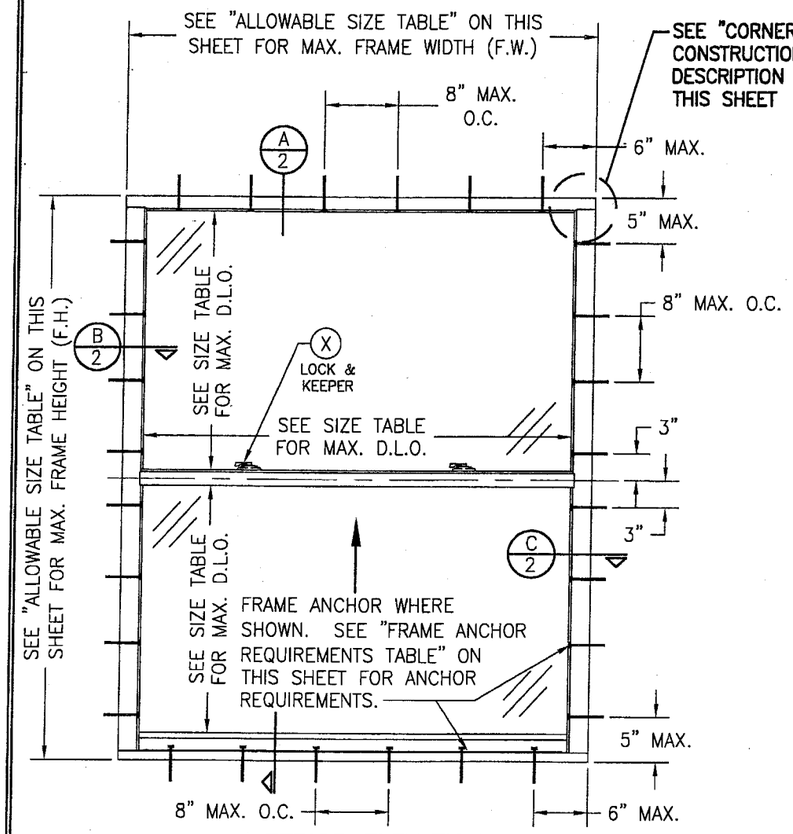

EXTERIOR ELEVATION
SINGLE HUNG WINDOW
SCALE: 3/4" = 1'-0"

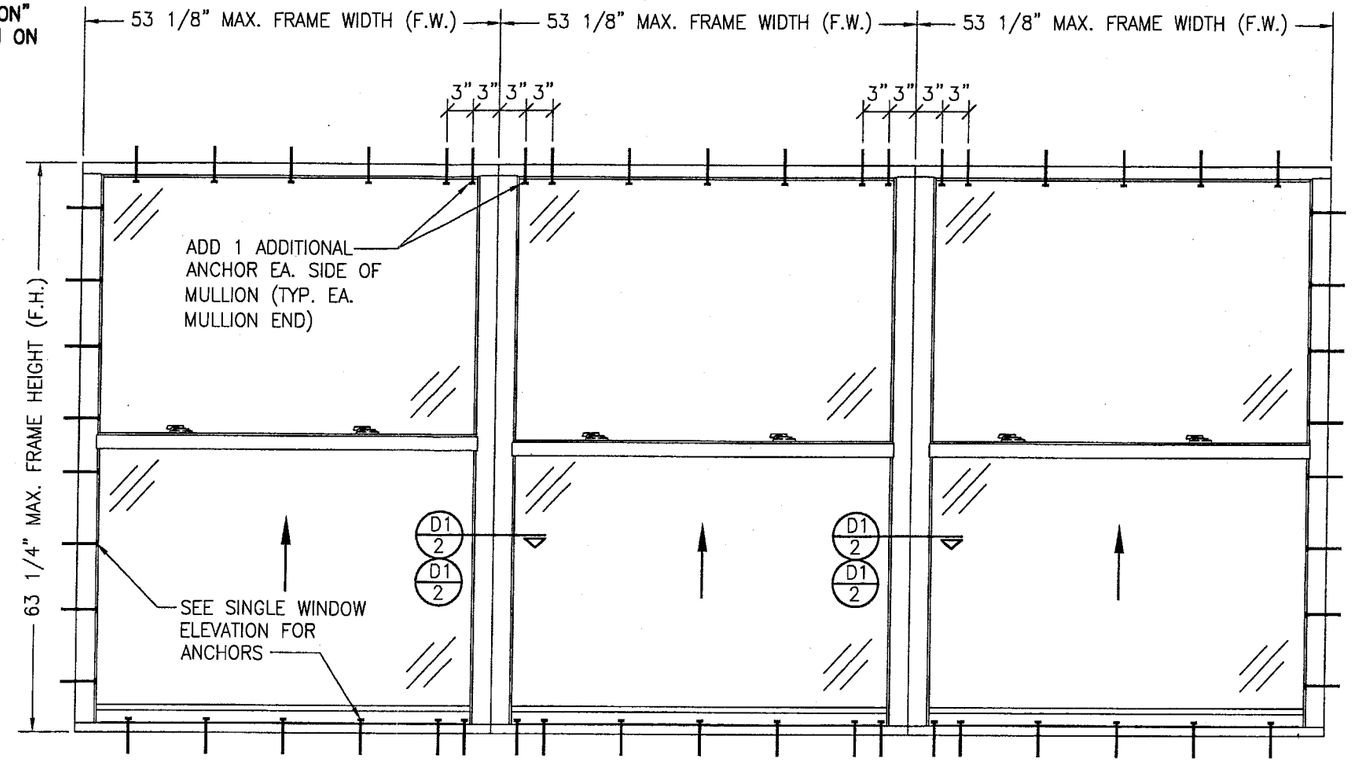

EXTERIOR ELEVATION
MULTIPLE SINGLE HUNG WINDOWS
SCALE: 3/4" = 1'-0"
(MAX. FOUR UNITS MAY BE COMBINED IN ONE OPENING)
SEE SINGLE WINDOW ELEVATION FOR DETAIL NOT SHOWN

GENERAL NOTES

1. THESE WINDOW SYSTEMS HAVE BEEN TESTED, ANALYZED AND APPROVED FOR DESIGN PRESSURES NOT TO EXCEED THOSE SHOWN IN THE "ALLOWABLE DESIGN LOADS" TABLE.
2. BUCKING, OPENINGS & BUCKING FASTENERS MUST BE PROPERLY DESIGNED & INSTALLED TO TRANSFER WIND LOADS TO THE STRUCTURE.
3. ALL HARDWARE & FASTENERS SHALL BE IN ACCORDANCE WITH THESE DRAWINGS & MAY NOT VARY UNLESS SPECIFICALLY MENTIONED ON THE DRAWINGS.
4. THE DETAILS & SPECIFICATIONS SHOWN HEREIN REPRESENT THE PRODUCTS TESTED & PROPOSED FOR WATER, AIR, IMPACT, CYCLIC & UNIFORM STATIC AIR PRESSURE TESTING IN CONFORMANCE WITH THE 2004 FLORIDA BUILDING CODE PROTOCOLS TAS-201, 202 & 203 FOR LARGE MISSILE IMPACT WINDOWS.
5. THESE WINDOW SYSTEMS HAVE BEEN DESIGNED IN ACCORDANCE WITH THE 2004 FLORIDA BUILDING CODE (FBC) INCLUDING HIGH VELOCITY HURRICANE ZONES (HVHZ).
6. IMPACT SHUTTERS ARE NOT REQUIRED WITH THESE WINDOWS.
7. ALL ANCHORS SHALL BE INSTALLED AS SPECIFIED ON THESE DRAWINGS. SPECIFIED EMBEDMENT TO BASE MATERIAL SHALL BE BEYOND WALL FINISH OR STUCCO.
8. ALL FRAME ANCHORS SECURING WINDOW/DOOR FRAME TO PRESSURE TREATED BUCKS OR WOOD FRAMING SHALL BE CAPABLE OF RESISTING CORROSION CAUSED BY THE PRESSURE TREATING CHEMICALS IN THE WOOD.
9. MATERIALS, INCLUDING BUT NOT LIMITED TO STEEL SCREWS, THAT COME INTO CONTACT WITH OTHER DISSIMILAR MATERIALS SHALL MEET THE REQUIREMENTS OF 2004 FLORIDA BUILDING CODE SECTION 2003.8.4.

CORNER CONSTRUCTION

FRAME ASSEMBLY: THE HORIZONTAL MEMBERS RAN THROUGH WHILE THE VERTICAL MEMBERS ARE SQUARE CUT, BUTTED, ATTACHED TO THE HORIZONTALS WITH 2 NO. 8 X 3/4" P.H. SCREWS AND SEALED WITH H.B. FULLER PTI 2000 SEAM SEALER.
VENT ASSEMBLY: THE HORIZONTAL MEMBERS RAN THROUGH WHILE THE VERTICAL MEMBERS ARE SQUARE CUT, BUTTED, ATTACHED TO THE HORIZONTALS WITH 2 NO. 8 X 3/4" P.H. SCREWS PER CORNER AT THE TOP RAIL AND 1 PER CORNER AT THE BOTTOM RAIL AND SEALED WITH H.B. FULLER PTI 2000 SEAM SEALER.

ALLOWABLE DESIGN LOAD	
POSITIVE	NEGATIVE
60 PSF	60 PSF
SINGLE AND MULLED UNITS	

FRAME ANCHOR REQUIREMENTS TABLE			
OPENING TYPE (SUBSTRATE)	JAMB TO OPENING FASTENER TYPE	MINIMUM EMBED	MINIMUM EDGE DIST.
MIN. 2X4 WOOD FRAME OR BUCK	NO. 10 SMS SCREW	1 1/4"	3/4"
CMU/CONCRETE	(1) 3/16" CONCRETE SCREW	1 1/4"	2"
MIN. 18 GAGE 33 KSI METAL STUD	10-16 SELF TAPPING SCREW	FULL	1/2"
(1) CONCRETE SCREWS SHALL BE ELCO OR ITW RAMSET/RED HEAD TAPCONS, HILTI KWIK-CON II OR POWERS RAWL TAPPER (HARDENED STEEL OR S.S.).			

ALLOWABLE SIZE TABLE (SINGLE WINDOWS)			
MAXIMUM FRAME HEIGHT (IN.)	MAXIMUM FRAME WIDTH (IN.)	MAXIMUM VERTICAL D.L.O.'S (IN.)	MAXIMUM HORIZONTAL D.L.O.'S (IN.)
63 1/4"	53 1/8"	28 3/8"	48 3/8"
74 1/4"	37 1/8"	33 7/8"	32 3/8"

Approved as complying with the Florida Building Code
Date 02/23/06
NOA# 05-1121.02
Miami-Dade Product Control Division
By

DRAWN BY: K.P.S.	CHECKED BY: W.W.S.
PLOT: 1=16	DATE: 10/17/05

NO.	REVISION DESCRIPTION	BY	DATE

DRAWING TITLE
SERIES 250-IR SINGLE HUNG IMPACT ALUMINUM WINDOWS

MANUFACTURER
AIR MASTER AWNING, INC.
CARR. #2 INTERIOR, KM. 56.7
BARCELONETA, P.R. 00617
787-846-2110

CONSULTANTS
W. W. SCHAEFER ENGINEERING & CONSULTING, P.A.
8895 N. MILITARY TRAIL; SUITE C-204
PALM BEACH GARDENS, FL 33410
PHONE: 561-775-4902 FAX: 561-775-4903

CERTIFICATION
NOV 10 2005
WARREN W. SCHAEFER, P.E.
P.E. NO. 44135

DRAWING NO. 1456
REV.
SHEET NO. 1 OF 3

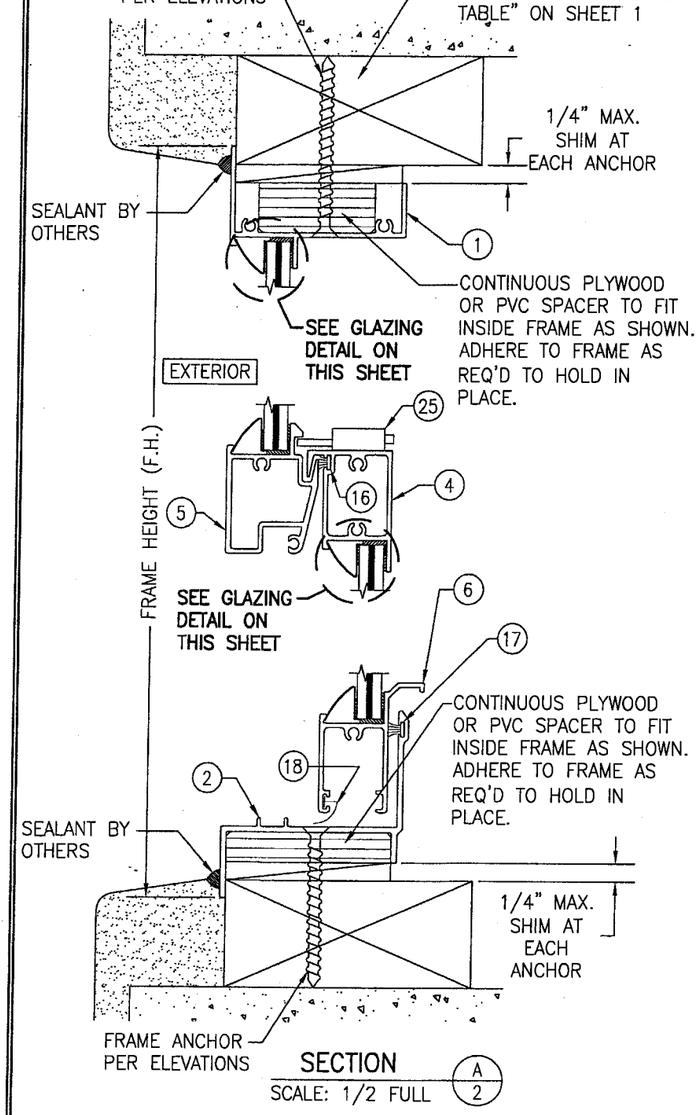

SECTION A/2
SCALE: 1/2 FULL

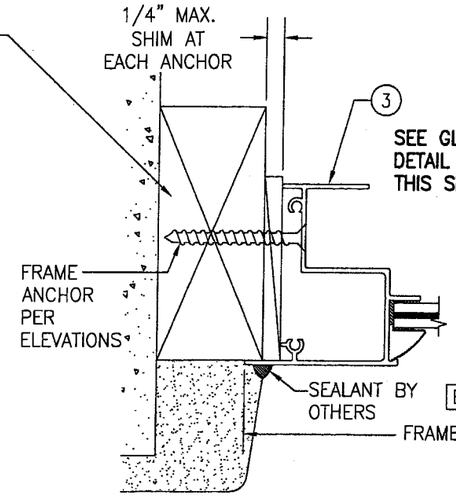

SECTION B/2
SCALE: 1/2 FULL

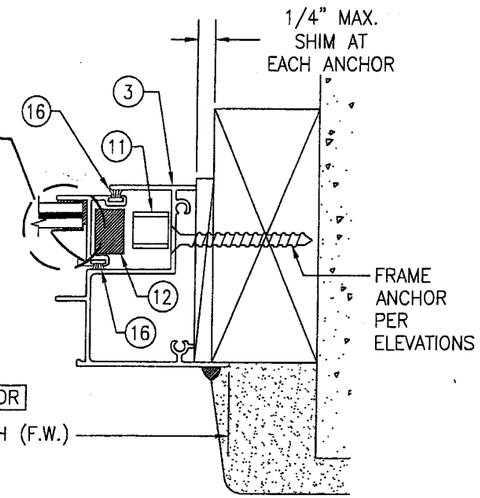

SECTION C/2
SCALE: 1/2 FULL

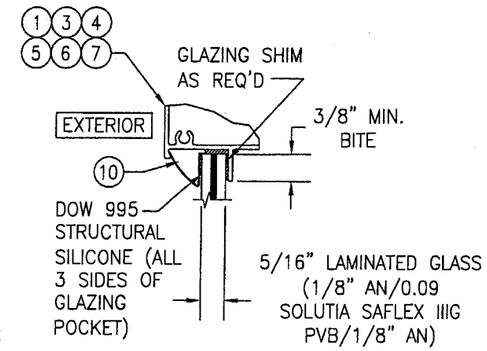

GLAZING DETAIL

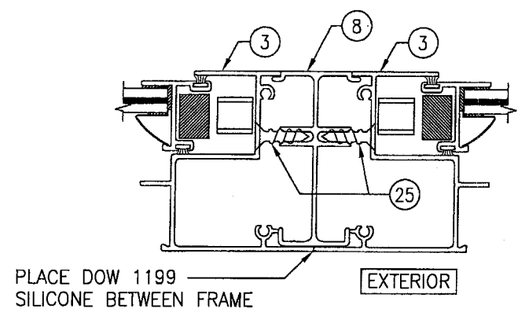

SECTION D1/2
SCALE: 1/2 FULL
FOR DETAIL NOT SHOWN, SEE OTHER SECTIONS

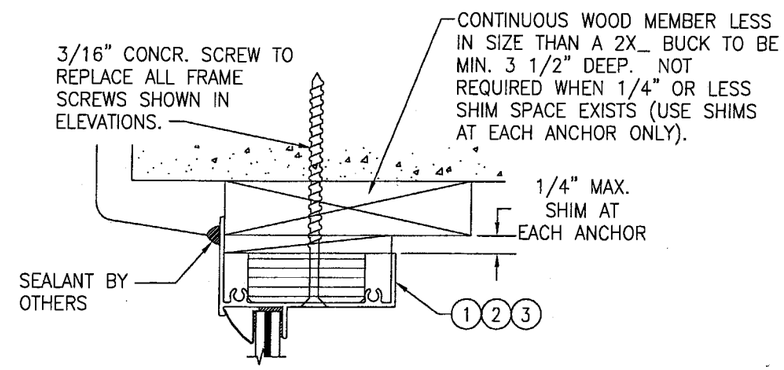

OPTIONAL DIRECT MOUNT DETAIL
TO BLOCK OR CONCRETE WITH SPACER OR SHIM
HEAD SECTION SHOWN, SIDES AND SILL SIMILAR

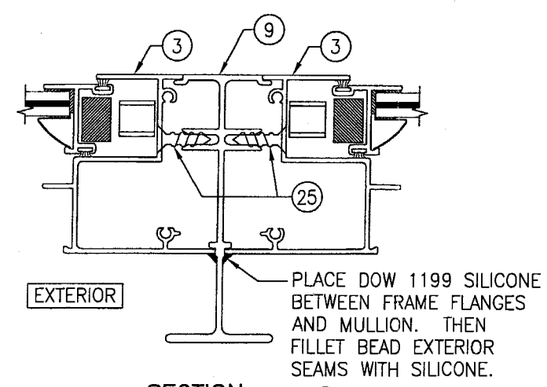

SECTION D2/2
SCALE: 1/2 FULL
FOR DETAIL NOT SHOWN, SEE OTHER SECTIONS

Approved as complying with the Florida Building Code
Date 02 23 06
NOA# 05-1121.07
Miami-Dade Product Control Division
By

DRAWN BY: K.P.S.	CHECKED BY: W.W.S.
PLOT: 1=2	DATE: 10/17/05

NO.	REVISION DESCRIPTION	BY	DATE

DRAWING TITLE
SERIES 250-IR SINGLE HUNG IMPACT ALUMINUM WINDOWS

MANUFACTURER
AIR MASTER AWNING, INC.
CARR. #2 INTERIOR, KM. 56.7
BARCELONETA, P.R. 00617
787-846-2110

CONSULTANTS
W. W. SCHAEFER ENGINEERING & CONSULTING, P.A.
8895 N. MILITARY TRAIL; SUITE C-204
PALM BEACH GARDENS, FL 33410
PHONE: 561-775-4902 FAX: 561-775-4903

CERTIFICATION
NOV 10 2005
WARREN W. SCHAEFER, P.E.
P.E. NO. 44135

DRAWING NO. 1456
REV.
SHEET NO. 2 OF 3

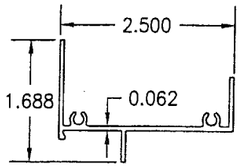

1 FRAME HEAD

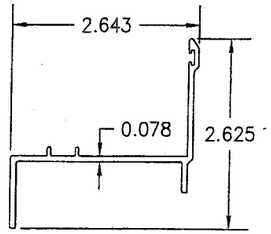

2 FRAME SILL

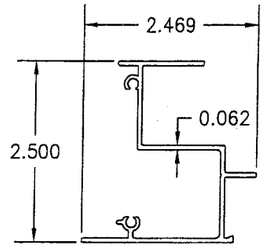

3 FRAME JAMB

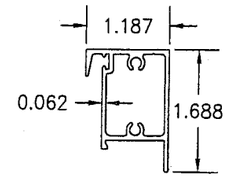

4 VENT TOP RAIL

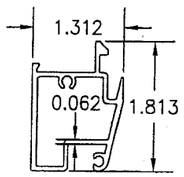

5 FIXED MEETING RAIL

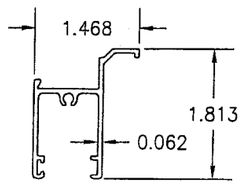

6 VENT BOTTOM RAIL

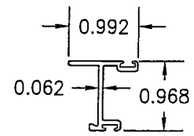

7 VENT JAMB

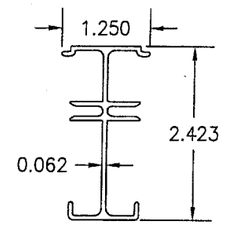

8 VERTICAL MULLION

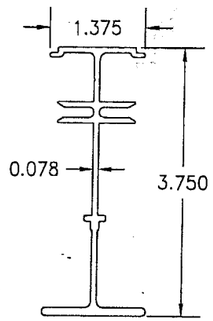

9 VERTICAL MULLION EXTENSION

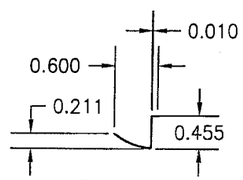

10 GLAZING BEAD

ITEM #	PART #	ITEM DESCRIPTION	MANUFACTURER/NOTES
		PARTS & EXTRUSIONS	
1	TR-63	FRAME HEAD	BONNELL OR SIMILIAR / 6063-T5
2	TR-62	FRAME SILL	BONNELL OR SIMILIAR / 6063-T5
3	TR-61	FRAME JAMB	BONNELL OR SIMILIAR / 6063-T6
4	TR-64	VENT TOP RAIL	BONNELL OR SIMILIAR / 6063-T5
5	TR-66	FIXED MEETING RAIL	BONNELL OR SIMILIAR / 6063-T5
6	TR-65	VENT BOTTOM RAIL	BONNELL OR SIMILIAR / 6063-T5
7	TR-67	VENT JAMB	BONNELL OR SIMILIAR / 6063-T5
8	TR-68	VERTICAL MULLION	BONNELL OR SIMILIAR / 6063-T6
9	TR-72	VERTICAL MULLION EXTENSION	BONNELL OR SIMILIAR / 6063-T6
10	ACL-AMB-8	ROLL FORMED GL. BEAD	CURVA TECH / 3003
11	10514	SPRING & PULLEY BALANCE	BALANCE SYSTEMS BSI
12	10696	CAM SASH BUSHING	MASTER TOOL CO.
		SEALS AND SEALANTS	
16	96817	WEATHERSTRIP	ULTRAFAB
17	22348	WEATHERSTRIP	ULTRAFAB
18	96980	VINYL	SOUTHERN PLASTICS
		FASTENERS	
21	–	NO. 10 X 3/4" F.FD. SCREW	5" FROM ENDS & 8" O.C.
		HARDWARE	
25	10698	SASH LOCK	SULLIVAN & ASSOCIATES

Approved as complying with the Florida Building Code
Date 02/23/06
NOA# 05-1121.07
Miami-Dade Product Control Division
By

DRAWN BY: K.P.S.	CHECKED BY: W.W.S.
PLOT: 1=2	DATE: 10/17/05

NO.	REVISION DESCRIPTION	BY	DATE

DRAWING TITLE
SERIES 250-IR SINGLE HUNG IMPACT ALUMINUM WINDOWS

MANUFACTURER
AIR MASTER AWNING, INC.
CARR. #2 INTERIOR, KM. 56.7
BARCELONETA, P.R. 00617
787-846-2110

CONSULTANTS
W. W. SCHAEFER ENGINEERING & CONSULTING, P.A.
8895 N. MILITARY TRAIL; SUITE C-204
PALM BEACH GARDENS, FL 33410
PHONE: 561-775-4902 FAX: 561-775-4903

CERTIFICATION
NOV 10 2005
WARREN W. SCHAEFER, P.E.
P.E. NO. 44135

DRAWING NO. 1456
REV.
SHEET NO. 3 OF 3