MIAMI-DADE COUNTY
BUILDING CODE COMPLIANCE OFFICE (BCCO)
PRODUCT CONTROL DIVISION

MIAMI-DADE COUNTY, FLORIDA
METRO-DADE FLAGLER BUILDING

140 WEST FLAGLER STREET, SUITE 1603
MIAMI, FLORIDA 33130-1563
(305) 375-2901 FAX (305) 375-2908
www.buildingcodeonline.com

NOTICE OF ACCEPTANCE (NOA)

General Impact Glass and Windows, Corp.
7840 N.W. 64th Street
Miami, Florida 33166

SCOPE:
This NOA is being issued under the applicable rules and regulations governing the use of construction materials. The documentation submitted has been reviewed by Miami-Dade County Product Control Division and accepted by the Board of Rules and Appeals (BORA) to be used in Miami Dade County and other areas where allowed by the Authority Having Jurisdiction (AHJ).

This NOA shall not be valid after the expiration date stated below. The Miami-Dade County Product Control Division (In Miami Dade County) and/or the AHJ (in areas other than Miami Dade County) reserve the right to have this product or material tested for quality assurance purposes. If this product or material fails to perform in the accepted manner, the manufacturer will incur the expense of such testing and the AHJ may immediately revoke, modify, or suspend the use of such product or material within their jurisdiction. BORA reserves the right to revoke this acceptance, if it is determined by Miami-Dade County Product Control Division that this product or material fails to meet the requirements of the applicable building code.

This product is approved as described herein, and has been designed to comply with the High Velocity Hurricane Zone of the Florida Building Code.

DESCRIPTION: " High Impact 125 " Aluminum Accordion Shutter System

APPROVAL DOCUMENT: Drawing No. 05-293, titled "High Impact 125 Accordion Shutter System", sheets 1 through 8 of 8, prepared by Tilteco, Inc., dated September 19, 2005, last revision #1 dated April 18, 2006, signed and sealed by Walter A. Tillit Jr., P.E., bearing the Miami-Dade County Product Control Approval stamp with the Notice of Acceptance number and approval date by the Miami-Dade County Product Control Division.

MISSILE IMPACT RATING: Large and Small Missile Impact

LABELING: Each unit shall bear a permanent label with the manufacturer's name or logo, city, state and the following statement: "Miami-Dade County Product Control Approved", unless otherwise noted herein.

RENEWAL of this NOA shall be considered after a renewal application has been filed and there has been no change in the applicable building code negatively affecting the performance of this product.

TERMINATION of this NOA will occur after the expiration date or if there has been a revision or change in the materials, use, and/or manufacture of the product or process. Misuse of this NOA as an endorsement of any product, for sales, advertising or any other purposes shall automatically terminate this NOA. Failure to comply with any section of this NOA shall be cause for termination and removal of NOA.

ADVERTISEMENT: The NOA number preceded by the words Miami-Dade County, Florida, and followed by the expiration date may be displayed in advertising literature. If any portion of the NOA is displayed, then it shall be done in its entirety.

INSPECTION: A copy of this entire NOA shall be provided to the user by the manufacturer or its distributors and shall be available for inspection at the job site at the request of the Building Official.

This NOA consists of this page 1, evidence submitted page E-1 as well as approval document mentioned above. The submitted documentation was reviewed by **Helmy A. Makar, P.E.**

Helmy A. Makar
05/18/2006

PRODUCT CONTROL ACCEPTED

NOA No 05-1122.08
Expiration Date: 05/18/2011
Approval Date: 05/18/2006

General Impact Glass and Windows, Corp.

NOTICE OF ACCEPTANCE: EVIDENCE SUBMITTED

A. DRAWINGS:

1. *Drawing No. 05-293, titled "High Impact 125 Accordion Shutter System", sheets 1 through 8 of 8, prepared by Tilteco, Inc., dated September 19, 2005, last revision #1 dated April 18, 2006, signed and sealed by Walter A. Tillit Jr., P.E.*

B. TESTS

1. *See Association's generic approval under 05-0397.*

C. CALCULATIONS

1. *See Association's generic approval under 05-0397.*

D. QUALITY ASSURANCE

1. *By Miami-Dade County Building Code Compliance Office.*

E. MATERIAL CERTIFICATIONS

1. *See Association's generic approval under 05-0397.*

F. STATEMENTS

1. *Release letter issued by the Comprehensive Quality Impact Products Association, Inc. High Impact 125 Accordion Shutter System., dated February 15, 2006, certifying this product to meet the criteria of product tested and approved, and allowing General Impact Glass and Windows, Corp. to use the test results approved under Miami-Dade County Approval No. 05-0397, signed by Legny Santana.*
2. *Acknowledgment letter by General Impact Glass and Windows, Corp., dated January 26, 2006, signed by Avi Bouman.*
3. *Letter by Tilteco Inc., dated November 21, 2005, certifying that the drawing (No. 05-293) prepared for General Impact Glass and Windows, Corp., signed and sealed by Mr. Walter A. Tillit, Jr., P.E., is engineering wise identical to Comprehensive Quality Impact Products Association, Inc. High Impact 125 Accordion Shutter System generic drawing (No. 05-332).*

Helmy A. Makar, P.E.
Product Control Examiner
NOA No 05-1122.08
Expiration Date: 05/18/2011
Approval Date: 05/18/2006

GENERAL NOTES:

1. HIGH IMPACT 125" ACCORDION SHUTTER SYSTEM SHOWN ON THIS PRODUCT APPROVAL DOCUMENT (P. A. D.) HAS BEEN VERIFIED FOR COMPLIANCE IN ACCORDANCE WITH THE 2004 EDITION OF THE FLORIDA BUILDING CODE.
THIS ACCORDION SHUTTER SYSTEM MAY BE INSTALLED AT HIGH VELOCITY HURRICANE ZONES.
DESIGN WIND LOADS SHALL BE DETERMINED AS PER SECTION 1620 OF THE ABOVE MENTIONED CODE. IN ORDER TO VERIFY THAT ANCHORS ON THIS P.A.D., AS TESTED, WERE NOT OVERSTRESSED, A 33% INCREASE IN ALLOWABLE LOADS FOR WIND LOADS WAS NOT USED IN THEIR ANALYSIS. A DURATION FACTOR CD=1.60 WAS USED TO VERIFY ANCHOR SPACINGS IN WOOD. HIGH IMPACT 125" ACCORDION SHUTTER SYSTEM'S ADEQUACY FOR WIND AND IMPACT LOAD HAS BEEN VERIFIED IN ACCORDANCE WITH SECTION 1609.1.4 OF THE ABOVE MENTIONED CODE AS PER FTL REPORTS # 4715 AND 4717, AS PER TAS-201, TAS-202 AND TAS-203 PROTOCOLS.

2. HIGH IMPACT 125" ACCORDION SHUTTER SYSTEM PINS USED AT BLADES KNUCKLE SHALL BE # 14 X 2 3/4" (MIN.) 410-HT MINIMUM SERIES STAINLESS STEEL SCREWS WITH 135.0 ksi YIELD STRENGTH AND 180 ksi TENSILE STRENGTH. PINS SHALL BE COATED WITH XYLAN 5000 SERIES FLUOROPOLYMER COATING AS MANUFACTURED BY WITHFORD Co. BOX 507. WEST CHESTER PA. 19381.

3. ALL ALUMINUM EXTRUSIONS SHALL BE ALUMINUM ASSOCIATION 6063-T6 ALLOY AND TEMPER, WITH Fy = 31.0 ksi MINIMUM.

4. ALL SCREWS TO BE STAINLESS STEEL 304 OR 316 AISI SERIES OR CORROSION RESISTANT COATED CARBON STEEL AS PER DIN 50018 WITH 50 ksi YIELD STRENGTH AND 90 ksi TENSILE STRENGTH.

5. BOLTS TO BE ASTM A-307 GALVANIZED STEEL, OR AISI 304 SERIES STAINLESS STEEL WITH 35 ksi MINIMUM YIELD STRENGTH.

6. SEE SHEET 8 OF 8 FOR ANCHORS SPECIFICATIONS. SEE SHEET 7 FOR MAXIMUM DESIGN LOAD VS SPAN SCHEDULE.

7. THIS HIGH IMPACT 125" ACCORDION SHUTTER SYSTEM IS PATENT PENDING. COMPONENTS OF THIS APPROVAL ARE COVERED, IN WHOLE OR IN PART BY U.S. PATENT ISSUED TO GENERAL IMPACT GLASS AND WINDOWS, CORP.

8. IT SHALL BE THE RESPONSIBILITY OF THE CONTRACTOR TO VERIFY THE SOUNDNESS OF THE STRUCTURE WHERE SHUTTER IS TO BE ATTACHED TO INSURE PROPER ANCHORAGE.
CONTRACTOR TO SEAL/CAULK ALL SHUTTER COMPONENT EDGES WHICH REMAIN IN CONTINUOUS CONTACT WITH THE BUILDING TO PREVENT WIND/RAIN INTRUSION.

9. EACH UNIT MUST BEAR A PERMANENT LABEL IN A VISIBLE PLACE WITH WARNING NOTE INSTRUCTING THE TENANT OR HOME OWNER THAT LOCK (M) MUST BE PROPERLY LOCKED DURING PERIODS OF HURRICANE WARNING. FOR EGRESS CONDITIONS, AN INSIDE LOCK (M) (WHERE KEY MUST REMAIN IN THE LOCK), OR AN EGRESS LOCK (M) SHALL BE USED.

10. SHUTTER'S MANUFACTURER STAMP SHALL BE PLACED ON THE EXPOSED SURFACE OF THE CENTERMATE "(L)" OR "(L1)".
ONE LABEL SHALL BE PLACED FOR EVERY OPENING. LABEL SHALL READ AS FOLLOWS:
GENERAL IMPACT GLASS AND WINDOWS, CORP..
HIALEAH, FL.
MIAMI-DADE COUNTY PRODUCT CONTROL APPROVED.

11. HIGH IMPACT 125" ACCORDION SHUTTER SYSTEM'S INSTALLATION SHALL COMPLY WITH SPECS INDICATED IN THIS DRAWING PLUS ANY BUILDING AND ZONING REGULATIONS PROVIDED BY THE JURISDICTION WHERE PERMIT IS APPLIED TO.

12. (a) THIS P.A.D. PREPARED BY THIS ENGINEER IS GENERIC AND DOES NOT PROVIDE INFORMATION FOR A SITE SPECIFIC PROJECT; i.e. WHERE THE SITE CONDITIONS DEVIATE FROM THE P.A.D.

(b) CONTRACTOR TO BE RESPONSIBLE FOR THE SELECTION, PURCHASE AND INSTALLATION INCLUDING LIFE SAFETY OF THIS PRODUCT, BASED ON THIS P.A.D., PROVIDED HE/SHE DOES NOT DEVIATE FROM THE CONDITIONS DETAILED ON THIS DOCUMENT. CONSTRUCTION SAFETY AT SITE IS THE CONTRACTOR'S RESPONSIBILITY.

(c) THIS P.A.D. WILL BE CONSIDERED INVALID IF ALTERED BY ANY MEANS.

(d) SITE SPECIFIC PROJECTS SHALL BE PREPARED BY A FLORIDA REGISTERED ENGINEER OR ARCHITECT WHICH WILL BECOME THE ENGINEER OF RECORD (E.O.R.) FOR THE PROJECT AND WHO WILL BE RESPONSIBLE FOR THE PROPER USE OF THE P.A.D. ENGINEER OF RECORD, ACTING AS A DELEGATED ENGINEER TO THE P.A.D. ENGINEER SHALL SUBMIT TO THIS LATTER THE SITE SPECIFIC DRAWINGS FOR REVIEW.

(e) THIS P.A.D. SHALL BEAR THE DATE AND ORIGINAL SEAL AND SIGNATURE OF THE PROFESSIONAL ENGINEER OF RECORD THAT PREPARED IT.

Approved as complying with the
Florida Building Code
Date 05/18/2006
NOA# 05-1122.08
Miami Dade Product Control
Division
By

F.B.C. (High Velocity Hurricane Zone)

4/18/06

TILTECO INC.
TILLIT TESTING & ENGINEERING COMPANY
6355 N.W. 36th. St., Ste. 305, VIRGINIA GARDENS, Fl. 33166
Phone : (305)871-1530 . Fax : (305)871-1531
EB-0006719
WALTER A. TILLIT Jr. P. E.
FLORIDA Lic. # 44167

HIGH IMPACT 125" ACCORDION SHUTTER SYSTEM

GENERAL IMPACT GLASS AND WINDOWS, CORP.
(CQIPA # 1)
7840 N.W. 64TH STREET
MIAMI, FL. 33166
PH:(305)558-8103, FAX:(305)558-6665

REV. No	DESCRIPTION	DATE	REV. No	DESCRIPTION	DATE
1	GENERAL	4/18/06	3		
2	–	–	4		

DRAWN BY: M.C.V.
9/19/05 DATE
05-293 DRAWING No
SHEET 1 OF 8

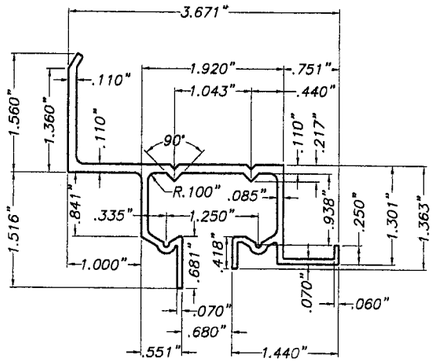

(A1) WALL HEADER FOR 125°
SCALE : 1/2" = 1"

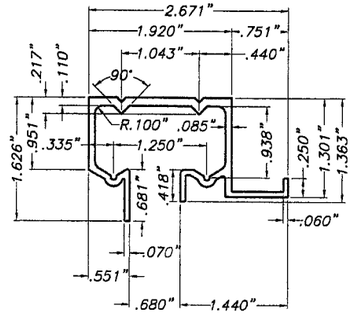

(B1) CEILING HEADER FOR 125°
SCALE : 1/2" = 1"

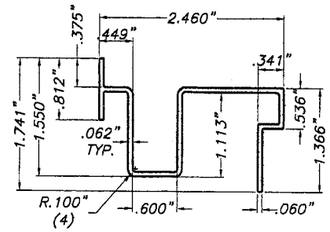

(D1) FLOOR SILL FOR 125°
SCALE : 1/2" = 1"

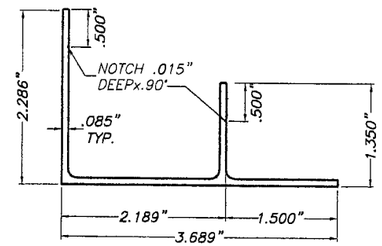

(E2) SILL ADAPTOR W/LIP FOR 125°
SCALE: 1/2"=1"

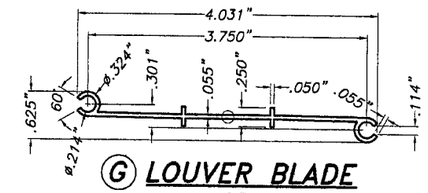

(G) LOUVER BLADE
SCALE : 1/2" = 1"

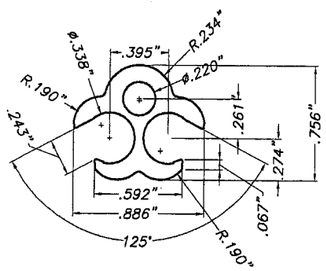

(H1) 125° SYSTEM BLADE & CENTERMATE CONNECTOR
SCALE : 1" = 1"

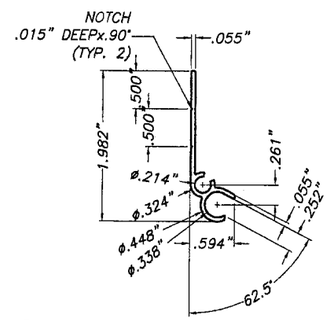

(J1) 125° SYSTEM STARTER
SCALE : 1/2" = 1"

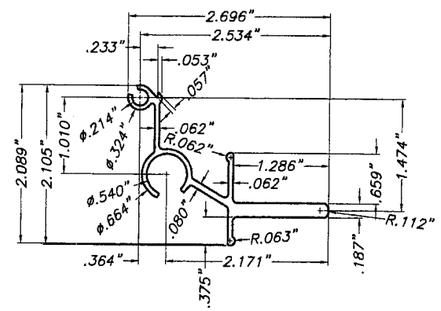

(L) 125° SYSTEM MALE CENTERMATE
SCALE : 1/2" = 1"

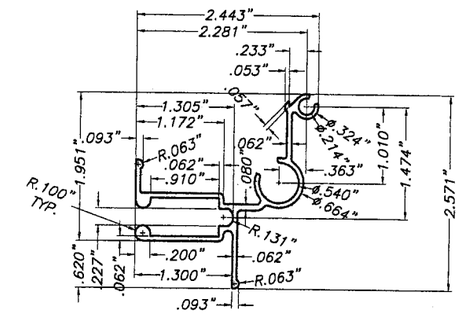

(L1) 125° SYSTEM FEMALE CENTERMATE
SCALE : 1/2" = 1"

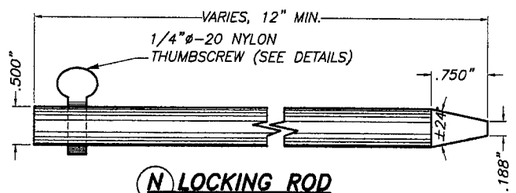

(N) LOCKING ROD
SCALE: 1/2" = 1"

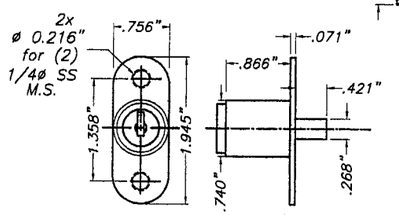

(M) CHROME PLATED ZINC ALLOY PUSH LOCK BY WIND CORPORATION (DWG# 19034)
SCALE : 1/2" = 1"

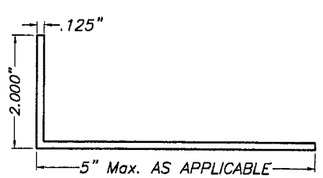

(P) B. O. ALUMINUM ANGLE
SCALE : 3/8" = 1"

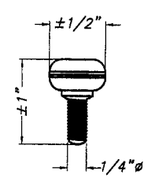

(Q) 1/4"ø-20 NYLON THUMBSCREW FOR LOCKING ROD (N)

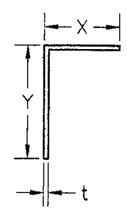

X	Y	t
1"	1"	0.062"
1"	2"	0.062"
2"	2"	0.062"
2"	3"	0.062"
2"	4"	0.062"
2"	5"	0.062"

(R) SIDE ANGLE

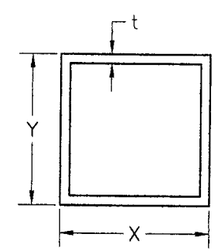

X	Y	t
2"	2"	0.125"
3"	3"	0.090"

(S) CORNER POST

Approved as complying with the Florida Building Code
Date 05/18/2006
NOA# 05-1122.08
Miami Dade Product Control Division
By Helmy A. Abdo

COMPONENTS

4/18/06

F.B.C. (High Velocity Hurricane Zone)

TILTECO INC.
TILLIT TESTING & ENGINEERING COMPANY
6355 N.W. 36th. St., Ste. 305, VIRGINIA GARDENS, FL. 33166
Phone : (305)871-1530 . Fax : (305)871-1531
EB-0006719
WALTER A. TILLIT Jr. P. E.
FLORIDA Lic. # 44167

HIGH IMPACT 125° ACCORDION SHUTTER SYSTEM

GENERAL IMPACT GLASS AND WINDOWS, CORP.
(CQIPA # 1)
7840 N.W. 64TH STREET
MIAMI, FL. 33166
PH:(305)558-8103, FAX:(305)558-6665

REV. No	DESCRIPTION	DATE	REV. No	DESCRIPTION	DATE
1	GENERAL	4/18/06	3		
2	–	–	4		

DRAWN BY: M.C.V.
9/19/05 DATE
05-293 DRAWING No
SHEET 2 OF 8

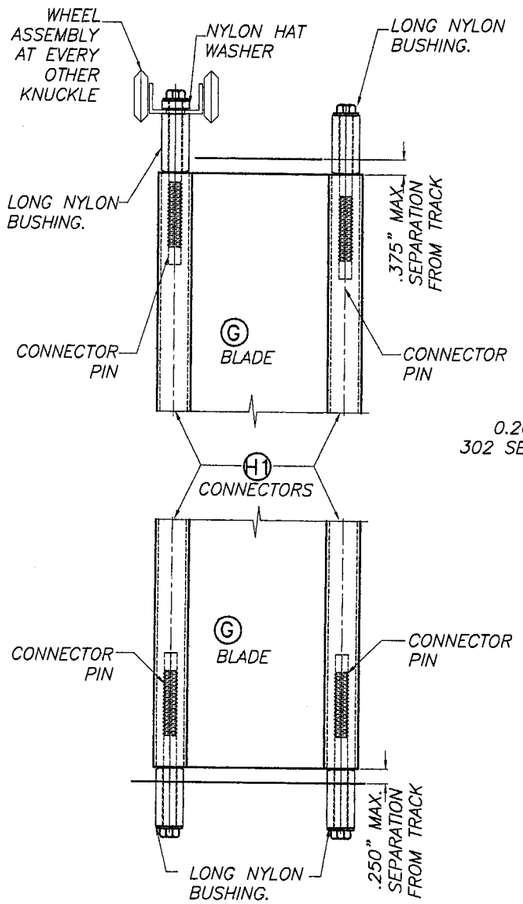

TYPICAL SHUTTER ASSEMBLY

SCALE: 3/8" = 1"

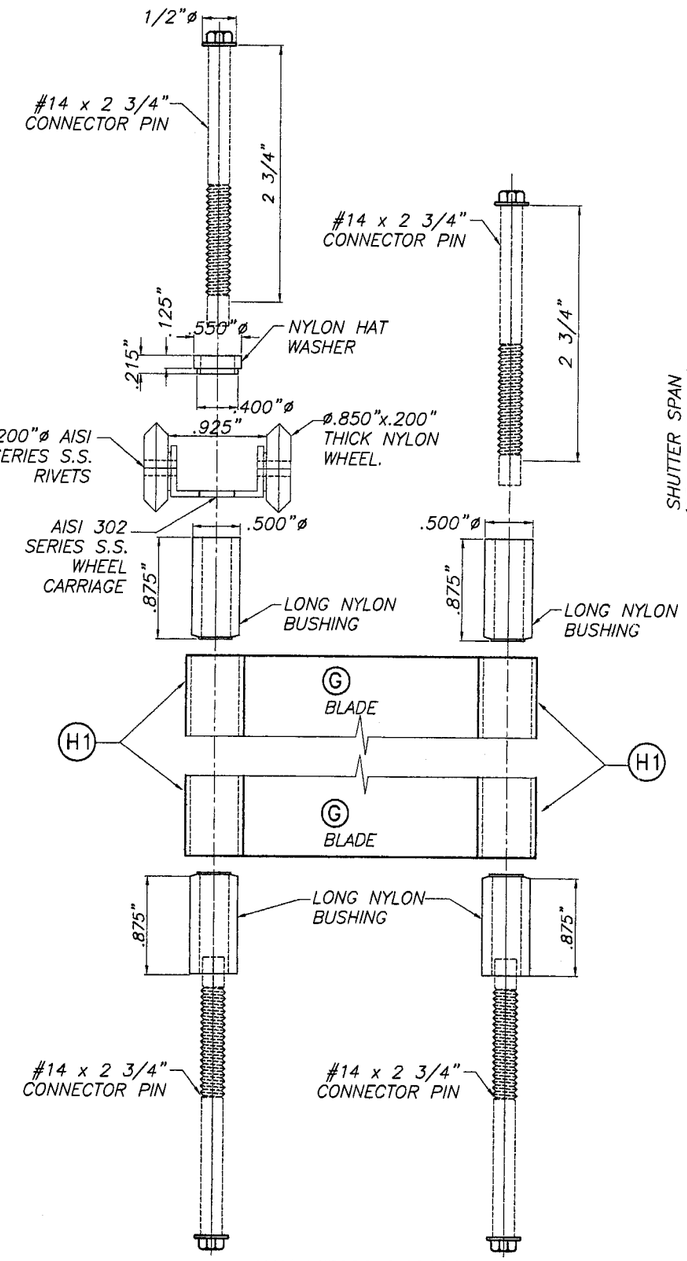

ASSEMBLY LAYOUT

N.T.S.

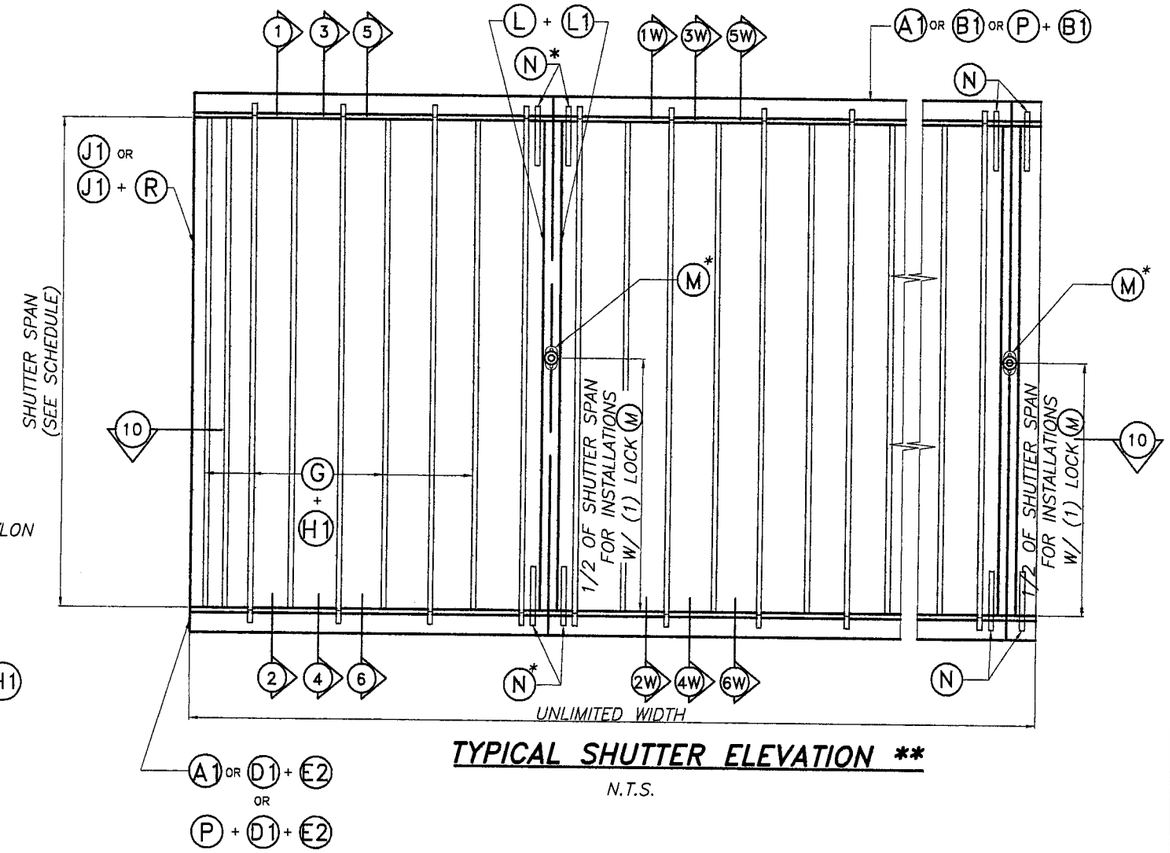

TYPICAL SHUTTER ELEVATION **

N.T.S.

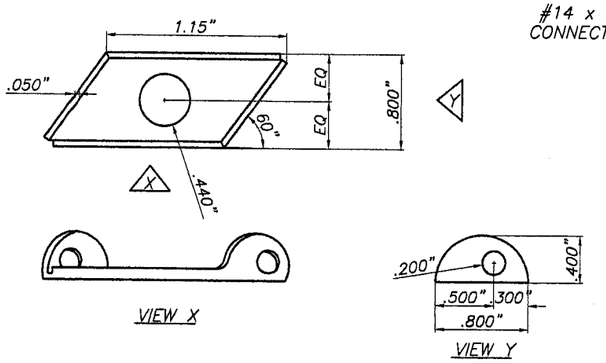

WHEEL CARRIAGE DETAIL: AISI 302 SERIES

N.T.S.

* NOTES ON LOCK (M) AND LOCKING RODS (N)

1: ONE LOCK (M) SHALL ALWAYS BE USED AT SHUTTER'S MIDSPAN AT ALL INSTALLATIONS.

2: (2) LOCKING RODS (N) SHALL ALWAYS BE USED TOP & BOTTOM AT SHUTTER'S CENTERMATES (L) & (L1) AT ALL INSTALLATIONS. LOCKING RODS (N) SHALL BE SECURED W/ 1/4"-20 NYLON THUMBSCREW.

** NOTE: SEE SECTIONS 1 THRU 6 ON SHEET 4.
SEE SECTIONS 1W THRU 6W ON SHEET 6.

Approved as complying with the Florida Building Code
Date 05/18/2006
NOA# 05-1122.08
Miami Dade Product Control Division
By Helmy A. Mahr

4/18/06

F.B.C. (High Velocity Hurricane Zone)

TILTECO INC.
TILLIT TESTING & ENGINEERING COMPANY
6355 N.W. 36th. St., Ste. 305, VIRGINIA GARDENS, Fl. 33166
Phone : (305)871-1530 . Fax : (305)871-1531
EB-0006719
WALTER A. TILLIT Jr. P. E.
FLORIDA Lic. # 44167

HIGH IMPACT 125° ACCORDION SHUTTER SYSTEM

GENERAL IMPACT GLASS AND WINDOWS, CORP.
(CQIPA # 1)
7840 N.W. 64TH STREET
MIAMI, FL. 33166
PH:(305)558-8103, FAX:(305)558-6665

REV. No	DESCRIPTION	DATE	REV. No	DESCRIPTION	DATE
1	GENERAL	4/18/06	3		
2	–	–	4		

DRAWN BY: M.C.V.
9/19/05
DATE
05-293
DRAWING No
SHEET 3 OF 8

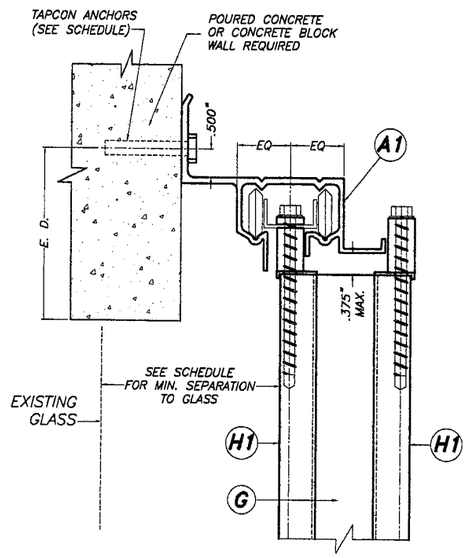

SECTION 1:
WALL MOUNTING INSTALLATION

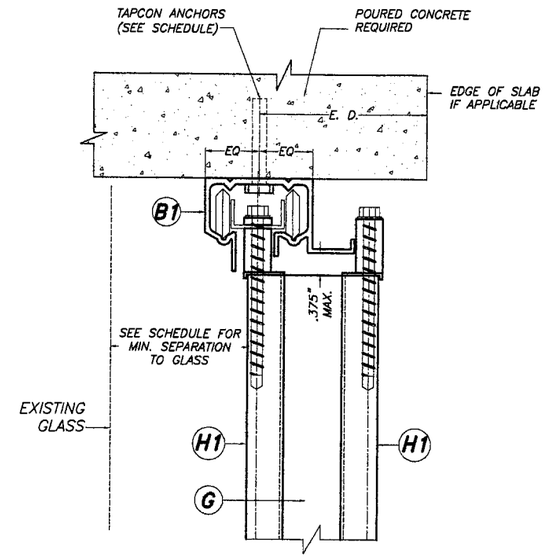

SECTION 3:
CEILING MOUNTING INSTALLATION

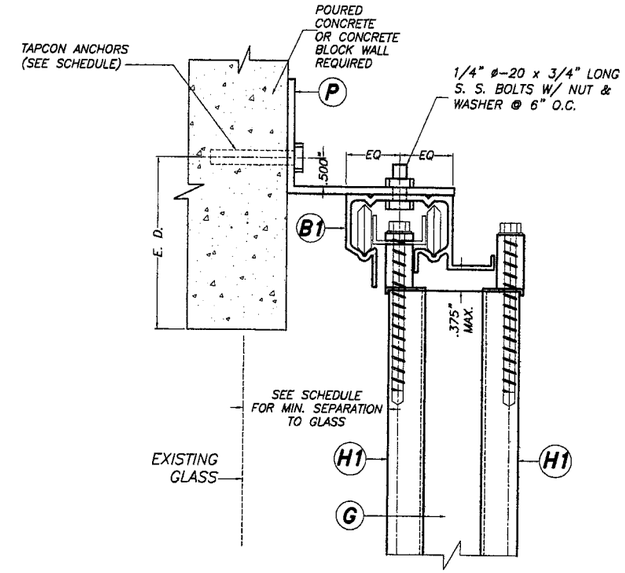

SECTION 5:
BUILD-OUT MOUNTING INSTALLATION

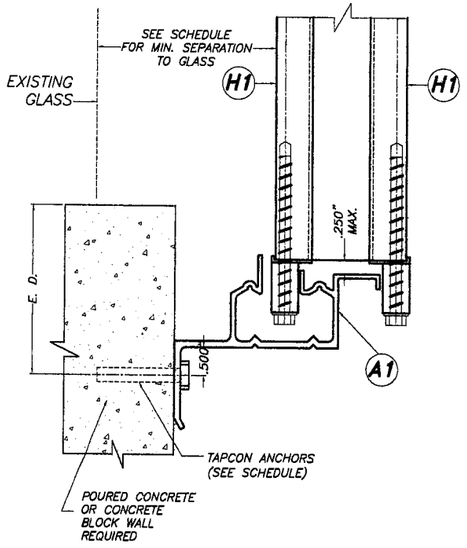

SECTION 2:
WALL MOUNTING INSTALLATION

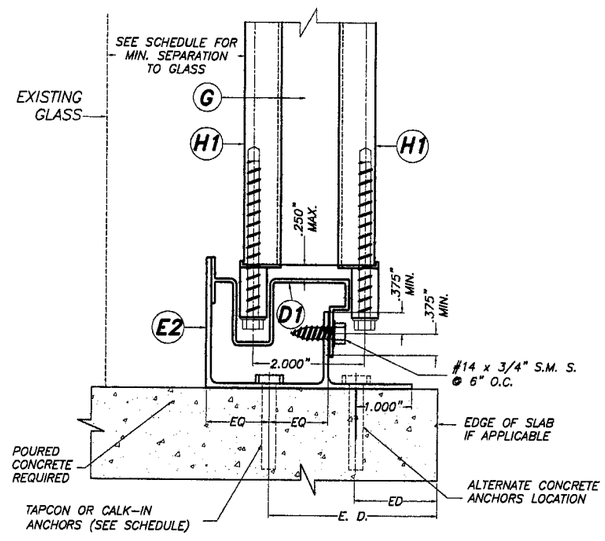

SECTION 4:
FLOOR MOUNTING INSTALLATION

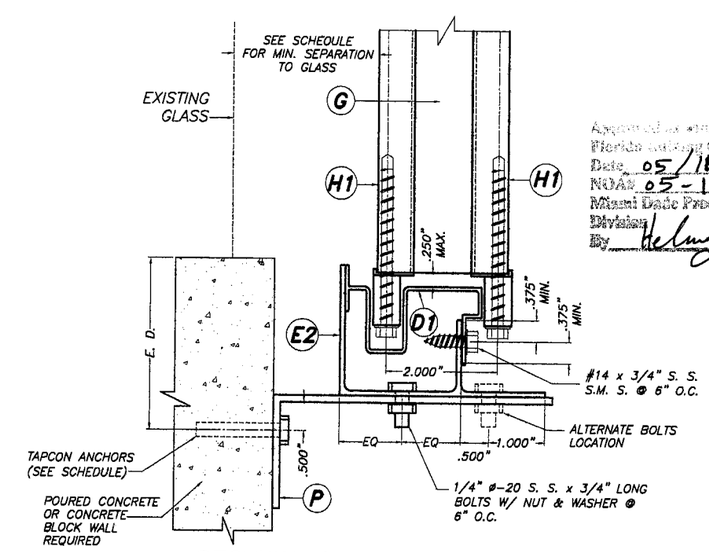

SECTION 6:
BUILD-OUT MOUNTING INSTALLATION

Approved as complying with the Florida Building Code
Date 05/18/2006
NOA# 05-1122.08
Miami Dade Product Control Division
By

F.B.C. (High Velocity Hurricane Zone)

INSTALLATION DETAILS

SCALE: 3/8"= 1'=0"

4/18/06

TILTECO INC.
TILLIT TESTING & ENGINEERING COMPANY
6355 N.W. 36th. St., Ste. 305, VIRGINIA GARDENS, Fl. 33166
Phone : (305)871-1530 , Fax : (305)871-1531
EB-0006719
WALTER A. TILLIT Jr. P. E.
FLORIDA Lic. # 44167

HIGH IMPACT 125" ACCORDION SHUTTER SYSTEM

GENERAL IMPACT GLASS AND WINDOWS, CORP.
(CQIPA # 1)
7840 N.W. 64TH STREET
MIAMI, FL. 33166
PH:(305)558-8103, FAX:(305)558-6665

REV. No	DESCRIPTION	DATE	REV. No	DESCRIPTION	DATE
1	GENERAL	4/18/06	3		
2	–	–	4		

DRAWN BY: M.C.V.
9/19/05
DATE
05-293
DRAWING No
SHEET 4 OF 8

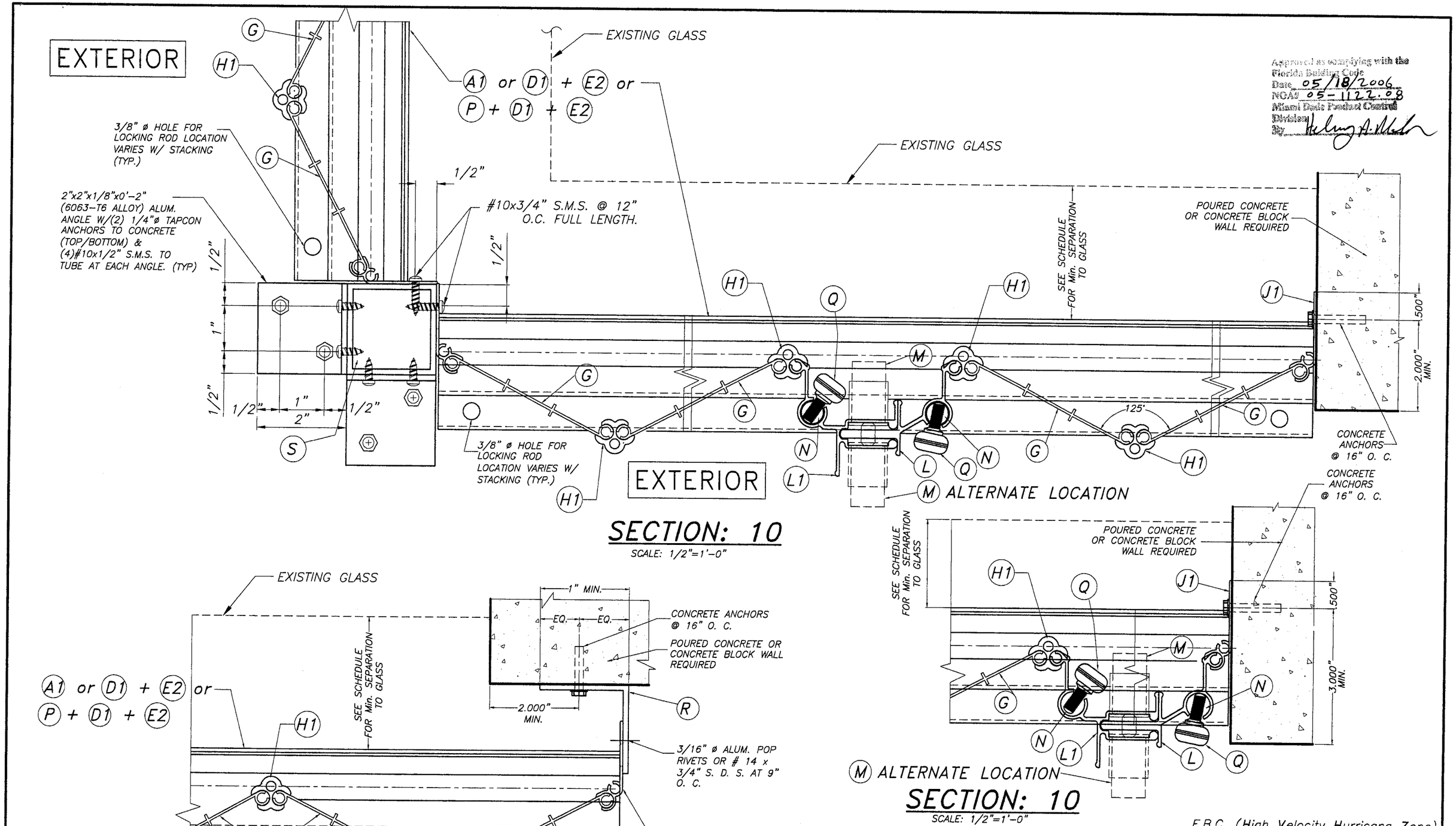

Approved as complying with the Florida Building Code
Date 05/18/2006
NOA# 05-1122.08
Miami Dade Product Control Division
By

F.B.C. (High Velocity Hurricane Zone)

9/18/06

TILTECO INC.
TILLIT TESTING & ENGINEERING COMPANY
6355 N.W. 36th. St., Ste. 305, VIRGINIA GARDENS, Fl. 33166
Phone : (305)871-1530 , Fax : (305)871-1531
EB-0006719
WALTER A. TILLIT Jr. P. E.
FLORIDA Lic. # 44167

HIGH IMPACT 125° ACCORDION SHUTTER SYSTEM

GENERAL IMPACT GLASS AND WINDOWS, CORP.
(CQIPA # 1)
7840 N.W. 64TH STREET
MIAMI, FL. 33166
PH:(305)558-8103, FAX:(305)558-6665

REV. No	DESCRIPTION	DATE	REV. No	DESCRIPTION	DATE
1	GENERAL	4/18/06	3		
2	–	–	4		

DRAWN BY: M.C.V.
9/19/05 DATE
05-293 DRAWING No
SHEET 5 OF 8

INSTALLATION DETAILS ON EXISTING WOOD BUILDINGS

SCALE: 3/8"=1'-0"

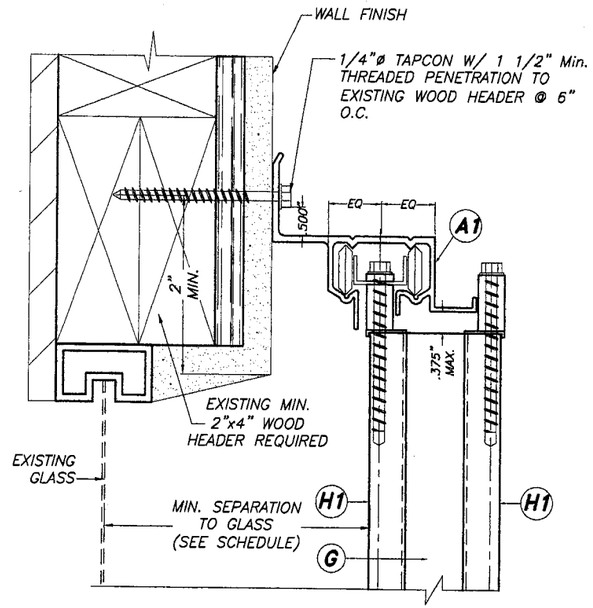

1W WALL CONNECTION AT TOP

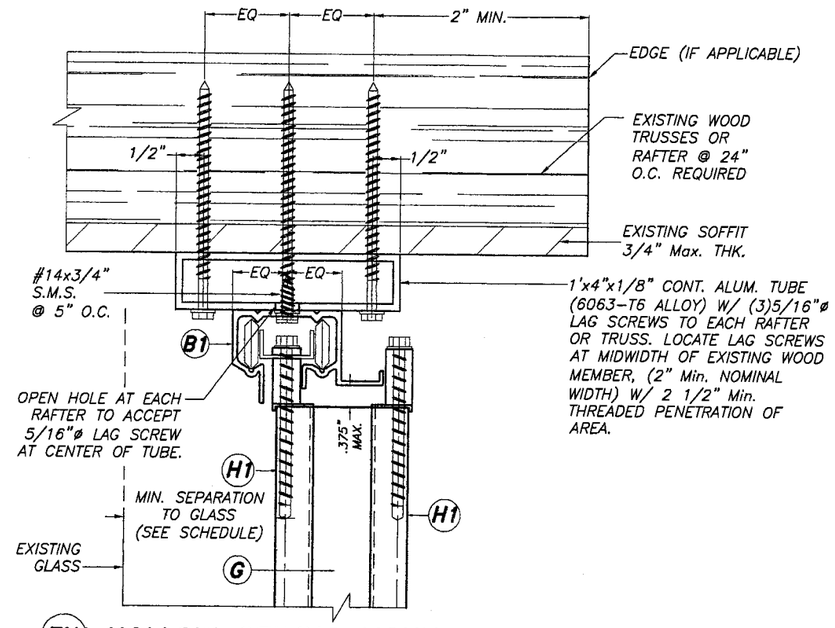

3W HOLLOW CEILING MOUNTING INSTALLATION

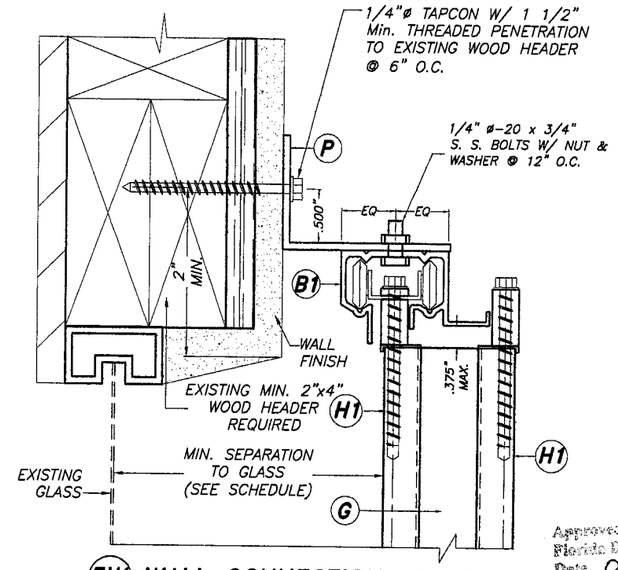

5W WALL CONNECTION AT TOP

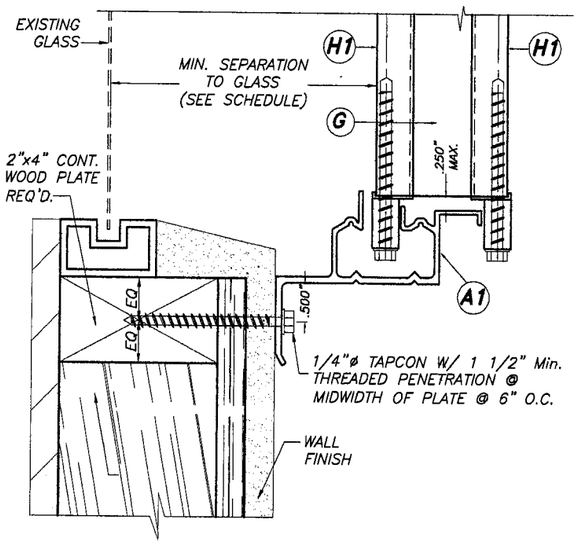

2W WALL CONNECTION AT BOTTOM

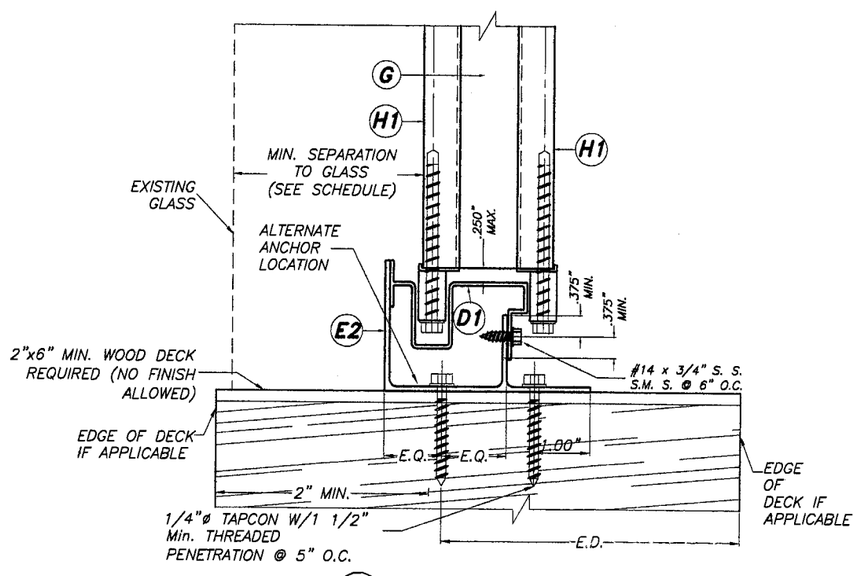

4W FLOOR CONNECTION

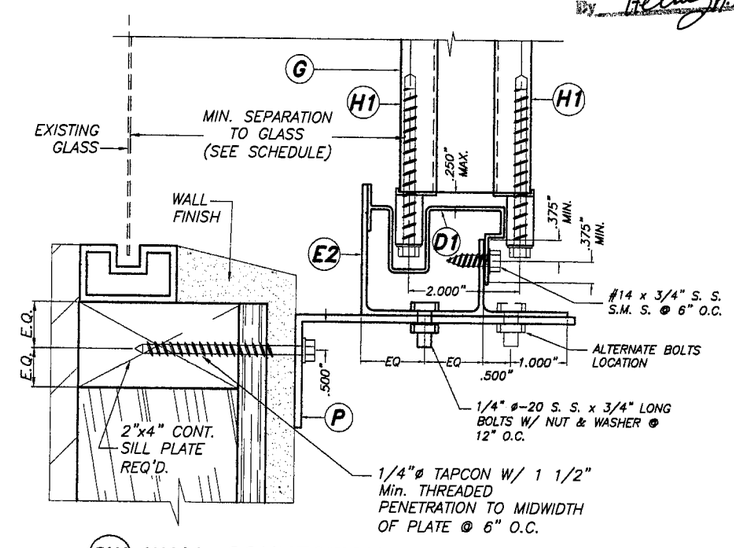

6W WALL CONNECTION AT BOTTOM

Approved as complying with the Florida Building Code
Date 05/18/2006
NOAC 05-1122.08
Miami Dade Product Control Division
By Helmy A. Mohsen

F.B.C. (High Velocity Hurricane Zone)

NOTES:

1. INSTALLATIONS ARE ONLY VALID FOR DESIGN WIND LOADS UP TO +60.0, -72.0 psf AND SHUTTER'S SPAN UP TO 11'-0" PER SCHEDULE ON SHEET 7 OF 8.
2. FOR NEW WOOD FRAME CONSTRUCTION: WOOD MEMBERS TO BE SOUTHERN PINE No. 2, W/ SPECIFIC DENSITY OF 0.55 OR EQUAL.

NOTE:
1-SEE SHEET 3 FOR TYPICAL SHUTTER ASSEMBLY
2-MOUNTING SECTIONS CAN BE COMBINED IN ANY WAY TO SUIT ANY INSTALLATION.

4/18/06

TILTECO INC.
TILLIT TESTING & ENGINEERING COMPANY
6355 N.W. 36th. St., Ste. 305, VIRGINIA GARDENS, Fl. 33166
Phone : (305)871-1530 . Fax : (305)871-1531
EB-0006719
WALTER A. TILLIT Jr. P. E.
FLORIDA Lic. # 44167

HIGH IMPACT 125° ACCORDION SHUTTER SYSTEM

GENERAL IMPACT GLASS AND WINDOWS, CORP.
(CQIPA # 1)
7840 N.W. 64TH STREET
MIAMI, FL. 33166
PH:(305)558-8103, FAX:(305)558-6665

REV. No	DESCRIPTION	DATE	REV. No	DESCRIPTION	DATE
1	GENERAL	4/18/06	3		
2	–	–	4		

DRAWN BY: M.C.V.
9/19/05 DATE
05-293 DRAWING No
SHEET 6 OF 8

MAXIMUM SHUTTER SPAN
"L+" OR "L−" (ft.) *
INSTALLATIONS W/ (L) AND (L1)
125° CENTERMATES, ONE (M) LOCK
& LOCKING RODS (N)

MAXIMUM DESIGN LOAD (p.s.f.) (+ OR −)	CONCRETE & CONCRETE BLOCK INSTALLATIONS — MOUNTING CONDITIONS PER SECTIONS 1 THRU 6	
	L + (ft)	L − (ft)
30 OR LESS	9'−10"	11'−0"
35	9'−6"	11'−0"
40	9'−2"	11'−0"
45	8'−11"	10'−8"
50	8'−8"	10'−4"
55	8'−6"	9'−11"
60	8'−3"	9'−6"
65	8'−1"	9'−2"
70	7'−11"	8'−10"
75	7'−5"	8'−3"
80	6'−11"	7'−9"
85	6'−6"	7'−3"
90	6'−2"	6'−10"
95	5'−10"	6'−6"
100	5'−6"	6'−2"
105	5'−3"	5'−11"
110	5'−0"	5'−7"
115	4'−10"	5'−4"
120	4'−7"	5'−2"
125	−	4'−11"
130	−	4'−9"
135	−	4'−7"
140	−	4'−5"
145	−	4'−3"
150	−	4'−1"
155	−	4'−0"
160	−	3'−10"
165	−	3'−9"
170	−	3−8"

* NOTES:

(1) L+: MAXIMUM ALLOWABLE SPAN FOR A GIVEN POSITIVE DESIGN LOAD.
L−: MAX. ALLOWABLE SPAN FOR A GIVEN NEGATIVE DESIGN LOAD.

(2) PROCEDURE TO DETERMINE MAXIMUM SPAN FOR WALL MOUNTINGS OR FLOOR/CEILING:

GIVEN A POSITIVE DESIGN LOAD, DETERMINE MAXIMUM SPAN "L+" FROM SCHEDULE.
GIVEN A NEGATIVE DESIGN LOAD, DETERMINE MAXIMUM SPAN "L−" FROM SCHEDULE.

FINAL MAXIMUM ALLOWABLE SPAN IS EQUAL TO THE MINIMUM DETERMINED SPAN BETWEEN "L+" AND "L−".

(3) GO TO ANCHOR SCHEDULE WITH FINAL MAXIMUM ALLOWABLE SPAN AND MAXIMUM DESIGN LOAD TO DETERMINE MAXIMUM ANCHOR SPACING.

♦ SEPARATION TO GLASS SCHEDULE

MINIMUM SEPARATION TO GLASS FOR SHUTTERS INSTALLED AT ALL ELEVATIONS OF BUILDING IS 3".

INSTALLATION LEGEND

MOUNTINGS \ SUBSTRATE	CONCRETE & CONCRETE BLOCK (SHEET 4)
WALL MOUNTING	# 1, 2, 5 & 6
FLOOR/CEILING MOUNTING	# 3 & 4

Approved as complying with the Florida Building Code
Date 05/18/2006
NOA# 05-1122.08
Miami Dade Product Control Division
By Helmy A. Mahr

4/18/06

F.B.C. (High Velocity Hurricane Zone)

TILTECO INC.
TILLIT TESTING & ENGINEERING COMPANY
6355 N.W. 36th. St., Ste. 305, VIRGINIA GARDENS, Fl. 33166
Phone : (305)871-1530 . Fax : (305)871-1531
EB-0006719
WALTER A. TILLIT Jr. P. E.
FLORIDA Lic. # 44167

HIGH IMPACT 125° ACCORDION SHUTTER SYSTEM

GENERAL IMPACT GLASS AND WINDOWS, CORP.
(CQIPA # 1)
7840 N.W. 64TH STREET
MIAMI, FL. 33166
PH:(305)558-8103, FAX:(305)558-6665

REV. No	DESCRIPTION	DATE	REV. No	DESCRIPTION	DATE
1	GENERAL	4/18/06	3		
2	−	−	4		

DRAWN BY: M.C.V.
9/19/05 DATE
05-293 DRAWING No
SHEET 7 OF 8

ANCHORS SPACING LEGEND

TAPCON
CALK–IN

MAXIMUM DESIGN PRESSURE RATING (p.s.f.) AND CORRESPONDING MAXIMUM ANCHOR* SPACING (in.) SCHEDULE FOR A GIVEN MAX. SHUTTER SPAN, MAXIMUM DESIGN LOAD AND A CORRESPONDING MOUNTING TYPE FOR CONCRETE INSTALLATIONS

MAXIMUM SPAN (ft)	MOUNTINGS PER SECTIONS 1 THRU 6 (SHEET 4)				
	MAXIMUM DESIGN LOAD (psf)				
	50 OR LESS	>50 TO 90	>90 TO 120	>120 TO 160	>160 TO 170
9'–0" OR LESS	6"	6"	6"	6"	6"
	6" *	6" *	6" *	6" *	6" *
>9'–0" UP TO 11'–0"	6"	–	–	–	–
	6" *	–	–	–	–

* ANCHOR SPACING ONLY VALID FOR INSTALLATIONS AS PER SECTION 4, SHEET 4 OF 8

ANCHORS SPACING LEGEND

TAPCON

MAXIMUM DESIGN PRESSURE RATING (p.s.f.) AND CORRESPONDING MAXIMUM ANCHOR* SPACING (in.) SCHEDULE FOR A GIVEN MAX. SHUTTER SPAN, MAXIMUM DESIGN LOAD AND A CORRESPONDING MOUNTING TYPE FOR CONCRETE BLOCK INSTALLATIONS

MAXIMUM SPAN (ft)	MOUNTINGS PER SECTIONS 1, 2, 5 & 6 (SHEET 4)				
	MAXIMUM DESIGN LOAD (psf)				
	50 OR LESS	>50 TO 90	>90 TO 120	>120 TO 160	>160 TO 170
9'–0" OR LESS	6"	6"	6"	6"	6"
>9'–0" UP TO 11'–0"	6"	–	–	–	–

*NOTES ON ANCHOR REQUIREMENTS: POURED CONCRETE OR CONCRETE BLOCK SUBSTRATES

1. ANCHORS TO WALL SHALL BE AS FOLLOWS:

(A) TO EXISTING POURED CONCRETE: (Min. f'c = 3.350 ksi)
– 1/4"ø TAPCON ANCHORS, AS MANUFACTURED BY ELCO TEXTRON, INC.
– 1/4"ø CALK–IN ANCHORS AS MANUFACTURED BY POWER FASTENERS, INC.

NOTES:

A.1) MINIMUM EMBEDMENT INTO POURED CONCRETE OF TAPCON ANCHORS IS 1 3/4", AND MINIMUM EMBEDMENT INTO POURED CONCRETE OF CALK–IN ANCHORS IS 7/8".

A.2) IN CASE THAT PRECAST STONE, PRECAST CONCRETE PANELS, PAVERS OR ANY VENEER BE FOUND ON THE EXISTING WALL OR FLOOR, ANCHORS SHALL BE LONG ENOUGH TO REACH THE MAIN STRUCTURE BEHIND SAID WALL FINISHES. ANCHORAGE SHALL BE AS INDICATED ON NOTE A.1) ABOVE. FOR INSTALLATIONS ON VINYL SIDING OR EIFS CONSULT THIS ENGINEER.

(B) TO EXISTING ASTM C–90 CONCRETE BLOCK WALL:
– 1/4"ø TAPCON ANCHORS, AS MANUFACTURED BY ELCO TEXTRON, INC.

NOTES:

B.1) MINIMUM EMBEDMENT INTO CONCRETE BLOCK OF TAPCON ANCHORS IS 1 1/4".

B.2) IN CASE THAT PRECAST STONE, PRECAST CONCRETE PANELS, PAVERS OR ANY VENEER BE FOUND ON THE EXISTING WALL OR FLOOR, ANCHORS SHALL BE LONG ENOUGH TO REACH THE MAIN STRUCTURE BEHIND SAID WALL FINISHES. ANCHORAGE SHALL BE AS INDICATED ON NOTE B.1) ABOVE. FOR INSTALLATIONS ON VINYL SIDING OR EIFS CONSULT THIS ENGINEER.

(C) ANCHORS SHALL BE INSTALLED FOLLOWING ALL OF THE RECOMMENDATIONS AND SPECIFICATIONS OF THE ANCHOR'S MANUFACTURER.

(D) SEE SCHEDULE BELOW FOR EDGE DISTANCE (E.D.) VERSUS SPACING RELATIONSHIP FOR ANCHORS.

EDGE DISTANCE VERSUS SPACING FOR ANCHORS

MAXIMUM ANCHOR SPACINGS ARE VALID FOR 3" EDGE DISTANCE FOR 1/4"ø TAPCON AND 1/4"ø CALK–IN. FOR E. D. LESS THAN THE ABOVE MENTIONED, REDUCE ANCHOR SPACING BY MULTIPLYING SPACING SHOWN ON SCHEDULE BY THE FOLLOWING FACTORS. THIS OPERATION IS ONLY ALLOWED IF REDUCED SPACING OBTAINED USING FACTOR IS NOT LESS THAN MINIMUM SPACING INDICATED FOR EACH ANCHOR TYPE.

ACTUAL E. D.	FACTOR	
	1/4"ø TAPCON	1/4 ø CALK–IN
	MIN. SPACING = 3"	MIN. SPACING = 2 1/2"
2 1/2"	0.66	0.50
2"	0.50	–

Approved as complying with the Florida Building Code
Date 05/18/2006
NOA# 05-1122.08
Miami Dade Product Control Division
By Helmy A. Abdelsalam

F.B.C. (High Velocity Hurricane Zone)

4/18/06

TILTECO INC.
TILLIT TESTING & ENGINEERING COMPANY
6355 N.W. 36th. St., Ste. 305, VIRGINIA GARDENS, Fl. 33166
Phone : (305)871–1530 . Fax : (305)871–1531
EB–0006719
WALTER A. TILLIT Jr. P. E.
FLORIDA Lic. # 44167

HIGH IMPACT 125° ACCORDION SHUTTER SYSTEM

GENERAL IMPACT GLASS AND WINDOWS, CORP.
(COIPA # 1)
7840 N.W. 64TH STREET
MIAMI, FL. 33166
PH:(305)558–8103, FAX:(305)558–6665

REV. No	DESCRIPTION	DATE	REV. No	DESCRIPTION	DATE
1	GENERAL	4/18/06	3		
2	–	–	4		

DRAWN BY: M.G.W.
DATE: 9/19/05
DRAWING No: 05–293
SHEET 8 OF 8