MIAMI-DADE

BUILDING CODE COMPLIANCE OFFICE (BCCO)
PRODUCT CONTROL DIVISION

MIAMI-DADE COUNTY, FLORIDA
METRO-DADE FLAGLER BUILDING
140 WEST FLAGLER STREET, SUITE 1603
MIAMI, FLORIDA 33130-1563
(305) 375-2901 FAX (305) 375-2908

NOTICE OF ACCEPTANCE (NOA)

Alpine Overhead Doors, Inc.
8 Hulse Road
East Setauket, NY 11733

Scope. This NOA is being issued under the applicable rules and regulations governing the use of construction materials. The documentation submitted has been reviewed by Miami-Dade County Product Control Division and accepted by the Board of Rules and Appeals (BORA) to be used in Miami Dade County and other areas where allowed by the Authority Having Jurisdiction (AHJ).

This NOA shall not be valid after the expiration date stated below. The Miami-Dade County Product Control Division (In Miami Dade County) and/or the AHJ (in areas other than Miami Dade County) reserve the right to have this product or material tested for quality assurance purposes. If this product or material fails to perform in the accepted manner, the manufacturer will incur the expense of such testing and the AHJ may immediately revoke, modify, or suspend the use of such product or material within their jurisdiction. BORA reserves the right to revoke this acceptance, if it is determined by Miami-Dade County Product Control Division that this product or material fails to meet the requirements of the applicable building code.
This product is approved as described herein, and has been designed to comply with the Florida building Code including the High Velocity Hurricane Zone.

DESCRIPTION: 12' Wide Roll-Up Door

APPROVAL DOCUMENT: Drawing No. ALP2, dated 03/21/96, with last revision on 10/05/05, titled "REDISTORM12", sheets 1 through 3 of 3, prepared by Alpine Overhead Doors, Inc. signed and sealed by F. P. Degiovanni PE, bearing the Miami-Dade County Product Control Revision stamp with the Notice of Acceptance number and expiration date by the Miami-Dade County Product Control Division.

MISSILE IMPACT RATING: Large and Small Missile Impact

LABELING: Each unit shall bear a permanent label with the manufacturer's name or logo, city, state and following statement: "Miami-Dade County Product Control Approved or MDCPCA", unless otherwise noted herein.

RENEWAL of this NOA shall be considered after a renewal application has been filed and there has been no change in the applicable building code negatively affecting the performance of this product.

TERMINATION of this NOA will occur after the expiration date or if there has been a revision or change in the materials, use, and/or manufacture of the product or process. Misuse of this NOA as an endorsement of any product, for sales, advertising or any other purposes shall automatically terminate this NOA. Failure to comply with any section of this NOA shall be cause for termination and removal of NOA.

ADVERTISEMENT: The NOA number preceded by the words Miami-Dade County, Florida, and followed by the expiration date may be displayed in advertising literature. If any portion of the NOA is displayed, then it shall be done in its entirety.

INSPECTION: A copy of this entire NOA shall be provided to the user by the manufacturer or its distributors and shall be available for inspection at the job site at the request of the Building Official.
This NOA **revises NOA # 02-0507.03** and, consists of this page, evidence page as well as approval document mentioned above.
The submitted documentation was reviewed by **Candido F. Font PE.**

06/29/06

PRODUCT CONTROL ACCEPTED

Alpine Overhead Doors, Inc.

NOTICE OF ACCEPTANCE: EVIDENCE PAGE

A. DRAWINGS

1. Drawing No. ALP2, prepared by Alpine Overhead Doors, Inc, titled REDISTORM12 dated 03/21/96, with last revision on 10/05/05, sheets 1 through 3 of 3, signed and sealed by F. P. DeGiovanni, PE.

B. TESTS

1. Test report on Large Missile Impact Test, Cyclic Wind Pressure Test and Uniform Static Air Pressure Test on a " Steel Rolling Garage Door", prepared by Architectural Testing, Inc., report No. ATI-16800, dated 0410/96, signed and sealed by A. N. Reeves, PE.
2. Test report on Large Missile Impact Test, Cyclic Wind Pressure Test on a "Steel; Rolling Garage Door", prepared by Architectural Testing Inc., report No. 01-31478.01, dated 03/05/99, signed and sealed by A. N. Reeves, PE.

C. CALCULATIONS

1. Calculations prepared by Alpine Overhead Doors, Inc., dated 03/29/96, sheets 1 through 4, signed and sealed by F. Costanzo, PE. on 04/02/96.
2. Calculations prepared by Alpine Overhead Doors, Inc., dated 11/07/05, sheets 1 through 5, signed and sealed by F. P. Degiovanni, PE. on 11/22/05.

D. QUALITY ASSURANCE

1. Building Code Compliance Office.

E. STATEMENTS

1. No change letter issued by Alpine Overhead Doors, Inc. on 03/19/99, signed by S. Magro.
2. Protocol compliance statement issued by Architectural Testing, Inc., on 03/09/99, signed and sealed by A. N. Reeves, PE.
3. No change letter issued by Alpine Overhead Doors, Inc. on 04/19/02, signed by S. Magro and P De Giovanni, PE.

F. OTHER

1. Underwriters Laboratories, Inc. report No. R12035 per ASTM E84, of Foam Plastic dated 06/10/91 and signed by A. Barham.
2. Test report of Ignition properties on Plastics Foam, test per ASTM D1929, by U.S. Testing Company, Inc. Report No. 185358, dated 03/15/91 and signed by M.S. Elliot.

06/29/06

Candido F. Font PE
Senior Product Control Examiner
NOA No 05-1129.01
Expiration Date: August 29, 2007
Approval Date: June 29, 2006

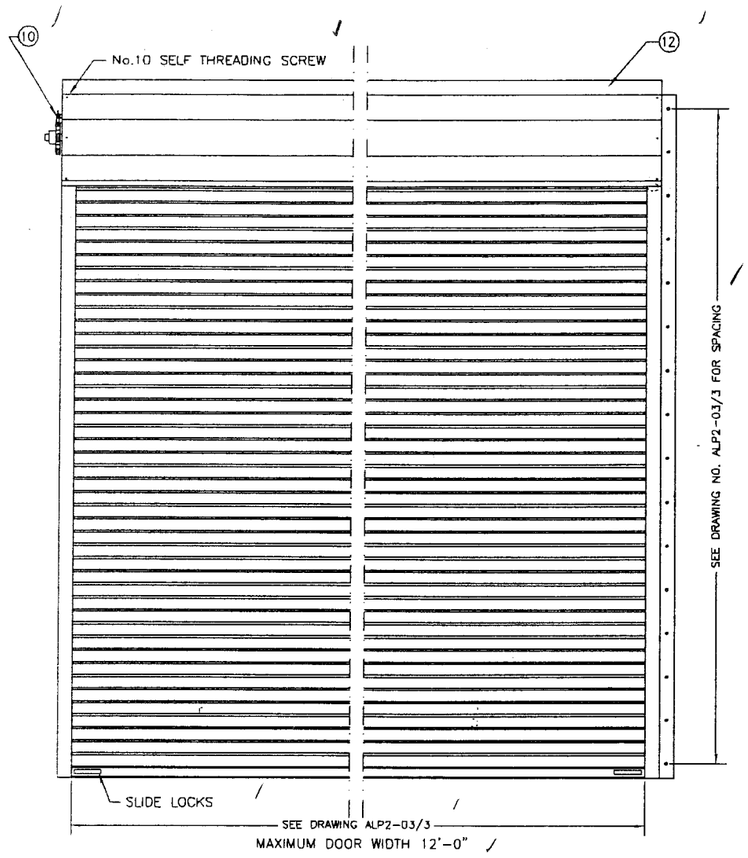

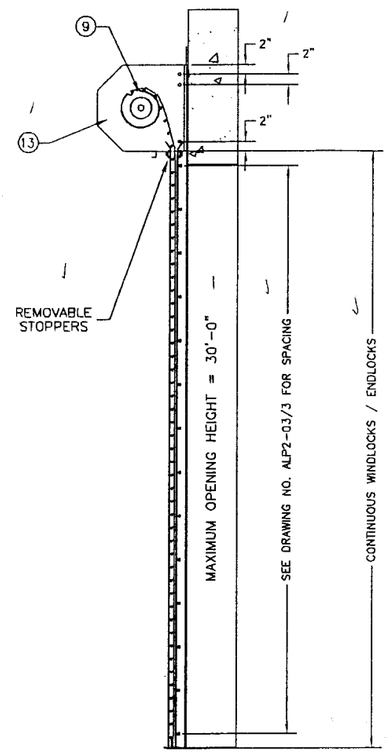

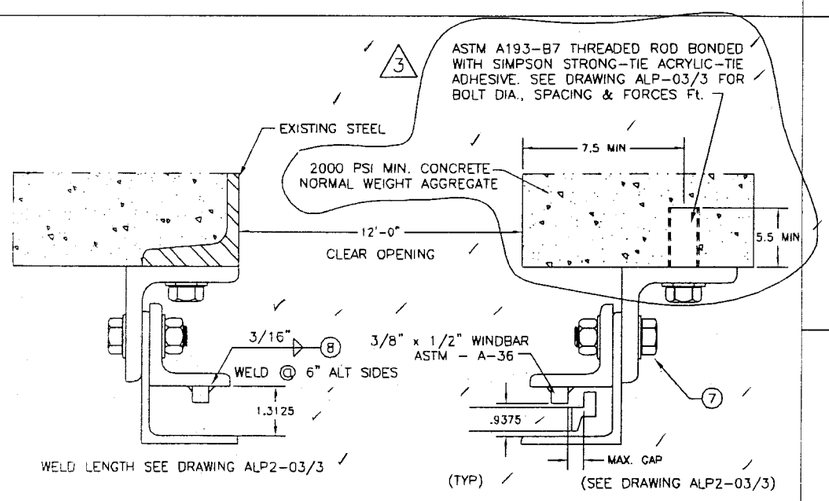

E-MOUNT FOR STEEL
(SEE DRAWING ALP2-03/3)

Z-MOUNT FOR MASONRY
(SEE DRAWING ALP2-03/3)

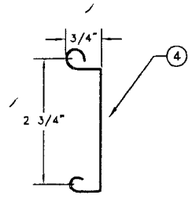

22 GAUGE
FLAT SLAT

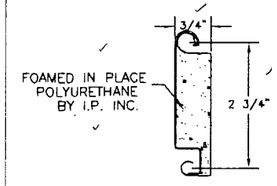

22 GAUGE
INSULATED SLAT

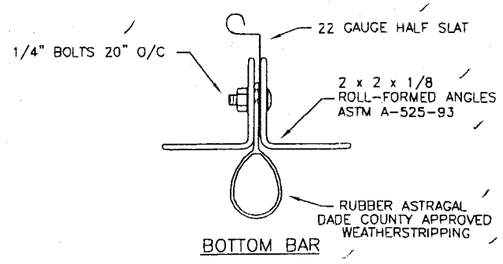

BOTTOM BAR

COMPUTER GENERATED DRAWING

GENERAL NOTES

3 1. THIS DOOR WAS DESIGNED IN ACCORDING TO THE 2004 EDITION OF THE FLORIDA BUILDING CODE.

2. CALCULATIONS ON POSITIVE AND NEGATIVE DESIGN PRESSURE ARE PERFORMED IN ACCORDANCE WITH ASCE 7-88 (MINIMUM DESIGN LOADS FOR BUILDINGS AND OTHER STRUCTURES)

3. THE DETAILS AND SPECIFICATIONS SHOWN WITHIN THESE SET OF DRAWINGS REPRESENT THE PRODUCTS TESTED FOR IMPACT, CYCLIC AND STATIC AIR PRESSURE ACCORDING TO DADE COUNTY PROTOCOLS PA 201, 202, AND 203 AT BASE DESIGN LOADS OF 60 PSF POSITIVE AND NEGATIVE.

4. SLATS TO BE ASTM A-446 GRADE C WITH G-90 GALVANIZING OR STAINLESS STEEL WITH MINIMUM Fy = 40 KSI

5. ALL STEEL ANGLES AND WINDBAR TO BE SHOP PRIMED.

6. WINDLOCKS TO BE DUCTILE IRON WITH MINIMUM Fy = 42 KSI

3 7. ALL ASSEMBLY BOLTS TO BE ASTM - A 449 / SAE GRADE 5 OR STAINLESS STEEL-304. THREADS ARE INCLUDED IN THE SHEAR PLANE.

8. ALL WELDING TO BE IN ACCORDANCE WITH AWS LATEST EDITION AND SOUTH FLORIDA BUILDING CODE. WELDING TO BE DONE BY CERTIFIED WELDERS USING 70XX ELECTRODES

3 9. SPRING COUNTERBALANCE TO BE HOUSED IN A STEEL PIPE OF DIAMETER AND WALL THICKNESS TO RESTRICT MAXIMUM DEFLECTION OF 0.03" PER FOOT OF DOOR WIDTH. ROLL-UP MECHANISM NOT PART OF THIS APPROVAL MUST BE CERTIFIED BT AN INDEPENDENT TESTING AGENCY.

10. CHARGE WHEEL FOR APPLYING SPRING TORQUE FOR COUNTERBALANCE ASSEMBLY AND FUTURE ADJUSTMENTS

11. RIVETS FOR WINDLOCKS/ENDLOCKS ARE TO BE SEMI-TUBULAR 0.246/0.252 DIA. 0.437 MUSHROOM HEAD x 7/16", ASTM A-31.

12. HOOD IS TO BE 24 GAUGE ASTM - 525 WITH G-90 GALVANIZING

13. BRACKETS ARE STEEL PLATES NOT LESS THAN 1/4" THICK. BALL BEARING AT ROTATING SUPPORT POINTS. BOLTED TO MOUNTING ANGLE, SUPPORTS COUNTERBALANCE ASSEMBLY AND FORMS END ENCLOSURES. SIZED TO CONFORM SMOOTH OPERATION.

Design Pressure Rating
+/- 60 PSF

PRODUCT REVISED
In compliance with the Florida Building Code
Acceptance No. 05-1129.01
Expiration Date 08/29/07
By
Miami-Dade Product Control Division

© COPYRIGHT 1996

DATE	NO.	REVISION RECORD	DRAWN	CHECK
10/05	3	REVISED TO CONFORM TO 2004 FLB CODE	S.A.M.	
6/14/02	2	ADDED CLARIFICATION NOTES	S.A.M.	
7/18/96	1	ADDED NOTES TO GUIDE DETAIL	S.A.M.	

8 HULSE ROAD, EAST SETAUKET, N.Y. 11733
TEL: (631)473-9300 FAX: (631)642-0800
© COPYRIGHT 1996

APPLICATION# 02-0507.03

REDISTORM12

F.P. DEGIOVANNI P.E.
41 FLANDERS RD
MONTAUK, NY 11379
FL LICENSE NO. 55071

5/15/2006
DATE

DRAWN BY S.A.M.
APPR. BY
DATE 3-21-96
DRAWING# ALP2-01/3
REV. 3

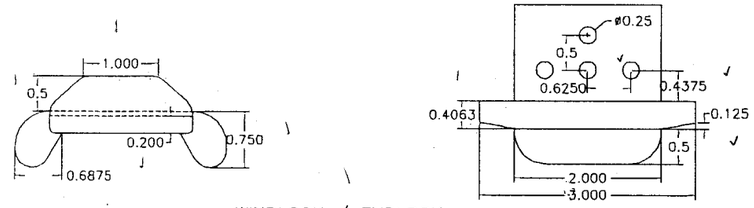

WINDLOCK / ENDLOCK

WINDLOCK

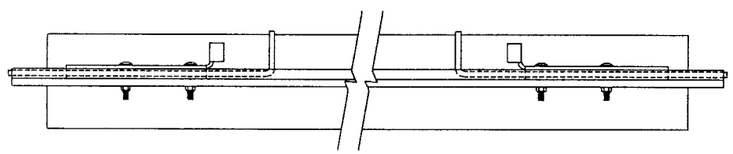

UNLOCKED POSITION

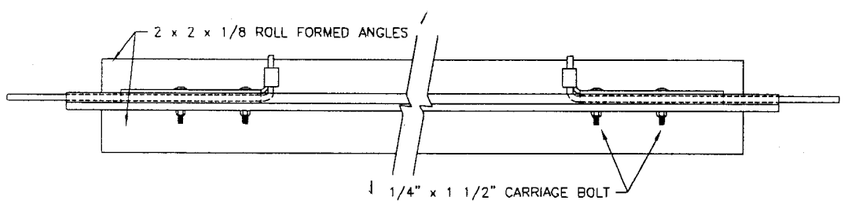

LOCKED POSITION

SLIDE LOCK

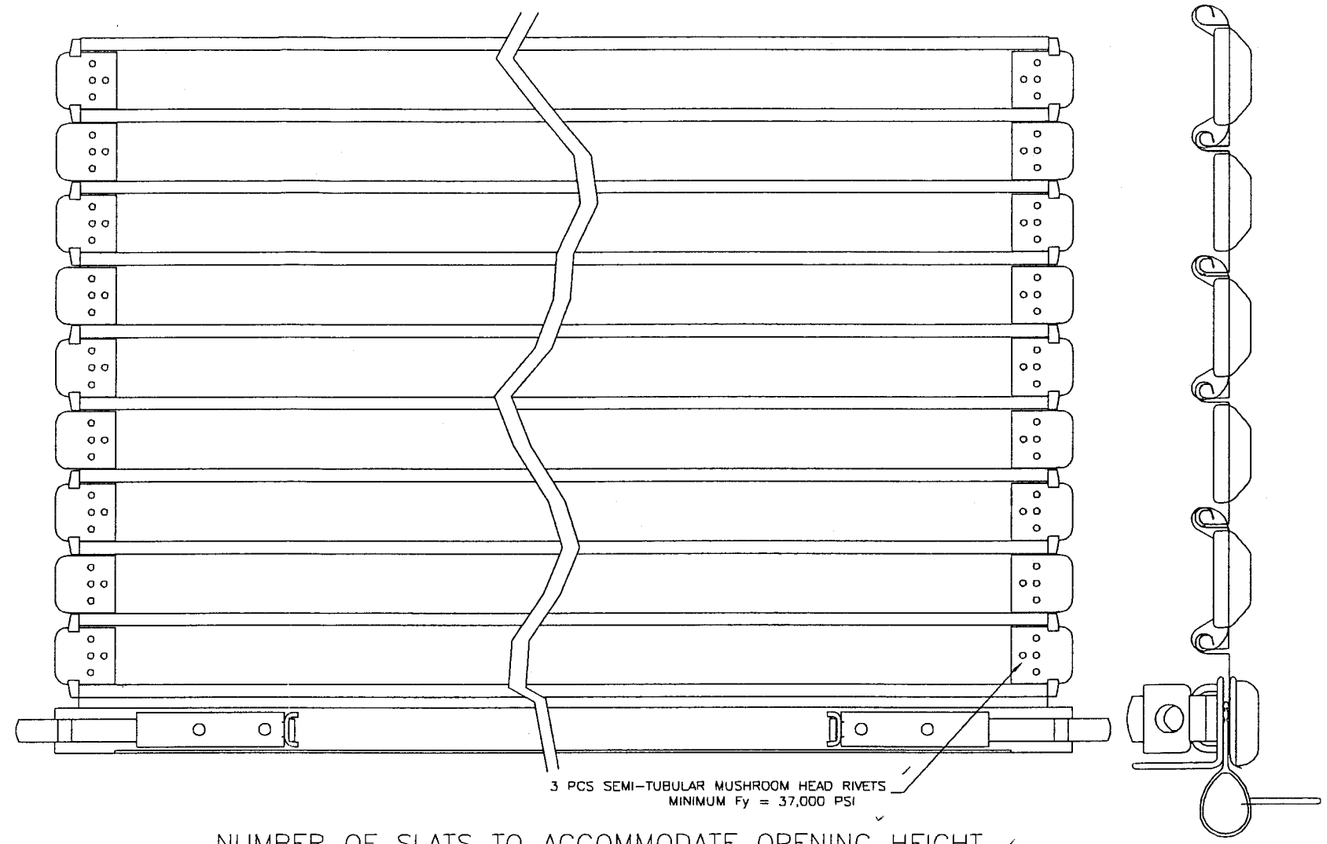

NUMBER OF SLATS TO ACCOMMODATE OPENING HEIGHT

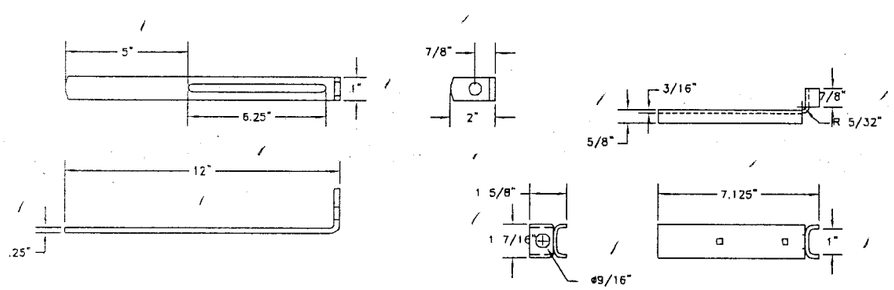

COMPUTER GENERATED DRAWING

PRODUCT REVIEWED
Accepted with the Florida Product Control Acceptance Number 05-1129.01
Expiration Date 06/29/07
By
Miami Dade Product Control Division

© COPYRIGHT 1996

DATE	NO.	REVISION RECORD	DRAWN	CHECK

Alpine®
OVERHEAD DOORS, INC.
8 HULSE ROAD, EAST SETAUKET, N.Y. 11733
TEL: (631)473-9300 FAX: (631)642-0800

© COPYRIGHT 1996

APPLICATION# 02-0507.03

REDISTORM12

F.P. DEGIOVANNI P.E.
41 FLANDERS RD
MONTAUK, NY 11379
FL LICENSE NO. 55071

Felice P. DeGiovanni

DATE 5/15/2006

DRAWN BY	S.A.M.
APPR. BY	
DATE	3-21-96
DRAWING# ALP2-02/3	REV. 0

1. THE FOLLOWING CALCULATIONS ARE BASED ON ACTUAL TESTING RESULTS ON THE SLAT DEFLECTION CURVE ASSUMING THE SHAPE OF A CATENARY AS SOON AS THE WINDLOCKS ENGAGE THE GUIDES. THE WINDLOCKS LIMIT THE SLAT DEFLECTION AND BENDING STRESS AND ARE DESIGNED TO ENGAGE THE GUIDES PRIOR TO THE SLATS ATTAINING MAXIMUM ALLOWABLE DEFLECTIONS AND BENDING STRESS WITHOUT RESTRAINTS.
2. IT SHALL BE THE RESPONSIBILITY OF THE CONTRACTOR / OWNER TO VERIFY THAT THE STRUCTURE IS DESIGNED TO SUPPORT FORCES Fx AND Fy AT BOTH JAMBS.
3. BOLTS TO BE AS PER ASTM 449 EXCEPT FOR MOUNTING TO CONCRETE JAMBS WHICH SHALL BE ASTM A193-B7 THREADED ROD WITH SIMPSON STRONG-TIE ACRYLIC-TIE ADHESIVE ANCHOR SYSTEM. SPECIAL INSPECTION REQUIRED FOR CONCRETE ANCHOR SYSTEMS. (3)

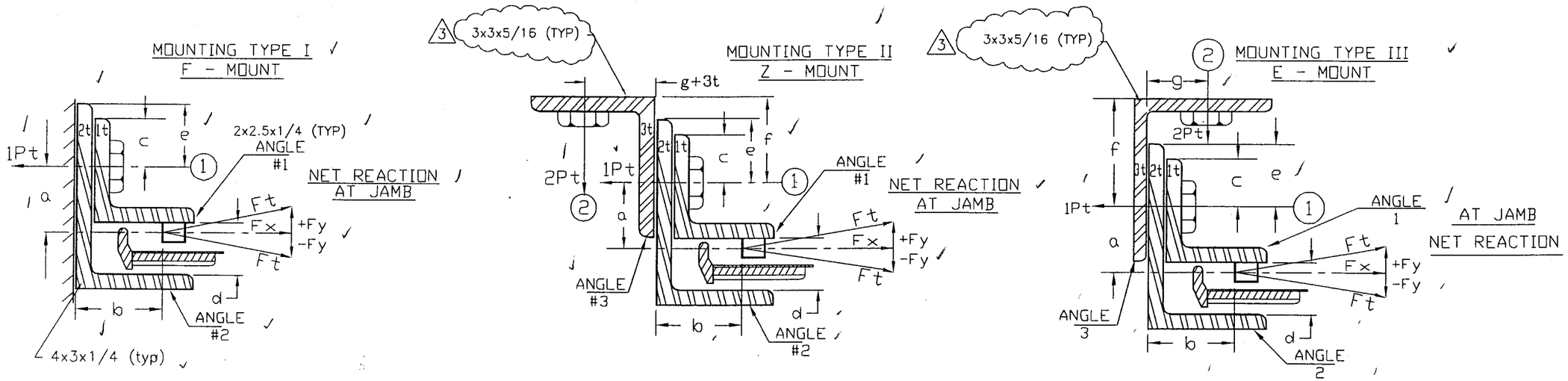

STEEL ANGLES TO BE ASTM A-36 DESIGNATION (3)

F,E & Z TYPE FOR MOUNTING TO STEEL JAMBS SUTABLE TO ACCEPT FORCES FX, FY

TYPE MOUNT	DOOR WIDTH	SLAT THK.	MOUNTING DIMENSIONS (SEE MOUNTING CONDITIONS)							MAX. GAP	D = BOLT DIA., S = SPACING(IN) Pt=BOLT TENSION FORCE, Pv=BOLT SHEAR FORCE								DEFL. IN.	W'BAR THK.	RIVETS NO/DIA.	WELD LEN.	NET REACT FORCE /FT	
			a	b	c	d	e	f	g		1D	1S	1Pt	1Pv	2D	2S	2Pt	2Pv					Fx	Fy
F	12'-0"	.030"	1.375	1.4375	0.875	1.375	0.875	1.25	N/A	0.25	.5	14	6658	341	N/A	N/A	N/A	N/A	5.33	.5x.375	3/.25	.75	2065	293
Z	12'-0"	.030"	1.375	1.4375	0.875	1.375	0.875	1.5	2.000	0.25	.5	14	6658	341	.5	12	2526	2065	5.33	.5x.375	3/.25	.75	2065	293
E	12'-0"	.030"	1.375	1.4375	0.875	1.375	0.875	1.25	1.375	0.25	.5	14	6658	341	.5	10	4002	1721	5.33	.5x.375	3/.25	.75	2065	293
Zc TYPE FOR MOUNTING TO NORMAL WEIGHT CONCRETE JAMBS. fc = 2000psi MIN.																								
Zc	12'-0"	.030"	1.375	1.4375	0.875	1.375	0.875	1.5	2.000	0.25	.5	14	6658	341	.625	12	2526	2065	5.33	.5x.375	3/.25	.75	2065	293

NO.	DATE	REVISION RECORD	DRAWN	CHECK
3	10/05	REVISED TO CONFORM TO 2004 FLB	S.A.M.	
2	6/14/02	ADDED CLARIFICATION NOTES	S.A.M.	
1	7/18/98	REWORDED MOUNTING TYPES MORE SPECIFIC	S.A.M.	

ALPINE®
8 HULSE ROAD, EAST SETAUKET, N.Y. 11733
TEL: (631)473-9300 FAX: (631)642-0800

© COPYRIGHT 1996

APPLICATION# 02-0507.03

REDISTORM12

F.P. DEGIOVANNI P.E.
41 FLANDERS RD
MONTAUK, NY 11379
FL LICENSE NO. 55071

5/15/2006
DATE

DRAWN BY S.A.M.
APPR. BY
DATE 3-21-96
DRAWING# ALP2-03/3
REV. 3

Product Approval Accepted, Date 05-12-2007, Expiration 08/29/07
By Miami-Dade County Building Code Compliance Office, Product Control Division

COMPUTER GENERATED DRAWING

© COPYRIGHT 1996