MIAMI-DADE COUNTY

BUILDING CODE COMPLIANCE OFFICE (BCCO)
PRODUCT CONTROL DIVISION

MIAMI-DADE COUNTY, FLORIDA
METRO-DADE FLAGLER BUILDING
140 WEST FLAGLER STREET, SUITE 1603
MIAMI, FLORIDA 33130-1563
(305) 375-2901 FAX (305) 375-2908
www.buildingcodeonline.com

# NOTICE OF ACCEPTANCE (NOA)

**Pino's Window Corporation**
**6860 NW 75 St**
**Medley, FL 33166**

**SCOPE:**

This NOA is being issued under the applicable rules and regulations governing the use of construction materials. The documentation submitted has been reviewed by Miami-Dade County Product Control Division and accepted by the Board of Rules and Appeals (BORA) to be used in Miami Dade County and other areas where allowed by the Authority Having Jurisdiction (AHJ).

This NOA shall not be valid after the expiration date stated below. The Miami-Dade County Product Control Division (In Miami Dade County) and/or the AHJ (in areas other than Miami Dade County) reserve the right to have this product or material tested for quality assurance purposes. If this product or material fails to perform in the accepted manner, the manufacturer will incur the expense of such testing and the AHJ may immediately revoke, modify, or suspend the use of such product or material within their jurisdiction. BORA reserves the right to revoke this acceptance, if it is determined by Miami-Dade County Product Control Division that this product or material fails to meet the requirements of the applicable building code.

This product is approved as described herein, and has been designed to comply with the Florida Building Code, including the High Velocity Hurricane Zone.

**DESCRIPTION: Series 300 Aluminum Horizontal Sliding Window**

**APPROVAL DOCUMENT:** Drawing No. **W00-47**, titled "Series 300 Aluminum Horizontal Sliding Window" Sheets 1 through 6 of 6, dated 10/27/00 with last revision **"B"** on 03/23/06, prepared by Al-Farooq Corporation, signed and sealed by Humayoun Farooq, P.E., bearing the Miami-Dade County Product Control Renewal stamp with the Notice of Acceptance number and expiration date by the Miami-Dade County Product Control Division.

**MISSILE IMPACT RATING: None**

**LABELING:** Each unit shall bear a permanent label with the manufacturer's name or logo, city, state and following statement: "Miami-Dade County Product Control Approved", unless otherwise noted herein.

**RENEWAL** of this NOA shall be considered after a renewal application has been filed and there has been no change in the applicable building code negatively affecting the performance of this product.

**TERMINATION** of this NOA will occur after the expiration date or if there has been a revision or change in the materials, use, and/or manufacture of the product or process. Misuse of this NOA as an endorsement of any product, for sales, advertising or any other purposes shall automatically terminate this NOA. Failure to comply with any section of this NOA shall be cause for termination and removal of NOA.

**ADVERTISEMENT:** The NOA number preceded by the words Miami-Dade County, Florida, and followed by the expiration date may be displayed in advertising literature. If any portion of the NOA is displayed, then it shall be done in its entirety.

**INSPECTION:** A copy of this entire NOA shall be provided to the user by the manufacturer or its distributors and shall be available for inspection at the job site at the request of the Building Official.

This NOA **revises and renews NOA# 00-1107.02** consists of this page 1 and evidence pages E-1, and E-2, as well as approval document mentioned above.

The submitted documentation was reviewed by **Jaime D. Gascon, P.E.**

PRODUCT CONTROL ACCEPTED

J. Gascon
4/12/06

**Pino's Windows Corporation**

## NOTICE OF ACCEPTANCE: EVIDENCE SUBMITTED

**A. DRAWINGS**

1. Manufacturer's die drawings and sections.
2. Drawing No. **W00-47**, titled "Series 300 Aluminum Horizontal Sliding Window," dated 10/27/00 with last revision **"B"** on 03/23/06, Sheets 1 through 6 of 6, prepared by Al-Farooq Corporation, signed and sealed by Humayoun Farooq, P.E.

**B. TESTS**

1. Test report on: 1) Air Infiltration Test, per FBC, TAS 202-94
   2) Uniform Static Air Pressure Test, Loading per FBC, TAS 202-94
   3) Water Resistance Test, per FBC, TAS 202-94
   4) Forced Entry Test, per FBC, TAS 202-94

   along with marked-up drawings and installation diagram of a three OXO specimens of aluminum horizontal sliding windows, prepared by Fenestration Testing Laboratory, Inc., Test Report No. **FTL-2812**, dated 10/16/00, signed and sealed by Aldo Pablo Gonzalez, P.E.
   ***"Submitted under NOA# 00-1107.02"***
2. Test report on: 1) Air Infiltration Test, per FBC, TAS 202-94
   2) Uniform Static Air Pressure Test, Loading per FBC, TAS 202-94
   3) Water Resistance Test, per FBC, TAS 202-94
   4) Forced Entry Test, per FBC, TAS 202-94

   along with marked-up drawings and installation diagram of a one XO specimen of aluminum horizontal sliding window (w/DSB glass), prepared by Fenestration Testing Laboratory, Inc., Test Report No. **FTL-2733**, dated 09/15/00, signed and sealed by Aldo Pablo Gonzalez, P.E.
   ***"Submitted under NOA# 00-1107.02"***
3. Test report on: 1) Air Infiltration Test, per FBC, TAS 202-94
   2) Uniform Static Air Pressure Test, Loading per FBC, TAS 202-94
   3) Water Resistance Test, per FBC, TAS 202-94
   4) Forced Entry Test, per FBC, TAS 202-94

   along with marked-up drawings and installation diagram of a one XO specimen of aluminum horizontal sliding window (w/ 3/16" glass), prepared by Fenestration Testing Laboratory, Inc., Test Report No. **FTL-2750**, dated 10/4/00, signed and sealed by Aldo Pablo Gonzalez, P.E.
   ***"Submitted under NOA# 00-1107.02"***

**C. CALCULATIONS**

1. Revised Anchor Calculations and structural analysis, complying with FBC-2004, prepared by Al-Farooq Corporation, dated 12/13/05, signed and sealed by Humayoun Farooq, P.E.
   **Complies with ASTM E 1300-02**

**Jaime D. Gascon, P,E.**
**Chief, Product Control Division**
**NOA No 05-1222.04**
**Expiration Date: January 04, 2011**
**Approval Date: April 20, 2006**

## NOTICE OF ACCEPTANCE: EVIDENCE SUBMITTED

**D. QUALITY ASSURANCE**

**1.** Miami Dade Building Code Compliance Office (BCCO).

**E. MATERIAL CERTIFICATIONS**

**1.** None

**F. STATEMENTS**

**1.** Statement letter of conformance, dated 11/7/00, signed and sealed by Humayoun Farooq, P.E.
***"Submitted under NOA# 00-1107.02"***

**2.** Statement letter of no financial interest, dated 11/7/00, signed and sealed by Humayoun Farooq, P.E.
***"Submitted under NOA# 00-1107.02"***

**G. OTHER**

**1.** Notice of Acceptance **No 00-1107.02,** issued to Pino's Windows Corporation, for Aluminum Horizontal Sliding Window, dated 01/04/01 and expiring on 01/04/06.

**Jaime D. Gascon, P,E.**
**Chief, Product Control Division**
**NOA No 05-1222.04**
**Expiration Date: January 04, 2011**
**Approval Date: April 20, 2006**

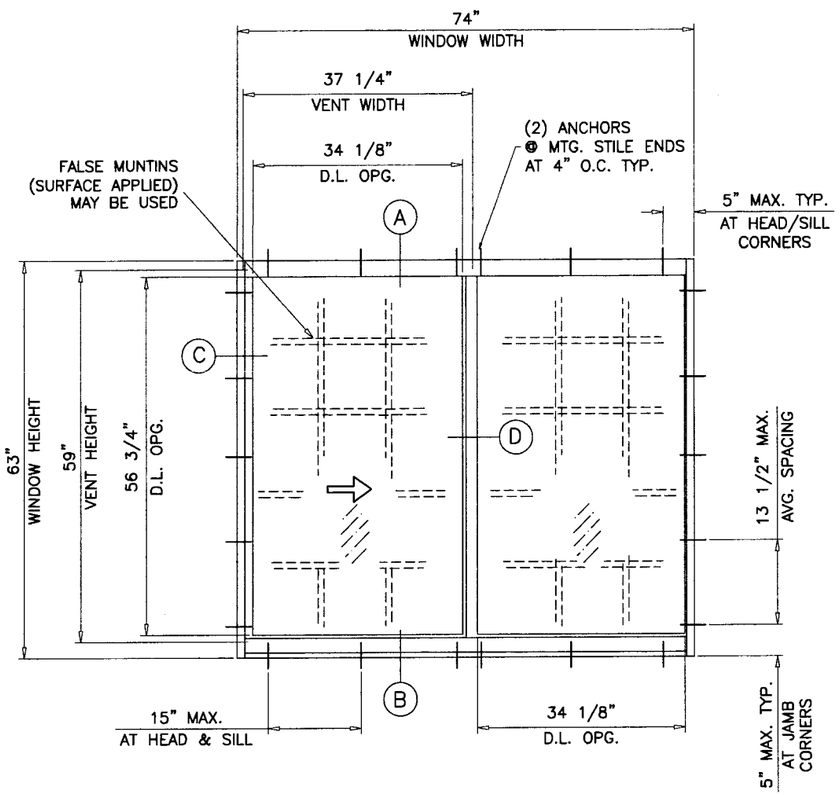


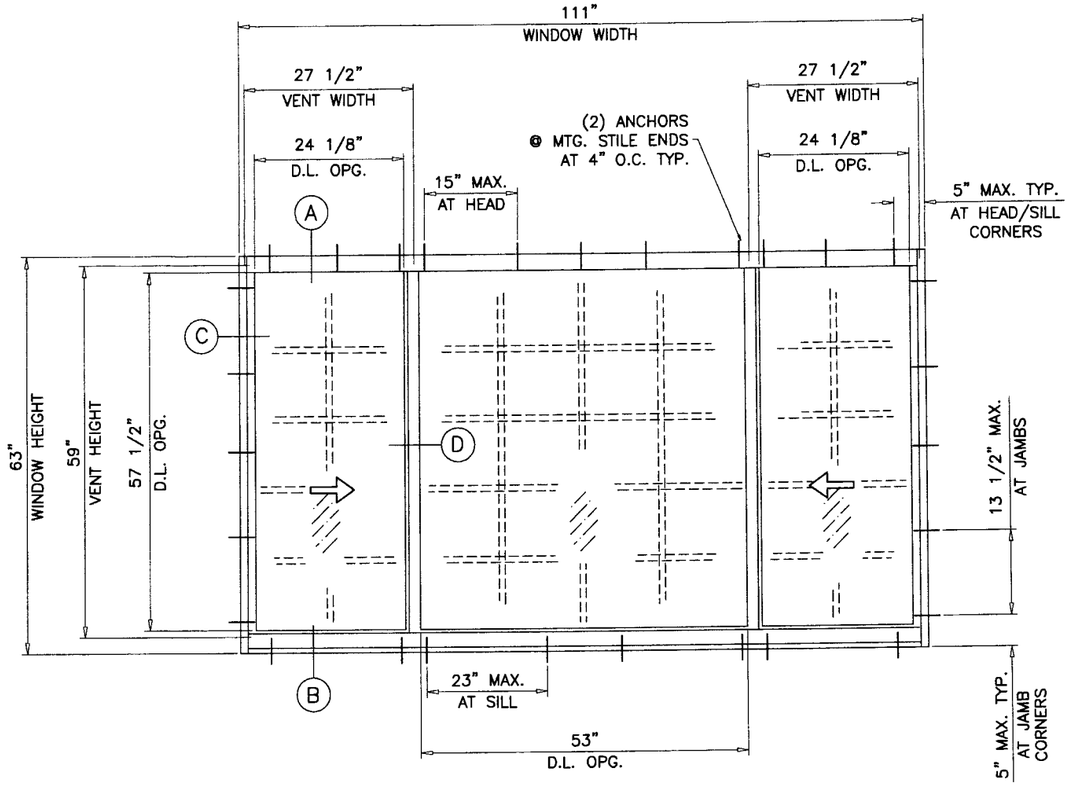


TYPICAL ELEVATION

TESTED UNITS

## SERIES-300 ALUM HORIZ. SLIDING WINDOW

DESIGN LOAD RATINGS FOR THESE WINDOWS TO BE AS PER CHARTS SHOWN ON SHEET 2.

---

APPROVAL APPLIES TO SINGLE UNITS OR SIDE BY SIDE COMBINATIONS OF H.R./H.R. OR HORIZ. ROLLING WITH OTHER MIAMI-DADE COUNTY APPR'D WINDOWS USING MIAMI-DADE COUNTY APPROVED MULLIONS IN BETWEEN.
LOWER DESIGN PRESSURE FROM WINDOWS OR MULLION APPROVAL WILL APPLY TO ENTIRE SYSTEM.

---

THIS PRODUCT HAS BEEN DESIGNED AND TESTED TO COMPLY WITH THE REQUIREMENTS OF THE 2004 FLORIDA BUILDING CODE EDITION (REVISED 2005) INCLUDING HIGH VELOCITY HURRICANE ZONE (HVHZ).

WOOD BUCKS BY OTHERS, MUST BE ANCHORED PROPERLY TO TRANSFER LOADS TO THE STRUCTURE.

ANCHORS SHALL BE AS LISTED, SPACED AS SHOWN ON DETAILS, ANCHORS EMBEDMENT TO BASE MATERIAL SHALL BE BEYOND WALL DRESSING OR STUCCO.

ANCHORING OR LOADING CONDITIONS NOT SHOWN IN THESE DETAILS ARE NOT PART OF THIS APPROVAL.

A LOAD DURATION INCREASE IN ALLOWABLE STRESS IS USED IN DESIGN OF WOOD ANCHORS ONLY.

ALL STEEL IN CONTACT WITH ALUMINUM TO BE PAINTED OR PLATED.

INSTALLATION OF THIS PRODUCT IN THE HVHZ AREA REQUIRES THE USE OF APPROVED SHUTTERS OR EXTERNAL PROTECTION DEVICES COMPLYING WITH HVHZ REQUIREMENTS.

MONOLITHIC GLASS
NON IMPACT

Engr: DR. HUMAYOUN FAROOQ
STRUCTURES
FLA. PE # 16557
C.A.N. 3538

MAR 2 4 2006

Approved as complying with the Florida Building Code
Date APRIL 20, 2006
NOA# 05-1222.04
Miami-Dade Product Control Division
By


AL-FAROOQ CORPORATION
ENGINEERS, PLANNERS & PRODUCT DESIGN
1235 SW 87 AVE
MIAMI, FLORIDA 33174
TEL. (305) 264-8100 FAX. (305) 262-6978


COMP-ANL\WOO-47PW

SERIES-300 ALUM HORIZ. SLIDING WINDOW


PINO WINDOWS CORPORATION
6860 N.W. 75TH STREET
MEDLEY, FL. 33166
TEL. (305) 888-9946 FAX (305) 888-8079


revisions:

| no | date | by | description |
|---|---|---|---|
| A | 12.14.05 | | UPDATED FOR 2004 FBC |
| B | 3.23.06 | | HVHZ NOTE ADDED |

date: 10-27-00
scale: 1/2"=1'-0"
dr. by: HAMID
chk. by:

drawing no. WOO-47

## DESIGN LOAD CAPACITY – PSF (XO OR OX SIZES)

| WINDOW DIMS. | | A | STD. FIX. MTG. RAIL | | H.D. FIX. MTG. RAIL | | | |
|---|---|---|---|---|---|---|---|---|
| | | | 1/8" ANN. GLASS | | 3/16" ANN. GLASS | | 1/4" ANN. GLASS | |
| WIDTH | HEIGHT | | EXT.(+) | INT.(–) | EXT.(+) | INT.(–) | EXT.(+) | INT.(–) |
| 24" | 24" (2) | 4 | 65.0 | 78.4 | 65.0 | 125.0 | 65.0 | 167.0 |
| 36" | | 4 | 65.0 | 78.4 | 65.0 | 125.0 | 65.0 | 167.0 |
| 48" | | 6 | 65.0 | 78.4 | 65.0 | 125.0 | 65.0 | 167.0 |
| 60" | | 6 | 65.0 | 78.4 | 65.0 | 125.0 | 65.0 | 150.0 |
| 72" | | 6 | 65.0 | 70.0 | 65.0 | 120.0 | 65.0 | 120.0 |
| 24" | 36" (3) | 4 | 65.0 | 78.4 | 65.0 | 125.0 | 65.0 | 167.0 |
| 36" | | 4 | 65.0 | 78.4 | 65.0 | 125.0 | 65.0 | 142.2 |
| 48" | | 6 | 65.0 | 73.6 | 65.0 | 125.0 | 65.0 | 142.2 |
| 60" | | 6 | 63.9 | 63.9 | 65.0 | 108.5 | 65.0 | 112.9 |
| 72" | | 6 | 54.5 | 54.5 | 65.0 | 88.9 | 65.0 | 88.9 |
| 24" | 48" (4) | 4 | 65.0 | 78.4 | 65.0 | 125.0 | 65.0 | 167.0 |
| 36" | | 4 | 61.0 | 61.0 | 65.0 | 104.4 | 65.0 | 112.3 |
| 48" | | 6 | 46.4 | 46.4 | 65.0 | 76.3 | 65.0 | 101.9 |
| 60" | | 6 | – | – | 65.0 | 67.8 | 65.0 | 87.3 |
| 72" | | 6 | – | – | 63.8 | 63.8 | 65.0 | 72.7 |
| 24" | 60" (5) | – | – | – | – | – | – | – |
| 36" | | 4 | 39.2 | 39.2 | 61.3 | 61.3 | 65.0 | 77.7 |
| 48" | | 6 | – | – | 46.9 | 46.9 | 61.8 | 61.8 |
| 60" | | 6 | – | – | 41.4 | 41.4 | 53.2 | 53.2 |
| 72" | | 6 | – | – | 41.2 | 41.2 | 50.7 | 50.7 |
| 19–1/8" | 26" (2) | 4 | 65.0 | 78.4 | 65.0 | 125.0 | 65.0 | 167.0 |
| 26–1/2" | | 4 | 65.0 | 78.4 | 65.0 | 125.0 | 65.0 | 167.0 |
| 37" | | 4 | 65.0 | 78.4 | 65.0 | 125.0 | 65.0 | 167.0 |
| 53–1/8" | | 6 | 65.0 | 78.4 | 65.0 | 125.0 | 65.0 | 165.6 |
| 74" | | 6 | 64.9 | 64.9 | 65.0 | 109.0 | 65.0 | 109.0 |
| 19–1/8" | 38–3/8" (3) | 4 | 65.0 | 78.4 | 65.0 | 125.0 | 65.0 | 167.0 |
| 26–1/2" | | 4 | 65.0 | 78.4 | 65.0 | 125.0 | 65.0 | 167.0 |
| 37" | | 4 | 65.0 | 76.9 | 65.0 | 125.0 | 65.0 | 130.8 |
| 53–1/8" | | 6 | 64.4 | 64.4 | 65.0 | 110.3 | 65.0 | 125.9 |
| 74" | | 6 | – | – | 65.0 | 82.1 | 65.0 | 82.1 |
| 19–1/8" | 50–5/8" (4) | – | – | – | – | – | – | – |
| 26–1/2" | | 4 | 65.0 | 78.4 | 65.0 | 125.0 | 65.0 | 151.9 |
| 37" | | 4 | 52.6 | 52.6 | 65.0 | 89.8 | 65.0 | 104.0 |
| 53–1/8" | | 6 | 40.1 | 40.1 | 63.7 | 63.7 | 65.0 | 84.0 |
| 74" | | 6 | – | – | 57.6 | 57.6 | 65.0 | 67.6 |
| 19–1/8" | 63" (5) | – | – | – | – | – | – | – |
| 26–1/2" | | 4 | 45.4 | 45.4 | 64.4 | 64.4 | 65.0 | 80.5 |
| 37" | | 4 | 33.6 | 33.6 | 52.9 | 52.9 | 65.0 | 67.0 |
| 53–1/8" | | 6 | – | – | 39.0 | 39.0 | 50.7 | 50.7 |
| 74" | | 6 | – | – | 36.8 | 36.8 | 44.9 | 44.9 |

A = NO. OF ANCHORS PER HEAD & SILL
( ) = NO. OF ANCHORS PER JAMB

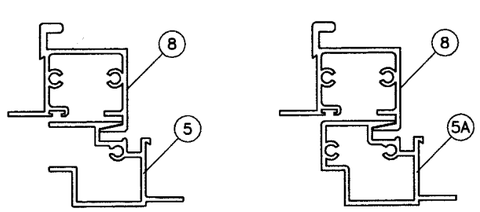


STD. FIX. MTG. RAIL  H.D. FIX. MTG. RAIL

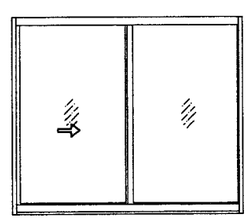

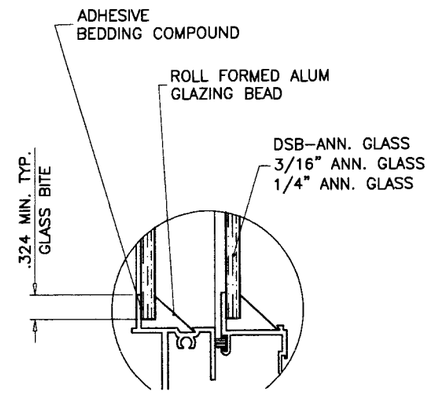


GLAZING DETAIL

ALL EXTERIOR(+) LOADS SHOWN ON THIS SHEET ARE FOR WINDOWS WITH HI–RISE SILL.
FOR STD. SILL LIMIT EXTERIOR(+) LOADS TO 53.3 PSF SEE SCT. 'B' ON SHEET 3.

NOTE:
GLASS CAPACITIES ON THIS SHEET ARE BASED ON ASTM E1300–02 (3 SEC. GUSTS) WITH REDUCTIONS FOR FLEXIBLE SUPPORTS TO COMPLY WITH SECTION 2403.2 OF FBC 2004 EDITION.

## DESIGN LOAD CAPACITY – PSF (XOX SIZES)

| WINDOW DIMS. | | A | H.D. FIX. MTG. RAIL | | | |
|---|---|---|---|---|---|---|
| | | | 3/16" ANN. GLASS | | 1/4" ANN. GLASS | |
| WIDTH | HEIGHT | | EXT.(+) | INT.(–) | EXT.(+) | INT.(–) |
| 72" | 24" (2) | 8/7 | 62.0 | 125.0 | 62.0 | 158.0 |
| 84" | | 8/8 | 62.0 | 123.6 | 62.0 | 133.0 |
| 96" | | 10/8 | 62.0 | 107.8 | 62.0 | 142.9 |
| 108" | | 11/8 | 62.0 | 98.2 | 62.0 | 137.5 |
| 111" | | 11/8 | 62.0 | 96.5 | 62.0 | 133.3 |
| 72" | 36" (3) | 8/7 | 62.0 | 94.3 | 62.0 | 109.4 |
| 84" | | 8/8 | 62.0 | 82.7 | 62.0 | 92.6 |
| 96" | | 10/8 | 62.0 | 71.3 | 62.0 | 92.9 |
| 108" | | 11/8 | 61.1 | 61.1 | 62.0 | 80.1 |
| 111" | | 11/8 | 58.8 | 58.8 | 62.0 | 77.3 |
| 72" | 48" (4) | 8/7 | 62.0 | 70.4 | 62.0 | 83.7 |
| 84" | | 8/8 | 62.0 | 62.9 | 62.0 | 71.0 |
| 96" | | 10/8 | 55.1 | 55.1 | 62.0 | 68.9 |
| 108" | | 11/8 | 50.7 | 50.7 | 62.0 | 62.9 |
| 111" | | 11/8 | 49.5 | 49.5 | 61.3 | 61.3 |
| 72" | 60" (5) | 8/7 | 49.1 | 49.1 | 61.3 | 61.3 |
| 84" | | 8/8 | 47.1 | 47.1 | 57.0 | 57.0 |
| 96" | | 10/8 | 44.5 | 44.5 | 53.7 | 53.7 |
| 108" | | 11/8 | 41.2 | 41.2 | 49.9 | 49.9 |
| 111" | | 11/8 | 40.3 | 40.3 | 48.8 | 48.8 |
| 74" | 26" (2) | 8/7 | 62.0 | 125.0 | 62.0 | 167.0 |
| 106–1/4" | | 11/8 | 62.0 | 85.0 | 62.0 | 125.6 |
| 111" | | 11/8 | 62.0 | 81.8 | 62.0 | 121.3 |
| 74" | 38–3/8" (3) | 8/7 | 62.0 | 86.3 | 62.0 | 100.1 |
| 106–1/4" | | 11/8 | 60.5 | 60.5 | 62.0 | 78.0 |
| 111" | | 11/8 | 57.1 | 57.1 | 62.0 | 73.7 |
| 74" | 50–5/8" (4) | 8/7 | 62.0 | 64.5 | 62.0 | 77.3 |
| 106–1/4" | | 11/8 | 48.7 | 48.7 | 60.2 | 60.2 |
| 111" | | 11/8 | 47.1 | 47.1 | 58.2 | 58.2 |
| 74" | 63" (5) | 8/7 | 44.5 | 44.5 | 54.5 | 54.5 |
| 106–1/4" | | 11/8 | 39.2 | 39.2 | 47.1 | 47.1 |
| 111" | | 11/8 | 38.0 | 38.0 | 45.9 | 45.9 |

A = NO. OF ANCHORS PER HEAD/SILL
( ) = NO. OF ANCHORS PER JAMB

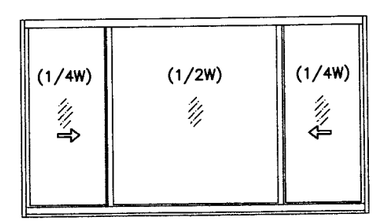


OPERATING VENTS TO BE 1/4 OF THE WINDOW WIDTH

Engr: DR. HUMAYOUN FAROOQ
STRUCTURES
FLA. PE # 16557
C.A.N. 3538
MAR 2 4 2006

Approved as complying with the Florida Building Code
Date APRIL 20, 2006
NOA# 05-1222.04
Miami Dade Product Control


AL–FAROOQ CORPORATION
ENGINEERS, PLANNERS & PRODUCT DESIGN
1235 SW 87 AVE
MIAMI, FLORIDA 33174
TEL. (305) 264–8100 FAX. (305) 262–6978
COMP–ANL\WOO–47PW


SERIES–300 ALUM HORIZ. SLIDING WINDOW

PINO WINDOWS CORPORATION
6860 N.W. 75TH STREET
MEDLEY, FL. 33166
TEL. (305) 888–9946 FAX (305) 888–8079

| revisions: | | | |
|---|---|---|---|
| no | date | by | description |
| A | 12.14.05 | | UPDATED FOR 2004 FBC |
| B | 03.23.06 | | SIZES REMOVED |

date: 10–27–00
scale: 1/2"=1'–0"
dr. by: HAMID
chk. by:

drawing no. WOO–47

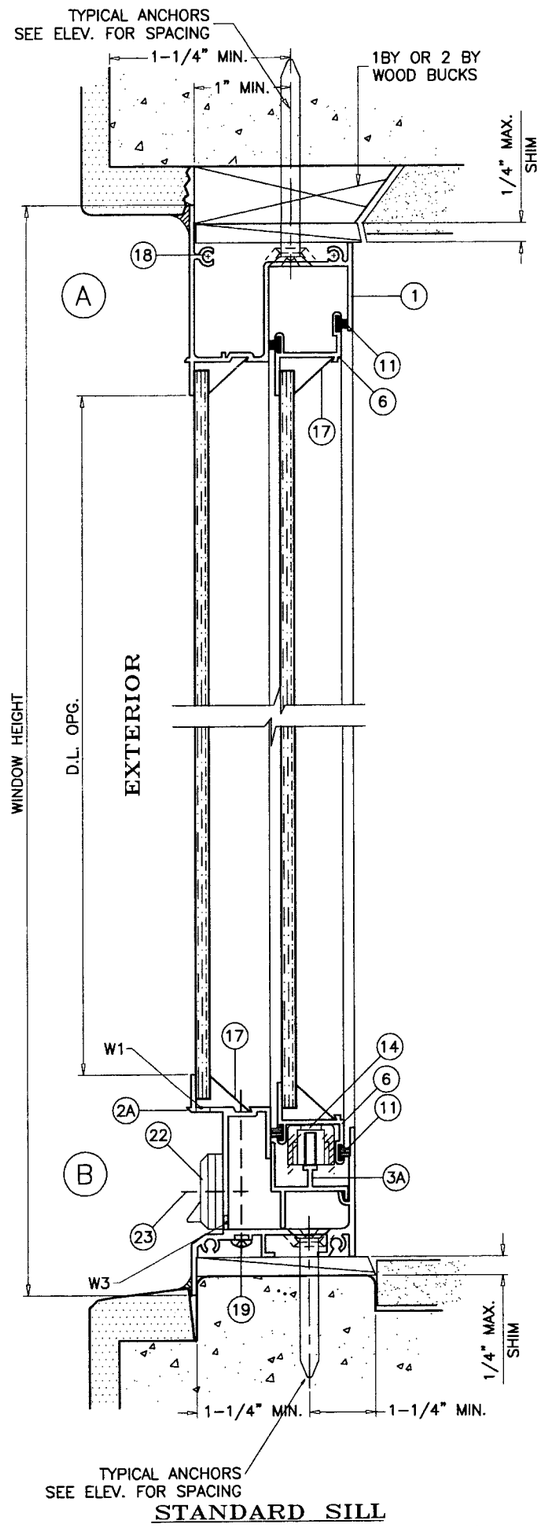


STANDARD SILL

(LIMIT EXTERIOR LOADS TO +53.3 PSF WITH THIS SILL)

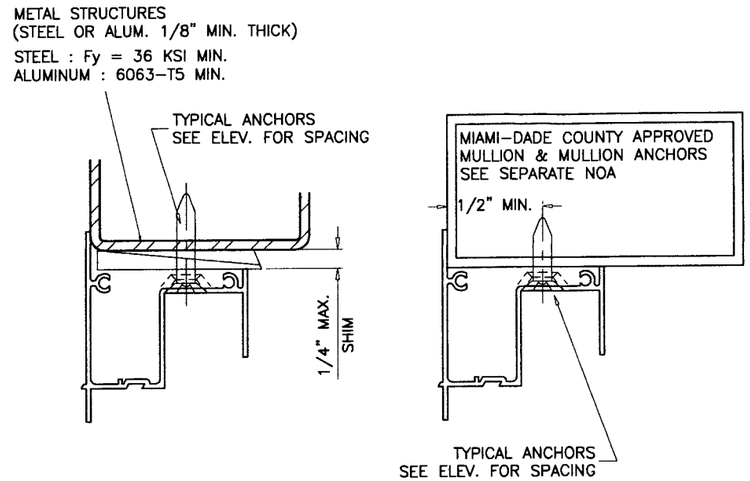


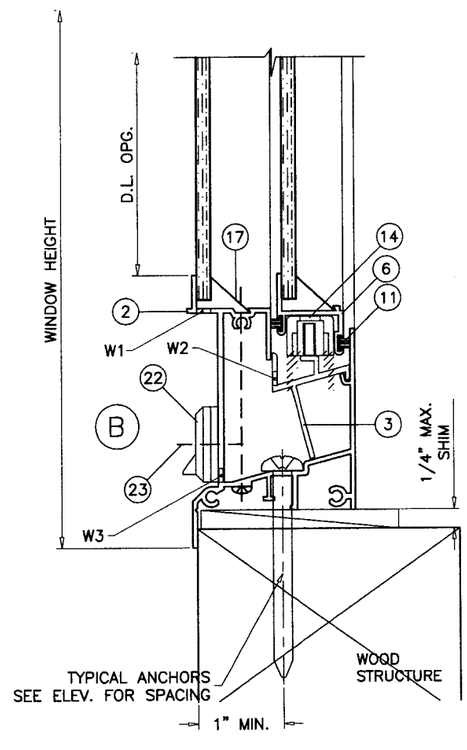


HI-RISE SILL

WOOD BUCKS AND METAL STRUCTURES NOT BY PINO WINDOWS MUST SUSTAIN LOADS IMPOSED BY GLAZING SYSTEM AND TRANSFER THEM TO THE BUILDING STRUCTURE.

## TYPICAL ANCHORS: SEE ELEV. FOR SPACING

**1/4" TAPCONS**

INTO WOOD STRUCTURES
2" MIN. PENETRATION INTO WOOD

THRU 1BY OR 2BY BUCKS INTO CONC. OR MASONRY
1-1/4" MIN. EMBED INTO CONC. OR MASONRY

DIRECTLY INTO CONC. OR MASONRY
1-1/4" MIN. EMBED INTO CONC. OR MASONRY
MIN. CONCRETE fc=3000 psi
MIN. MASONRY BLOCK fc=1500 psi

**#14 SMS OR SELF DRILLING SCREWS**

INTO METAL STRUCTURES (1/8" MIN. THICKNESS)
(1/4" MAX. SHIM SPACE)

**#10 SMS OR SELF DRILLING SCREWS**

INTO DADE COUNTY APPROVED MULLIONS
(NO SHIM SPACE)

## SEALANTS:

ALL FRAME AND VENT CORNERS, INSTALLATION SCREWS AND BOTTOM OF FIXED MEETING RAIL SEALED WITH CLEAR/ALUM COLORED SEALANT.

## WEEPHOLES:

W1 = (1-7/8" X 5/16") AT4" AND 25" FROM ENDS
W2 = (1/4" X 2") AT MIDPOINT OF TRACK
W3 = (7/8" X 3/8") AT 3-1/2" FROM EACH END

Engr: DR. HUMAYOUN FAROOQ
STRUCTURES
FLA. PE # 16557
C.A.N. 3538

MAR 2 4 2006

Approved as complying with the Florida Building Code
Date APRIL 20, 2006
NOA# 05-1222.04
Miami Dade Product Control Division
By

AL-FAROOQ CORPORATION
ENGINEERS, PLANNERS & PRODUCT DESIGN
1235 SW 87 AVE
MIAMI, FLORIDA 33174
TEL. (305) 264-8100 FAX. (305) 262-6978
COMP-ANL\W00-47PW

SERIES-300 ALUM HORIZ. SLIDING WINDOW

PINO WINDOWS CORPORATION
6860 N.W. 75TH STREET
MEDLEY, FL. 33166
TEL. (305) 888-9946 FAX (305) 888-8079

revisions:

| no | date | by | description |
|---|---|---|---|
| A | 12.14.05 | | UPDATED FOR 2004 FBC |
| B | 03.23.06 | | MIN. EDGE DISTANCES ADDED |

date: 10-27-00
scale: 1/2" = 1"
dr. by: HAMID
chk. by:

drawing no.
W00-47

sheet 3 of 6

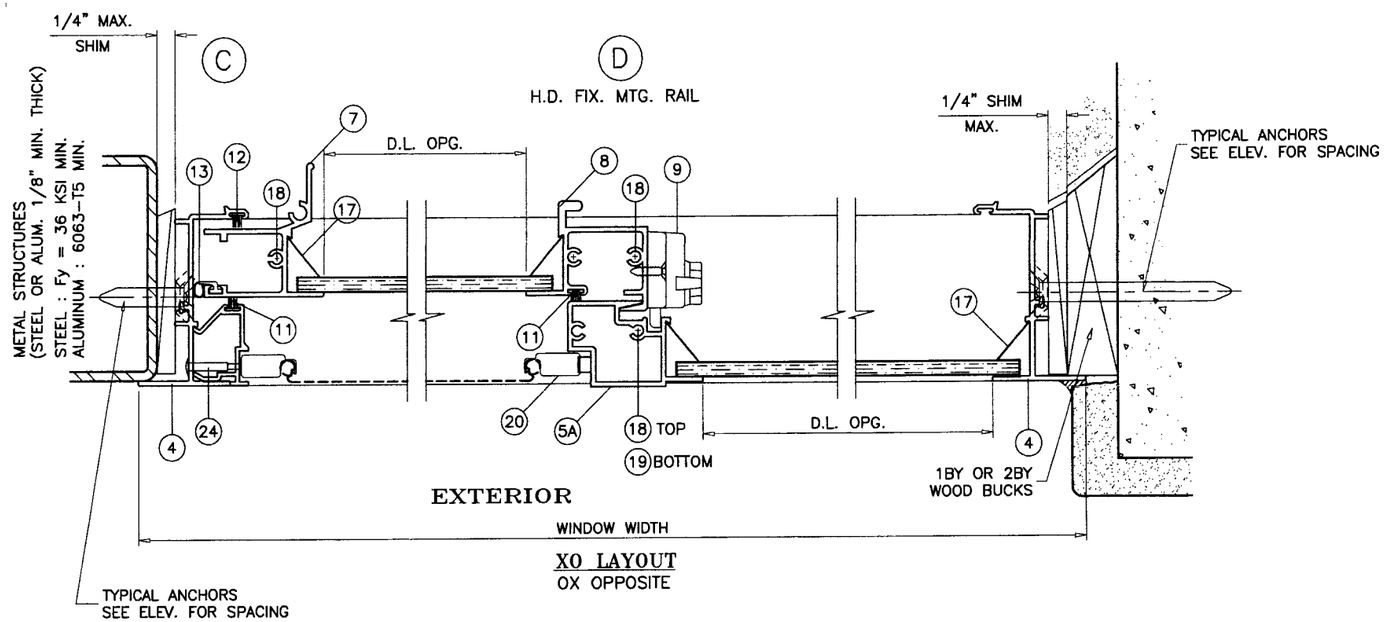


XO LAYOUT
OX OPPOSITE

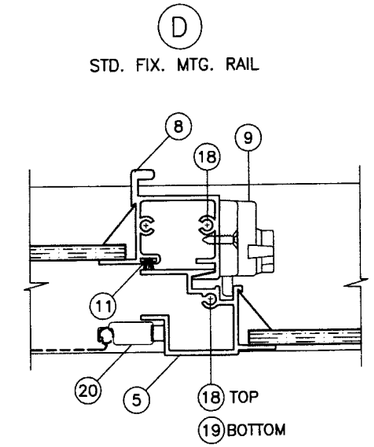


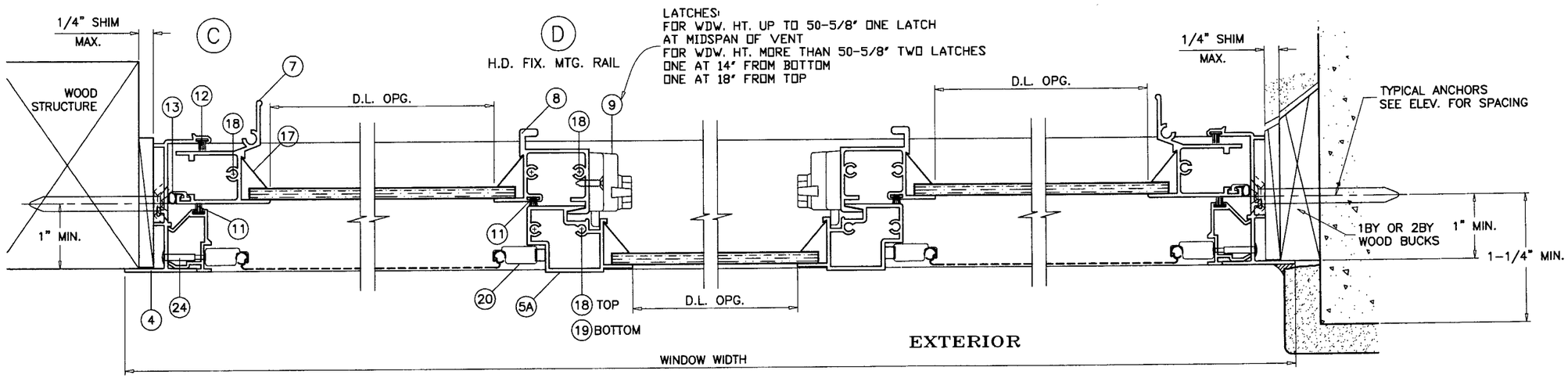


XOX LAYOUT

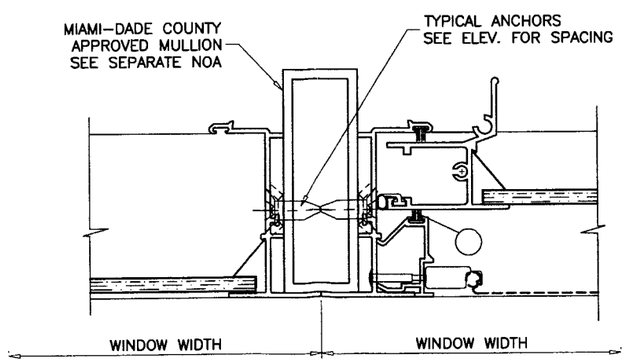


Engr: DR. HUMAYOUN FAROOQ
STRUCTURES
FLA. PE # 16557
C.A.N. 3538

MAR 24 2006

Approved as complying with the Florida Building Code
Date APRIL 20, 2006
NOA# 05-1222.04
Miami Dade Product Control Division
By


AL-FAROOQ CORPORATION
ENGINEERS, PLANNERS & PRODUCT DESIGN
1235 SW 87 AVE
MIAMI, FLORIDA 33174
TEL. (305) 264-8100 FAX. (305) 262-6978
COMP-ANL\W00-47PW


SERIES-300 ALUM HORIZ. SLIDING WINDOW

PINO WINDOWS CORPORATION
6860 N.W. 75TH STREET
MEDLEY, FL. 33166
TEL. (305) 888-9946 FAX (305) 888-8079

revisions:

| no | date | by | description |
|---|---|---|---|
| A | 12.14.05 | | UPDATED FOR 2004 FBC |
| B | 03.23.06 | | MIN. EDGE DISTANCES ADDED |

date: 10-27-00
scale: 1/2" = 1"
dr. by: HAMID
chk. by:

drawing no.
W00-47

sheet 4 of 6

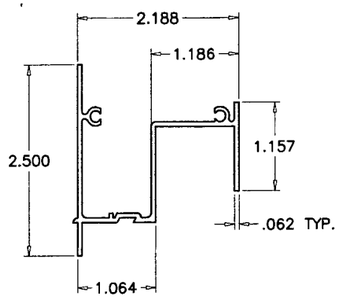


(1) FRAME HEAD

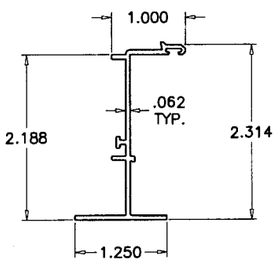


(4) FRAME JAMB

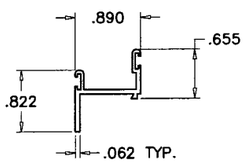


(6) VENT TOP/BOTTOM RAIL

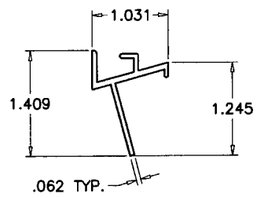


(3) HI-RISE SILL TRACK

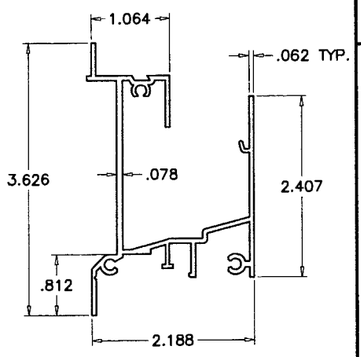


(2) HI-RISE SILL

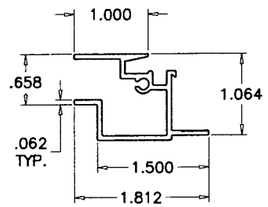


(5) STD. FIXED MTG. RAIL

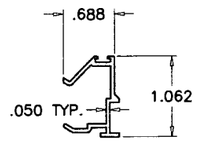


(10) SCREEN ADAPTER

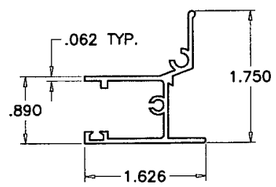


(7) JAMB STILE

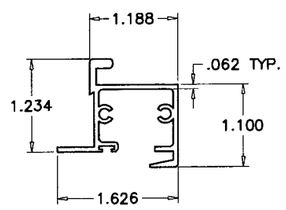


(8) MEETING RAIL

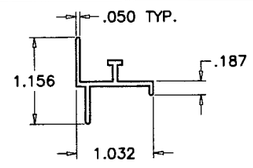


(3A) STD. SILL TRACK

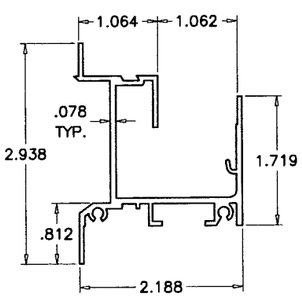


(2A) STANDARD SILL

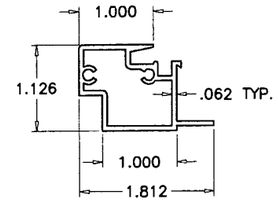


(5A) H.D. FIXED MTG. RAIL

| ITEM | PART # | QUANTITY | DESCRIPTION | MATERIAL | MANF./SUPPLIER/REMARKS |
|---|---|---|---|---|---|
| 1 | PDH-503 | 1 | FRAME HEAD | 6063-T5 | ALUMAX/BONNELL |
| 2 | PHS-606 | 1 | HI-RISE FRAME SILL | 6063-T5 | ALUMAX/BONNELL |
| 2A | PHS-601 | 1 | STD. FRAME SILL | 6063-T5 | ALUMAX/BONNELL |
| 3 | PHS-607 | 1 | HI-RISE SILL TRACK | 6063-T5 | ALUMAX/BONNELL |
| 3A | 26022 | 1 | STANDARD SILL TRACK | 6063-T5 | ALUMAX/BONNELL |
| 4 | PHS-603 | 2 | FRAME JAMB | 6063-T5 | ALUMAX/BONNELL |
| 5 | PDH-504 | 1/ VENT | STD. FIXED MEETING RAIL | 6063-T5 | ALUMAX/BONNELL |
| 5A | PDH-525 | 1/ VENT | H.D. FIXED MEETING RAIL | – | – |
| 6 | PDH-507 | 2/ VENT | TOP AND BOTTOM RAIL | 6063-T5 | ALUMAX/BONNELL |
| 7 | PDH-527 | 1/ VENT | JAMB STILE | 6063-T5 | ALUMAX/BONNELL |
| 8 | PDH-508 | 1/ VENT | INTERLOCK STILE | 6063-T5 | ALUMAX/BONNELL |
| 9 | 8725/000 | AS REQD. | METALLIC CAM LOCK (ZINC DIE CAST) | ZAMAK | ALLEN STEVENS |
| 10 | PHS-604 | AS REQD. | SCREEN ADAPTER | 6063-T5 | – |
| 11 | FS-7118-187 | AS REQD. | TOP & BOTTOM RAIL WEATHERSTRIPPING | – | SCHLEGEL FIN SEAL OR EQ. |
| 12 | PB-8327-187 | AS REQD. | JAMB STILE WEATHERSTRIPPING | – | SCHLEGEL OR EQ. |
| 13 | – | AS REQD. | BULB WEATHERSTRIPPING | VINYL | – |
| 14 | PHS-605 | 2/ VENT | ROLLER HOUSING | NYLON | M&M PLASTICS |
| 15 | – | 2/ VENT | WHEEL | ST. STEEL | – |
| 16 | – | 2/ VENT | ROLLER PIN | ST. STEEL | – |
| 17 | PDH-515 | AS REQD. | GLAZING BEAD | ALUMINUM | ROLL FORMED |
| 18 | – | AS REQD. | ASSEMBLY SCREWS (FRAME & VENT) | PL. CRS | # 8 X 3/4" PH SMS |
| 19 | – | 1/ VENT | MEETING RAIL SILL SCREW (BOTTOM) | PL. CRS | # 8 X 3-1/4" PH SMS |
| 20 | – | 1/ VENT | 5/16" BOX SCREEN | – | WARREN IND. OR EQUAL |
| 21 | PHS-604 | 1/ VENT | SCREEN ADAPTER | 6063-T5 | – |
| 22 | – | 2/ WINDOW | BAFFLE | NYLON | M&M PLASTICS |
| 23 | PHS-604 | 2/ BAFFLE | BAFFLE SCREWS | – | # 6 X 3/8" PH SMS |
| 24 | – | 2/ ADAPTER | #8-32 X 1/2" POST BINDING SCREWS | PL. CRS | – |

Engr: DR. HUMAYOUN FAROOQ
STRUCTURES
FLA. PE # 16557
C.A.N. 3538

MAR 24 2006

Approved as complying with the Florida Building Code
Date APRIL 20, 2006
NOA# 05-1222.04
Miami Dade Product Control Division
By


AL-FAROOQ CORPORATION
ENGINEERS, PLANNERS & PRODUCT DESIGN
1235 SW 87 AVE
MIAMI, FLORIDA 33174
TEL. (305) 264-8100 FAX. (305) 262-6978
COMP-ANL\W00-47PW


SERIES-300 ALUM HORIZ. SLIDING WINDOW

PINO WINDOWS CORPORATION
6860 N.W. 75TH STREET
MEDLEY, FL. 33166
TEL. (305) 888-9946 FAX (305) 888-8079

revisions:

| no | date | by | description |
|---|---|---|---|
| A | 12.14.05 | | UPDATED FOR 2004 FBC |
| B | 03.23.06 | | DIMENSIONS CORRECTED |

date: 10-27-00
scale: 1/2" = 1"
dr. by: HAMID
chk. by:

drawing no.
W00-47

sheet 5 of 6

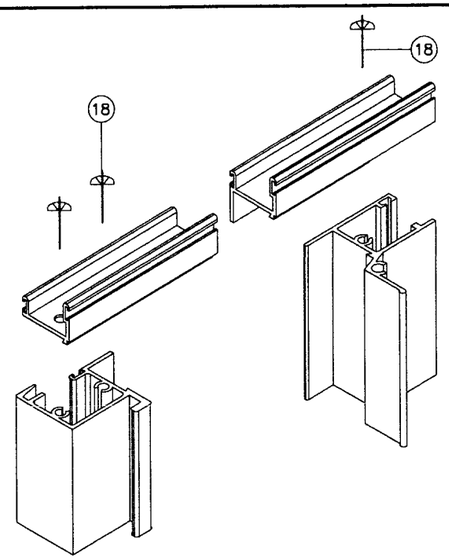


VENT TOP/BOTTOM CORNERS

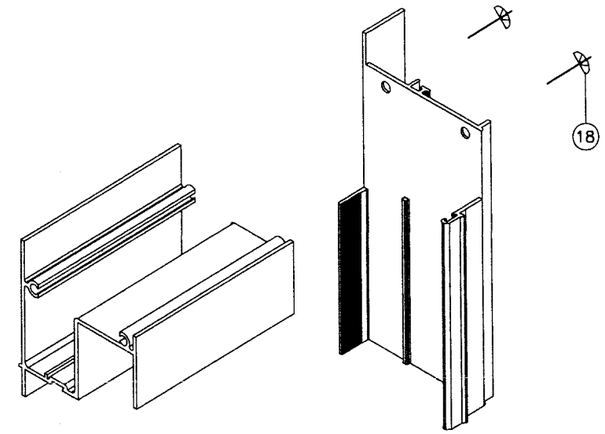


FRAME TOP CORNER

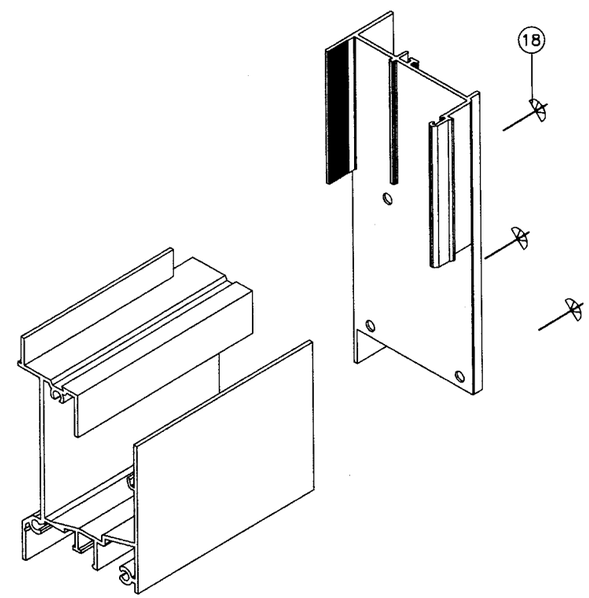


FRAME BOTTOM CORNER

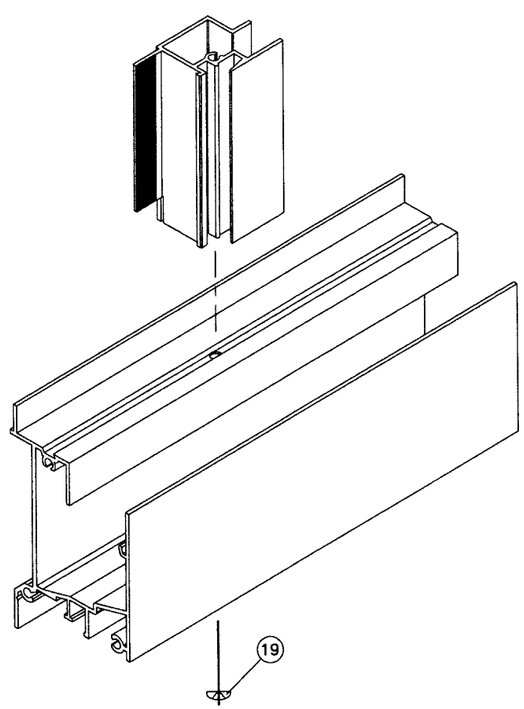


FIXED MTG. RAIL CORNER

Engr: DR. HUMAYOUN FAROOQ
STRUCTURES
FLA. PE # 16557
C.A.N. 3538

MAR 2 4 2006

Approved as complying with the Florida Building Code
Date APRIL 20, 2006
NOA# 05-1222.04
Miami Dade Product Control Division
By


AL-FAROOQ CORPORATION
ENGINEERS, PLANNERS & PRODUCT DESIGN
1235 SW 87 AVE
MIAMI, FLORIDA 33174
TEL. (305) 264-8100 FAX. (305) 262-6978
COMP-ANL\W00-47PW


SERIES-300 ALUM HORIZ. SLIDING WINDOW


PINO WINDOWS CORPORATION
6860 N.W. 75TH STREET
MEDLEY, FL. 33166
TEL. (305) 888-9946 FAX (305) 888-8079


revisions:

| no | date | by | description |
|---|---|---|---|
| A | 12.14.05 | | UPDATED FOR 2004 FBC |

date: 10-27-00
scale: 1/2" = 1"
dr. by: HAMID
chk. by:

drawing no.
W00-47

sheet 6 of 6