MIAMI-DADE

BUILDING CODE COMPLIANCE OFFICE (BCCO)
PRODUCT CONTROL DIVISION

MIAMI-DADE COUNTY, FLORIDA
METRO-DADE FLAGLER BUILDING
140 WEST FLAGLER STREET, SUITE 1603
MIAMI, FLORIDA 33130-1563
(305) 375-2901 FAX (305) 375-2908

# NOTICE OF ACCEPTANCE (NOA)

**Artezanos, Inc.**
**9455 SW 78th Street**
**Miami, FL 33173**

## SCOPE:

This NOA is being issued under the applicable rules and regulations governing the use of construction materials. The documentation submitted has been reviewed by Miami-Dade County Product Control Division and accepted by the Board of Rules and Appeals (BORA) to be used in Miami Dade County and other areas where allowed by the Authority Having Jurisdiction (AHJ).

This NOA shall not be valid after the expiration date stated below. The Miami-Dade County Product Control Division (In Miami Dade County) and/or the AHJ (in areas other than Miami Dade County) reserve the right to have this product or material tested for quality assurance purposes. If this product or material fails to perform in the accepted manner, the manufacturer will incur the expense of such testing and the AHJ may immediately revoke, modify, or suspend the use of such product or material within their jurisdiction. BORA reserves the right to revoke this acceptance, if it is determined by Miami-Dade County Product Control Division that this product or material fails to meet the requirements of the applicable building code.

This product is approved as described herein, and has been designed to comply with the High Velocity Hurricane Zone of the Florida Building Code.

**DESCRIPTION: Artezanos World Class**

**LABELING:** Each unit shall bear a permanent label with the manufacturer's name or logo, city, state and following statement: "Miami-Dade County Product Control Approved", unless otherwise noted herein.

**RENEWAL** of this NOA shall be considered after a renewal application has been filed and there has been no change in the applicable building code negatively affecting the performance of this product.

**TERMINATION** of this NOA will occur after the expiration date or if there has been a revision or change in the materials, use, and/or manufacture of the product or process. Misuse of this NOA as an endorsement of any product, for sales, advertising or any other purposes shall automatically terminate this NOA. Failure to comply with any section of this NOA shall be cause for termination and removal of NOA.

**ADVERTISEMENT:** The NOA number preceded by the words Miami-Dade County, Florida, and followed by the expiration date may be displayed in advertising literature. If any portion of the NOA is displayed, then it shall be done in its entirety.

**INSPECTION:** A copy of this entire NOA shall be provided to the user by the manufacturer or its distributors and shall be available for inspection at the job site at the request of the Building Official.

This revises NOA # 03-0807.03 and consists of pages 1 through 5.
The submitted documentation was reviewed by Alex Tigera.

## ROOFING ASSEMBLY APPROVAL

**Category:** Roofing
**Sub Category:** Roofing Tiles
**Material:** Clay

## 1. SCOPE

This approves a roofing system using "World Class Two Piece Handmade Tapered Mission Barrel Roofing Tile" Clay Roof Tile, as manufactured by Artezanos, Inc. described in Section 2 of this Notice of Acceptance. For the locations where the pressure requirements, as determined by applicable Building Code, does not exceed the values listed in section 4 herein. The attachment calculations shall be done as a moment based system.

## 2. PRODUCT DESCRIPTION

| Manufactured by Applicant | Dimensions | Test Specifications | Product Description |
|---|---|---|---|
| 2 Piece Handmade Tapered Mission Barrel Tile | l = 17"<br>w = 7"<br>½" thick | ASTM C 1167 | High profile, two piece, barrel, clay roof tile. For direct deck mortar set applications. |
| Italian Pan Tile | l = 19.4"<br>w = 10"<br>½" thick | ASTM C 1167 | Flat pan tile to be used in conjuction with Handmade Tapered Mission Barrel Tile as the cap. For direct deck mortar set applications. |
| Trim Pieces | l = varies<br>w = varies<br>varying thickness | ASTM C 1167 | Accessory trim, clay roof pieces for use at hips, rakes, ridges and valley terminations. |

### 2.1. EVIDENCE SUBMITTED

| Test Agency | Test Identifier | Test Name/Report | Date |
|---|---|---|---|
| Testwell Craig Laboratories & Consultants, Inc. | Lab #ABM-4 | Static Uplift Testing PA 101 (Mortar Set) | January 1995 |
| Testwell Craig Laboratories & Consultants, Inc. | Lab #ABM-20 | Static Uplift Testing PA 101 (Adhesive Set) | November 1995 |
| Testwell Craig Laboratories & Consultants, Inc. | Lab #ABM-1 | Physical Properties ASTM C 1167 | 2003 |
| IBA Consultants Inc. | 2352-39 | Physical Properties ASTM C 1167 | Nov. 2005 |
| IBA Consultants Inc. | 2352-38 | Static Uplift Testing TAS 101 (Adhesive Set) | Dec. 2005 |

## 3. LIMITATIONS

**3.1** Fire classification is not part of this acceptance.

**3.2** For mortar or adhesive set tile applications, a static field uplift test in accordance with RAS 106 may required, refer to applicable building code.

**3.3** Applicant shall retain the services of a Miami-Dade County Certified Laboratory to perform quarterly test in accordance with TAS 112, appendix 'A'. Such testing shall be submitted to the Building Code Compliance Office for review.

**3.4** Minimum underlayments shall be in compliance with the applicable Roofing Applications Standards listed section 4.1 herein.

**3.5** 30/90 hot mopped underlayment applications may be installed perpendicular to the roof slope unless stated otherwise by the underlayment material manufacturers published literature.

**3.6** This acceptance is for wood deck applications. Minimum deck requirements shall be in compliance with applicable building code.

## 4. INSTALLATION

4.1 "World Class Two Piece Handmade Tapered Mission Roofing Tile" and its components shall be installed in strict compliance with Roofing Application Standard RAS 120.

4.2 Data For Attachment Calculations

**Table 1: Average Weight (W) and Dimensions (l x w)**

| Tile Profile | Weight-W (lbf) | Length - l (feet) | Width - w (feet) |
|---|---|---|---|
| Two Piece Handmade Tapered Mission Tile | 5.8 | 1.42 | 0.58 |

**Table 2: Aerodynamic Multipliers - $\lambda$ ($ft^3$)**

| Tile Profile | $\lambda$ ($ft^3$) Direct Deck Application |
|---|---|
| Two Piece Handmade Tapered Mission Tile | 0.22 |

**Table 3: Restoring Moments due to Gravity - $M_g$ (ft-lbf)**

| Tile Profile | 2":12" | 3":12" | 4":12" | 5":12" | 6":12" | 7":12" |
|---|---|---|---|---|---|---|
| Two Piece Handmade Tapered Mission Tile | 3.9 | 3.8 | 3.7 | 3.6 | 3.5 | 3.4 |

**Table 4: Attachment Resistance Expressed as a Moment - $M_f$ (ft-lbf) for Mortar or Adhesive Set Systems**

| Tile Profile | Tile Application | Attachment Resistance |
|---|---|---|
| Two Piece Handmade Tapered Mission Tile | Mortar Set | 57.4 |
| | Adhesive Set | 111.4[1] |

1. Place 42 grams per pan and 42 grams per cap of PolyPro™.

## 5. LABELING

All tiles shall bear the imprint or identifiable marking of the manufacturer's name or logo **(See Detail Below)**, or following statement: "Miami-Dade County Product Control Approved".

**ARTEZANOS WORLD CLASS TILE LABEL (LOCATED ON UNDERSIDE OF TILE)**

## 6. BUILDING PERMIT REQUIREMENTS

**6.1** Application for building permit shall be accompanied by copies of the following:

**6.1.1** This Notice of Acceptance.

**6.1.2** Any other documents as required by the Building Official in order to properly evaluate the installation of this system.

## PROFILE DRAWING

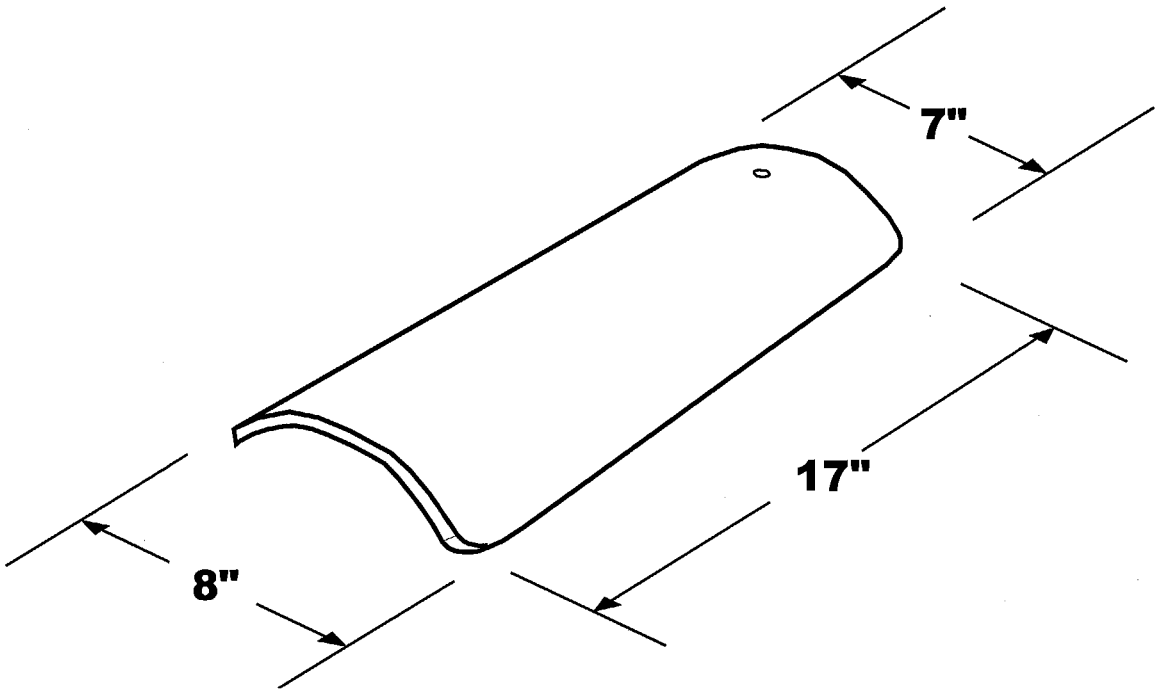


ARTESANOS, INC. " 2 PIECE HANDMADE TAPERED MISSION BARREL TILE

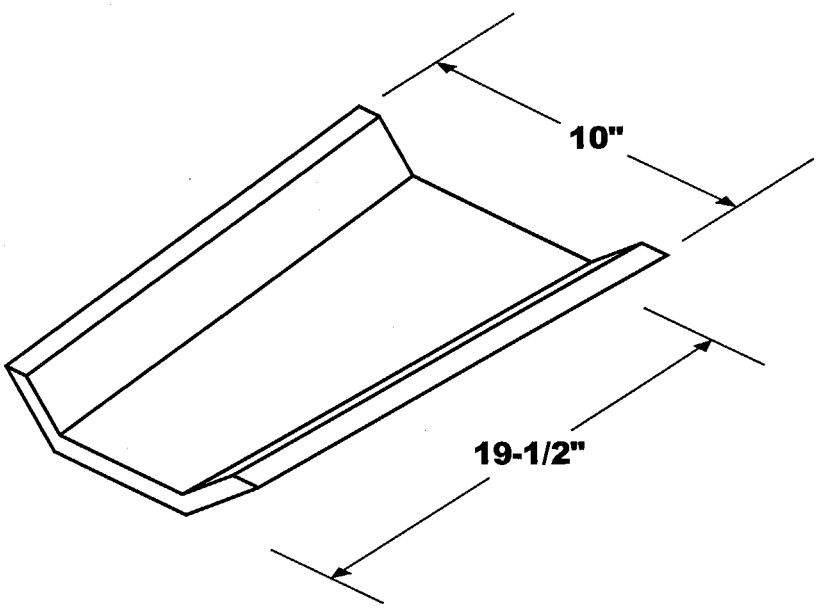


ARTESANOS, INC. ITALIAN PAN TILE

**END OF THIS ACCEPTANCE**