MIAMI-DADE COUNTY

BUILDING CODE COMPLIANCE OFFICE (BCCO)
PRODUCT CONTROL DIVISION

MIAMI-DADE COUNTY, FLORIDA
METRO-DADE FLAGLER BUILDING
140 WEST FLAGLER STREET, SUITE 1603
MIAMI, FLORIDA 33130-1563
(305) 375-2901 FAX (305) 375-2908
www.buildingcodeonline.com

# NOTICE OF ACCEPTANCE (NOA)

**Crawford Tracey Corporation**
**3301 SW 13 Drive**
**Deerfield Beach, FL 33442**

**SCOPE:**

This NOA is being issued under the applicable rules and regulations governing the use of construction materials. The documentation submitted has been reviewed by Miami-Dade County Product Control Division and accepted by the Board of Rules and Appeals (BORA) to be used in Miami Dade County and other areas where allowed by the Authority Having Jurisdiction (AHJ).

This NOA shall not be valid after the expiration date stated below. The Miami-Dade County Product Control Division (In Miami Dade County) and/or the AHJ (in areas other than Miami Dade County) reserve the right to have this product or material tested for quality assurance purposes. If this product or material fails to perform in the accepted manner, the manufacturer will incur the expense of such testing and the AHJ may immediately revoke, modify, or suspend the use of such product or material within their jurisdiction. BORA reserves the right to revoke this acceptance, if it is determined by Miami-Dade County Product Control Division that this product or material fails to meet the requirements of the applicable building code.

This product is approved as described herein, and has been designed to comply with the Florida Building Code, including the High Velocity Hurricane Zone.

**DESCRIPTION: Series "Pro- Tech 45SG" Aluminum Window Wall System – L.M.I.**

**APPROVAL DOCUMENT:** Drawing No. **W05-31,** titled "Pro-Tech 45SG Alum. Window Wall System (L.M.I.)", sheets 1 through 8 of 8 prepared by Al –Farooq Corporation., dated 06/24/05 signed and sealed by Humayoun Farooq, P.E., bearing the Miami-Dade County Product Control Approval stamp with the Notice of Acceptance number and approval date by the Miami-Dade County Product Control Division.

**MISSILE IMPACT RATING: Large and Small Missile Impact**

**LABELING:** Each unit shall bear a permanent label with the manufacturer's name or logo, city, state and following statement: "Miami-Dade County Product Control Approved", unless otherwise noted herein.

**RENEWAL** of this NOA shall be considered after a renewal application has been filed and there has been no change in the applicable building code negatively affecting the performance of this product.

**TERMINATION** of this NOA will occur after the expiration date or if there has been a revision or change in the materials, use, and/or manufacture of the product or process. Misuse of this NOA as an endorsement of any product, for sales, advertising or any other purposes shall automatically terminate this NOA. Failure to comply with any section of this NOA shall be cause for termination and removal of NOA.

**ADVERTISEMENT:** The NOA number preceded by the words Miami-Dade County, Florida, and followed by the expiration date may be displayed in advertising literature. If any portion of the NOA is displayed, then it shall be done in its entirety.

**INSPECTION:** A copy of this entire NOA shall be provided to the user by the manufacturer or its distributors and shall be available for inspection at the job site at the request of the Building Official.

This NOA consists of this page 1 and evidence pages E-1, as well as approval document mentioned above.

The submitted documentation was reviewed by **Jaime D. Gascon, P.E.**

PRODUCT CONTROL ACCEPTED

J. Gascon
6/2/06

**Crawford Tracey Corporation**

## NOTICE OF ACCEPTANCE: EVIDENCE SUBMITTED

**A. DRAWINGS**

1. Manufacturer's die drawings and sections.
2. Drawing No. **W05-31** dated "Pro –Tech Alum. Window Wall System (L.M.I)", sheets 1 through 8 of 8 prepared by AL –Farooq Corporation., dated 06/24/05, signed and sealed by, Humayoun Farooq, P.E.

**B. TESTS**

1. Test reports on 1) Air Infiltration Test, per FBC, TAS 202-94
   2) Uniform Static Air Pressure Test, Loading per FBC, TAS 202-94
   3) Water Resistance Test, per FBC, TAS 202-94
   4) Large Missile Impact Test per FBC, TAS 201-94
   5) Cyclic Wind Pressure Loading per FBC, TAS 203-94

   along with marked-up drawings and installation diagram of a Pro –Tech 45SG -LMI, prepared by American Test Lab of South Florida, Test Report No. **ATL-0310.01-05** dates 06/01/05, signed and sealed by Henry Hattem, P.E.

**C. CALCULATIONS**

1. Anchor Calculations and structural analysis, prepared by AL-Farooq Corporation., dated 12/15/05 and revised on May 17, 2006, signed and sealed by Humayoun Farooq, P.E.
   Complies with ASTM-E1300-98

**D. QUALITY ASSURANCE**

1. Miami Dade Building Code Compliance Office (BCCO).

**E. MATERIAL CERTIFICATIONS**

1. Notice of Acceptance No. **01-1204.01** issued to E.I. DuPont DeNemours for "**Sentry ® Plus**" dated 01/17/02, expiring on 01/14/07.
2. Notice of Acceptance No. **03-0415.13** issued to Solutia Inc. for "**Vanceva Composites** used for lamination of glass" dated 12/11/03, expiring on 12/11/08.
3. Notice of Acceptance No. **01-0205.02** issued to Solutia Inc. for "**Saflex/ Keepsafe Maximum**" dated 05/17/01, expiring on 05/21/06.

**F. STATEMENTS**

1. Statement letter of code compliance and no financial interest, dated 12/15/05 signed and sealed by Humayoun Farooq, P.E.

**G. OTHER**

1. Letter from the consultant, dated 05/23/06, stating that the product is in compliance with the Florida Building Code (FBC).

**Jaime D. Gascon, P.E.**
**Chief, Product Control Division**
**NOA No 06-0119.10**
**Expiration Date: June 22, 2011**
**Approval Date: June 22, 2006**

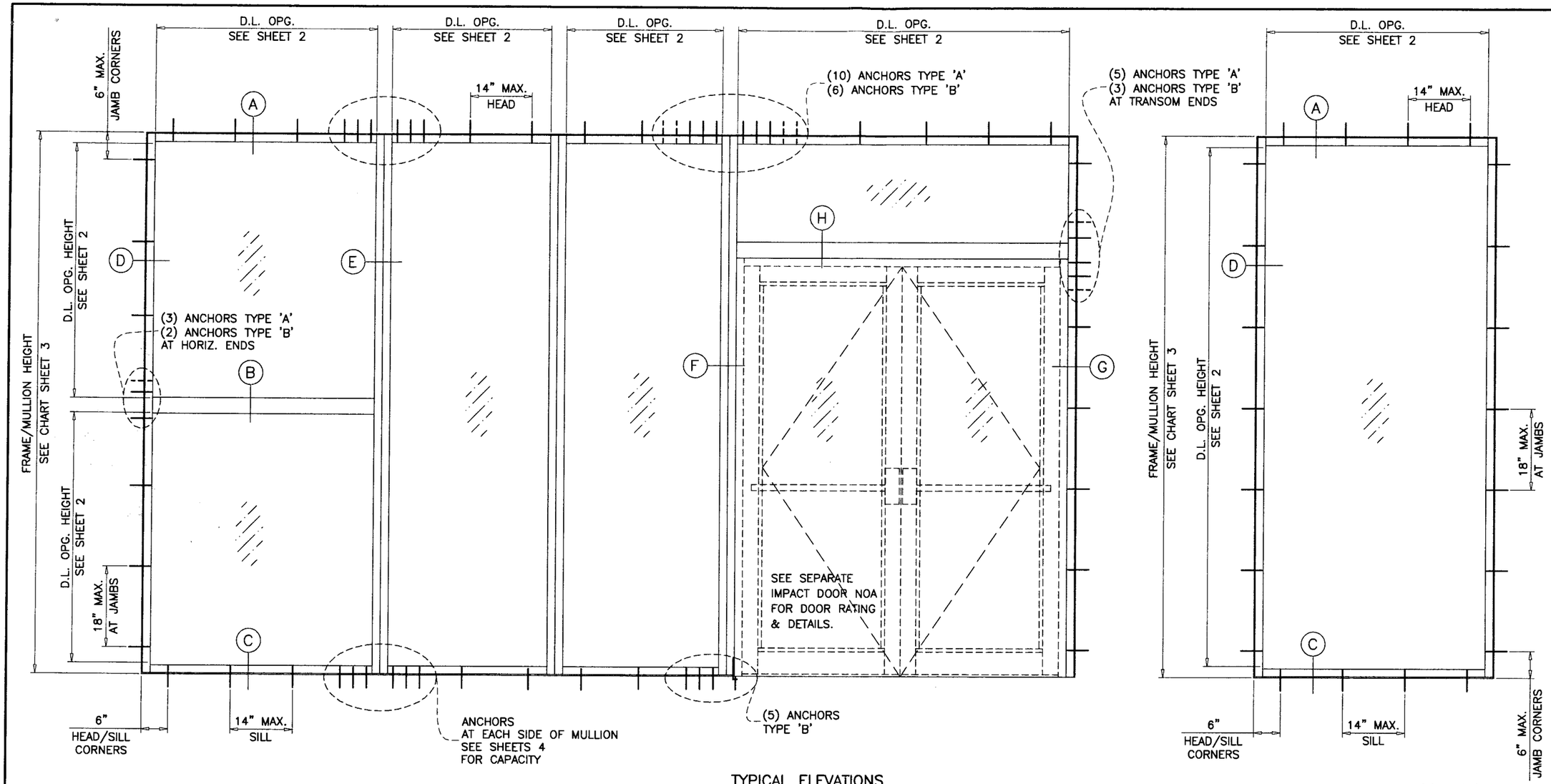


TYPICAL ELEVATIONS

## PRO-TECH 45SG ALUM WINDOW WALL SYSTEM

WINDOW WALL SYSTEM IS RATED FOR LARGE MISSILE IMPACT. SHUTTERS ARE NOT REQUIRED.

THIS SYSTEM MAY BE USED IN CONJUNCTION WITH MIAMI-DADE COUNTY APPROVED IMPACT RESISTANT FRENCH DOORS.

CODE REQUIREMENTS FOR SAFEGUARDS MUST BE OBSERVED.

---

THIS PRODUCT HAS BEEN DESIGNED AND TESTED TO COMPLY WITH THE REQUIREMENTS OF THE FLORIDA BUILDING CODE 2004 EDITION (REV. 2005) INCLUDING HIGH VELOCITY HURRICANE ZONE (HVHZ).

WOOD BUCKS BY OTHERS, MUST BE ANCHORED PROPERLY TO TRANSFER LOADS TO THE STRUCTURE.

ANCHORS SHALL BE AS LISTED, SPACED AS SHOWN ON DETAILS, ANCHORS EMBEDMENT TO BASE MATERIAL SHALL BE BEYOND WALL DRESSING OR STUCCO.

ANCHORING OR LOADING CONDITIONS NOT SHOWN IN THESE DETAILS ARE NOT PART OF THIS APPROVAL.

A LOAD DURATION INCREASE IN ALLOWABLE STRESS IS USED IN DESIGN OF ANCHORS INTO WOOD ONLY.

ALL STEEL IN CONTACT WITH ALUMINUM TO BE PAINTED OR PLATED.

## INSTRUCTIONS:

USE CHARTS AS FOLLOWS.

**STEP 1** DETERMINE DESIGN WIND LOAD REQUIREMENTS BASED ON WIND VELOCITY, BLDG. HEIGHT, WIND ZONE USING APPLICABLE ASCE 7 STANDARD.

**STEP 2** SEE CHARTS ON SHEETS 2 FOR DESIGN LOAD CAPACITY OF DESIRED GLASS SIZE BASED ON APPLICABLE WIND DURATION.

**STEP 3** CHECK MULLION CAPACITY FOR A GIVEN SPACING AND HEIGHT USING CHARTS ON SHEET 3 THE CAPACITY SHOULD EXCEED THE DESIGN LOAD.

**STEP 4** USING CHART ON SHEETS 4 SELECT ANCHOR OPTION WITH DESIGN RATING MORE THAN DESIGN LOAD SPECIFIED IN STEP 1 ABOVE.

**STEP 5** THE LOWEST VALUE RESULTING FROM STEPS 2, 3 AND 4 SHALL APPLY TO ENTIRE SYSTEM.

Approved as complying with the Florida Building Code
Date 06/22/06
NOA# 06-0419.10
Miami-Dade Product Control Division
By

LAMINATED GLASS
LARGE MISSILE IMPACT

Engr: DR. HUMAYOUN FAROOQ
STRUCTURES
FLA. PE # 16557
C.A.N. 3538
MAY 18 2006


AL-FAROOQ CORPORATION
ENGINEERS, PLANNERS & PRODUCT DESIGN
1235 SW 87 AVE
MIAMI, FLORIDA 33174
TEL. (305) 264-8100 FAX. (305) 262-6978
STORE\W05-31CTC


PRO-TECH 45SG ALUM WINDOW WALL SYSTEM (L.M.I.)


CRAWFORD TRACEY CORPORATION
3301 SW 13TH DRIVE
DEERFIELD BEACH, FL. 33442-8101
TEL. (954) 698-6888 FAX. (954) 698-6889


| revisions: | | | |
|---|---|---|---|
| no | date | by | description |

date: 06-24-05
scale: 1/2"=1'-0"
dr. by: HAMID
chk. by:

drawing no.
W05-31

## GLASS LOAD CAPACITY – PSF
BASED ON ASTM E1300-98 (60 SEC. WIND)

| NOMINAL DIMS. | | TYPE 'A' | TYPE 'B'/'C' |
|---|---|---|---|
| D.L.O. WIDTH | D.L.O. HEIGHT | EXT. (+) INT. (–) | EXT. (+) INT. (–) |
| 24" | 54" | 80.0 | 100.0 |
| 30" | | 80.0 | 100.0 |
| 36" | | 80.0 | 100.0 |
| 42" | | 80.0 | 100.0 |
| 48" | | 80.0 | 100.0 |
| 54" | | 80.0 | 100.0 |
| 60" | | 80.0 | 100.0 |
| 66" | | 80.0 | 100.0 |
| 72" | | 80.0 | 100.0 |
| 24" | 60" | 80.0 | 100.0 |
| 30" | | 80.0 | 100.0 |
| 36" | | 80.0 | 100.0 |
| 42" | | 80.0 | 100.0 |
| 48" | | 80.0 | 100.0 |
| 54" | | 80.0 | 100.0 |
| 60" | | 80.0 | 100.0 |
| 66" | | – | 100.0 |
| 72" | | – | 100.0 |
| 24" | 66" | 80.0 | 100.0 |
| 30" | | 80.0 | 100.0 |
| 36" | | 80.0 | 100.0 |
| 42" | | 80.0 | 100.0 |
| 48" | | 80.0 | 100.0 |
| 54" | | 80.0 | 100.0 |
| 60" | | – | 100.0 |
| 66" | | – | 100.0 |
| 72" | | – | 100.0 |
| 24" | 72" | 80.0 | 100.0 |
| 30" | | 80.0 | 100.0 |
| 36" | | 80.0 | 100.0 |
| 42" | | 80.0 | 100.0 |
| 48" | | 80.0 | 100.0 |
| 54" | | 80.0 | 100.0 |
| 60" | | – | 100.0 |
| 66" | | – | 100.0 |
| 72" | | – | 100.0 |
| 24" | 78" | 80.0 | 100.0 |
| 30" | | 80.0 | 100.0 |
| 36" | | 80.0 | 100.0 |
| 42" | | 80.0 | 100.0 |
| 48" | | 80.0 | 100.0 |
| 54" | | – | 100.0 |
| 60" | | – | 100.0 |
| 66" | | – | 96.9 |
| 24" | 84" | 80.0 | 100.0 |
| 30" | | 80.0 | 100.0 |
| 36" | | 80.0 | 100.0 |
| 42" | | 80.0 | 100.0 |
| 48" | | – | 100.0 |
| 54" | | – | 100.0 |
| 60" | | – | 98.8 |

## GLASS LOAD CAPACITY – PSF
BASED ON ASTM E1300-98 (60 SEC. WIND)

| NOMINAL DIMS. | | TYPE 'A' | TYPE 'B'/'C' |
|---|---|---|---|
| D.L.O. WIDTH | D.L.O. HEIGHT | EXT. (+) INT. (–) | EXT. (+) INT. (–) |
| 24" | 90" | 80.0 | 100.0 |
| 30" | | 80.0 | 100.0 |
| 36" | | 80.0 | 100.0 |
| 42" | | 80.0 | 100.0 |
| 48" | | – | 100.0 |
| 54" | | – | 100.0 |
| 24" | 96" | 80.0 | 100.0 |
| 30" | | 80.0 | 100.0 |
| 36" | | 80.0 | 100.0 |
| 42" | | – | 100.0 |
| 48" | | – | 100.0 |
| 54" | | – | 95.8 |
| 24" | 102" | 80.0 | 100.0 |
| 30" | | 80.0 | 100.0 |
| 36" | | 80.0 | 100.0 |
| 42" | | – | 100.0 |
| 48" | | – | 100.0 |
| 24" | 108" | 80.0 | 100.0 |
| 30" | | 80.0 | 100.0 |
| 36" | | 80.0 | 100.0 |
| 42" | | – | 100.0 |
| 48" | | – | 100.0 |
| 24" | 114" | 80.0 | 100.0 |
| 30" | | 80.0 | 100.0 |
| 36" | | – | 100.0 |
| 42" | | – | 100.0 |
| 24" | 120" | 80.0 | 100.0 |
| 30" | | 80.0 | 100.0 |
| 36" | | – | 100.0 |
| 42" | | – | 100.0 |
| 44–1/2" | 116–1/2" | – | 100.0 |
| 56–1/2" | 68–1/2" | 80.0 | 100.0 |
| 56–1/2" | 92–1/2" | – | 94.9 |

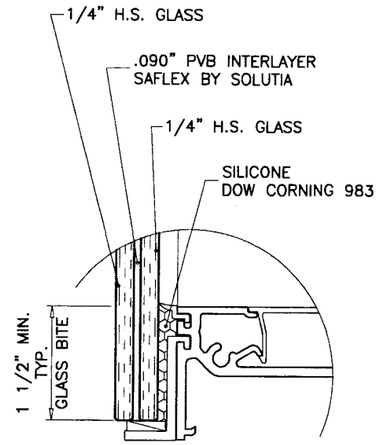


GLASS TYPE 'A'

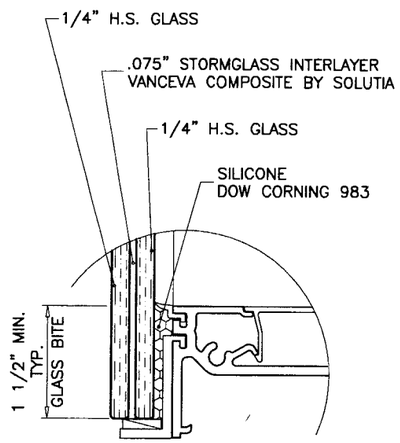


GLASS TYPE 'B'

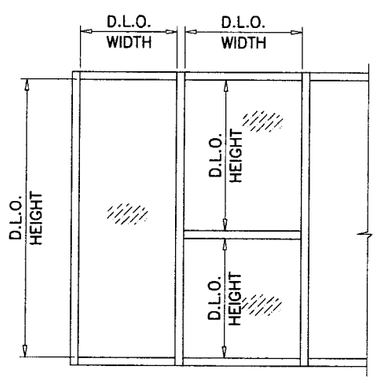


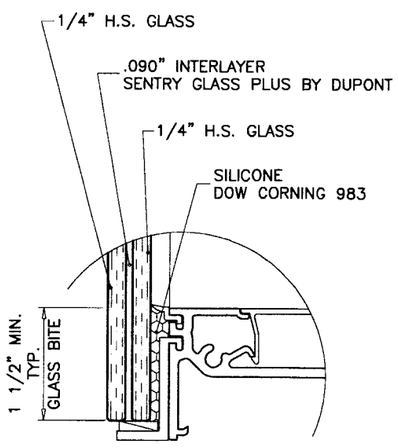


GLASS TYPE 'C'

## GLASS LOAD CAPACITY – PSF
BASED ON ASTM E1300-02 (3 SEC. GUSTS)

| NOMINAL DIMS. | | TYPE 'A' | TYPE 'B'/'C' |
|---|---|---|---|
| D.L.O. WIDTH | D.L.O. HEIGHT | EXT. (+) INT. (–) | EXT. (+) INT. (–) |
| 24" | 54" | 80.0 | 100.0 |
| 30" | | 80.0 | 100.0 |
| 36" | | 80.0 | 100.0 |
| 42" | | 80.0 | 100.0 |
| 48" | | 80.0 | 100.0 |
| 54" | | 80.0 | 100.0 |
| 60" | | 80.0 | 100.0 |
| 66" | | 80.0 | 100.0 |
| 72" | | 80.0 | 100.0 |
| 24" | 60" | 80.0 | 100.0 |
| 30" | | 80.0 | 100.0 |
| 36" | | 80.0 | 100.0 |
| 42" | | 80.0 | 100.0 |
| 48" | | 80.0 | 100.0 |
| 54" | | 80.0 | 100.0 |
| 60" | | 80.0 | 100.0 |
| 66" | | – | 100.0 |
| 72" | | – | 100.0 |
| 24" | 66" | 80.0 | 100.0 |
| 30" | | 80.0 | 100.0 |
| 36" | | 80.0 | 100.0 |
| 42" | | 80.0 | 100.0 |
| 48" | | 80.0 | 100.0 |
| 54" | | 80.0 | 100.0 |
| 60" | | – | 100.0 |
| 66" | | – | 100.0 |
| 72" | | – | 100.0 |
| 24" | 72" | 80.0 | 100.0 |
| 30" | | 80.0 | 100.0 |
| 36" | | 80.0 | 100.0 |
| 42" | | 80.0 | 100.0 |
| 48" | | 80.0 | 100.0 |
| 54" | | 80.0 | 100.0 |
| 60" | | – | 100.0 |
| 66" | | – | 100.0 |
| 72" | | – | 100.0 |
| 24" | 78" | 80.0 | 100.0 |
| 30" | | 80.0 | 100.0 |
| 36" | | 80.0 | 100.0 |
| 42" | | 80.0 | 100.0 |
| 48" | | 80.0 | 100.0 |
| 54" | | – | 100.0 |
| 60" | | – | 100.0 |
| 66" | | – | 100.0 |
| 24" | 84" | 80.0 | 100.0 |
| 30" | | 80.0 | 100.0 |
| 36" | | 80.0 | 100.0 |
| 42" | | 80.0 | 100.0 |
| 48" | | – | 100.0 |
| 54" | | – | 100.0 |
| 60" | | – | 100.0 |

## GLASS LOAD CAPACITY – PSF
BASED ON ASTM E1300-02 (3 SEC. GUSTS)

| NOMINAL DIMS. | | TYPE 'A' | TYPE 'B'/'C' |
|---|---|---|---|
| D.L.O. WIDTH | D.L.O. HEIGHT | EXT. (+) INT. (–) | EXT. (+) INT. (–) |
| 24" | 90" | 80.0 | 100.0 |
| 30" | | 80.0 | 100.0 |
| 36" | | 80.0 | 100.0 |
| 42" | | 80.0 | 100.0 |
| 48" | | – | 100.0 |
| 54" | | – | 100.0 |
| 24" | 96" | 80.0 | 100.0 |
| 30" | | 80.0 | 100.0 |
| 36" | | 80.0 | 100.0 |
| 42" | | – | 100.0 |
| 48" | | – | 100.0 |
| 54" | | – | 100.0 |
| 24" | 102" | 80.0 | 100.0 |
| 30" | | 80.0 | 100.0 |
| 36" | | 80.0 | 100.0 |
| 42" | | – | 100.0 |
| 48" | | – | 100.0 |
| 24" | 108" | 80.0 | 100.0 |
| 30" | | 80.0 | 100.0 |
| 36" | | 80.0 | 100.0 |
| 42" | | – | 100.0 |
| 48" | | – | 100.0 |
| 24" | 114" | 80.0 | 100.0 |
| 30" | | 80.0 | 100.0 |
| 36" | | – | 100.0 |
| 42" | | – | 100.0 |
| 24" | 120" | 80.0 | 100.0 |
| 30" | | 80.0 | 100.0 |
| 36" | | – | 100.0 |
| 42" | | – | 100.0 |
| 44–1/2" | 116–1/2" | – | 100.0 |
| 56–1/2" | 68–1/2" | 80.0 | 100.0 |
| 56–1/2" | 92–1/2" | – | 94.9 |

Approved as complying with the Florida Building Code
Date 06/22/06
NOAH 06-0119.10
Miami-Dade Product Control Division
By

Engr: DR. HUMAYOUN FAROOQ
STRUCTURES
FLA. PE # 16557
C.A.N. 3538

MAY 18 2006


AL-FAROOQ CORPORATION
ENGINEERS, PLANNERS & PRODUCT DESIGN
1235 SW 87 AVE
MIAMI, FLORIDA 33174
TEL. (305) 264-8100 FAX. (305) 262-6978
STORE\W05-31CTC


PRO-TECH 45SG ALUM WINDOW WALL SYSTEM (L.M.I.)

CRAWFORD TRACEY CORPORATION
3301 SW 13TH DRIVE
DEERFIELD BEACH, FL. 33442-8101
TEL. (954) 698-6888 FAX. (954) 698-6889

| revisions: | | | |
|---|---|---|---|
| no | date | by | description |

date: 06-24-05
scale: 1/2" = 1"
dr. by: HAMID
chk. by:

drawing no.
W05-31

## MULLION LOAD CAPACITY – PSF
WITHOUT INTERMEDIATE HORIZONTALS

| NOMINAL DIMS. | | WITHOUT REINF. | LIGHT REINF. | HEAVY REINF. |
|---|---|---|---|---|
| WIDTH (W) | FRAME HEIGHT | EXT. (+) INT. (–) | EXT. (+) INT. (–) | EXT. (+) INT. (–) |
| 24" | 78" | 100.0 | 100.0 | 100.0 |
| 30" | | 100.0 | 100.0 | 100.0 |
| 36" | | 100.0 | 100.0 | 100.0 |
| 42" | | 100.0 | 100.0 | 100.0 |
| 48" | | 100.0 | 100.0 | 100.0 |
| 54" | | 100.0 | 100.0 | 100.0 |
| 60" | | 100.0 | 100.0 | 100.0 |
| 66" | | 100.0 | 100.0 | 100.0 |
| 72" | | 100.0 | 100.0 | 100.0 |
| 24" | 84" | 100.0 | 100.0 | 100.0 |
| 30" | | 100.0 | 100.0 | 100.0 |
| 36" | | 100.0 | 100.0 | 100.0 |
| 42" | | 100.0 | 100.0 | 100.0 |
| 48" | | 100.0 | 100.0 | 100.0 |
| 54" | | 94.9 | 100.0 | 100.0 |
| 60" | | 89.2 | 100.0 | 100.0 |
| 66" | | 85.2 | 100.0 | 100.0 |
| 24" | 90" | 100.0 | 100.0 | 100.0 |
| 30" | | 100.0 | 100.0 | 100.0 |
| 36" | | 100.0 | 100.0 | 100.0 |
| 42" | | 91.1 | 100.0 | 100.0 |
| 48" | | 82.0 | 100.0 | 100.0 |
| 54" | | 75.4 | 98.1 | 100.0 |
| 60" | | 70.4 | 91.3 | 100.0 |
| 24" | 96" | 100.0 | 100.0 | 100.0 |
| 30" | | 99.9 | 100.0 | 100.0 |
| 36" | | 84.8 | 100.0 | 100.0 |
| 42" | | 74.2 | 100.0 | 100.0 |
| 48" | | 66.6 | 93.1 | 100.0 |
| 54" | | 60.9 | 84.8 | 100.0 |
| 60" | | 56.7 | 78.5 | 100.0 |
| 24" | 102" | 100.0 | 100.0 | 100.0 |
| 30" | | 82.9 | 100.0 | 100.0 |
| 36" | | 70.2 | 100.0 | 100.0 |
| 42" | | 61.3 | 91.6 | 100.0 |
| 48" | | 54.8 | 81.7 | 100.0 |
| 54" | | 50.0 | 74.1 | 100.0 |
| 24" | 108" | 86.1 | 100.0 | 100.0 |
| 30" | | 69.6 | 100.0 | 100.0 |
| 36" | | 58.8 | 93.5 | 100.0 |
| 42" | | 51.2 | 81.2 | 100.0 |
| 48" | | 45.7 | 72.2 | 99.9 |
| 24" | 114" | 73.0 | 100.0 | 100.0 |
| 30" | | 59.0 | 93.8 | 100.0 |
| 36" | | 49.8 | 79.1 | 100.0 |
| 42" | | 43.3 | 68.8 | 100.0 |
| 48" | | 38.5 | 61.3 | 89.0 |
| 24" | 120" | 62.5 | 99.4 | 100.0 |
| 30" | | 50.4 | 80.2 | 100.0 |
| 36" | | 42.5 | 67.6 | 100.0 |
| 42" | | 36.9 | 58.7 | 90.1 |
| 48" | | 32.8 | 52.2 | 79.9 |

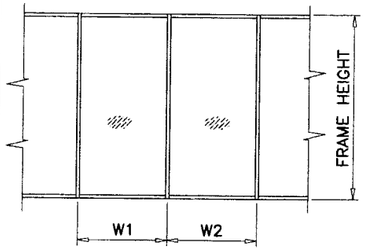


$$\text{WIDTH (W)} = \frac{W1 + W2}{2}$$

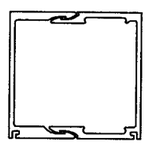

WITHOUT REINFORCING

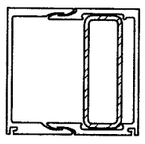

LIGHT REINFORCING

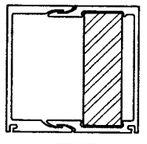

HEAVY REINFORCING

## MULLION LOAD CAPACITY – PSF
WITH INTERMEDIATE HORIZONTALS OR MULLION WITH DOORS

| NOMINAL DIMS. | | WITHOUT REINF. | LIGHT REINF. | HEAVY REINF. |
|---|---|---|---|---|
| WIDTH (W) | FRAME HEIGHT | EXT. (+) INT. (–) | EXT. (+) INT. (–) | EXT. (+) INT. (–) |
| 24" | 78" | 100.0 | 100.0 | 100.0 |
| 30" | | 100.0 | 100.0 | 100.0 |
| 36" | | 100.0 | 100.0 | 100.0 |
| 42" | | 100.0 | 100.0 | 100.0 |
| 48" | | 100.0 | 100.0 | 100.0 |
| 54" | | 99.7 | 100.0 | 100.0 |
| 60" | | 89.8 | 100.0 | 100.0 |
| 66" | | 81.6 | 94.2 | 100.0 |
| 72" | | 74.8 | 86.4 | 100.0 |
| 24" | 84" | 100.0 | 100.0 | 100.0 |
| 30" | | 100.0 | 100.0 | 100.0 |
| 36" | | 100.0 | 100.0 | 100.0 |
| 42" | | 100.0 | 100.0 | 100.0 |
| 48" | | 89.8 | 100.0 | 100.0 |
| 54" | | 79.9 | 99.3 | 100.0 |
| 60" | | 71.9 | 89.4 | 100.0 |
| 66" | | 65.3 | 81.3 | 100.0 |
| 24" | 90" | 100.0 | 100.0 | 100.0 |
| 30" | | 100.0 | 100.0 | 100.0 |
| 36" | | 97.4 | 100.0 | 100.0 |
| 42" | | 83.5 | 100.0 | 100.0 |
| 48" | | 73.0 | 97.3 | 100.0 |
| 54" | | 64.9 | 86.5 | 100.0 |
| 60" | | 58.4 | 77.9 | 100.0 |
| 24" | 96" | 100.0 | 100.0 | 100.0 |
| 30" | | 96.3 | 100.0 | 100.0 |
| 36" | | 80.2 | 100.0 | 100.0 |
| 42" | | 68.8 | 97.8 | 100.0 |
| 48" | | 60.2 | 85.5 | 100.0 |
| 54" | | 53.5 | 76.0 | 100.0 |
| 60" | | 48.1 | 68.4 | 94.7 |
| 24" | 102" | 100.0 | 100.0 | 100.0 |
| 30" | | 80.3 | 100.0 | 100.0 |
| 36" | | 66.9 | 100.0 | 100.0 |
| 42" | | 57.3 | 86.6 | 100.0 |
| 48" | | 50.2 | 75.8 | 100.0 |
| 54" | | 44.6 | 67.4 | 93.2 |
| 24" | 108" | 84.5 | 100.0 | 100.0 |
| 30" | | 67.6 | 100.0 | 100.0 |
| 36" | | 56.4 | 89.6 | 100.0 |
| 42" | | 48.3 | 76.8 | 100.0 |
| 48" | | 42.3 | 67.2 | 93.5 |
| 24" | 114" | 71.9 | 100.0 | 100.0 |
| 30" | | 57.5 | 91.4 | 100.0 |
| 36" | | 47.9 | 76.2 | 100.0 |
| 42" | | 41.1 | 65.3 | 95.9 |
| 48" | | 35.9 | 57.2 | 83.9 |
| 24" | 120" | 61.6 | 98.0 | 100.0 |
| 30" | | 49.3 | 78.4 | 100.0 |
| 36" | | 41.1 | 65.3 | 100.0 |
| 42" | | 35.2 | 56.0 | 86.6 |
| 48" | | 30.8 | 49.0 | 75.7 |

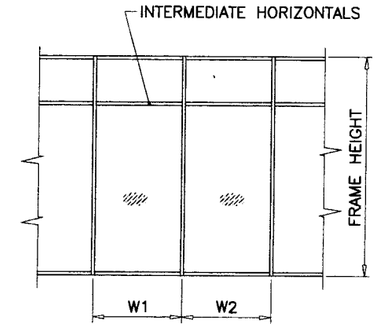


$$\text{WIDTH (W)} = \frac{W1 + W2}{2}$$

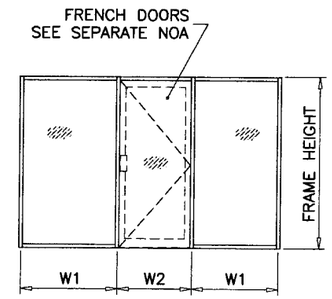


$$\text{WIDTH (W)} = \frac{W1 + W2}{2}$$

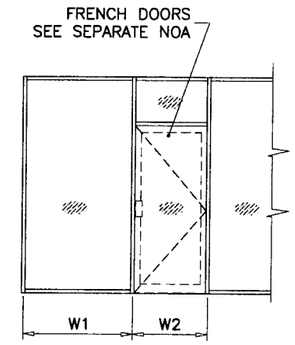


$$\text{WIDTH (W)} = \frac{W1 + W2}{2}$$

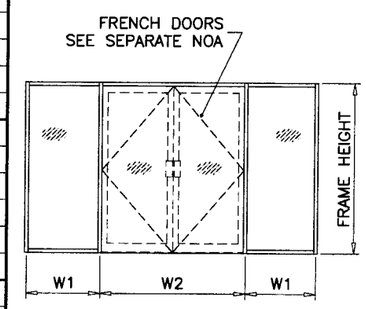


$$\text{WIDTH (W)} = \frac{W1}{2} + \frac{W2}{4}$$

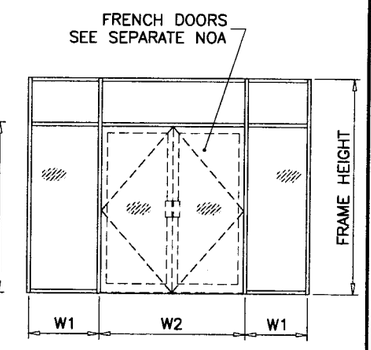


$$\text{WIDTH (W)} = \frac{W1 + W2}{2}$$

Engr: DR. HUMAYOUN FAROOQ
STRUCTURES
FLA. PE # 16557
C.A.N. 3538
MAY 1 8 2006

Approved as complying with the Florida Building Code
Date 06/22/06
NOA# 06-0719.10
Miami-Dade Product Control Division
By


AL-FAROOQ CORPORATION
ENGINEERS, PLANNERS & PRODUCT DESIGN
1235 SW 87 AVE
MIAMI, FLORIDA 33174
TEL. (305) 264-8100 FAX. (305) 262-6978
STORE\W05-31CTC


PRO-TECH 45SG ALUM WINDOW WALL SYSTEM (L.M.I.)

CRAWFORD TRACEY CORPORATION
3301 SW 13TH DRIVE
DEERFIELD BEACH, FL. 33442-8101
TEL. (954) 698-6888 FAX. (954) 698-6889

revisions:

| no | date | by | description |
|---|---|---|---|

date: 06-24-05
scale:
dr. by: HAMID
chk. by:

drawing no.
W05-31

sheet 3 of 8

| ANCHOR LOAD CAPACITY – PSF EXT.(+) & INT.(–) | | | | | |
|---|---|---|---|---|---|
| NOMINAL DIMS. | | ANCHORS TYPE 'A' | | ANCHORS TYPE 'B' | |
| WIDTH (W) | FRAME HEIGHT | A2 | A3 | B1 | B2 |
| 24" | 78" | 100.0 | 100.0 | 100.0 | 100.0 |
| 30" | | 100.0 | 100.0 | 100.0 | 100.0 |
| 36" | | 100.0 | 100.0 | 100.0 | 100.0 |
| 42" | | 100.0 | 100.0 | 100.0 | 100.0 |
| 48" | | 100.0 | 100.0 | 100.0 | 100.0 |
| 54" | | 98.5 | 100.0 | 100.0 | 100.0 |
| 60" | | 98.5 | 100.0 | 100.0 | 100.0 |
| 66" | | 94.0 | 100.0 | 100.0 | 100.0 |
| 72" | | 94.0 | 100.0 | 100.0 | 100.0 |
| 24" | 84" | 100.0 | 100.0 | 100.0 | 100.0 |
| 30" | | 100.0 | 100.0 | 100.0 | 100.0 |
| 36" | | 100.0 | 100.0 | 100.0 | 100.0 |
| 42" | | 100.0 | 100.0 | 100.0 | 100.0 |
| 48" | | 100.0 | 100.0 | 100.0 | 100.0 |
| 54" | | 91.4 | 100.0 | 100.0 | 100.0 |
| 60" | | 91.4 | 100.0 | 100.0 | 100.0 |
| 66" | | 87.3 | 100.0 | 100.0 | 100.0 |
| 24" | 90" | 100.0 | 100.0 | 100.0 | 100.0 |
| 30" | | 100.0 | 100.0 | 100.0 | 100.0 |
| 36" | | 100.0 | 100.0 | 100.0 | 100.0 |
| 42" | | 100.0 | 100.0 | 100.0 | 100.0 |
| 48" | | 96.0 | 100.0 | 100.0 | 100.0 |
| 54" | | 85.3 | 100.0 | 100.0 | 100.0 |
| 60" | | 85.3 | 100.0 | 100.0 | 100.0 |
| 24" | 96" | 100.0 | 100.0 | 100.0 | 100.0 |
| 30" | | 100.0 | 100.0 | 100.0 | 100.0 |
| 36" | | 100.0 | 100.0 | 100.0 | 100.0 |
| 42" | | 100.0 | 100.0 | 100.0 | 100.0 |
| 48" | | 90.0 | 100.0 | 98.8 | 100.0 |
| 54" | | 80.0 | 100.0 | 98.8 | 100.0 |
| 60" | | 80.0 | 96.0 | 98.8 | 100.0 |
| 24" | 102" | 100.0 | 100.0 | 100.0 | 100.0 |
| 30" | | 100.0 | 100.0 | 100.0 | 100.0 |
| 36" | | 94.1 | 100.0 | 100.0 | 100.0 |
| 42" | | 94.1 | 100.0 | 100.0 | 100.0 |
| 48" | | 84.7 | 100.0 | 92.9 | 100.0 |
| 54" | | 75.3 | 100.0 | 92.9 | 100.0 |
| 24" | 108" | 100.0 | 100.0 | 100.0 | 100.0 |
| 30" | | 100.0 | 100.0 | 100.0 | 100.0 |
| 36" | | 88.9 | 100.0 | 100.0 | 100.0 |
| 42" | | 88.9 | 100.0 | 100.0 | 100.0 |
| 48" | | 80.0 | 100.0 | 87.8 | 100.0 |
| 24" | 114" | 100.0 | 100.0 | 100.0 | 100.0 |
| 30" | | 100.0 | 100.0 | 99.8 | 100.0 |
| 36" | | 84.2 | 100.0 | 99.8 | 100.0 |
| 42" | | 84.2 | 100.0 | 95.0 | 100.0 |
| 48" | | 75.8 | 100.0 | 83.2 | 100.0 |
| 24" | 120" | 96.0 | 100.0 | 100.0 | 100.0 |
| 30" | | 96.0 | 100.0 | 94.8 | 100.0 |
| 36" | | 80.0 | 100.0 | 94.8 | 100.0 |
| 42" | | 80.0 | 96.0 | 90.3 | 100.0 |
| 48" | | 72.0 | 96.0 | 79.0 | 100.0 |

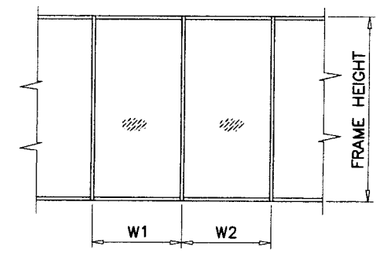


$$\text{WIDTH (W)} = \frac{W1 + W2}{2}$$

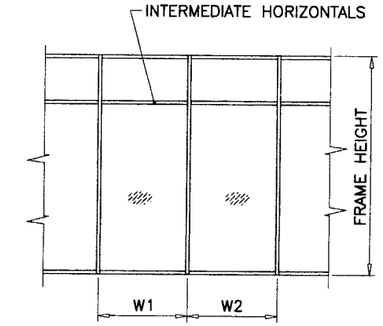


$$\text{WIDTH (W)} = \frac{W1 + W2}{2}$$

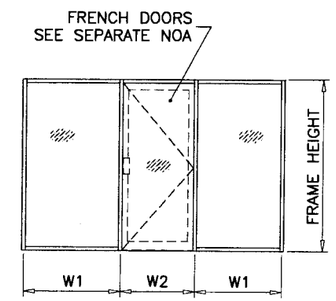


$$\text{WIDTH (W)} = \frac{W1 + W2}{2}$$

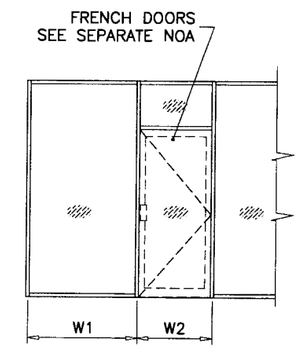


$$\text{WIDTH (W)} = \frac{W1 + W2}{2}$$

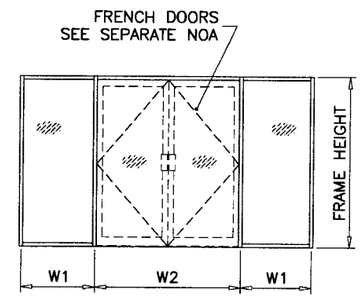


$$\text{WIDTH (W)} = \frac{W1}{2} + \frac{W2}{4}$$

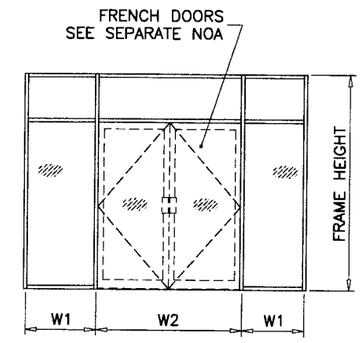


$$\text{WIDTH (W)} = \frac{W1 + W2}{2}$$

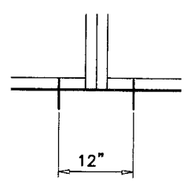


B1

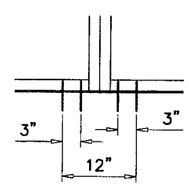


A2, B2

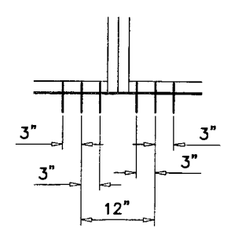


A3

ANCHORS TYPES: SEE SHEET 5 FOR DESCRIPTION

A2 = (2) ANCHORS TYPE 'A' AT EACH SIDE OF MULLION
A3 = (3) ANCHORS TYPE 'A' AT EACH SIDE OF MULLION

B1 = (1) ANCHOR TYPE 'B' AT EACH SIDE OF MULLION
B2 = (2) ANCHORS TYPE 'B' AT EACH SIDE OF MULLION

ALL OTHER ANCHORS TO BE SPACED AS PER ELEVATION.

Approved as complying with the Florida Building Code
Date 06/22/06
NOA# 06-0119.10
Miami Dade Product Control Division
By

Engr: DR. HUMAYOUN FAROOQ
STRUCTURES
FLA. PE # 16557
C.A.N. 3538

MAY 18 2006


AL-FAROOQ CORPORATION
ENGINEERS, PLANNERS & PRODUCT DESIGN
1235 SW 87 AVE
MIAMI, FLORIDA 33174
TEL. (305) 264-8100 FAX. (305) 262-6978
STORE\W05-31CTC


PRO-TECH 45SG ALUM WINDOW WALL SYSTEM (L.M.I.)


CRAWFORD TRACEY CORPORATION
3301 SW 13TH DRIVE
DEERFIELD BEACH, FL. 33442-8101
TEL. (954) 698-6888 FAX. (954) 698-6889


revisions:

| no | date | by | description |
|---|---|---|---|

date: 06-24-05
scale: 1/2" = 1"
dr. by: HAMID
chk. by:

drawing no.
W05-31

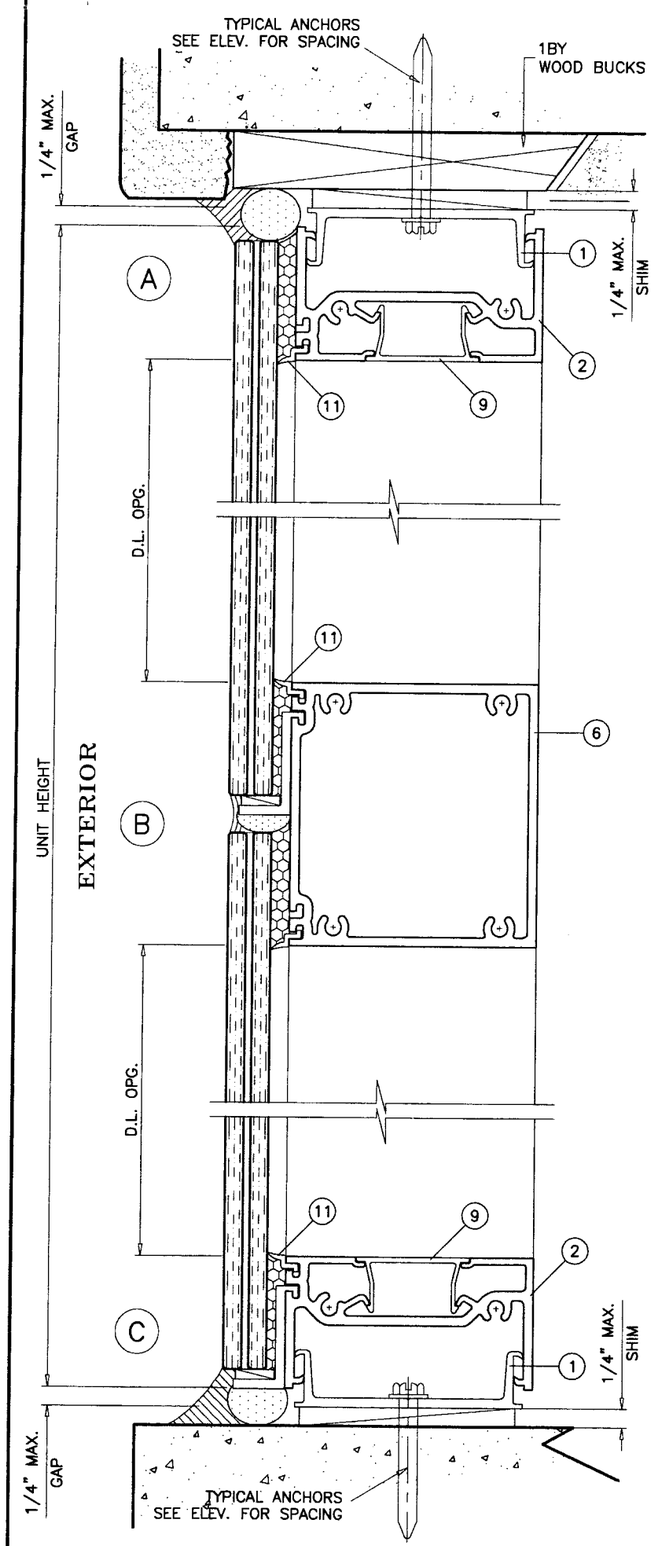


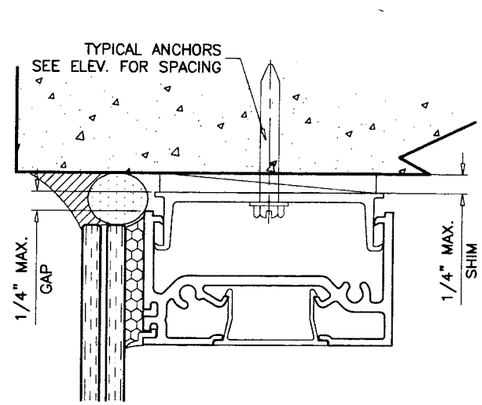


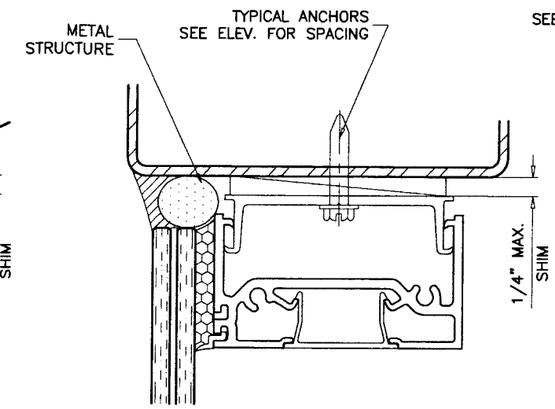


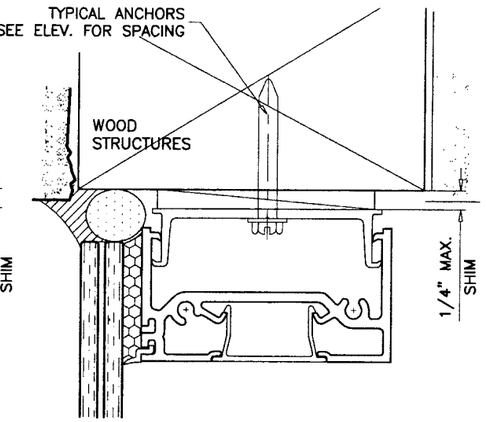


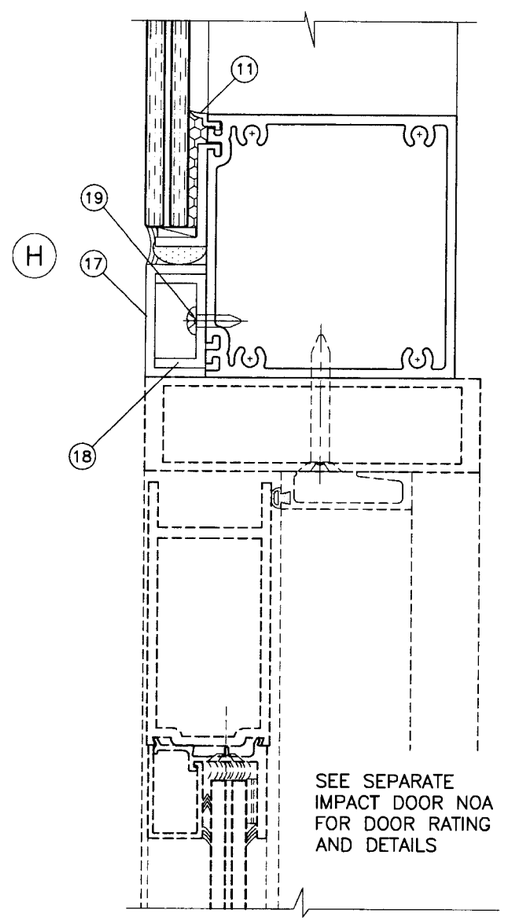


WOOD BUCKS AND METAL STRUCTURES NOT BY CRAWFORD TRACEY MUST SUPPORT LOADS IMPOSED BY GLAZING SYSTEM AND TRANSFER THEM TO THE BUILDING STRUCTURE.

## TYPICAL ANCHORS: SEE ELEV. FOR SPACING

TYPE 'A'– 1/4" TAPCONS
INTO 2BY WOOD BUCKS OR WOOD STRUCTURES
1–1/2" MIN. PENETRATION INTO WOOD

THRU 1BY WOOD BUCKS INTO
3000 PSI MIN. CONC. OR C–90 GROUT FILLED BLOCK
1–1/4" MIN. EMBED INTO CONC. OR MASONRY

TYPE 'B'– 1/4" TAPCONS
DIRECTLY INTO CONC. OR MASONRY
3000 PSI MIN. CONC. OR C–90 GROUT FILLED BLOCK
1–1/4" MIN. EMBED INTO CONC. OR MASONRY

1/4" TEKS OR SELF DRILLING SCREWS
INTO METAL STRUCTURES
STEEL : 12 GA. MIN. (Fy = 36 KSI MIN.)
ALUMINUM : 1/8" THK. MIN. (6063–T5 MIN.)
(STEEL IN CONTACT WITH ALUMINUM TO BE PLATED OR PAINTED)

TYPICAL EDGE DISTANCE
INTO CONCRETE AND MASONRY = 3" MIN.
INTO WOOD STRUCTURE = 1" MIN.
INTO METAL STRUCTURE = 3/4" MIN.

## SEALANTS:

ALL FRAME JOINTS ON EXTERIOR TO BE SEALED WITH DOW CORNING 795 SILICONE SEALANT.

Approved as complying with the Florida Building Code
Date 06/22/06
NOA# 06-0119.10
Miami-Dade Product Control Division
By

Engr: DR. HUMAYOUN FAROOQ
STRUCTURES
FLA. PE # 18557
C.A.N. 3538
MAY 18 2006

AL-FAROOQ CORPORATION
ENGINEERS, PLANNERS & PRODUCT DESIGN
1235 SW 87 AVE
MIAMI, FLORIDA 33174
TEL. (305) 264-8100 FAX. (305) 262-6978

STORE\W05-31CTC

PRO-TECH 45SG ALUM WINDOW WALL SYSTEM (L.M.I.)

CRAWFORD TRACEY CORPORATION
3301 SW 13TH DRIVE
DEERFIELD BEACH, FL. 33442-8101
TEL. (954) 698-6888 FAX. (954) 698-6889

revisions:

| no | date | by | description |
|---|---|---|---|
| | | | |

date: 06-24-05
scale: 1/2" = 1"
dr. by: HAMID
chk. by:

drawing no.
W05-31

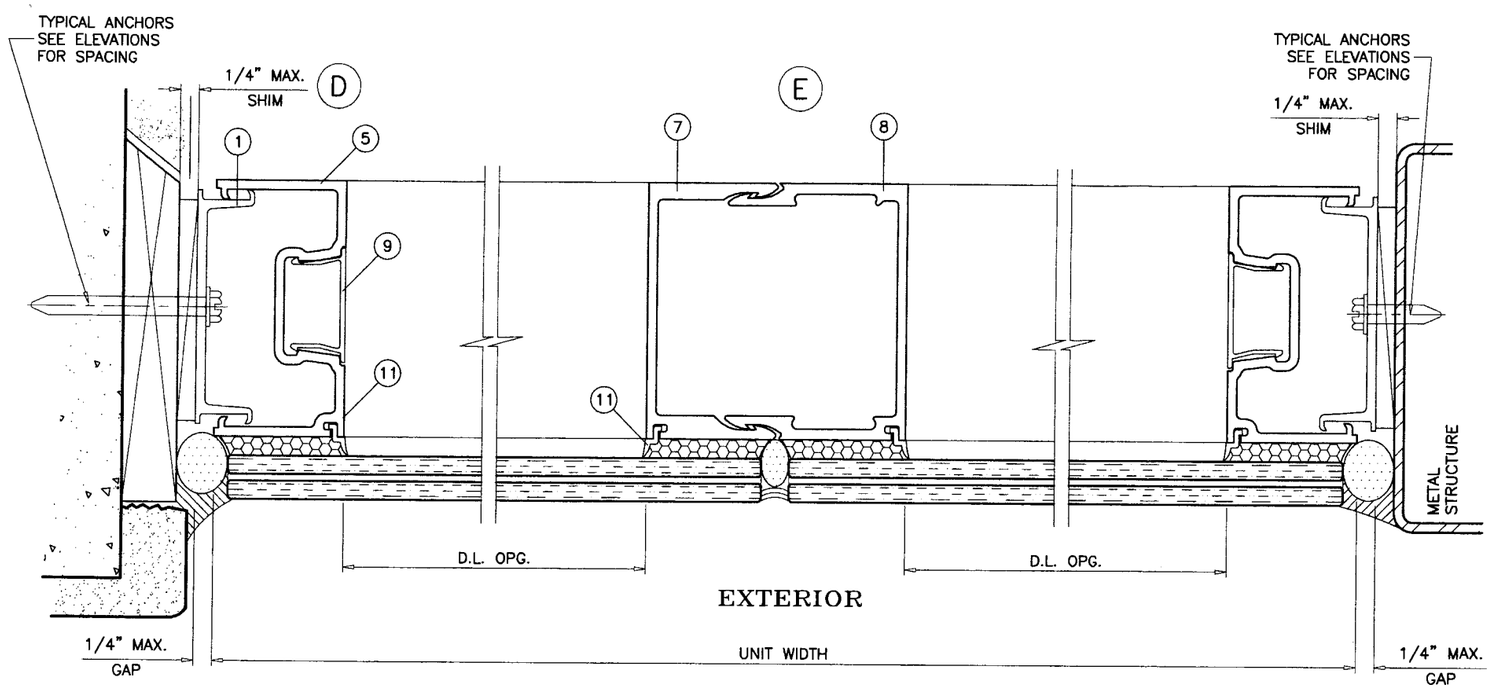


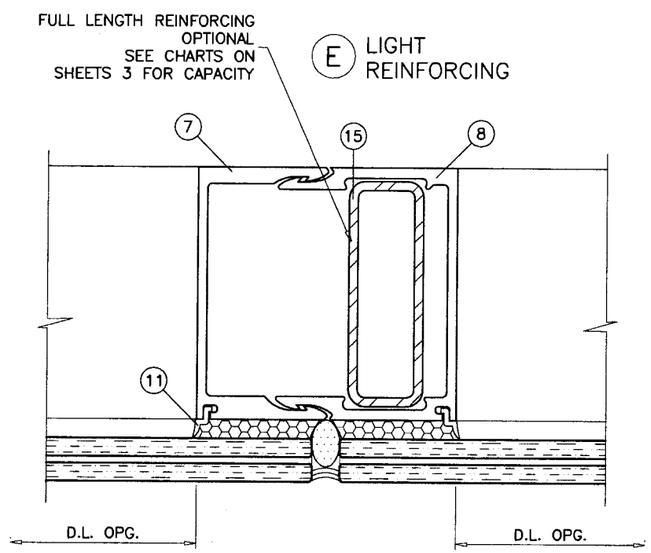


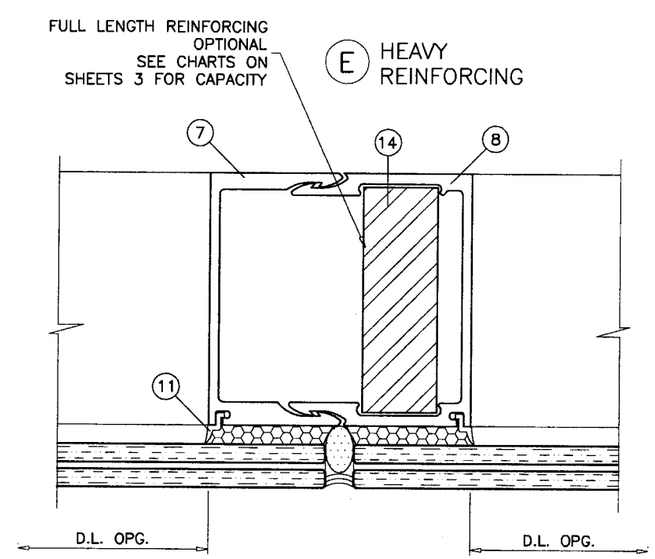


Approved as complying with the
Florida Building Code
Date 06/22/06
NOA# 06-0119.10
Miami-Dade Product Control
Division
By

Engr: DR. HUMAYOUN FAROOQ
STRUCTURES
FLA. PE # 16557
C.A.N. 3538

MAY 18 2006


AL-FAROOQ CORPORATION
ENGINEERS, PLANNERS & PRODUCT DESIGN
1235 SW 87 AVE
MIAMI, FLORIDA 33174
TEL. (305) 264-8100 FAX. (305) 262-6978
STORE\W05-31CTC


PRO-TECH 455G ALUM WINDOW WALL SYSTEM (L.M.I.)


CRAWFORD TRACEY CORPORATION
3301 SW 13TH DRIVE
DEERFIELD BEACH, FL. 33442-8101
TEL. (954) 698-6888 FAX. (954) 698-6889


revisions:

| no | date | by | description |
|---|---|---|---|
| | | | |

date: 06-24-05
scale: 1/2" = 1"
dr. by: HAMID
chk. by:

drawing no.
W05-31

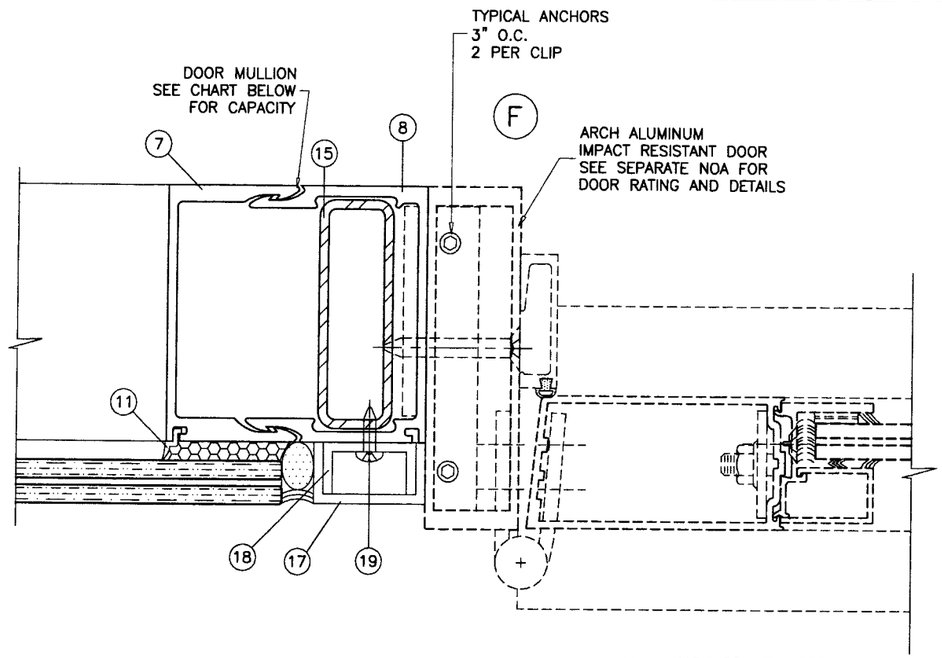


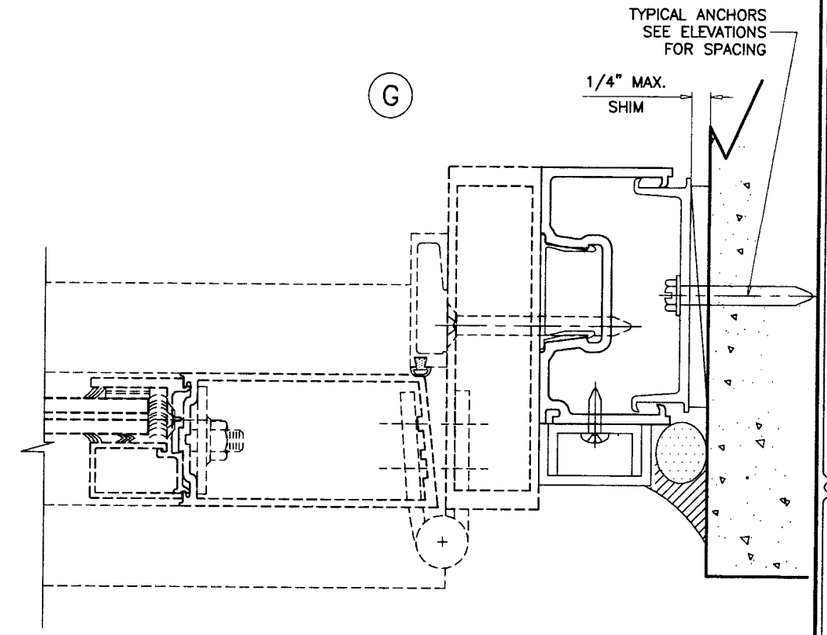


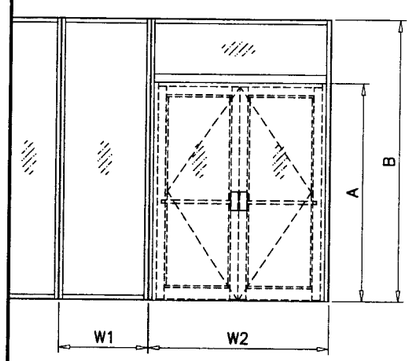


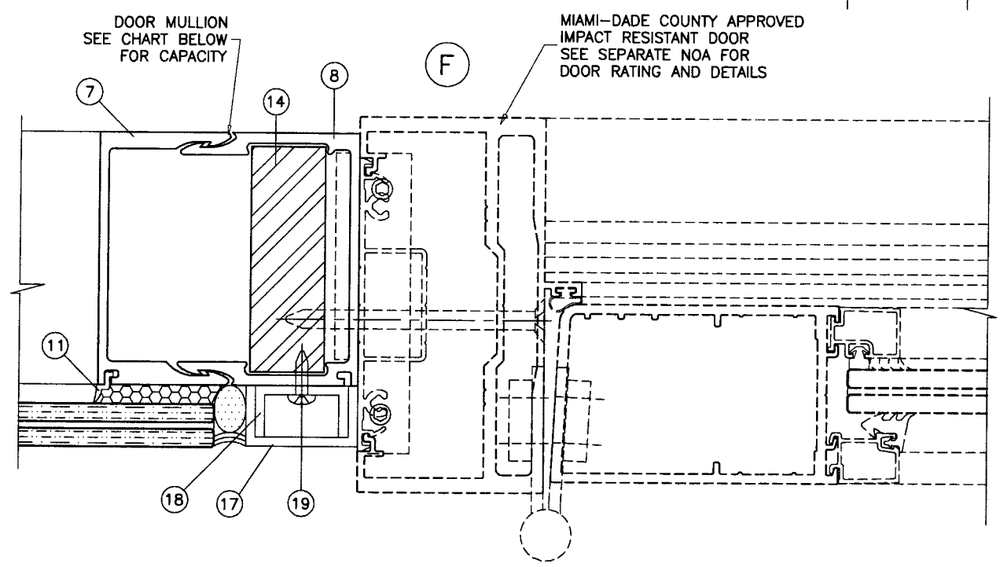


| DOOR MULLION DESIGN LOAD CAPACITY - PSF | | | | |
|---|---|---|---|---|
| FRAME HEIGHT-B INCHES MAX. | DOOR HEIGHT-A INCHES MAX. | WIDTH-W1 INCHES MAX. | WIDTH-W2 INCHES MAX. | EXT. (+) INT. (-) |
| 120 | 96 | 36 | 72 | 70.1 |
| | 90 | | | 66.1 |
| | 84 | | | 62.0 |
| | 80 | | | 59.4 |
| 114 | 96 | 42 | 72 | 80.0 |
| | 90 | | | 68.5 |
| 108 | 96 | 48 | 72 | 80.0 |
| | 90 | | | 80.0 |
| 102 | 96 | 54 | 72 | 80.0 |
| | 90 | | | 80.0 |

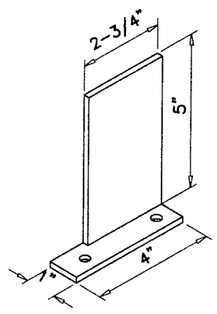


DOOR MULLION INSTALLATION CLIP
1 X 5 X 3/16" ALUM ANGLE

Approved as complying with the Florida Building Code
Date 06/22/06
NOA# 06-0119.10
Miami-Dade Product Control Division
By

Engr: DR. HUMAYOUN FAROOQ
STRUCTURES
FLA. PE # 16557
C.A.N. 3538

MAY 18 2006

AL-FAROOQ CORPORATION
ENGINEERS, PLANNERS & PRODUCT DESIGN
1235 SW 87 AVE
MIAMI, FLORIDA 33174
TEL. (305) 264-8100 FAX. (305) 262-6978

STORE\W05-31CTC

PRO-TECH 455G ALUM WINDOW WALL SYSTEM (L.M.I.)

CRAWFORD TRACEY CORPORATION
3301 SW 13TH DRIVE
DEERFIELD BEACH, FL. 33442-8101
TEL. (954) 698-6888 FAX. (954) 698-6889

revisions:

| no | date | by | description |
|---|---|---|---|

date: 06-24-05
scale: 1/2" = 1"
dr. by: HAMID
chk. by:

drawing no.
W05-31

sheet 7 of 8

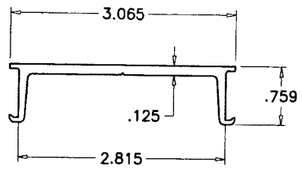


(1) SUB BUCK

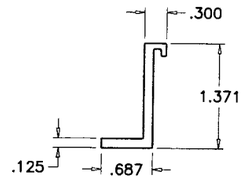


(10) SETTING PIECE

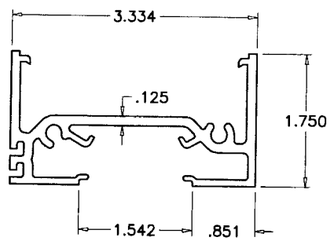


(2) FRAME HEAD/SILL

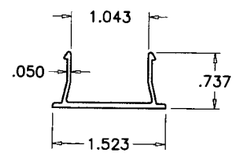


(9) SNAP-IN COVER

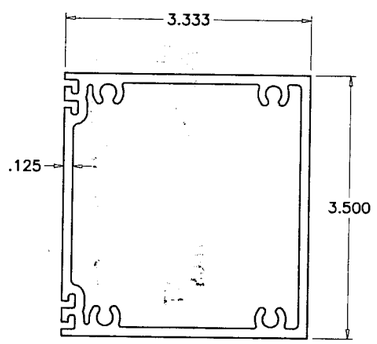


(6) FRAME HORIZONTAL

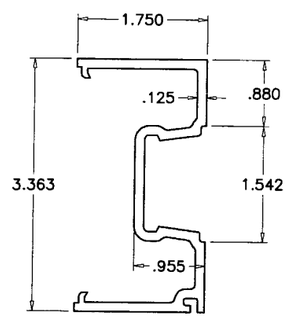


(5) FRAME JAMB

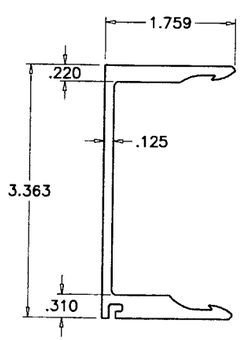


(7) FEMALE MULLION

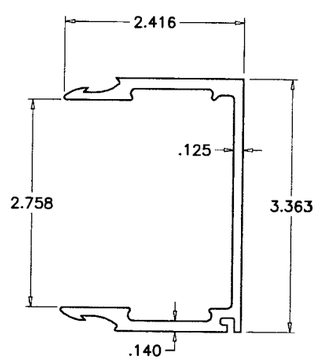


(8) MALE MULLION

| ITEM NO. | PART NUMBER | QUANTITY | DESCRIPTION | MATERIAL | MANF./SUPPLIER/REMARKS |
|---|---|---|---|---|---|
| 1 | B44B001 | AS REQD. | SUB BUCK | 6105-T5 | – |
| 2 | 144P176 | AS REQD. | FRAME HEAD/SILL | 6063-T6 | – |
| 3 | – | – | – | – | – |
| 4 | – | – | – | – | – |
| 5 | 144J176 | AS REQD. | FRAME JAMB | 6063-T6 | – |
| 6 | 144H342 | AS REQD. | HORIZONTAL | 6063-T6 | – |
| 7 | 144M114 | AS REQD. | FEMALE MULLION | 6063-T6 | – |
| 8 | 144M113 | AS REQD. | MALE MULLION | 6063-T6 | – |
| 9 | T44U119 | AS REQD. | SNAP-IN COVER | 6063-T6 | – |
| 10 | 170X115 | AS REQD. | 4" LONG SETTING PIECE | 6105-T5 | AT 1/4 POINTS |
| 11 | #2 | AS REQD. | INTERIOR GLAZING GASKET | POLYPROPYLENE | – |
| 12 | – | – | – | – | – |
| 13 | 983 | – | GLAZING COMPOUND | SILICONE | DOW CORNING |
| 14 | – | AS REQD. | STEEL BAR, FULL LENGTH | STEEL | 1" X 3" |
| 15 | – | AS REQD. | REINFORCING TUBE, FULL LENGTH | STEEL | 1 X 3 X 11 GA. |
| 16 | #14 X 1-1/4" | AS REQD. | FRAME ASSEMBLY SCREWS | ST. STEEL | P.H. SMS |
| 17 | – | AS REQD. | FILLER CHANNEL | ALUMINUM | 13/16 X 1-1/2 X 13/16 X 1/8" |
| 18 | – | AS REQD. | FILLER CHANNEL | ALUMINUM | 11/16 X 1-1/4 X 11/16 X 1/8" |
| 19 | #10 X 1" | AS REQD. | FILLER CHANNEL SCREWS | AT. STEEL | AT 14" O.C. |

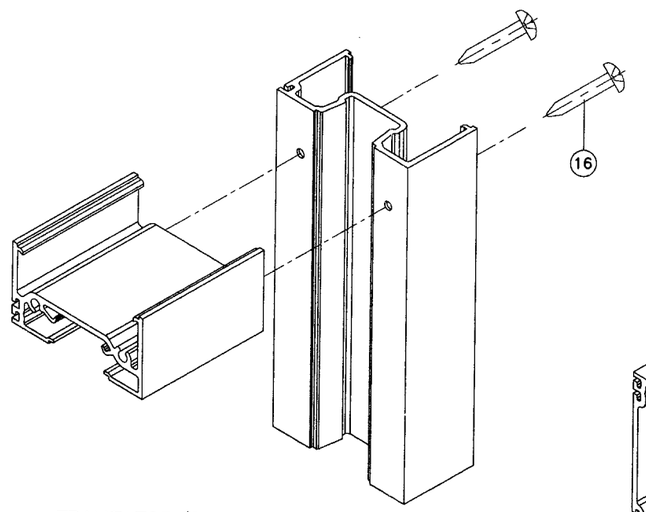


FRAME TOP/BOTTOM CORNER

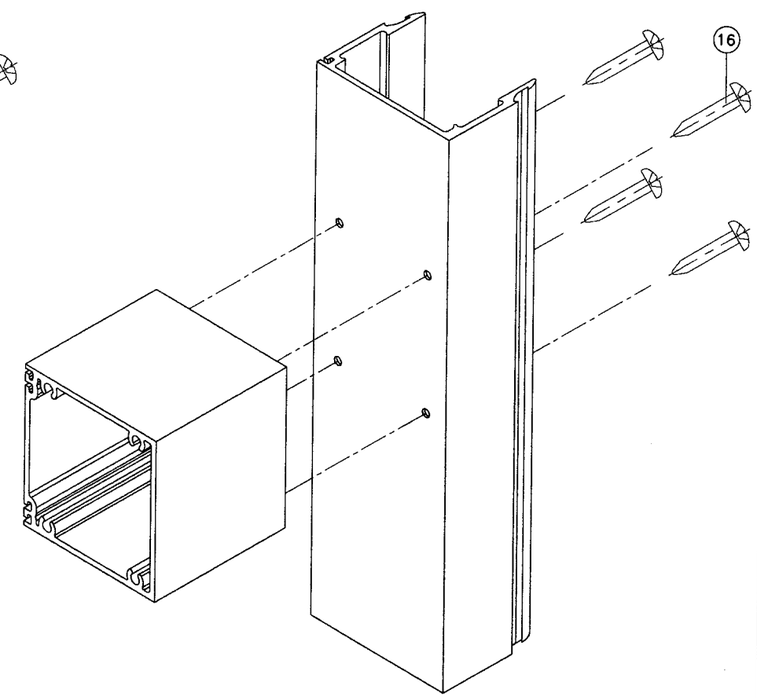


FRAME HORIZONTAL CORNER

Approved as complying with the Florida Building Code
Date 06/22/06
NOA# 06-0119.10
Miami-Dade Product Control Division
By

Engr: DR. HUMAYOUN FAROOQ
STRUCTURES
FLA. PE # 16557
C.A.N. 3538

MAY 18 2006


AL-FAROOQ CORPORATION
ENGINEERS, PLANNERS & PRODUCT DESIGN
1235 SW 87 AVE
MIAMI, FLORIDA 33174
TEL. (305) 264-8100 FAX. (305) 262-6978


STORE\W05-31CTC

PRO-TECH 45SG ALUM WINDOW WALL SYSTEM (L.M.I.)

CRAWFORD TRACEY CORPORATION
3301 SW 13TH DRIVE
DEERFIELD BEACH, FL. 33442-8101
TEL. (954) 698-6888 FAX. (954) 698-6889

revisions:

| no | date | by | description |
|---|---|---|---|
| | | | |

date: 06-24-05
scale: 1/2" = 1"
dr. by: HAMID
chk. by:

drawing no.
W05-31

sheet 8 of 8