MIAMI-DADE COUNTY
BUILDING CODE COMPLIANCE OFFICE (BCCO)
PRODUCT CONTROL DIVISION

MIAMI-DADE COUNTY, FLORIDA
METRO-DADE FLAGLER BUILDING

140 WEST FLAGLER STREET, SUITE 1603
MIAMI, FLORIDA 33130-1563
(305) 375-2901 FAX (305) 375-2908
www.buildingcodeonline.com

**NOTICE OF ACCEPTANCE (NOA)**

**Mossbrooks Enterprises, Inc.**
**291 Lance Lane**
**Key Largo, Florida 33037**

**SCOPE:**
This NOA is being issued under the applicable rules and regulations governing the use of construction materials. The documentation submitted has been reviewed by Miami-Dade County Product Control Division and accepted by the Board of Rules and Appeals (BORA) to be used in Miami Dade County and other areas where allowed by the Authority Having Jurisdiction (AHJ).

This NOA shall not be valid after the expiration date stated below. The Miami-Dade County Product Control Division (In Miami Dade County) and/or the AHJ (in areas other than Miami Dade County) reserve the right to have this product or material tested for quality assurance purposes. If this product or material fails to perform in the accepted manner, the manufacturer will incur the expense of such testing and the AHJ may immediately revoke, modify, or suspend the use of such product or material within their jurisdiction. BORA reserves the right to revoke this acceptance, if it is determined by Miami-Dade County Product Control Division that this product or material fails to meet the requirements of the applicable building code.

This product is approved as described herein, and has been designed to comply with the High Velocity Hurricane Zone of the Florida Building Code.

**DESCRIPTION: HT-100 / Aluminum Accordion Shutter**

**APPROVAL DOCUMENT:** Drawing No. 05-573, titled "HT-100 Aluminum Accordion Shutter", sheets 1 through 7 of 7, prepared by Thornton-Tomasetti Group, dated September 14, 2005, last revision #0 dated September 14, 2005, signed and sealed by V. J. Knezevich, P.E., bearing the Miami-Dade County Product Control Revision stamp with the Notice of Acceptance number and revision date by Miami-Dade County Product Control Division.

**MISSILE IMPACT RATING: Large and Small Missile Impact**

**LABELING:** Each unit shall bear a permanent label with the manufacturer's name or logo, city, state and the following statement: "Miami-Dade County Product Control Approved", unless otherwise noted herein.

**RENEWAL** of this NOA shall be considered after a renewal application has been filed and there has been no change in the applicable building code negatively affecting the performance of this product.

**TERMINATION** of this NOA will occur after the expiration date or if there has been a revision or change in the materials, use, and/or manufacture of the product or process. Misuse of this NOA as an endorsement of any product, for sales, advertising or any other purposes shall automatically terminate this NOA. Failure to comply with any section of this NOA shall be cause for termination and removal of NOA.

**ADVERTISEMENT:** The NOA number preceded by the words Miami-Dade County, Florida, and followed by the expiration date may be displayed in advertising literature. If any portion of the NOA is displayed, then it shall be done in its entirety.

**INSPECTION:** A copy of this entire NOA shall be provided to the user by the manufacturer or its distributors and shall be available for inspection at the job site at the request of the Building Official.

This NOA **revises NOA # 05-0427.03** and consists of this page 1, evidence submitted pages E-1 and E-2 as well as approval document mentioned above.

The submitted documentation was reviewed by **Helmy A. Makar, P.E.**

Helmy A. Makar
02/16/2006

PRODUCT CONTROL ACCEPTED

**NOA No 06-0124.01**
**Expiration Date: 05/26/2010**
**Approval Date: 02/16/2006**

**Mossbrooks Enterprises, Inc.**

## NOTICE OF ACCEPTANCE: EVIDENCE SUBMITTED

**1. EVIDENCE SUBMITTED UNDER PREVIOUS APPROVAL #05-0427.03**

**A. DRAWINGS**

1. *Drawing No. 05-338, titled "HT-100 Aluminum Accordion Shutter", sheets 1 through 7 of 7, prepared by Thornton-Tomasetti Group, dated 10/17/02, last revision #2 dated 12/20/2004, signed and sealed by V. J. Knezevich, P.E.,*

**B. TESTS**

1. *See Association's generic approval under 02-0799.*

**C. CALCULATIONS**

1. *See Association's generic approval under 02-0799.*

**D. QUALITY ASSURANCE**

1. *By Miami-Dade County Building Code Compliance Office.*

**E. MATERIAL CERTIFICATIONS**

1. *See Association's generic approval under 02-0799.*

**F. STATEMENTS**

1. *Statement letter of conformance by Thornton-Tomasetti Group, dated April 14, 2005, signed and sealed by V. J. Knezevich, P.E.*

**2. NEW EVIDENCE SUBMITTED**

**A. DRAWINGS**

1. *Drawing No. 05-573, titled "HT-100 Aluminum Accordion Shutter", sheets 1 through 7 of 7, prepared by Thornton-Tomasetti Group, dated September 14, 2005, last revision #0 dated September 14, 2005, signed and sealed by V. J. Knezevich, P.E.*

**B. TESTS**

1. *See Association's generic approval under 05-0321.*

**C. CALCULATIONS**

1. *See Association's generic approval under 05-0321.*

**D. QUALITY ASSURANCE**

1. *By Miami-Dade County Building Code Compliance Office.*

**E. MATERIAL CERTIFICATIONS**

1. *See Association's generic approval under 05-0321.*

**Helmy A. Makar, P. E.**
**Product Control Examiner**
**NOA No 06-0124.01**
**Expiration Date: 05/26/2010**
**Approval Date: 02/16/2006**

## NOTICE OF ACCEPTANCE: EVIDENCE SUBMITTED

**F. STATEMENTS**

1. *Release letter issued by the Hi-Tech Shutter Group, Inc., dated November 09, 2005, certifying this product to meet the criteria of product tested and approved, and allowing Mossbrooks Enterprises, Inc. to use the test results approved under Miami-Dade County Approval No.05-0321, signed by Mr. Frank Cornelius.*
2. *Acknowledgment letter by Mossbrooks Enterprises, Inc. dated November 14, 2005, signed by Mr. William Mossbrooks.*
3. *Letter by Thornton-Tomasetti Group, dated November 09, 2005, certifying that the drawing (No. 05-573) prepared for Mossbrooks Enterprises, Inc., signed and sealed by Mr. V. J. Knezevich, P.E., is engineering wise identical to Hi-Tech's generic drawing (No.05-509).*

**Helmy A. Makar, P. E.**
**Product Control Examiner**
**NOA No 06-0124.01**
**Expiration Date: 05/26/2010**
**Approval Date: 02/16/2006**

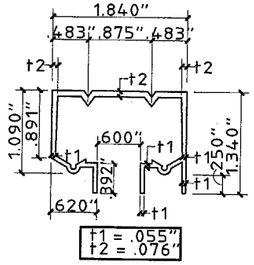


1 HEADER-CLG. MOUNTED
SCALE: HALF SIZE

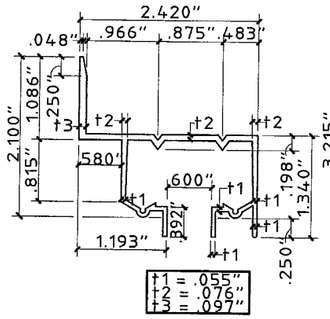


2 HEADER-WALL MOUNTED
SCALE: HALF SIZE

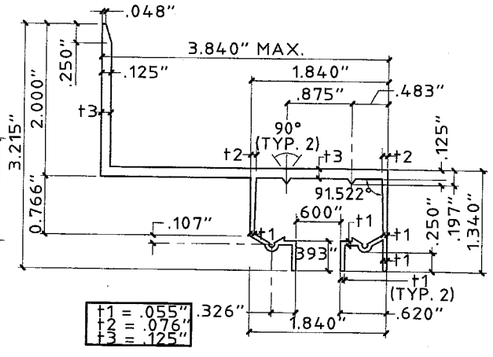


2a BUILD-OUT WALL HEADER
SCALE: HALF SIZE

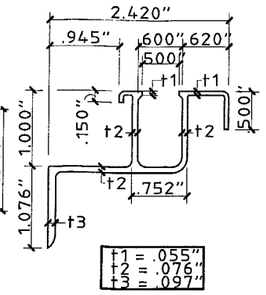


3 SILL-WALL MOUNTED
SCALE: HALF SIZE

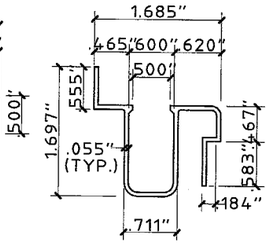


4 ADJ. SILL-TOP
SCALE: HALF SIZE

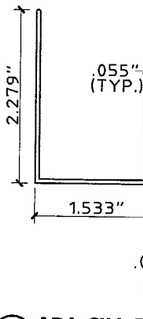


5 ADJ. SILL-BOT.
SCALE: HALF SIZE

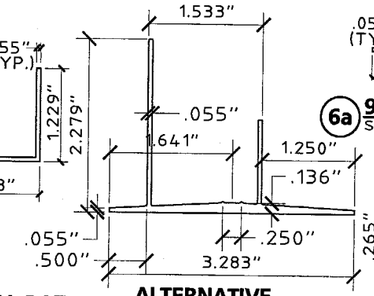


5a ALTERNATIVE ADJ. SILL-BOT.
SCALE: HALF SIZE

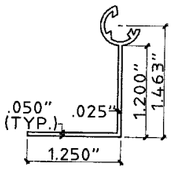


6a 90° END SLAT
SCALE: HALF SIZE

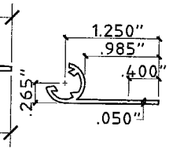


7 FLAT END SLAT
SCALE: HALF SIZE

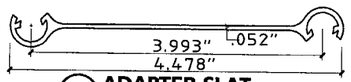


8a ADAPTER SLAT
SCALE: HALF SIZE

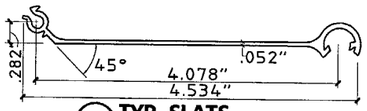


8 TYP. SLATS
SCALE: HALF SIZE

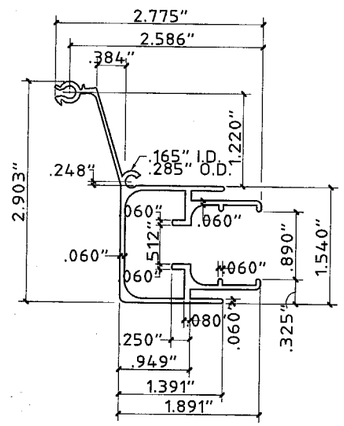


9 CENTER MATE 1
SCALE: HALF SIZE

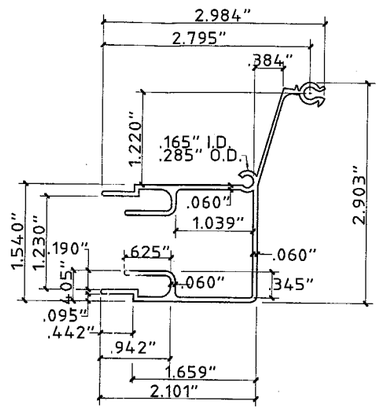


10 CENTER MATE 2
SCALE: HALF SIZE

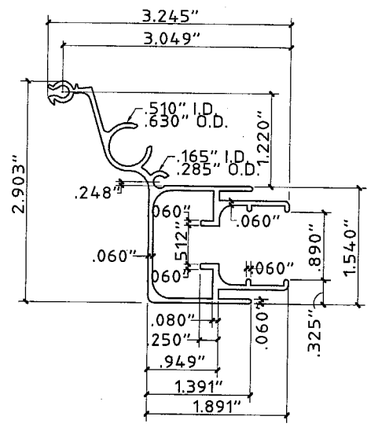


9a CENTER MATE 1 (W/ LOCKING ROD)
SCALE: HALF SIZE

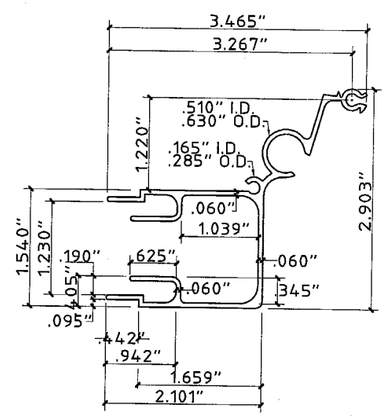


10a CENTER MATE 2 (W/ LOCKING ROD)
SCALE: HALF SIZE

**GENERAL NOTES:**

1. THESE APPROVAL DOCUMENTS REPRESENT A SHUTTER SYSTEM ANALYZED WITH THE PROVISION SET FOR THE ISSUANCE OF A NOTICE OF ACCEPTANCE (NOA) BY MIAMI-DADE COUNTY PRODUCT CONTROL DIVISION FOR THE FLORIDA BUILDING CODE, 2004.
2. TO VERIFY THAT THE ANCHORS AS TESTED, ARE NOT OVERSTRESSED IN THESE APPROVAL DOCUMENTS, NO INCREASE IN ALLOWABLE STRESS WAS USED IN THE FASTENER ANALYSIS.
3. DETERMINE THE POSITIVE AND NEGATIVE DESIGN LOADS TO USE WHEN REFERENCING THESE DOCUMENTS IN ACCORDANCE WITH THE GOVERNING CODE AND GOVERNING WIND VELOCITY. FOR WIND LOAD CALCULATIONS IN ACCORDANCE WITH THE FLORIDA BUILDING CODE 2004 A DIRECTIONALITY FACTOR OF Kd =0.85 SHALL BE USED.
4. THESE APPROVAL DOCUMENTS ARE GENERIC AND DO NOT INCLUDE INFORMATION FOR SITE-SPECIFIC APPLICATION OF THIS SHUTTER SYSTEM.
5. USE OF THESE APPROVAL DOCUMENTS SHALL COMPLY WITH CHAPTER 61G15-23 OF THE FLORIDA ADMINISTRATIVE CODE.
6. THESE APPROVAL DOCUMENTS ARE SUITABLE TO BE APPLIED BY THE CONTRACTOR PROVIDED THE CONTRACTOR DOES NOT DEVIATE FROM THE CONDITIONS DETAILED HEREIN AND THE CONTRACTOR VERIFIES THAT THE EXISTING STRUCTURE DOES NOT DEVIATE IN EITHER FORM OR MATERIAL FROM THE STRUCTURAL SUBSTRATES DETAILED HEREIN.
7. ANY MODIFICATIONS OR ADDITIONS TO THESE APPROVAL DOCUMENTS WILL VOID THE APPROVAL DOCUMENTS.
8. WHEN THE SITE CONDITIONS DEVIATE FROM THESE APPROVAL DOCUMENTS, THE BUILDING OFFICIAL MAY ELECT ONE OF THE FOLLOWING OPTIONS:
   A) REQUIRE THAT SITE SPECIFIC DOCUMENTS BE PREPARED, SIGNED, DATED AND SEALED BY A LICENSED ENGINEER OR REGISTERED ARCHITECT, WHICH DETAIL AND JUSTIFY THE DEVIATION. SAID DOCUMENTS SHALL BE SUBMITTED TO THE PRODUCT ENGINEER FOR REVIEW AS A CONDITION TO THE BUILDING OFFICIAL GRANTING HIS/HER APPROVAL.
   B) REQUIRE THAT A ONE-TIME SITE SPECIFIC APPROVAL BE APPLIED FOR AND SECURED FROM THE MIAMI-DADE COUNTY PRODUCT CONTROL DIVISION.

   WHEN THE SITE CONDITION DEVIATIONS OCCUR WITHIN THE HIGH VELOCITY HURRICANE ZONE AREAS, ONLY OPTION "B" SHALL BE ACCEPTED BY THE BUILDING OFFICIAL.
9. EACH SHUTTER ASSEMBLY SHALL BE PERMANENTLY LABELED AS FOLLOWS:

   **MOSSBROOKS ENTERPRISES INC.**
   **KEY LARGO, FLORIDA**
   **MIAMI-DADE COUNTY PRODUCT APPROVED**
10. ALL SHUTTERS SHALL HAVE A LOCKING MECHANISM AT CENTER OR SIDE CLOSURE WITHIN 18" OF CENTER (VERT.). LOCKING MECHANISM SHALL BE LOCKED TO PROVIDE HURRICANE PROTECTION.
11. STORM SHUTTER EXTRUSIONS SHOWN SHALL BE 6063-T6 ALUMINUM ALLOY, U.O.N.
12. ALL SCREWS AND BOLTS TO BE 2024-T4 ALUMINUM ALLOY, STAINLESS STEEL, OR GALVANIZED STEEL WITH A MINIMUM TENSILE STRENGTH OF 60 K.S.I., U.O.N. POP RIVETS TO BE 3/16"Ø, 5052 ALUM. ALLOY, U.O.N.
13. TOP AND BOTTOM DETAILS MAY BE INTERCHANGED AS FIELD CONDITIONS REQUIRE.
14. FLOOR TRACKS MAY BE REMOVABLE AT NON-STACKING LOCATIONS. USE REMOVABLE ANCHORS SUCH AS POWERS CALK-IN ANCHORS.
15. THIS SHUTTER SYSTEM IS PATENTED WITH THE U.S. PATENT AND TRADEMARK OFFICE, PATENT No. 5,755,270.

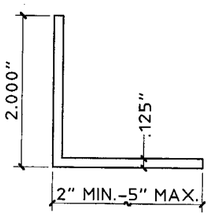


11 ANGLE
SCALE: HALF SIZE

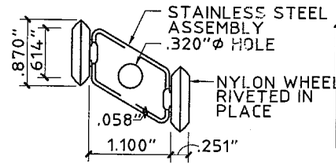


TYP. AT EVERY OTHER INSIDE JOINT AT TOP.

12 ROLLER ASSEMBLY
SCALE: HALF SIZE

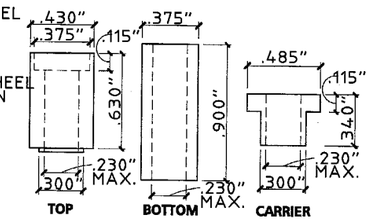


12a BUSHINGS
SCALE: FULL SIZE

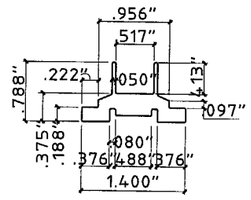


13 INSERT
SCALE: HALF SIZE

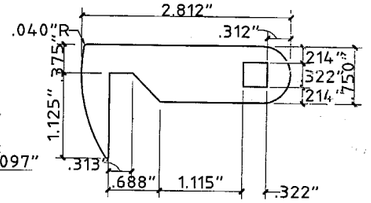


1/8" THICK STAINLESS STEEL

14 LOCKING ARM
SCALE: HALF SIZE

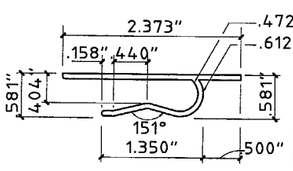


(OPTIONAL)

15 LOCKING CLIP
SCALE: HALF SIZE

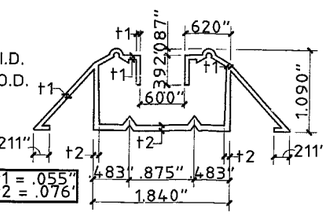


16 WALKOVER SILL FLOOR MOUNTED
SCALE: HALF SIZE

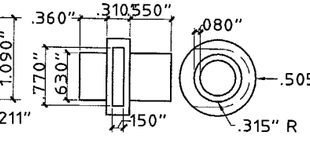


17 LOCKING ARM ALIGNMENT BUSHING (NYLON)
SCALE: HALF SIZE

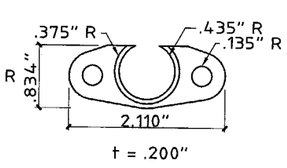


18 INSIDE HANDLE SHIM (NYLON)
SCALE: HALF SIZE

**PRODUCT REVISED**
**as complying with the Florida Building Code**
**Acceptance No. 06-0124.01**
**Expiration Date 05/26/2010**
**By** [signature]
**Miami Dade Product Control Division**


Thornton-Tomasetti Group
330 N. Andrews Ave., Suite 450 • Ft. Lauderdale, FL 33301
Tel. (954) 522-3690 • Fax (954) 522-3691 • COA # 7519
Website: www.TheTTGroup.com



Copyright © 2005 Thornton-Tomasetti Group, Inc.
HT100 LICENSED BY HI-TECH SHUTTER GROUP, INC.


HT-100 ALUMINUM ACCORDION SHUTTER

MOSSBROOKS ENTERPRISES INC.
291 LANCE LANE
KEY LARGO, FL 33037
PHONE: 305-453-9512
FAX: 305-453-0740

V.J. Knezevich
Professional Engineer
FL License No.: PE0010983

NOV 09 2005

revisions

| no | date | by | description |
|---|---|---|---|
| 0 | 09/14/05 | VJK | PREVIOUSLY DRAWING NO. 02-458 |

HTSG I.D. # 051109055509D

| | |
|---|---|
| date 09/14/2005 | |
| scale AS NOTED | drawn by MCR |
| design by VJK | checked by VJK |
| drawing no. 05-573 | |
| sheet 1 of 7 | |


Print Information: P:\FL1\KA\CADD\Associations\Hi-Tech\Mossbrooks\05-573\R0-sub\05-573-01.dwg MCantu 11/09/2005 11:56:03am 11/09/05 11:54

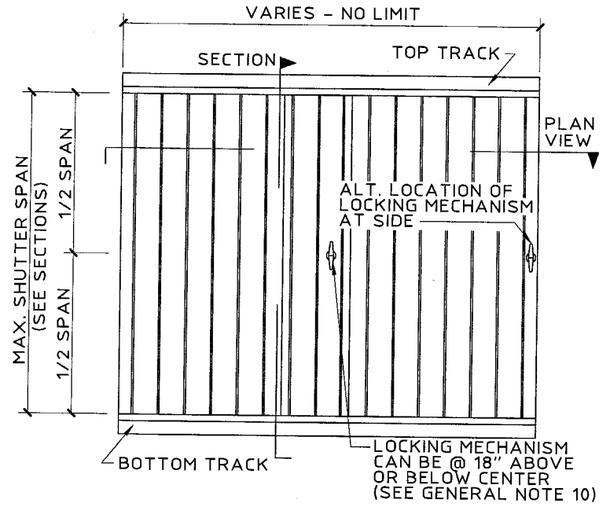


**TYPICAL ELEVATION**
N.T.S.

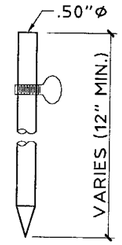


USED WITH PIECES 9a AND 10a

**LOCKING PIN**
SCALE: 1-1/2" = 1'-0"

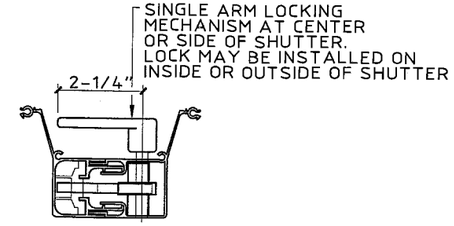


**SINGLE ARM LOCK**
N.T.S.

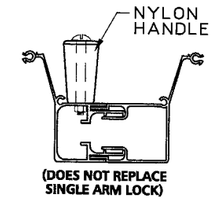


**OPTIONAL CLOSER HANDLE**
N.T.S.

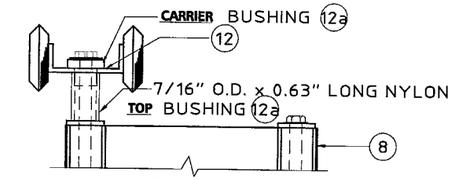


#10 x 2" SMS. MANUFACTURED FROM #410HT OR 18-8 STAINLESS W/ XYLAN 5200 FLUOROCARBON STEEL W/ XYLAN 5200 FLUOROCARBON COATING & .460"Ø x .050" THICK 300 SERIES STAINLESS STEEL WASHER (TYP. TOP & BOTTOM)

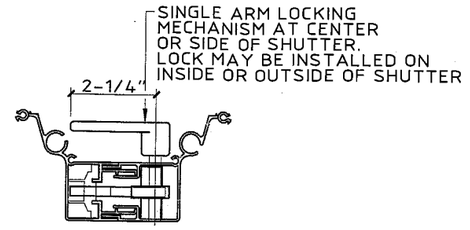


**SINGLE ARM LOCK**
N.T.S.

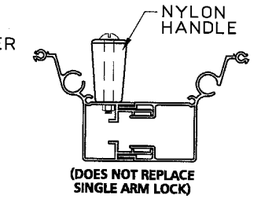


**OPTIONAL CLOSER HANDLE**
N.T.S.

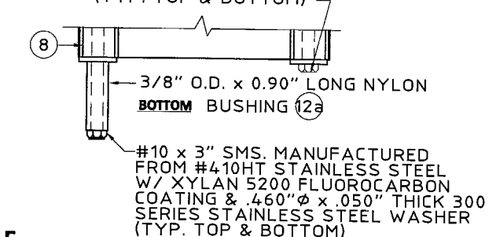


#10 x 3" SMS. MANUFACTURED FROM #410HT STAINLESS STEEL W/ XYLAN 5200 FLUOROCARBON COATING & .460"Ø x .050" THICK 300 SERIES STAINLESS STEEL WASHER (TYP. TOP & BOTTOM)

**SCREW BUSHING & ROLLER/ BUSHING ASSEMBLY**
SCALE: HALF SIZE

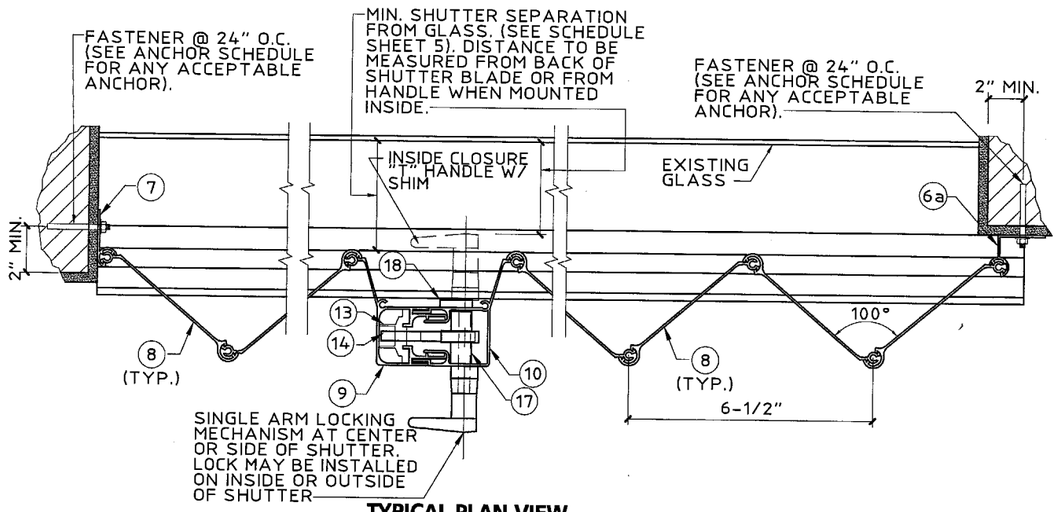


**TYPICAL PLAN VIEW**
SCALE: 3" = 1'-0"

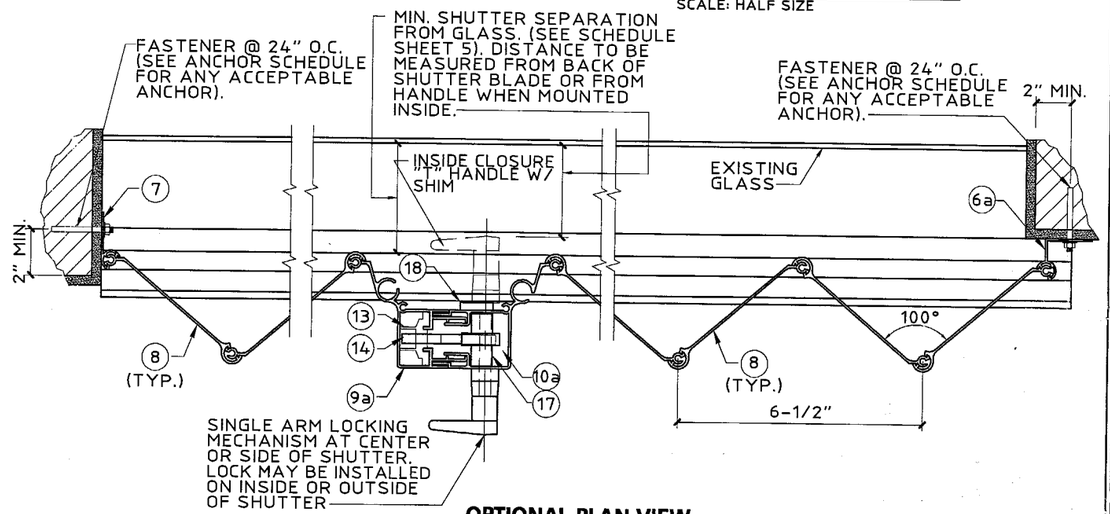


SCALE: 3" = 1'-0"

**OPTIONAL PLAN VIEW**
SCALE: 3" = 1'-0"

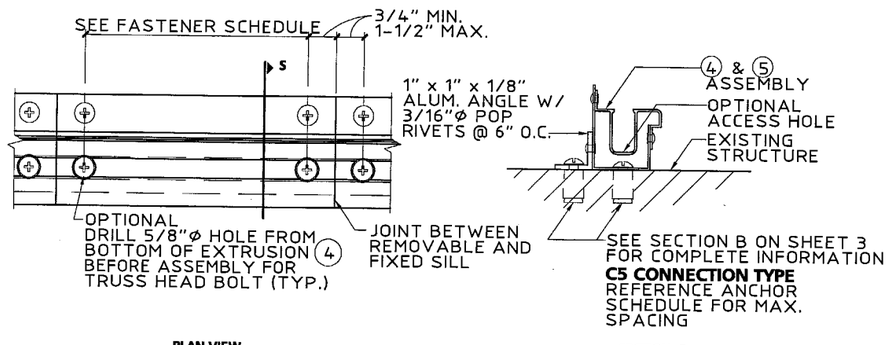


**PLAN VIEW** **SECTION S**

**REMOVABLE FLOOR TRACK DETAIL**
SCALE : 3"= 1'- 0"

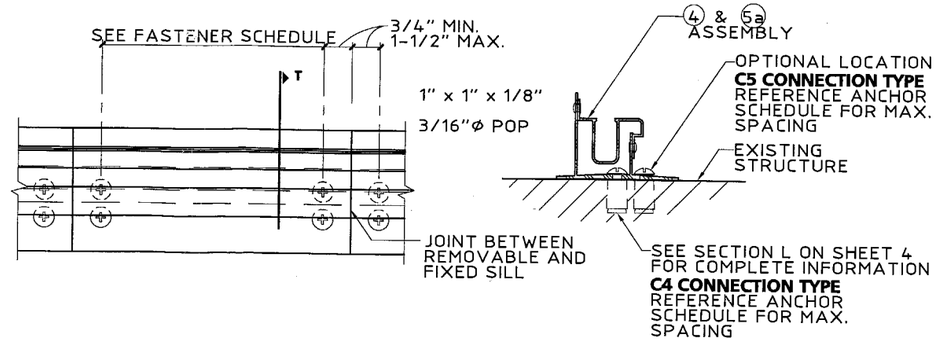


**PLAN VIEW** **SECTION T**

**OPTIONAL REMOVABLE FLOOR TRACK DETAIL**
SCALE : 3"= 1'- 0"

PRODUCT REVISED
as complying with the Florida Building Code
Acceptance No 06-0124.01
Expiration Date 05/26/2010
By Helmy A. Molar
Miami Dade Product Control Division

Thornton-Tomasetti Group
330 N. Andrews Ave., Suite 450 • Ft. Lauderdale, FL 33301
Tel. (954) 522-3690 • Fax (954) 522-3691 • COA # 7519
Website: www.TheTTGroup.com

Copyright © 2005 Thornton-Tomasetti Group, Inc.
HT100 LICENSED BY HI-TECH SHUTTER GROUP, INC.

HT-100 ALUMINUM ACCORDION SHUTTER

MOSSBROOKS ENTERPRISES INC.
291 LANCE LANE
KEY LARGO, FL 33037
PHONE: 305-453-9512
FAX: 305-453-0740

V.J. Knezevich
Professional Engineer
FL License No. PE0010983

NOV 09 2005

revisions

| no | date | by | description |
|---|---|---|---|
| 0 | 09/14/05 | VJK | PREVIOUSLY DRAWING NO. 02-458 |

HTSG I.D. # 051109055509D

date 09/14/2005
scale AS NOTED
drawn by MCR
design by VJK
checked by VJK
drawing no. 05-573
sheet 2 of 7

Print Information: P:\FL1\KA\CADD\Associations\Hi-Tech\Mossbrooks\05-573\R0-sub\05-573_02.dwg MCantu 11/09/2005 11:56:11am 11/09/05 11:54

Print Information: P:\FL1\KA\CADD\Associations\Hi-Tech\Mossbrooks\05-573\R0-sub\05-573-03.dwg MCantu 11/09/2005 11:56:20am 11/09/05 11:54

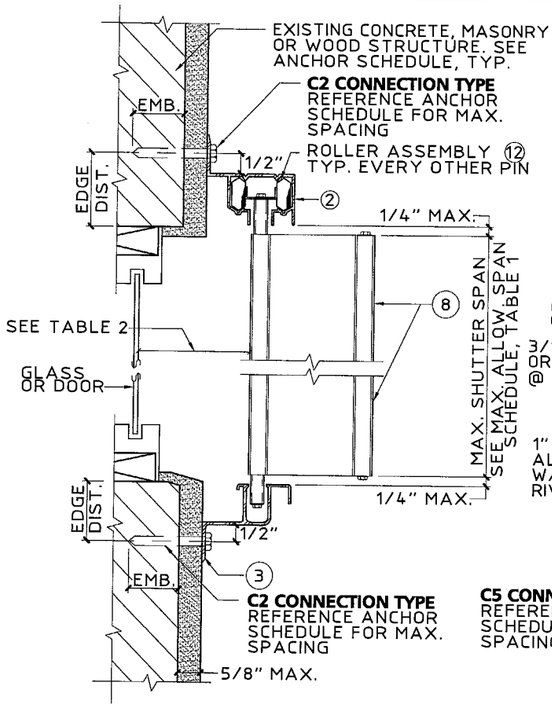


**(A) WALL MOUNT SECTION**
SCALE: 3" = 1'-0"

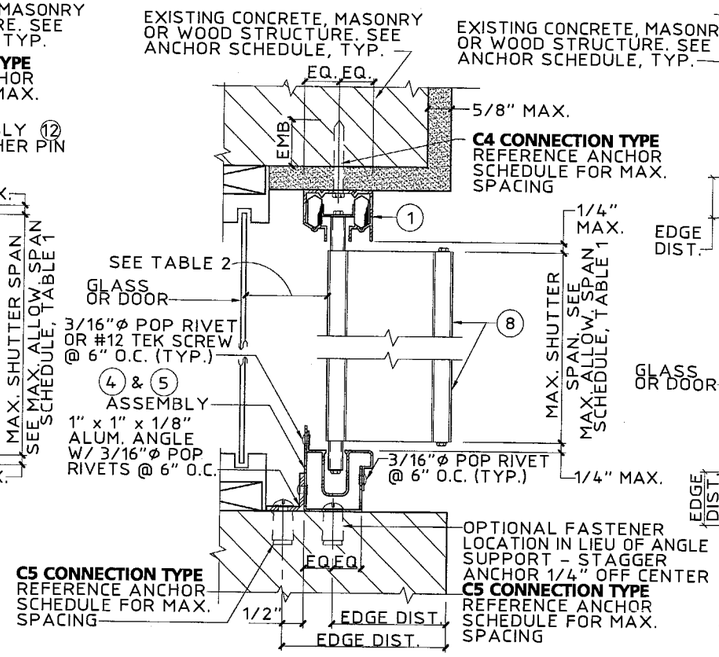


**(B) CEILING/INSIDE MOUNT SECTION**
SCALE: 3" = 1'-0"

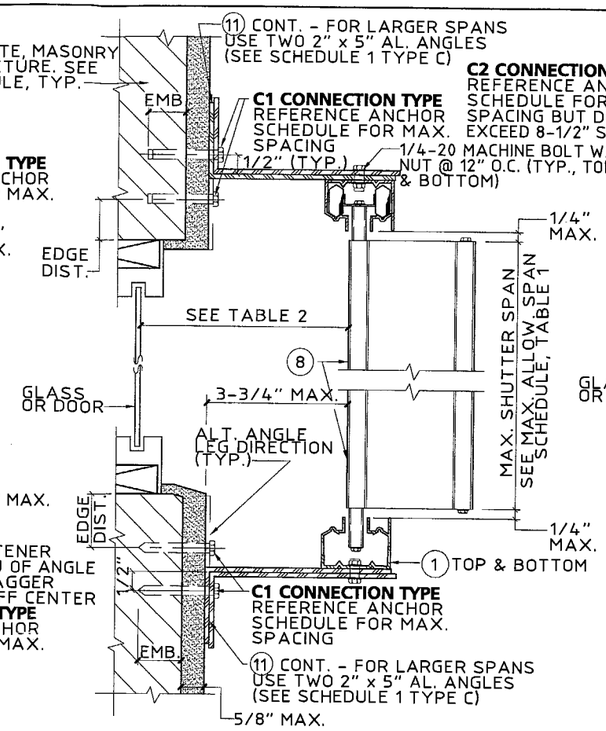


**(C) BUILD-OUT MOUNT SECTION**
SCALE: 3" = 1'-0"

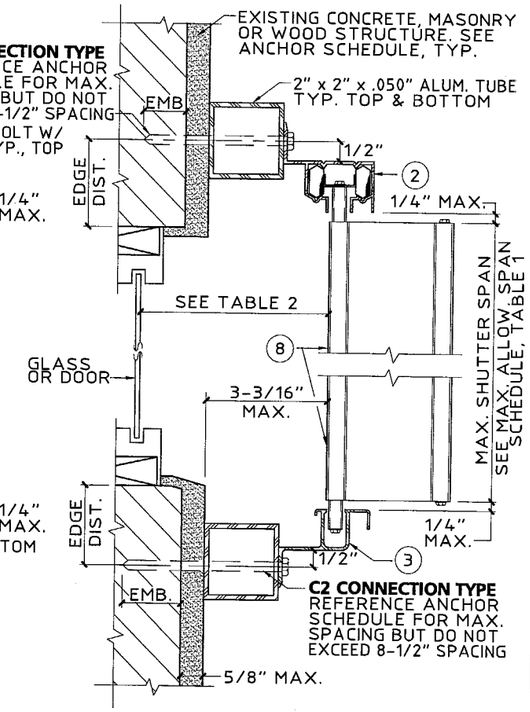


**(D) BUILD-OUT MOUNT SECTION**
SCALE: 3" = 1'-0"

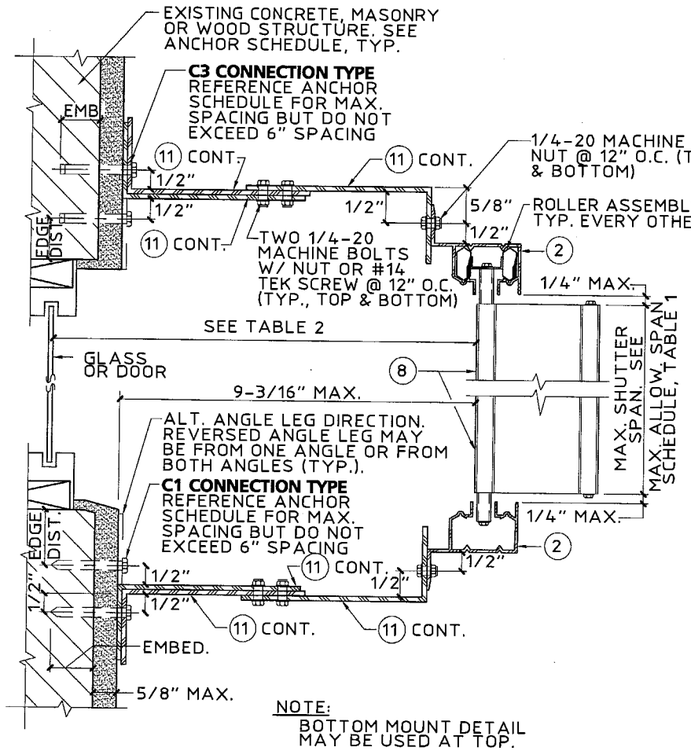


NOTE:
BOTTOM MOUNT DETAIL MAY BE USED AT TOP.

**(E) BUILD-OUT MOUNT SECTION**
SCALE: 3" = 1'-0"

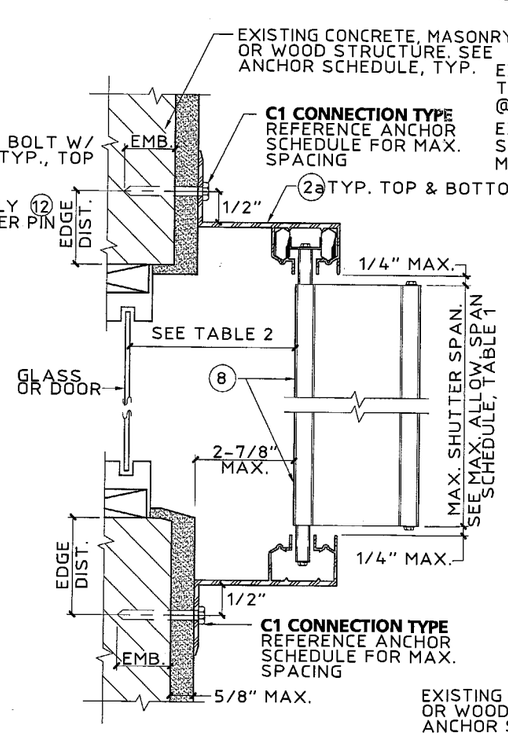


**(F) BUILD-OUT MOUNT SECTION**
SCALE: 3" = 1'-0"

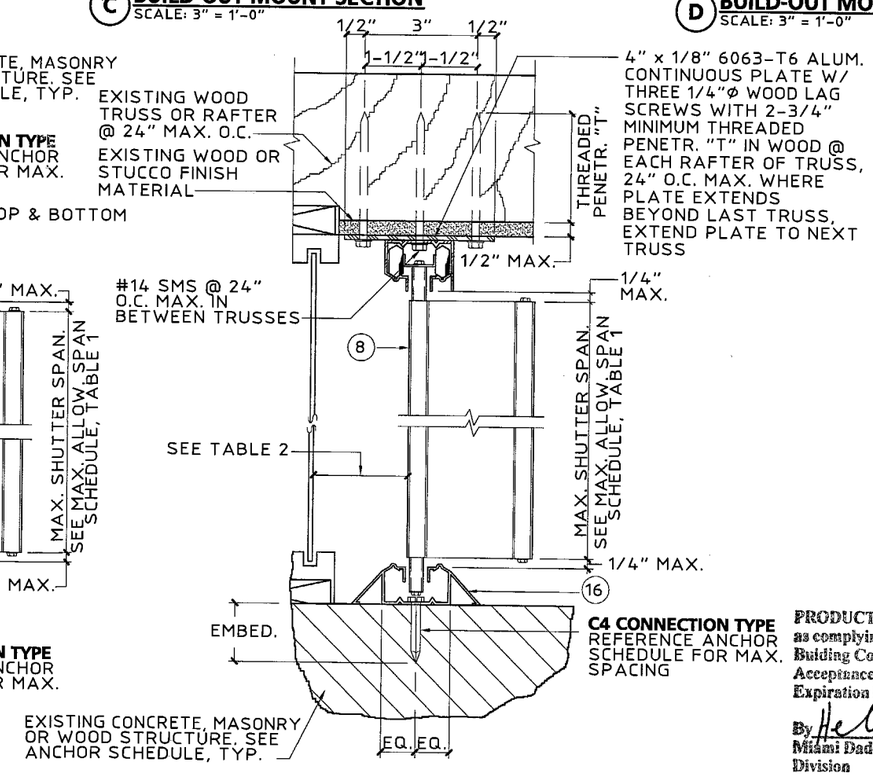


**WOOD SOFFIT / FLOOR MOUNT SECTION**
SCALE: 3" = 1'-0"

PRODUCT REVISED
as complying with the Florida Building Code
Acceptance No. 06-0124.01
Expiration Date 05/26/2010
By Helena A. Nolan
Miami Dade Product Control Division

Thornton-Tomasetti Group
330 N. Andrews Ave., Suite 450 • Ft. Lauderdale, FL 33301
Tel. (954) 522-3690 • Fax (954) 522-3691 • COA # 7519
Website: www.TheTTGroup.com

Copyright © 2005 Thornton-Tomasetti Group, Inc.
HT100 LICENSED BY HI-TECH SHUTTER GROUP, INC.

HT-100 ALUMINUM ACCORDION SHUTTER

MOSSBROOKS ENTERPRISES INC.
291 LANCE LANE
KEY LARGO, FL 33037
PHONE: 305-453-9512
FAX: 305-453-0740

V.J. Knezevich
Professional Engineer
FL License No.: PE-0010983
NOV 09 2005

revisions

| no | date | by | description |
|---|---|---|---|
| 0 | 09/14/05 | VJK | PREVIOUSLY DRAWING NO. 02-45a |

HTSG I.D. # 05110905509D

| | |
|---|---|
| date 09/14/2005 | |
| scale AS NOTED | drawn by MCR |
| design by VJK | checked by VJK |
| drawing no. 05-573 | |
| sheet 3 of 7 | |

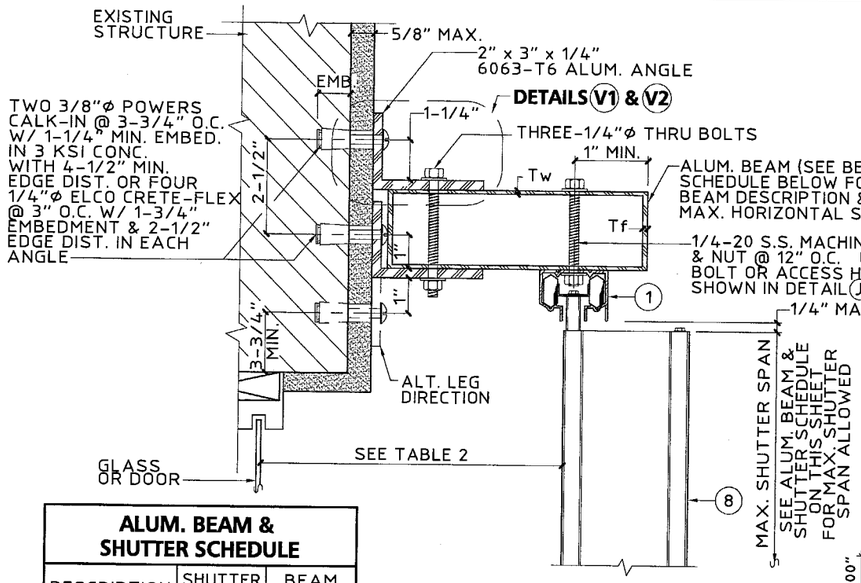


(MAX. DESIGN LOAD ± 72 PSF)

**H TOP SUPPORT BEAM DETAIL**
SCALE: 3" = 1'-0"

| ALUM. BEAM & SHUTTER SCHEDULE | | |
|---|---|---|
| DESCRIPTION | SHUTTER SPAN | BEAM SPAN |
| 2" x 5" Tw = .125" Tf = .125" | 5'-0" | 9'-5" |
| | 8'-0" | 8'-1" |
| | 10'-0" | 7'-6" |
| 2" x 8" Tw = .072" Tf = .224" | 5'-0" | 14'-0" |
| | 8'-0" | 11'-6" |
| | 10'-0" | 10'-4" |
| 2" x 9" Tw = .072" Tf = .224" | 5'-0" | 15'-5" |
| | 8'-0" | 12'-5" |
| | 10'-0" | 11'-2" |

**NOTE:**
1. USE BEAM SCHEDULE FOR DETAILS H AND J.
2. SHUTTER SPAN TO BE LIMITED TO THOSE SHOWN IN TABLE, SHEET 5.
3. BEAM SPAN SHALL BE CONSIDERED AS THE DISTANCE FROM ℄ OF SUPPORT TO ℄ OF SUPPORT.

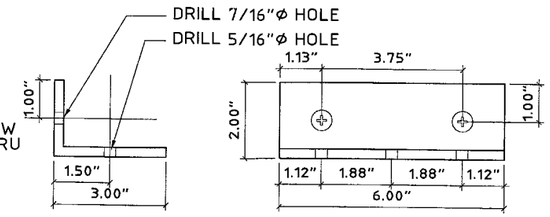


**V1 ANGLE DETAIL USING CALK-IN ANCHOR**
SCALE : 3"= 1'- 0"

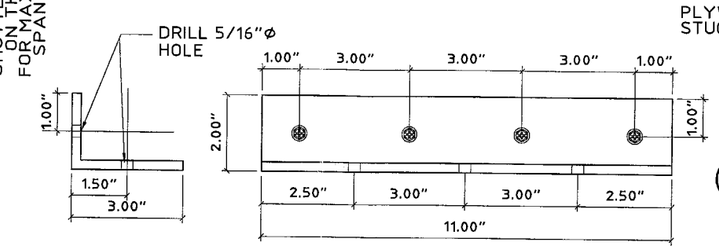


**V2 ANGLE DETAIL USING CRETE-FLEX ANCHOR**
SCALE : 3"= 1'- 0"

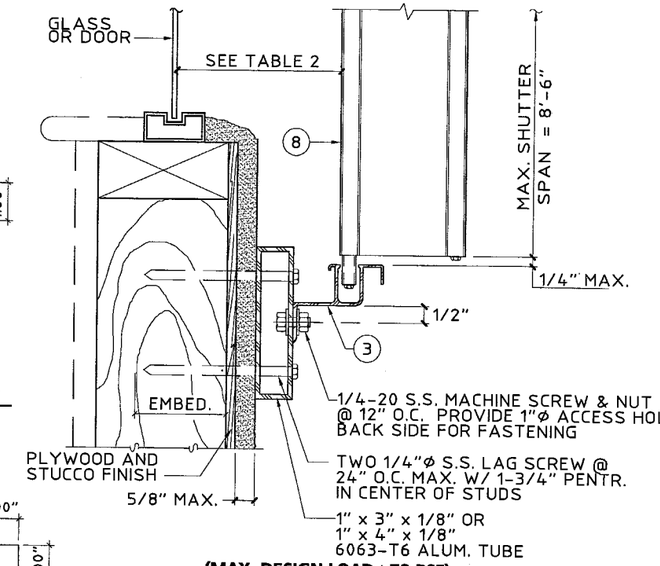


(MAX. DESIGN LOAD ± 72 PSF)

**I WALL MOUNT SECTION - USING ALUM. TUBE**
SCALE: 3" = 1'-0"

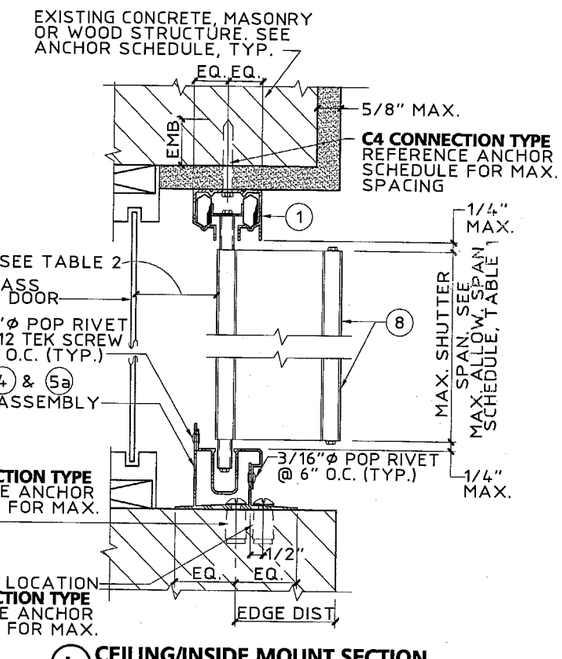


**L CEILING/INSIDE MOUNT SECTION**
SCALE: 3" = 1'-0"

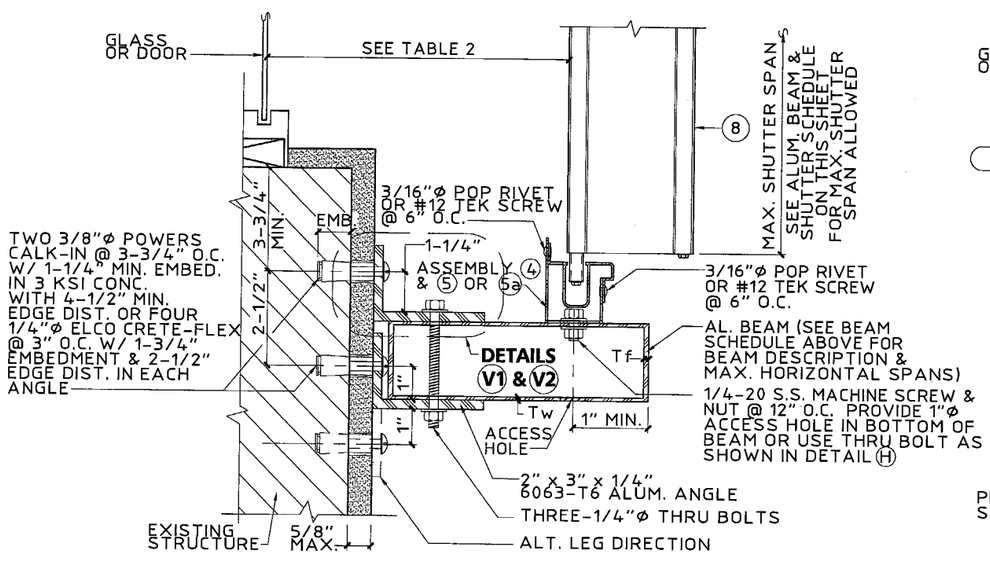


(MAX. DESIGN LOAD ± 72 PSF)

**J BOTTOM SUPPORT BEAM DETAIL**
SCALE: 3" = 1'-0"

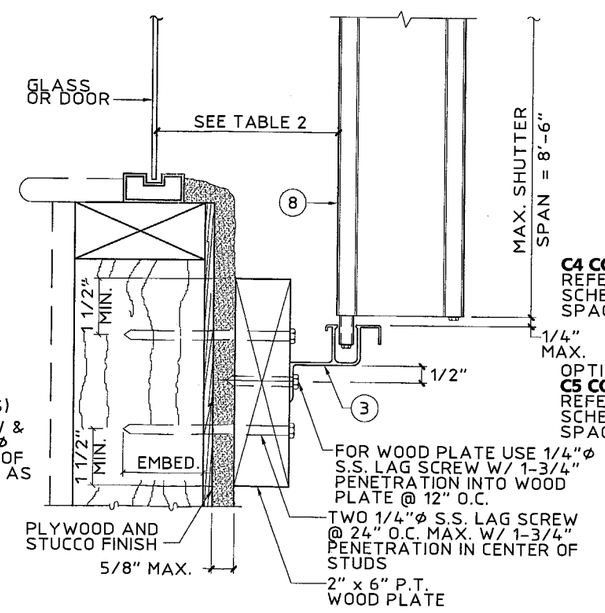


(MAX. DESIGN LOAD ± 72 PSF)

**K WALL MOUNT SECTION - USING 2" x 6" P.T. WOOD PLATE**
SCALE: 3" = 1'-0"

PRODUCT REVISED
as complying with the Florida Building Code
Acceptance No. 06-0124.01
Expiration Date 05/26/2010
By Helmy A. Mekkawy
Miami Dade Product Control Division


Thornton-Tomasetti Group
330 N. Andrews Ave., Suite 450 • Ft. Lauderdale, FL 33301
Tel. (954) 522-3690 • Fax (954) 522-3691 • COA # 7519
Website: www.TheTTGroup.com



Copyright © 2005 Thornton-Tomasetti Group, Inc.
HT100 LICENSED BY HI-TECH SHUTTER GROUP, INC.


HT-100 ALUMINUM ACCORDION SHUTTER

MOSSBROOKS ENTERPRISES INC.
291 LANCE LANE
KEY LARGO, FL 33037
PHONE: 305-453-9512
FAX: 305-453-0740

V.J. Knezevich
Professional Engineer
FL License No.: PE 0010983
NOV 09 2005

| revisions | | | |
|---|---|---|---|
| no | date | by | description |
| 0 | 09/14/05 | VJK | PREVIOUSLY DRAWING NO. 02-456 |

HTSG I.D. # 051109055509D

| | |
|---|---|
| date 09/14/2005 | |
| scale AS NOTED | drawn by MCR |
| design by VJK | checked by VJK |
| drawing no. 05-573 | |
| sheet 4 of 7 | |


Print Information: P:\FL1\KA\CADD\Associations\Hi-Tech\Mossbrooks\05-573\R0-sub\05-573-04.dwg MCantu 11/09/2005 11:56:29am 11/09/05 11:54

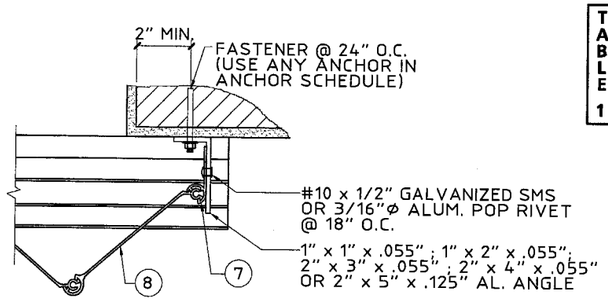


**(M) ALT. CLOSURE DETAIL**
SCALE: 3" = 1'-0"

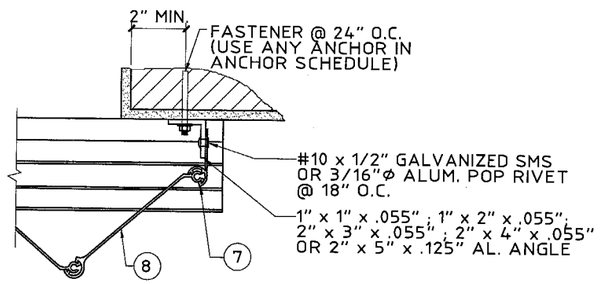


**(N) ALT. CLOSURE DETAIL**
SCALE: 3" = 1'-0"

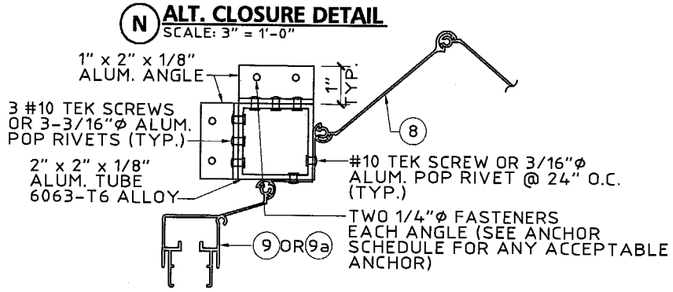


**NOTE:**
EITHER CONDITION MAY BE TYPICAL FOR EITHER SIDE

**(P) CORNER CLOSURE DETAIL**
SCALE: 3" = 1'-0"

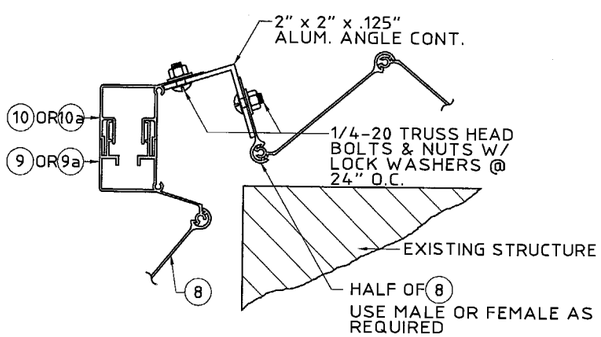


**(Q) ALT. CORNER CLOSURE DETAIL**
SCALE: 3" = 1'-0"

**TABLE 1 — MAXIMUM ALLOWABLE SPAN SCHEDULE**

| NEG. DESIGN LOAD (PSF) | TYPE A ALL MOUNTING CONDITIONS EXCEPT (C)(E)(F) (FT - IN) | TYPE B DETAIL (F) OR DETAIL (C) W/ SINGLE ANGLE REQUIRED 3-3/4" MAX. B.O. (FT - IN) | TYPE C DETAIL (C) DOUBLE ANGLE REQUIRED 3-3/4" MAX. B.O. (FT - IN) | TYPE D DETAIL (E) 9-3/16" MAX. B.O. (FT - IN) |
|---|---|---|---|---|
| 30.0 | 13 - 1 | 12 - 4 | 13 - 1 | 12 - 7 |
| 38.0 | 13 - 1 | 11 - 0 | 13 - 1 | 11 - 2 |
| 40.0 | 12 - 11 | 10 - 8 | 12 - 5 | 10 - 11 |
| 48.0 | 12 - 4 | 9 - 9 | 10 - 4 | 10 - 0 |
| 52.0 | 12 - 1 | 9 - 4 | 9 - 7 | 9 - 7 |
| 56.0 | 11 - 11 | 9 - 0 | 9 - 0 | 9 - 3 |
| 61.5 | 11 - 7 | 8 - 7 | 8 - 7 | 8 - 10 |
| 63.3 | 11 - 6 | 8 - 6 | 8 - 6 | 8 - 8 |
| 66.8 | 10 - 11 | 8 - 3 | 8 - 3 | 8 - 5 |
| 67.5 | 10 - 9 | 8 - 3 | 8 - 3 | 8 - 5 |
| 71.2 | 10 - 3 | 8 - 0 | 8 - 0 | 8 - 2 |
| 75.0 | 9 - 8 | 7 - 8 | 7 - 8 | 8 - 0 |
| 81.4 | 8 - 11 | 7 - 0 | 7 - 0 | 7 - 4 |
| 86.8 | 8 - 5 | 6 - 7 | 6 - 7 | 6 - 10 |
| 91.4 | 8 - 0 | 6 - 3 | 6 - 3 | 6 - 6 |
| 100.0 | 7 - 3 | 5 - 9 | 5 - 9 | 6 - 0 |
| 110.0 | 6 - 7 | 5 - 2 | 5 - 2 | 5 - 5 |
| 120.0 | 6 - 1 | 4 - 9 | 4 - 9 | 5 - 0 |
| 130.0 | 5 - 7 | 4 - 5 | 4 - 5 | 4 - 7 |
| 140.0 | 5 - 2 | 4 - 1 | 4 - 1 | 4 - 3 |
| 150.0 | 4 - 10 | 3 - 10 | 3 - 10 | 4 - 0 |
| 160.0 | 4 - 6 | 3 - 7 | 3 - 7 | 3 - 9 |
| 170.0 | 4 - 3 | 3 - 4 | 3 - 4 | 3 - 6 |

NOTES:

1. REFERENCE APPROPRIATE COLUMN IN TABLE 1 BASED ON MOUNTING CONDITION IN FIELD.
2. FOR DESIGN LOADS BETWEEN TABULATED VALUES, USE NEXT HIGHER LOAD OR LINEAR INTERPOLATION MAY BE USED TO DETERMINE ALLOWABLE SPANS.
3. ENTER TABLE 1 WITH NEGATIVE DESIGN LOAD TO DETERMINE MAX. SHUTTER SPAN.
4. ENTER TABLE 2 WITH POSITIVE DESIGN LOAD TO DETERMINE MIN. SHUTTER SPACING FROM GLASS.

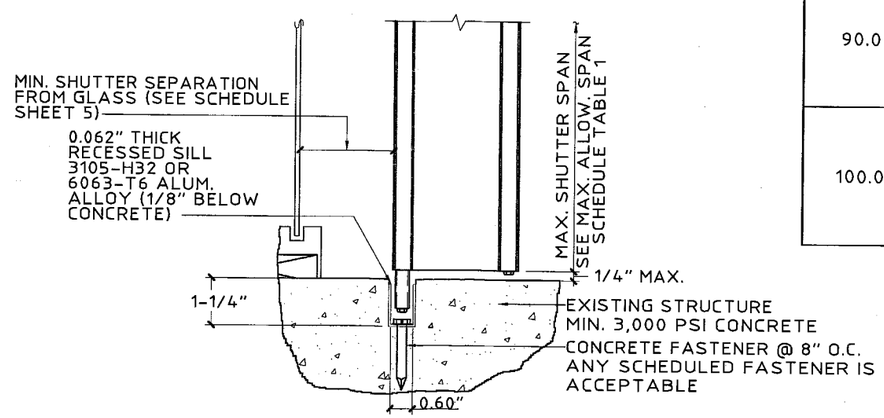


**(R) ALTERNATE FLOOR MOUNT DETAIL**
SCALE: 3" = 1'-0"

**TABLE 2 — MINIMUM SHUTTER SEPARATION FROM GLASS (IN)**

| POSITIVE DESIGN LOAD (W) (PSF) | ACTUAL SPAN (FT - IN) | MINIMUM SEPARATION FROM GLASS FOR INSTALLATIONS LESS THAN OR EQUAL TO 30' ABOVE GRADE (INCHES) | MINIMUM SEPARATION FROM GLASS FOR INSTALLATIONS GREATER THAN 30' ABOVE GRADE (INCHES) |
|---|---|---|---|
| 30.0 | 5 - 0 | 2-7/8 | 1-1/2 |
| | 7 - 0 | 2-7/8 | 1-5/8 |
| | 8 - 0 | 2-7/8 | 1-5/8 |
| | 11 - 0 | 3 | 2-1/8 |
| | 13 - 1 | 3-3/4 | 2-3/4 |
| 40.0 | 5 - 0 | 2-7/8 | 1-1/2 |
| | 7 - 0 | 2-7/8 | 1-5/8 |
| | 8 - 0 | 2-7/8 | 1-5/8 |
| | 11 - 0 | 3 | 2-1/4 |
| | 12 - 11 | 3-3/4 | 3 |
| 50.0 | 5 - 0 | 2-7/8 | 1-1/2 |
| | 7 - 0 | 2-7/8 | 1-5/8 |
| | 8 - 0 | 2-7/8 | 1-3/4 |
| | 11 - 0 | 3 | 2-1/2 |
| | 12 - 2 | 3-3/4 | 3 |
| 60.0 | 5 - 0 | 2-7/8 | 1-1/2 |
| | 7 - 0 | 2-7/8 | 1-5/8 |
| | 8 - 0 | 2-7/8 | 1-3/4 |
| | 11 - 0 | 3 | 1-3/4 |
| | 11 - 8 | 3-3/4 | 3 |
| 70.0 | 5 - 0 | 2-7/8 | 1-1/2 |
| | 7 - 0 | 2-7/8 | 1-5/8 |
| | 8 - 0 | 2-7/8 | 1-7/8 |
| | 9 - 6 | 3 | 2-1/4 |
| | 10 - 4 | 3 | 2-5/8 |
| 80.0 | 5 - 0 | 2-7/8 | 1-1/2 |
| | 7 - 0 | 2-7/8 | 1-3/4 |
| | 8 - 0 | 2-7/8 | 1-7/8 |
| | 11 - 0 | 3-1/8 | 3-1/8 |
| | 12 - 1 | 4 | 4 |
| 90.0 | 5 - 0 | 2-7/8 | 1-1/2 |
| | 7 - 0 | 2-7/8 | 1-3/4 |
| | 8 - 0 | 2-7/8 | 2 |
| | 11 - 0 | 3-3/8 | 3-3/8 |
| | 11 - 6 | 3-7/8 | 4 |
| 100.0 | 5 - 0 | 2-7/8 | 1-1/2 |
| | 7 - 0 | 2-7/8 | 1-3/4 |
| | 8 - 0 | 2-7/8 | 2 |
| | 9 - 0 | 3 | 2-3/4 |
| | 10 - 3 | 3 | 3 |

PRODUCT REVISED
as complying with the Florida Building Code
Acceptance No 06-0124.01
Expiration Date 05/26/2010
By Helena A. Melo
Miami Dade Product Control Division


Thornton-Tomasetti Group
330 N. Andrews Ave., Suite 450 • Ft. Lauderdale, FL 33301
Tel. (954) 522-3690 • Fax (954) 522-3691 • COA # 7519
Website: www.TheTTGroup.com



Copyright © 2005 Thornton-Tomasetti Group, Inc.
HT100 LICENSED BY HI-TECH SHUTTER GROUP, INC.


HT-100 ALUMINUM ACCORDION SHUTTER

MOSSBROOKS ENTERPRISES INC.
291 LANCE LANE
KEY LARGO, FL 33037
PHONE: 305-453-9512
FAX: 305-453-0740

V.J. Knezevich
Professional Engineer
FL License No.: PE-0020983

NOV 09 2005

revisions

| no | date | by | description |
|---|---|---|---|
| 0 | 09/14/05 | VJK | PREVIOUSLY DRAWING NO. 02-458 |

HTSG I.D. # 051109055509D

date 09/14/2005
scale AS NOTED
drawn by MCR
design by VJK
checked by VJK
drawing no. 05-573
sheet 5 of 7

Print Information: P:\FL1\KA\CADD\Associations\Hi-Tech\Mossbrooks\05-573\R0-sub\05-573-05.dwg MCantu 11/09/2005 11:56:36am 11/09/05 11:54

Print Information: P:\FL1\KA\CADD\Associations\Hi-Tech\Mossbrooks\05-573\R0-sub\05-573-06.dwg MCantu 11/09/2005 11:56:45am

11/09/05 11:54

# ANCHOR SCHEDULE

FASTENER MAXIMUM SPACING (INCHES) REQUIRED FOR VARIOUS DESIGN LOADS AND SPANS

**MIN. 2" EDGE DISTANCE**

| EXIST. STRUC. | ANCHOR TYPE | LOAD (W) P.S.F. MAX. (SEE NOTE 1) | SPANS UP TO 5'-8" (SEE NOTE 1) CONNECTION TYPE (SEE NOTE 3) C1 | C2 | C3 | C4 | C5 | SPANS UP TO 8'-0" (SEE NOTE 1) CONNECTION TYPE (SEE NOTE 3) C1 | C2 | C3 | C4 | C5 | SPANS UP TO 9'-0" (SEE NOTE 1) CONNECTION TYPE (SEE NOTE 3) C1 | C2 | C3 | C4 | C5 | SPANS UP TO 13'-1" (SEE NOTE 1) CONNECTION TYPE (SEE NOTE 3) C1 | C2 | C3 | C4 | C5 |
|---|---|---|---|---|---|---|---|---|---|---|---|---|---|---|---|---|---|---|---|---|---|---|
| CONCRETE | 1/4"ϕ ITW TAPCON W/ 1-1/4" MIN. EMBEDMENT (MIN. 3,100 P.S.I. CONCRETE) | 45.0 | 12 | 12 | 12 | 12 | 7 | 12 | 12 | 12 | 8 | 5 | 12 | 12 | 12 | 7 | 4 | 10 | 5 | 5 | 5 | 3 |
| | | 57.0 | 12 | 12 | 12 | 9 | 6 | 12 | 12 | 12 | 6 | 4 | 11 | 9 | 10 | 6 | 3 | 8 | 3 | — | 4 | — |
| | | 73.0 | 12 | 12 | 12 | 7 | 4 | 10 | 5 | 5 | 5 | 3 | 9 | 4 | 3 | 4 | — | 8 | 3 | — | 4 | — |
| | | 105.0 | 10 | 5 | 5 | 5 | 3 | 8 | 3 | — | 4 | — | 8 | 3 | — | 4 | — | 8 | 3 | — | 4 | — |
| | | 170.0 | 8 | 3 | — | 4 | — | 8 | 3 | — | 4 | — | 8 | 3 | — | 4 | — | 8 | 3 | — | 4 | — |
| | * 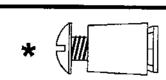 1/4"ϕ POWERS CALK-IN W/ 7/8" EMBEDMENT & 1/4-20 STAINLESS STEEL MACHINE SCREW (MIN. 3,000 P.S.I. CONCRETE) | 45.0 | 12 | 12 | 12 | 12 | 9 | 12 | 12 | 12 | 9 | 6 | 12 | 12 | 12 | 8 | 6 | 12 | 9 | 9 | 5 | 4 |
| | | 57.0 | 12 | 12 | 12 | 10 | 7 | 12 | 12 | 12 | 7 | 5 | 12 | 12 | 12 | 6 | 4 | 12 | 5 | 4 | 4 | 3 |
| | | 73.0 | 12 | 12 | 12 | 8 | 5 | 12 | 9 | 9 | 5 | 4 | 12 | 6 | 6 | 5 | 3 | 12 | 5 | 4 | 4 | 3 |
| | | 105.0 | 12 | 9 | 8 | 5 | 4 | 12 | 5 | 4 | 4 | 3 | 12 | 5 | 4 | 4 | 3 | 12 | 5 | 4 | 4 | 3 |
| | | 170.0 | 12 | 5 | 4 | 4 | 3 | 12 | 5 | 4 | 4 | 3 | 12 | 5 | 4 | 4 | 3 | 12 | 5 | 4 | 4 | 3 |
| | 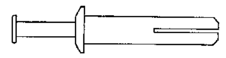 1/4"ϕ POWERS ZAMAC NAIL-IN W/ 1-1/8" MIN. EMBEDMENT (MIN. 3,000 P.S.I. CONCRETE) | 45.0 | 12 | 12 | 12 | 10 | 6 | 12 | 12 | 12 | 7 | 4 | 12 | 12 | 12 | 6 | 4 | 8 | 4 | 4 | 4 | — |
| | | 57.0 | 12 | 12 | 12 | 8 | 5 | 10 | 10 | 10 | 5 | 3 | 9 | 7 | 8 | 5 | 3 | 6 | — | — | 3 | — |
| | | 73.0 | 11 | 11 | 11 | 6 | 3 | 8 | 4 | 4 | 4 | — | 7 | 3 | 3 | 4 | — | 6 | — | — | 3 | — |
| | | 105.0 | 8 | 4 | 4 | 4 | — | 6 | — | — | 3 | — | 6 | — | — | 3 | — | 6 | — | — | 3 | — |
| | | 170.0 | 6 | — | — | 3 | — | 6 | — | — | 3 | — | 6 | — | — | 3 | — | 6 | — | — | 3 | — |
| | * * 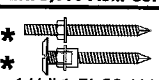 1/4"ϕ ELCO MALE/ FEMALE "PANELMATE" W/ 1-1/4 MIN. EMBEDMENT & 1/4-20 MACHINE SCREW WITH NUT (MIN. 3,300 P.S.I. CONCRETE) | 45.0 | 12 | 12 | 12 | 12 | 11 | 12 | 12 | 12 | 12 | 7 | 12 | 12 | 12 | 11 | 6 | 12 | 8 | 7 | 7 | 4 |
| | | 57.0 | 12 | 12 | 12 | 12 | 8 | 12 | 12 | 12 | 9 | 6 | 12 | 12 | 12 | 8 | 5 | 11 | 4 | 4 | 6 | 3 |
| | | 73.0 | 12 | 12 | 12 | 10 | 6 | 12 | 8 | 8 | 7 | 4 | 12 | 5 | 5 | 6 | 4 | 11 | 4 | 4 | 6 | 3 |
| | | 105.0 | 12 | 7 | 7 | 7 | 4 | 11 | 4 | 4 | 6 | 3 | 11 | 4 | 4 | 6 | 3 | 11 | 4 | 4 | 6 | 3 |
| | | 170.0 | 11 | 4 | 4 | 6 | 3 | 11 | 4 | 4 | 6 | 3 | 11 | 4 | 4 | 6 | 3 | 11 | 4 | 4 | 6 | 3 |
| | 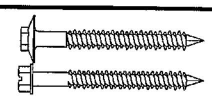 1/4" ELCO TEXTRON HEX-FLANGE TAPCON/ HEX HEAD TAPCON W/ 1-3/4" EMBED (MIN. 3,320 P.S.I. CONCRETE) | 45.0 | 12 | 12 | 12 | 12 | 11 | 12 | 12 | 12 | 12 | 7 | 12 | 12 | 12 | 11 | 7 | 12 | 8 | 8 | 7 | 4 |
| | | 57.0 | 12 | 12 | 12 | 12 | 8 | 12 | 12 | 12 | 9 | 6 | 12 | 12 | 12 | 8 | 5 | 12 | 4 | 4 | 6 | 3 |
| | | 73.0 | 12 | 12 | 12 | 10 | 6 | 12 | 8 | 8 | 7 | 4 | 12 | 6 | 5 | 6 | 4 | 12 | 4 | 4 | 6 | 3 |
| | | 105.0 | 12 | 8 | 8 | 7 | 4 | 12 | 4 | 4 | 6 | 3 | 12 | 4 | 4 | 6 | 3 | 12 | 4 | 4 | 6 | 3 |
| | | 170.0 | 12 | 4 | 4 | 6 | 3 | 12 | 4 | 4 | 6 | 3 | 12 | 4 | 4 | 6 | 3 | 12 | 4 | 4 | 6 | 3 |
| | 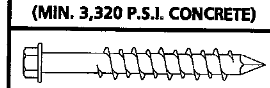 1/4"ϕ ELCO CRETE FLEX W/ 1-3/4" MIN. EMBEDMENT (MIN. 3,350 P.S.I. CONCRETE) | 45.0 | 12 | 12 | 12 | 12 | 11 | 12 | 12 | 12 | 12 | 7 | 12 | 12 | 12 | 11 | 7 | 12 | 8 | 8 | 7 | 4 |
| | | 57.0 | 12 | 12 | 12 | 12 | 8 | 12 | 12 | 12 | 9 | 6 | 12 | 12 | 12 | 8 | 5 | 12 | 4 | 4 | 6 | 3 |
| | | 73.0 | 12 | 12 | 12 | 10 | 6 | 12 | 8 | 8 | 7 | 4 | 12 | 6 | 5 | 6 | 4 | 12 | 4 | 4 | 6 | 3 |
| | | 105.0 | 12 | 8 | 8 | 7 | 4 | 12 | 4 | 4 | 6 | 3 | 12 | 4 | 4 | 6 | 3 | 12 | 4 | 4 | 6 | 3 |
| | | 170.0 | 12 | 4 | 4 | 6 | 3 | 12 | 4 | 4 | 6 | 3 | 12 | 4 | 4 | 6 | 3 | 12 | 4 | 4 | 6 | 3 |

**MIN. 3" EDGE DISTANCE**

| EXIST. STRUC. | ANCHOR TYPE | LOAD (W) P.S.F. MAX. (SEE NOTE 1) | SPANS UP TO 5'-8" (SEE NOTE 1) CONNECTION TYPE (SEE NOTE 3) C1 | C2 | C3 | C4 | C5 | SPANS UP TO 8'-0" (SEE NOTE 1) CONNECTION TYPE (SEE NOTE 3) C1 | C2 | C3 | C4 | C5 | SPANS UP TO 9'-0" (SEE NOTE 1) CONNECTION TYPE (SEE NOTE 3) C1 | C2 | C3 | C4 | C5 | SPANS UP TO 13'-1" (SEE NOTE 1) CONNECTION TYPE (SEE NOTE 3) C1 | C2 | C3 | C4 | C5 |
|---|---|---|---|---|---|---|---|---|---|---|---|---|---|---|---|---|---|---|---|---|---|---|
| CONCRETE | 1/4"ϕ ITW TAPCON W/ 1-1/4" MIN. EMBEDMENT (MIN. 3,100 P.S.I. CONCRETE) | 45.0 | 12 | 12 | 12 | 12 | 9 | 12 | 12 | 12 | 10 | 6 | 12 | 12 | 12 | 9 | 5 | 11 | 6 | 6 | 6 | 3 |
| | | 57.0 | 12 | 12 | 12 | 11 | 7 | 12 | 12 | 12 | 8 | 5 | 12 | 10 | 12 | 7 | 4 | 9 | 3 | 3 | 5 | 3 |
| | | 73.0 | 12 | 12 | 12 | 9 | 5 | 11 | 6 | 6 | 6 | 4 | 10 | 4 | 4 | 5 | 3 | 9 | 3 | 3 | 5 | 3 |
| | | 105.0 | 11 | 6 | 6 | 6 | 3 | 9 | 3 | 3 | 5 | 3 | 9 | 3 | 3 | 5 | 3 | 9 | 3 | 3 | 5 | 3 |
| | | 170.0 | 9 | 3 | 3 | 5 | 3 | 9 | 3 | 3 | 5 | 3 | 9 | 3 | 3 | 5 | 3 | 9 | 3 | 3 | 5 | 3 |
| | 1/4"ϕ POWERS CALK-IN W/ 7/8" EMBEDMENT & 1/4-20 STAINLESS STEEL MACHINE SCREW (MIN. 3,000 P.S.I. CONCRETE) | 45.0 | 12 | 12 | 12 | 12 | 12 | 12 | 12 | 12 | 12 | 10 | 12 | 12 | 12 | 12 | 9 | 12 | 11 | 11 | 9 | 6 |
| | | 57.0 | 12 | 12 | 12 | 12 | 11 | 12 | 12 | 12 | 12 | 8 | 12 | 12 | 12 | 10 | 7 | 12 | 6 | 6 | 7 | 5 |
| | | 73.0 | 12 | 12 | 12 | 12 | 8 | 12 | 12 | 11 | 9 | 6 | 12 | 8 | 8 | 8 | 5 | 12 | 6 | 6 | 7 | 5 |
| | | 105.0 | 12 | 11 | 11 | 9 | 6 | 12 | 6 | 6 | 7 | 5 | 12 | 6 | 6 | 7 | 5 | 12 | 6 | 6 | 7 | 5 |
| | | 170.0 | 12 | 6 | 6 | 7 | 5 | 12 | 6 | 6 | 7 | 5 | 12 | 6 | 6 | 7 | 5 | 12 | 6 | 6 | 7 | 5 |
| | 1/4"ϕ POWERS ZAMAC NAIL-IN W/ 1-1/8" MIN. EMBEDMENT (MIN. 3,000 P.S.I. CONCRETE) | 45.0 | 12 | 12 | 12 | 12 | 7 | 12 | 12 | 12 | 9 | 5 | 12 | 12 | 12 | 8 | 4 | 9 | 5 | 5 | 5 | 3 |
| | | 57.0 | 12 | 12 | 12 | 10 | 6 | 12 | 12 | 12 | 7 | 4 | 10 | 8 | 9 | 6 | 3 | 7 | — | — | 4 | — |
| | | 73.0 | 12 | 12 | 12 | 7 | 4 | 9 | 5 | 5 | 5 | 3 | 8 | 3 | 3 | 4 | — | 7 | — | — | 4 | — |
| | | 105.0 | 9 | 5 | 4 | 5 | 3 | 7 | — | — | 4 | — | 7 | — | — | 4 | — | 7 | — | — | 4 | — |
| | | 170.0 | 7 | — | — | 4 | — | 7 | — | — | 4 | — | 7 | — | — | 4 | — | 7 | — | — | 4 | — |
| | 1/4"ϕ ELCO MALE/ FEMALE "PANELMATE" W/ 1-1/4 MIN. EMBEDMENT & 1/4-20 MACHINE SCREW WITH NUT (MIN. 3,300 P.S.I. CONCRETE) | 45.0 | 12 | 12 | 12 | 12 | 12 | 12 | 12 | 12 | 12 | 8 | 12 | 12 | 12 | 12 | 7 | 12 | 8 | 8 | 8 | 5 |
| | | 57.0 | 12 | 12 | 12 | 12 | 9 | 12 | 12 | 12 | 11 | 6 | 12 | 12 | 12 | 10 | 6 | 12 | 4 | 4 | 7 | 4 |
| | | 73.0 | 12 | 12 | 12 | 12 | 7 | 12 | 8 | 8 | 8 | 5 | 12 | 6 | 5 | 7 | 4 | 12 | 4 | 4 | 7 | 4 |
| | | 105.0 | 12 | 8 | 7 | 8 | 5 | 12 | 4 | 4 | 7 | 4 | 12 | 4 | 4 | 7 | 4 | 12 | 4 | 4 | 7 | 4 |
| | | 170.0 | 12 | 4 | 4 | 7 | 4 | 12 | 4 | 4 | 7 | 4 | 12 | 4 | 4 | 7 | 4 | 12 | 4 | 4 | 7 | 4 |
| | 1/4" ELCO TEXTRON HEX-FLANGE TAPCON/ HEX HEAD TAPCON W/ 1-3/4" EMBED (MIN. 3,320 P.S.I. CONCRETE) | 45.0 | 12 | 12 | 12 | 12 | 12 | 12 | 12 | 12 | 12 | 9 | 12 | 12 | 12 | 12 | 8 | 12 | 10 | 10 | 9 | 6 |
| | | 57.0 | 12 | 12 | 12 | 12 | 11 | 12 | 12 | 12 | 12 | 7 | 12 | 12 | 12 | 10 | 7 | 12 | 6 | 5 | 7 | 4 |
| | | 73.0 | 12 | 12 | 12 | 12 | 8 | 12 | 11 | 10 | 9 | 6 | 12 | 7 | 7 | 8 | 5 | 12 | 6 | 5 | 7 | 4 |
| | | 105.0 | 12 | 10 | 10 | 9 | 6 | 12 | 6 | 5 | 7 | 4 | 12 | 6 | 5 | 7 | 4 | 12 | 6 | 5 | 7 | 4 |
| | | 170.0 | 12 | 6 | 5 | 7 | 4 | 12 | 6 | 5 | 7 | 4 | 12 | 6 | 5 | 7 | 4 | 12 | 6 | 5 | 7 | 4 |
| | 1/4"ϕ ELCO CRETE FLEX W/ 1-3/4" MIN. EMBEDMENT (MIN. 3,350 P.S.I. CONCRETE) | 45.0 | 12 | 12 | 12 | 12 | 12 | 12 | 12 | 12 | 12 | 9 | 12 | 12 | 12 | 12 | 8 | 12 | 10 | 10 | 9 | 6 |
| | | 57.0 | 12 | 12 | 12 | 12 | 11 | 12 | 12 | 12 | 12 | 7 | 12 | 12 | 12 | 10 | 7 | 12 | 6 | 5 | 7 | 4 |
| | | 73.0 | 12 | 12 | 12 | 12 | 8 | 12 | 11 | 10 | 9 | 6 | 12 | 7 | 7 | 8 | 5 | 12 | 6 | 5 | 7 | 4 |
| | | 105.0 | 12 | 10 | 10 | 9 | 6 | 12 | 6 | 5 | 7 | 4 | 12 | 6 | 5 | 7 | 4 | 12 | 6 | 5 | 7 | 4 |
| | | 170.0 | 12 | 6 | 5 | 7 | 4 | 12 | 6 | 5 | 7 | 4 | 12 | 6 | 5 | 7 | 4 | 12 | 6 | 5 | 7 | 4 |

# ANCHOR SCHEDULE

FASTENER MAXIMUM SPACING (INCHES) REQUIRED FOR VARIOUS DESIGN LOADS AND SPANS

**MIN. 3/4" EDGE DISTANCE**

| EXIST. STRUC. | ANCHOR TYPE | LOAD (W) P.S.F. MAX. (SEE NOTE 1) | SPANS UP TO 5'-8" (SEE NOTE 1) CONNECTION TYPE (SEE NOTE 3) C1 | C2 | C3 | C4 | C5 | SPANS UP TO 8'-0" (SEE NOTE 1) CONNECTION TYPE (SEE NOTE 3) C1 | C2 | C3 | C4 | C5 | SPANS UP TO 9'-0" (SEE NOTE 1) CONNECTION TYPE (SEE NOTE 3) C1 | C2 | C3 | C4 | C5 | SPANS UP TO 13'-1" (SEE NOTE 1) CONNECTION TYPE (SEE NOTE 3) C1 | C2 | C3 | C4 | C5 |
|---|---|---|---|---|---|---|---|---|---|---|---|---|---|---|---|---|---|---|---|---|---|---|
| WOOD | 1/4"ϕ WOOD LAG W/ 1-3/4" MIN. THREAD PENETRATION SHEAR PARALLEL OR PERP. TO WOOD GRAIN | 45.0 | 12 | 12 | 12 | 9 | 7 | 12 | 12 | 12 | 6 | 5 | 12 | 12 | 12 | 5 | 4 | 12 | 9 | 9 | 3 | 3 |
| | | 57.0 | 12 | 12 | 12 | 7 | 5 | 12 | 12 | 12 | 5 | 3 | 12 | 12 | 12 | 4 | 3 | 12 | 5 | 4 | 3 | — |
| | | 73.0 | 12 | 12 | 12 | 5 | 4 | 12 | 9 | 9 | 3 | 3 | 12 | 6 | 6 | 3 | — | 12 | 5 | 4 | 3 | — |
| | | 105.0 | 12 | 9 | 8 | 3 | 3 | 12 | 5 | 4 | 3 | — | 12 | 5 | 4 | 3 | — | 12 | 5 | 4 | 3 | — |
| | | 170.0 | 12 | 5 | 4 | 3 | — | 12 | 5 | 4 | 3 | — | 12 | 5 | 4 | 3 | — | 12 | 5 | 4 | 3 | — |

SEE PAGE 7 FOR ANCHOR NOTES

PRODUCT REVISED
as complying with the Florida
Buiding Code
Acceptance No 06-0124.01
Expiration Date 05/26/2010
By [signature]
Miami Dade Product Control
Division

Thornton-Tomasetti Group
330 N. Andrews Ave., Suite 450 • Ft. Lauderdale, FL 33301
Tel. (954) 522-3690 • Fax (954) 522-3691 • COA # 7519
Website: www.TheTTGroup.com

Copyright © 2005 Thornton-Tomasetti Group, Inc.
HT100 LICENSED BY HI-TECH SHUTTER GROUP, INC.

HT-100 ALUMINUM ACCORDION SHUTTER

MOSSBROOKS ENTERPRISES INC.
291 LANCE LANE
KEY LARGO, FL 33037
PHONE: 305-453-9512
FAX: 305-453-0740

V.J. Knezevich
Professional Engineer
FL License No.: PE-0010983
NOV 09 2005

| revisions no | date | by | description |
|---|---|---|---|
| 0 | 09/14/05 | VJK | PREVIOUSLY DRAWING NO. 02-458 |

HTSG I.D. # 051109055509D

date 09/14/2005
scale AS NOTED | drawn by MCR
design by VJK | checked by VJK
drawing no. 05-573

# ANCHOR SCHEDULE

**FASTENER MAXIMUM SPACING (INCHES) REQUIRED FOR VARIOUS DESIGN LOADS AND SPANS**

EXIST. STRUC.: HOLLOW CONCRETE BLOCK

| ANCHOR TYPE | LOAD (W) P.S.F. MAX. (SEE NOTE 1) | MIN. 2" EDGE DISTANCE | | | | | | | | | | | | | | | | | | | | MIN. 3" EDGE DISTANCE | | | | | | | | | | | | | | | | | | | |
|---|---|---|---|---|---|---|---|---|---|---|---|---|---|---|---|---|---|---|---|---|---|---|---|---|---|---|---|---|---|---|---|---|---|---|---|---|---|---|---|---|---|
| | | SPANS UP TO 5'-8" (SEE NOTE 1) | | | | | SPANS UP TO 8'-0" (SEE NOTE 1) | | | | | SPANS UP TO 9'-0" (SEE NOTE 1) | | | | | SPANS UP TO 13'-1" (SEE NOTE 1) | | | | | SPANS UP TO 5'-8" (SEE NOTE 1) | | | | | SPANS UP TO 8'-0" (SEE NOTE 1) | | | | | SPANS UP TO 9'-0" (SEE NOTE 1) | | | | | SPANS UP TO 13'-1" (SEE NOTE 1) | | | | |
| | | CONNECTION TYPE (SEE NOTE 3) | | | | | CONNECTION TYPE (SEE NOTE 3) | | | | | CONNECTION TYPE (SEE NOTE 3) | | | | | CONNECTION TYPE (SEE NOTE 3) | | | | | CONNECTION TYPE (SEE NOTE 3) | | | | | CONNECTION TYPE (SEE NOTE 3) | | | | | CONNECTION TYPE (SEE NOTE 3) | | | | | CONNECTION TYPE (SEE NOTE 3) | | | | |
| | | C1 | C2 | C3 | C4 | C5 | C1 | C2 | C3 | C4 | C5 | C1 | C2 | C3 | C4 | C5 | C1 | C2 | C3 | C4 | C5 | C1 | C2 | C3 | C4 | C5 | C1 | C2 | C3 | C4 | C5 | C1 | C2 | C3 | C4 | C5 | C1 | C2 | C3 | C4 | C5 |
| 1/4"Ø ITW TAPCON W/ 1-1/4" MIN. EMBEDMENT | 45.0 | 12 | 12 | 12 | 7 | 4 | 9 | 9 | 9 | 5 | 3 | 8 | 8 | 8 | 4 | | 5 | 3 | 3 | 3 | | 12 | 12 | 12 | 8 | 5 | 10 | 10 | 10 | 6 | 3 | 9 | 9 | 9 | 5 | 3 | 6 | 3 | 3 | 3 | |
| | 57.0 | 10 | 10 | 10 | 5 | 3 | 7 | 7 | 7 | 4 | | 6 | 5 | 5 | 3 | | 4 | | | | | 11 | 11 | 11 | 6 | 4 | 8 | 8 | 8 | 4 | | 7 | 5 | 6 | 4 | | 5 | | | 3 | |
| | 73.0 | 7 | 7 | 7 | 4 | | 5 | 3 | 3 | 3 | | 4 | | | | | 4 | | | | | 8 | 8 | 8 | 5 | 3 | 6 | 3 | 3 | 3 | | 5 | | | 3 | | 5 | | | 3 | |
| | 105.0 | 5 | | | 3 | | 4 | | | | | 4 | | | | | 4 | | | | | 6 | 3 | 3 | 3 | | 5 | | | 3 | | 5 | | | 3 | | 5 | | | 3 | |
| | 170.0 | 4 | | | | | 4 | | | | | 4 | | | | | 4 | | | | | 5 | | | 3 | | 5 | | | 3 | | 5 | | | 3 | | 5 | | | 3 | |
| * 1/4"Ø POWERS CALK-IN W/ 7/8" EMBEDMENT & 1/4-20 STAINLESS STEEL MACHINE SCREW | 45.0 | 12 | 12 | 12 | 7 | 5 | 11 | 11 | 11 | 5 | 3 | 10 | 10 | 10 | 4 | 3 | 7 | 3 | 3 | 3 | | 12 | 12 | 12 | 12 | 7 | 12 | 12 | 12 | 8 | 5 | 12 | 12 | 12 | 7 | 4 | 8 | 4 | 4 | 5 | 3 |
| | 57.0 | 12 | 12 | 12 | 6 | 4 | 9 | 9 | 9 | 4 | | 8 | 6 | 7 | 3 | | 5 | | | | | 12 | 12 | 12 | 9 | 5 | 11 | 11 | 11 | 6 | 4 | 10 | 8 | 9 | 5 | 3 | 7 | | | 4 | |
| | 73.0 | 10 | 10 | 10 | 4 | 3 | 7 | 4 | 3 | 3 | | 6 | | | 3 | | 5 | | | | | 12 | 12 | 12 | 7 | 4 | 9 | 5 | 4 | 5 | 3 | 8 | 3 | 3 | 4 | | 7 | | | 4 | |
| | 105.0 | 7 | 3 | 3 | 3 | | 5 | | | | | 5 | | | | | 5 | | | | | 8 | 4 | 4 | 5 | 3 | 7 | | | 4 | | 7 | | | 4 | | 7 | | | 4 | |
| | 170.0 | 5 | | | | | 5 | | | | | 5 | | | | | 5 | | | | | 7 | | | 4 | | 7 | | | 4 | | 7 | | | 4 | | 7 | | | 4 | |
| 1/4"Ø POWERS ZAMAC NAIL-IN W/ 1-1/8" MIN. EMBEDMENT | 45.0 | 12 | 12 | 12 | 7 | 4 | 8 | 8 | 8 | 5 | 3 | 7 | 7 | 7 | 4 | | 5 | | | 3 | | 12 | 12 | 12 | 9 | 5 | 9 | 9 | 9 | 6 | 3 | 8 | 8 | 8 | 5 | 3 | 6 | 3 | 3 | 3 | |
| | 57.0 | 9 | 9 | 9 | 6 | 3 | 6 | 6 | 6 | 4 | | 6 | 4 | 5 | 3 | | 4 | | | | | 10 | 10 | 10 | 7 | 4 | 7 | 7 | 7 | 5 | | 6 | 5 | 6 | 4 | | 4 | | | 3 | |
| | 73.0 | 7 | 7 | 7 | 4 | | 5 | 3 | | 3 | | 4 | | | | | 4 | | | | | 8 | 8 | 8 | 5 | 3 | 6 | 3 | 3 | 4 | | 5 | | | 3 | | 4 | | | 3 | |
| | 105.0 | 5 | | | 3 | | 4 | | | | | 4 | | | | | 4 | | | | | 5 | 3 | 3 | 3 | | 4 | | | 3 | | 4 | | | 3 | | 4 | | | 3 | |
| | 170.0 | 4 | | | | | 4 | | | | | 4 | | | | | 4 | | | | | 4 | | | 3 | | 4 | | | 3 | | 4 | | | 3 | | 4 | | | 3 | |
| * * 1/4"Ø ELCO MALE/ FEMALE "PANELMATE" W/ 1-1/4 MIN. EMBEDMENT & 1/4-20 MACHINE SCREW WITH NUT | 45.0 | 12 | 12 | 12 | 9 | 5 | 12 | 12 | 12 | 6 | 4 | 11 | 11 | 11 | 5 | 3 | 8 | 4 | 4 | 3 | | 12 | 12 | 12 | 10 | 6 | 12 | 12 | 12 | 7 | 4 | 12 | 12 | 12 | 6 | 4 | 8 | 4 | 4 | 4 | |
| | 57.0 | 12 | 12 | 12 | 7 | 4 | 10 | 10 | 10 | 5 | 3 | 9 | 7 | 8 | 4 | | 6 | | | 3 | | 12 | 12 | 12 | 8 | 5 | 10 | 10 | 10 | 5 | 3 | 9 | 7 | 8 | 5 | 3 | 6 | | | 3 | |
| | 73.0 | 11 | 11 | 11 | 5 | 3 | 8 | 4 | 4 | 3 | | 7 | 3 | 3 | 3 | | 6 | | | 3 | | 12 | 12 | 12 | 6 | 4 | 8 | 4 | 4 | 4 | | 7 | 3 | 3 | 4 | | 6 | | | 3 | |
| | 105.0 | 8 | 4 | 4 | 3 | | 6 | | | 3 | | 6 | | | 3 | | 6 | | | 3 | | 8 | 4 | 4 | 4 | | 6 | | | 3 | | 6 | | | 3 | | 6 | | | 3 | |
| | 170.0 | 6 | | | 3 | | 6 | | | 3 | | 6 | | | 3 | | 6 | | | 3 | | 6 | | | 3 | | 6 | | | 3 | | 6 | | | 3 | | 6 | | | 3 | |
| 1/4" ELCO TEXTRON HEX-FLANGE TAPCON/ HEX HEAD TAPCON W/ 1-1/4" EMBED | 45.0 | 12 | 12 | 12 | 10 | 5 | 11 | 11 | 11 | 7 | 4 | 10 | 10 | 10 | 6 | 3 | 7 | 3 | 3 | 4 | | 12 | 12 | 12 | 12 | 7 | 12 | 12 | 12 | 9 | 5 | 12 | 12 | 12 | 8 | 4 | 8 | 4 | 4 | 5 | 3 |
| | 57.0 | 12 | 12 | 12 | 8 | 4 | 9 | 9 | 9 | 5 | 3 | 8 | 6 | 7 | 5 | | 5 | | | 3 | | 12 | 12 | 12 | 10 | 5 | 11 | 11 | 11 | 7 | 4 | 10 | 8 | 9 | 6 | 3 | 7 | | | 4 | |
| | 73.0 | 10 | 10 | 10 | 6 | 3 | 7 | 4 | 3 | 4 | | 6 | | | 3 | | 5 | | | 3 | | 12 | 12 | 12 | 7 | 4 | 8 | 5 | 4 | 5 | 3 | 7 | 3 | 3 | 4 | | 7 | | | 4 | |
| | 105.0 | 7 | 3 | 3 | 4 | | 5 | | | 3 | | 5 | | | 3 | | 5 | | | 3 | | 8 | 4 | 4 | 5 | 3 | 7 | | | 4 | | 7 | | | 4 | | 7 | | | 4 | |
| | 170.0 | 5 | | | 3 | | 5 | | | 3 | | 5 | | | 3 | | 5 | | | 3 | | 7 | | | 4 | | 7 | | | 4 | | 7 | | | 4 | | 7 | | | 4 | |
| 1/4"Ø ELCO CRETE FLEX W/ 1-1/4" MIN. EMBEDMENT | 45.0 | 12 | 12 | 12 | 10 | 5 | 11 | 11 | 11 | 7 | 4 | 10 | 10 | 10 | 6 | 3 | 7 | 3 | 3 | 4 | | 12 | 12 | 12 | 12 | 7 | 12 | 12 | 12 | 9 | 5 | 12 | 12 | 12 | 8 | 4 | 8 | 4 | 4 | 5 | 3 |
| | 57.0 | 12 | 12 | 12 | 8 | 4 | 9 | 9 | 9 | 5 | 3 | 8 | 6 | 7 | 5 | | 5 | | | 3 | | 12 | 12 | 12 | 10 | 5 | 11 | 11 | 11 | 7 | 4 | 10 | 8 | 9 | 6 | 3 | 7 | | | 4 | |
| | 73.0 | 10 | 10 | 10 | 6 | 3 | 7 | 4 | 3 | 4 | | 6 | | | 3 | | 5 | | | 3 | | 12 | 12 | 12 | 7 | 4 | 8 | 5 | 4 | 5 | 3 | 7 | 3 | 3 | 4 | | 7 | | | 4 | |
| | 105.0 | 7 | 3 | 3 | 4 | | 5 | | | 3 | | 5 | | | 3 | | 5 | | | 3 | | 8 | 4 | 4 | 5 | 3 | 7 | | | 4 | | 7 | | | 4 | | 7 | | | 4 | |
| | 170.0 | 5 | | | 3 | | 5 | | | 3 | | 5 | | | 3 | | 5 | | | 3 | | 7 | | | 4 | | 7 | | | 4 | | 7 | | | 4 | | 7 | | | 4 | |

**ANCHOR NOTES:**

1. **SPANS AND LOADS SHOWN HERE ARE FOR DETERMINING ANCHOR SPACING ONLY. ALLOWABLE STORM SHUTTER SPANS FOR SPECIFIC LOADS MUST BE LIMITED TO THOSE SHOWN IN TABLE 1, PAGE 5.**
2. ENTER ANCHOR SCHEDULE BASED ON THE EXISTING STRUCTURE MATERIAL, ANCHOR TYPE AND EDGE DISTANCE. SELECT DESIGN LOAD GREATER THAN OR EQUAL TO NEGATIVE DESIGN LOAD ON SHUTTER AND SELECT SPAN GREATER THAN OR EQUAL TO SHUTTER SPAN.
3. EXISTING STRUCTURE MAY BE CONCRETE, HOLLOW BLOCK OR WOOD FRAMING. REFERENCE ANCHOR SCHEDULE FOR PROPER ANCHOR TYPE BASED ON TYPE OF EXISTING STRUCTURE AND APPROPRIATE CONNECTION TYPE. SEE MOUNTING SECTION DETAILS FOR IDENTIFICATION OF CONNECTION TYPE.
4. ANCHORS SHALL BE INSTALLED IN ACCORDANCE WITH MANUFACTURERS' RECOMMENDATIONS.
5. MINIMUM EMBEDMENT AND EDGE DISTANCE EXCLUDES WALL FINISH OR STUCCO.
6. WHERE EXISTING STRUCTURE IS WOOD FRAMING, WOOD FRAMING CONDITIONS VARY. FIELD VERIFY THAT FASTENERS ARE INTO ADEQUATE WOOD FRAMING MEMBERS, NOT PLYWOOD. FASTENING TO PLYWOOD IS ACCEPTABLE ONLY FOR SIDE CLOSURE PIECES.
7. WHERE LAG SCREWS FASTEN TO NARROW FACE OF STUD FRAMING, FASTENER SHALL BE LOCATED IN CENTER OF NOMINAL 2" x 4" (MIN.) WOOD STUD. 3/4" EDGE DISTANCE IS ACCEPTABLE FOR WOOD FRAMING. WOOD STUD SHALL BE "SOUTHERN PINE" G=0.55 OR GREATER DENSITY. LAG SCREWS SHALL HAVE PHILLIPS PAN HEAD OR HEX HEAD.
8. MACHINE SCREWS SHALL HAVE MINIMUM OF 1/2" ENGAGEMENT OF THREADS IN BASE ANCHOR AND MAY HAVE EITHER A PAN HEAD, TRUSS HEAD, OR WAFER HEAD (SIDEWALK BOLT), U.O.N.
9. ▨ DESIGNATES ANCHOR CONDITIONS WHICH ARE NOT ACCEPTABLE USES.
10. * DESIGNATES ANCHORS WHICH ARE REMOVABLE BY REMOVING MACHINE SCREW, NUT OR WASHERED WINGNUT.
11. FOR BUILD-OUT MOUNT SECTION (D) ANCHOR SPACING SHALL NOT EXCEED 8-1/2" O.C.
12. FOR BUILD-OUT MOUNT SECTION (E) ANCHOR SPACING SHALL NOT EXCEED 6" O.C.

**PRODUCT REVISED**
as complying with the Florida Buiding Code
Acceptance No. 06-0124.01
Expiration Date 05/26/2010
By Helena A. Melo
Miami Dade Product Control Division


Thornton-Tomasetti Group
330 N. Andrews Ave., Suite 450 • Ft. Lauderdale, FL 33301
Tel. (954) 522-3690 • Fax (954) 522-3691 • COA # 7519
Website: www.TheTTGroup.com



Copyright © 2005 Thornton-Tomasetti Group, Inc.
HT100 LICENSED BY HI-TECH SHUTTER GROUP, INC.


HT-100 ALUMINUM ACCORDION SHUTTER


MOSSBROOKS ENTERPRISES INC.
291 LANCE LANE
KEY LARGO, FL 33037
PHONE: 305-453-9512
FAX: 305-453-0740


V.J. Knezevich
Professional Engineer
FL License No.: PE 0010983

NOV 09 2005

| revisions | | | |
|---|---|---|---|
| no | date | by | description |
| 0 | 09/14/05 | VJK | PREVIOUSLY DRAWING NO. 02-458 |

HTSG I.D. # 051109055 09D

date 09/14/2005
scale AS NOTED
drawn by MCR
design by VJK
checked by VJK
drawing no. 05-573
sheet 7 of 7


Print Information: P:\FL1\KA\CADD\Associations\Hi-Tech\Mossbrooks\05-573\R0-sub\05-573-07.dwg MCantu 11/09/2005 11:56:48am 11/09/05 11:54