MIAMI-DADE COUNTY

BUILDING CODE COMPLIANCE OFFICE (BCCO)
PRODUCT CONTROL DIVISION

MIAMI-DADE COUNTY, FLORIDA
METRO-DADE FLAGLER BUILDING
140 WEST FLAGLER STREET, SUITE 1603
MIAMI, FLORIDA 33130-1563
(305) 375-2901 FAX (305) 375-2908
www.buildingcodeonline.com

NOTICE OF ACCEPTANCE (NOA)

PGT Industries
1070 Technology Drive
Nokomis, FL 34275

SCOPE:
This NOA is being issued under the applicable rules and regulations governing the use of construction materials. The documentation submitted has been reviewed by Miami-Dade County Product Control Division and accepted by the Board of Rules and Appeals (BORA) to be used in Miami Dade County and other areas where allowed by the Authority Having Jurisdiction (AHJ).

This NOA shall not be valid after the expiration date stated below. The Miami-Dade County Product Control Division (In Miami Dade County) and/or the AHJ (in areas other than Miami Dade County) reserve the right to have this product or material tested for quality assurance purposes. If this product or material fails to perform in the accepted manner, the manufacturer will incur the expense of such testing and the AHJ may immediately revoke, modify, or suspend the use of such product or material within their jurisdiction. BORA reserves the right to revoke this acceptance, if it is determined by Miami-Dade County Product Control Division that this product or material fails to meet the requirements of the applicable building code.

This product is approved as described herein, and has been designed to comply with the Florida Building Code, including the High Velocity Hurricane Zone.

DESCRIPTION: Series 1"X Heavy Wall Aluminum Tube Clipped Mullion-L.M.I.

APPROVAL DOCUMENT: Drawing No. **6221**, titled "1" Heavy Wall, Elevations Aluminum Tube Clipped Mullion", sheets 1 through 7 of 7, dated 04/28/00, with last revision on 05/30/06, prepared by PGT Industries, signed and sealed by Robert L. Clark, P.E., bearing the Miami-Dade County Product Control Renewal Stamp with the Notice of Acceptance number and expiration date by the Miami-Dade County Product Control Division.

MISSILE IMPACT RATING: Large and Small Missile Impact

LABELING: Each unit shall bear a permanent label with the manufacturer's name or logo, city, state and following statement: "Miami-Dade County Product Control Approved", unless otherwise noted herein.

RENEWAL of this NOA shall be considered after a renewal application has been filed and there has been no change in the applicable building code negatively affecting the performance of this product.

TERMINATION of this NOA will occur after the expiration date or if there has been a revision or change in the materials, use, and/or manufacture of the product or process. Misuse of this NOA as an endorsement of any product, for sales, advertising or any other purposes shall automatically terminate this NOA. Failure to comply with any section of this NOA shall be cause for termination and removal of NOA.

ADVERTISEMENT: The NOA number preceded by the words Miami-Dade County, Florida, and followed by the expiration date may be displayed in advertising literature. If any portion of the NOA is displayed, then it shall be done in its entirety.

INSPECTION: A copy of this entire NOA shall be provided to the user by the manufacturer or its distributors and shall be available for inspection at the job site at the request of the Building Official.

This NOA **renews and revises NOA # 04-0528.05** and consists of this page 1 and evidence pages E-1 and E-2, as well as approval document mentioned above.

The submitted documentation was reviewed by **Jaime D. Gascon, P.E.**

PRODUCT CONTROL ACCEPTED

J. Gascon
6/28/06

PGT Industries

NOTICE OF ACCEPTANCE: EVIDENCE SUBMITTED

A. DRAWINGS

1. Manufacturer's die drawings and sections.
2. Drawing No **6221**, titled "1" Heavy Wall, Elevations Aluminum Tube Clipped Mullion", Sheets 1 through 7 of 7, dated 04/28/00, with last revision on 05/30/06, prepared by PGT Industries, signed and sealed by Robert L. Clark, P.E.

B. TESTS

1. Test reports on 1) Uniform Load Static Air Pressure Test, per FBC, TAS 202-94
   2) Large Missile Impact Test, FBC, TAS 201-94
   3) Cyclic Loading Test, per FBC, TAS 203-94

   along with installation diagram of a pair of fixed alum. windows (OO configuration) 60" x 54" mulled together with a 1x 2 x std. wall mullion, prepared by Fenestration Testing Laboratory, Inc., Test Report No. **FTL-2902**, dated 01/05/01, signed and sealed by Antonio Acevedo, P.E.
   "Submitted under NOA # 04-0528.05"
2. Test reports on 1) Uniform Load Static Air Pressure Test, per FBC, TAS 202-94
   2) Large Missile Impact Test, FBC, TAS 201-94
   3) Cyclic Loading Test, per FBC, TAS 203-94

   along with installation diagram of a pair of fixed alum. windows (OO configuration) 80" x 76" mulled together with a 1x 4 x std. wall mullion, prepared by Fenestration Testing Laboratory, Inc., Test Report No. **FTL-2903**, dated 01/05/01, signed and sealed by Antonio Acevedo, P.E.
   "Submitted under NOA # 04-0528.05"
3. Test reports on 1) Uniform Load Static Air Pressure Test, per FBC, TAS 202-94
   2) Large Missile Impact Test, FBC, TAS 201-94
   3) Cyclic Loading Test, per FBC, TAS 203-94

   along with installation diagram of a pair of fixed alum. windows with a transom lite (O/OO configuration) mulled together with a 1x 2 x ¾" wall vertical mullion and a 2 x 6" x 1/4" wall horizontal mullion, prepared by Fenestration Testing Laboratory, Inc., Test Report No. **FTL-2975**, dated 01/23/01, signed and sealed by Antonio Acevedo, P.E.
   "Submitted under NOA # 04-0528.05"

C. CALCULATIONS

1. Revised Anchor Calculations and structural analysis, complying with FBC-2004, prepared by PGT Industries, dated 05/30/06, signed and sealed by Robert L. Clark, P.E.

Jaime D. Gascon, P.E.
Chief, Product Control Division
NOA No 06-0125.07
Expiration Date: June 28, 2011
Approval Date: July 20, 2006

NOTICE OF ACCEPTANCE: EVIDENCE SUBMITTED

D. QUALITY ASSURANCE

1. Miami Dade Building Code Compliance Office (BCCO).

E. MATERIAL CERTIFICATIONS

1. None.

F. STATEMENTS

1. Statement letter of conformance and no financial interest, dated January 23, 2006, signed and sealed by Robert L. Clark, P.E.

G. OTHER

1. Notice of Acceptance No. **04-0528.05**, issued to PGT Industries for their 1" x Heavy Wall-Aluminum Tube Clipped Mullion, approved on 07/15/2005 and expiring on 06/28/06.

Jaime D. Gascon, P.E.
Chief, Product Control Division
NOA No 06-0125.07
Expiration Date: June 28, 2011
Approval Date: July 20, 2006

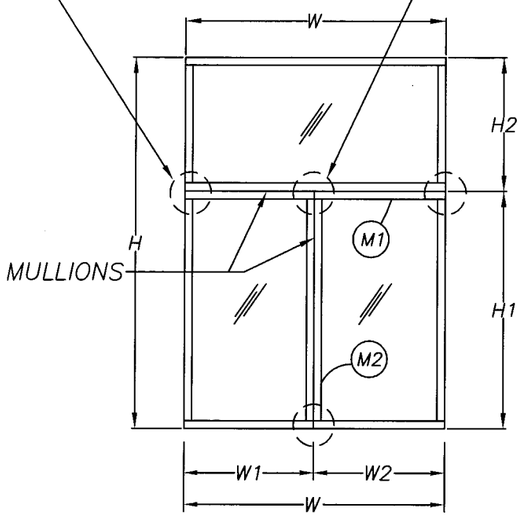

W = W1+W2
H = H1+H2

(2) WINDOWS MULLED W/ONE ABOVE

FOR DETERMINING MAX ALLOWABLE DESIGN PRESSURE SEE TABLES ON PAGES 5, 6 & 7

M1) MAX OPENING = H OR H1+H2
MULL LENGTH = W OR W1+W2

M2) MAX OPENING = W OR W1+W2
MULL LENGTH = H1

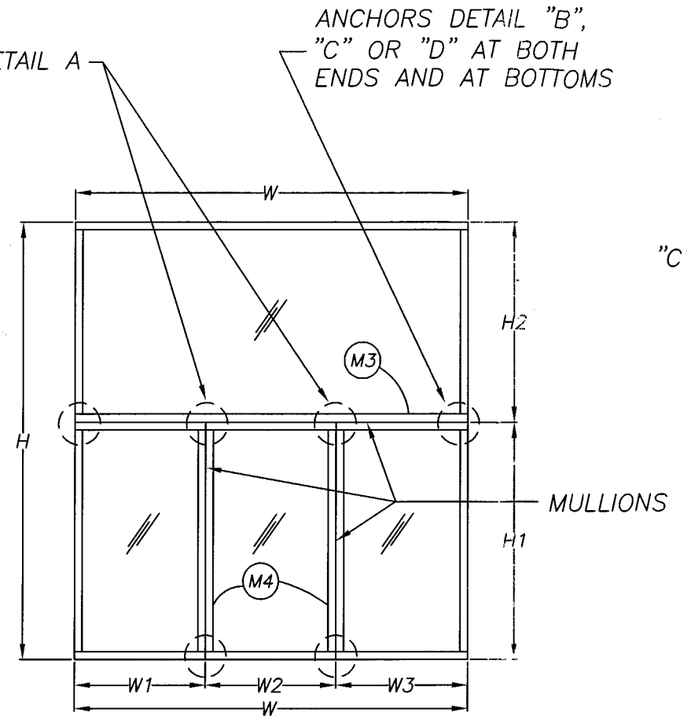

W = W1+W2+W3
H = H1+H2

MULTIPLE WINDOWS MULLED W/ONE ABOVE

FOR DETERMINING MAX ALLOWABLE DESIGN PRESSURE SEE TABLES ON PAGES 5, 6 & 7

M3) MAX OPENING = H OR H1+H2
MULL LENGTH = W OR W1+W2+W3

M4) MAX OPENING = W1+W2 OR W2+W3
MULL LENGTH = H1

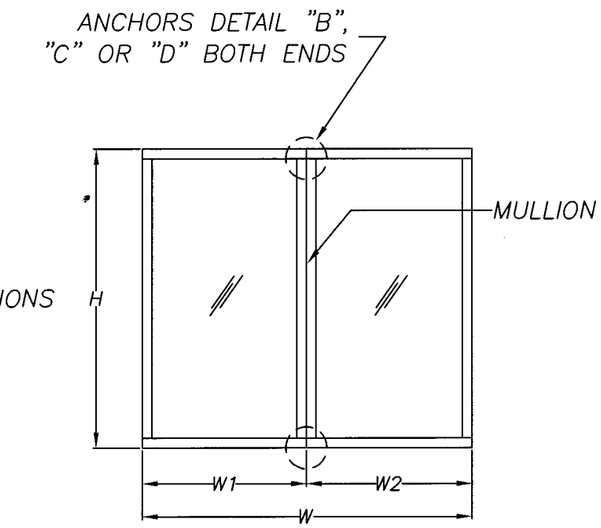

W = W1+W2

(2) WINDOWS MULLED TOGETHER

FOR DETERMINING MAX ALLOWABLE DESIGN PRESSURE SEE TABLES ON PAGES 5, 6 & 7

MAX OPENING = W OR W1+W2
MULL LENGTH = H

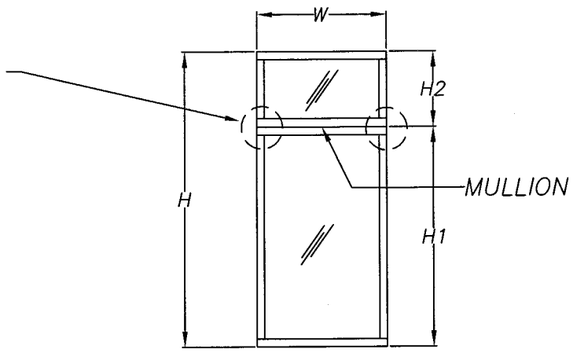

H = H1+H2

(1) WINDOW MULLED W/ONE ABOVE

FOR DETERMINING MAX ALLOWABLE DESIGN PRESSURE SEE TABLES ON PAGES 5, 6 & 7

MAX OPENING = H OR H1+H2
MULL LENGTH = W

PRODUCT RENEWED as complying with the Florida Building Code Acceptance No. 06-0125.07 Expiration Date 06/28/11
By [signature]
Miami Dade Product Control Division

NOTES:

1. THE 33 1/3% STRESS INCREASE HAS NOT BEEN USED IN THE DESIGN OF THIS PRODUCT. FOR ANCHORAGE TYPE, QUANTITY AND LOCATION, REFER TO SHEETS 2, 3, 5, 6 AND 7.
2. WINDOWS AND DOORS OR COMBINATIONS THEREOF MAY BE MULLED TO A MAXIMUM OF (7) UNITS.
3. MULLIONS ARE APPROVED FOR IMPACT AND NON-IMPACT APPLICATIONS.
4. REFERENCE – TEST REPORTS: FTL-2902, 2903 AND 2975.
   ELCO TEXTRON NOA: 04-0721.01, 03-0225.05
   ANSI/AF&PA NDS-2001 FOR WOOD CONSTRUCTION
   ADM-2000 ALUMINUM DESIGN MANUAL
5. THIS PRODUCT HAS BEEN DESIGNED & TESTED TO COMPLY WITH THE REQUIREMENTS OF THE FLORIDA BUILDING CODE, 2004 EDITION FOR THE HIGH VELOCITY HURRICANE ZONE (HVHZ). Δ
6. WOOD BUCKS BY OTHERS, MUST BE ANCHORED PROPERLY TO TRANSFER LOADS TO THE STRUCTURE. Δ

[signature] 5/30/06
Robert L. Clark, P.E.
PE #39712
Structural

TO BE USED ONLY WITH PGT INDUSTRIES PRODUCTS

PGT INDUSTRIES
1070 TECHNOLOGY DRIVE
NOKOMIS, FL 34275
P.O. BOX 1529
NOKOMIS, FL 34274

Revsd By:	Date:	Revisions:
F.K.	5/30/06	D-ADD NOTES 5 & 6
F.K.	5/5/06	C-ADD TECH. REFS.
Drawn By: P.J.P.	Date: 4/28/00	

Description: 1" HEAVY WALL, ELEVATIONS

Title: ALUMINUM TUBE CLIPPED MULLION

Series/Model:	Scale:	Sheet:	Drawing No.	Rev:
MULLS	NTS	1 of 7	6221	D

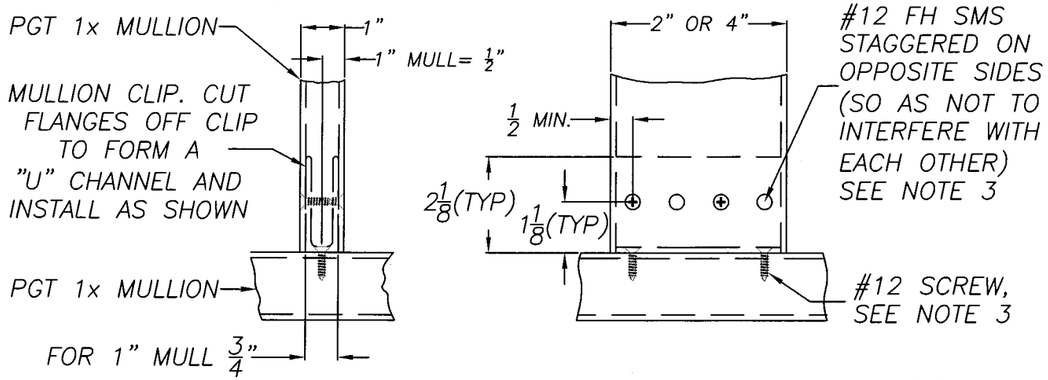

TYPICAL MULLION TO MULLION INSTALLATION, DETAIL "A"

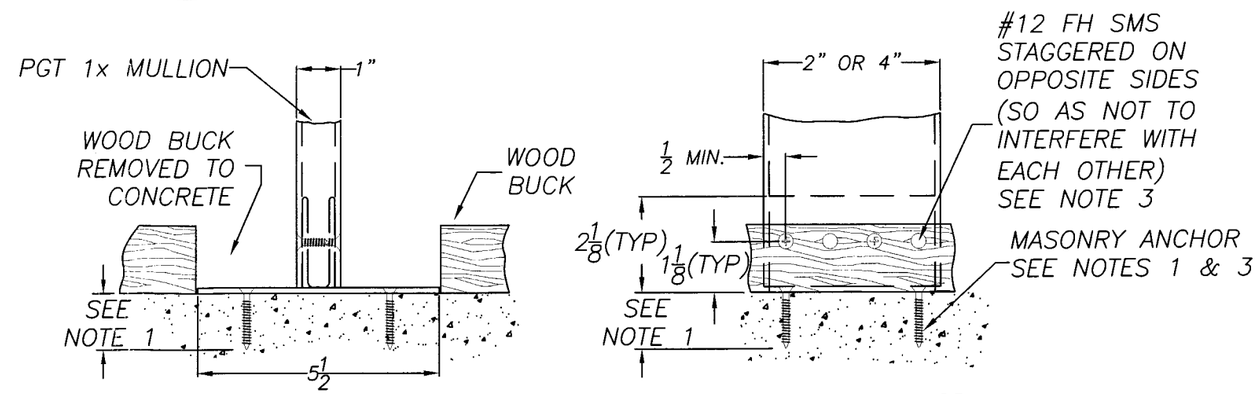

TYPICAL MULLION TO STRUCTURE WITH WOOD BUCK REMOVED FROM CONC., DETAIL "C"

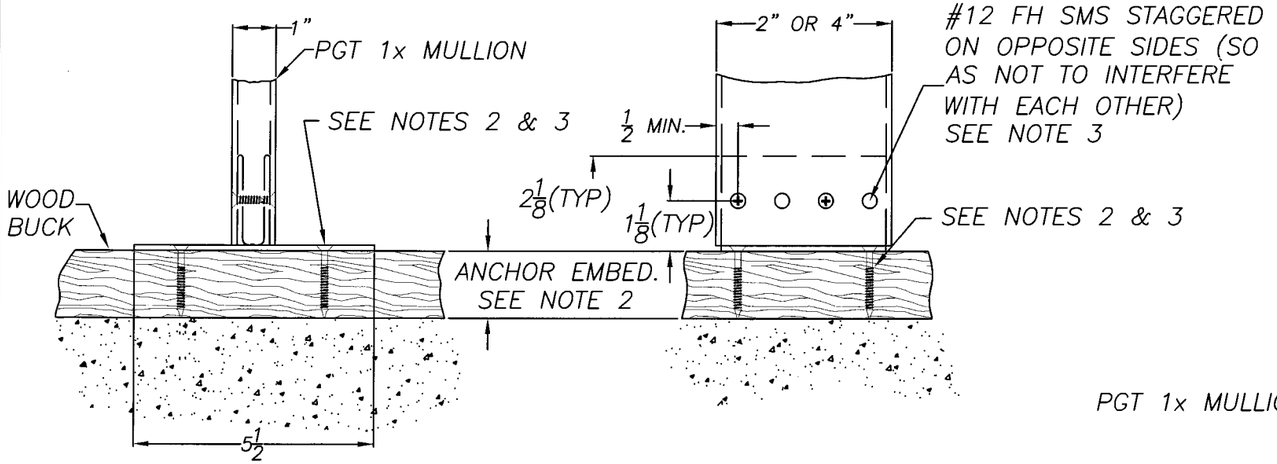

TYPICAL MULLION TO STRUCTURE WITH WOOD BUCK, DETAIL "B"

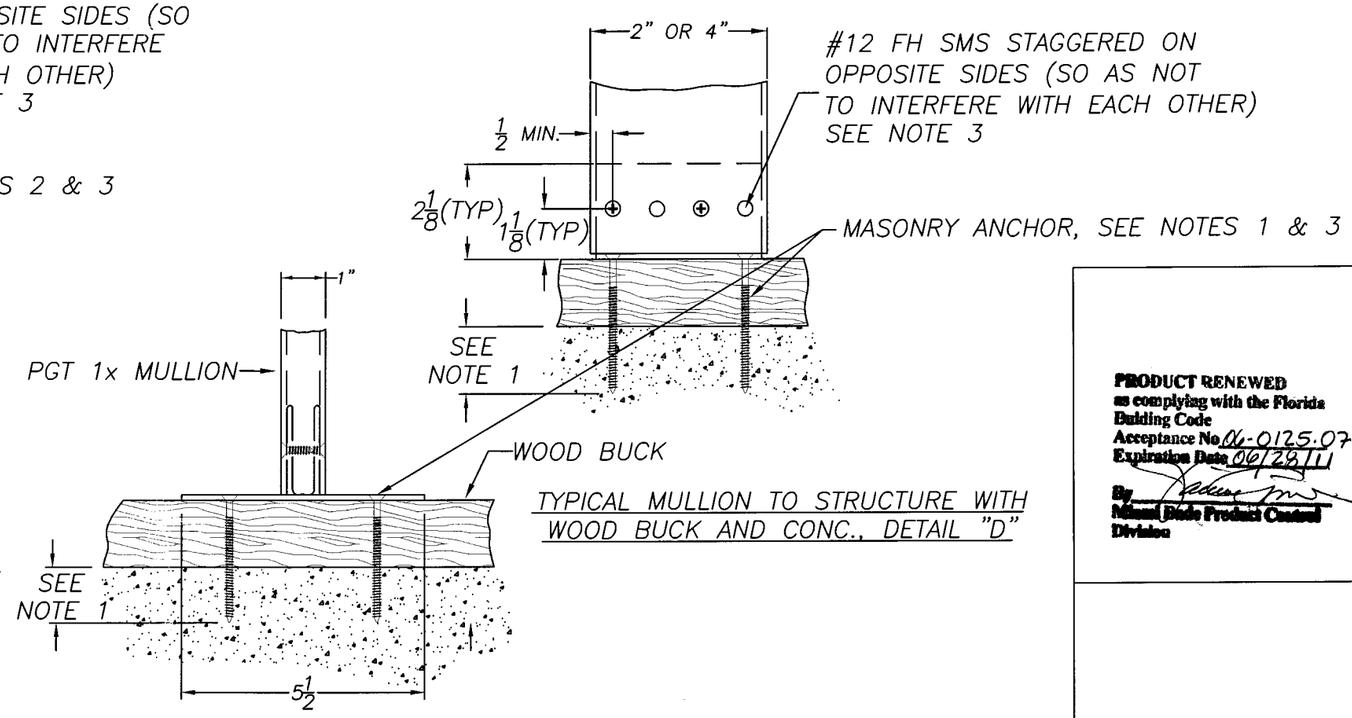

TYPICAL MULLION TO STRUCTURE WITH WOOD BUCK AND CONC., DETAIL "D"

NOTES:

1. FOR CONCRETE APPLICATIONS IN MIAMI-DADE COUNTY, USE ONLY MIAMI-DADE COUNTY APPROVED ELCO 1/4" TAPCONS OR 1/4" SS4 CRETE-FLEX MASONRY ANCHORS. MINIMUM DISTANCE FROM CENTER OF ANCHORS TO CONCRETE EDGE IS 2 1/2". MIN. EMBEDMENT: TAPCONS 1 1/4". CRETE-FLEX 1 3/4"
2. FOR WOOD APPLICATIONS USE #12 SCREWS, ELCO 1/4" TAPCONS OR 1/4" SS4 CRETE-FLEX MASONRY ANCHORS. MIN. EMBEDMENT 1 1/2"
3. ANCHOR EMBEDMENT TO BASE MATERIAL SHALL BE BEYOND WALL DRESSING OR
△D STUCCO.
4. FOR MULL SIZE AND QUANTITY OF ANCHORS SEE SHEETS 5, 6 AND 7. FOR ANCHOR LOCATIONS SEE SHEET 3. QUANTITY OF PINNING SCREWS FOR MULL-TO-CLIP TO BE HALF THE QUANTITY OF ANCHORS FROM CLIP-TO-OPENING (MINIMUM OF 2 SCREWS PER CLIP).
5. IMPORTANT: QUANTITY OF ANCHORS SHOWN ABOVE ARE FOR PICTORIAL REPRESENTATION ONLY. FOR CORRECT QUANTITY OF ANCHORS, REFER TO CHARTS 1 THROUGH 4 ON SHEETS 5, 6 AND 7. FIND THE APPLICABLE MULL SIZE AND PRESSURE REQUIRED FOR YOUR SPECIFIC APPLICATION. ANCHORING
△D OR LOADING CONDITIONS NOT SHOWN IN THESE DETAILS ARE NOT PART OF THIS APPROVAL. ALL STEEL IN CONTACT WITH ALUMINUM TO BE PAINTED OR PLATED.
6. REFERENCE TEST REPORTS: FTL-2902, 2903 AND 2975.

PRODUCT RENEWED as complying with the Florida Building Code
Acceptance No. 06-0125.07
Expiration Date 06/28/11
By
Miami-Dade Product Control Division

TO BE USED ONLY WITH PGT INDUSTRIES PRODUCTS

5/30/06
Robert L. Clark, P.E.
PE #39712
Structural

PGT INDUSTRIES

1070 TECHNOLOGY DRIVE
NOKOMIS, FL 34275

P.O. BOX 1529
NOKOMIS, FL 34274

Revsd By:	Date:	Revisions:
F.K.	5/30/06	D-MODIFY NOTES 3 & 5
F.K.	5/3/04	C-ADD EMBED. DETAILS
Drawn By: P.J.P.	Date: 4/28/00	

Description: 1" HEAVY WALL, CLIP INSTALLATION DETAIL

Title: ALUMINUM TUBE CLIPPED MULLION

Series/Model:	Scale:	Sheet:	Drawing No.	Rev:
MULLS	NTS	2 of 7	6221	D

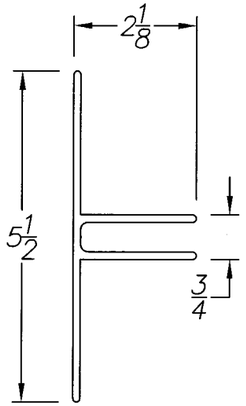

1" MULL CLIP
(CLIP TO OPENING)
EXTRUSION DWG #1099

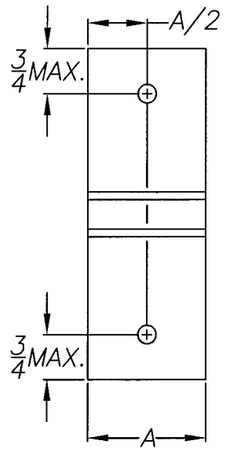

(A) TWO (2) ANCHOR LOCATIONS

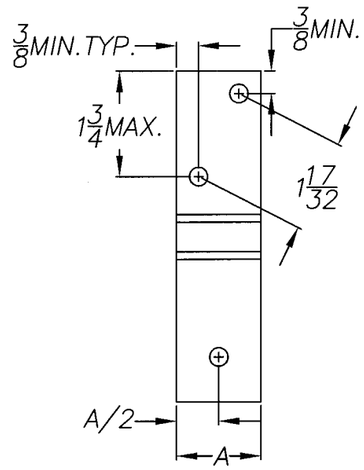

(B) THREE (3) ANCHOR LOCATIONS

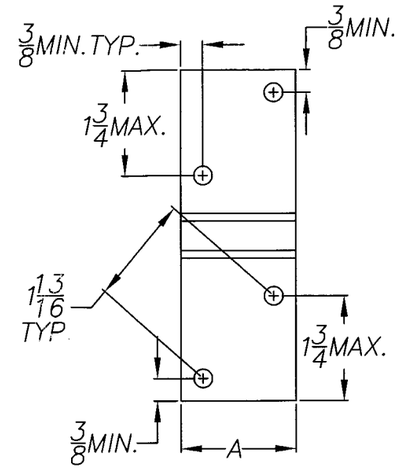

(C) FOUR (4) ANCHOR LOCATIONS

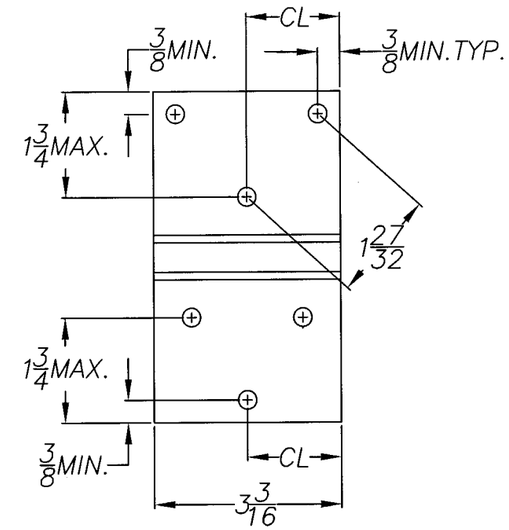

(D) SIX (6) ANCHOR LOCATIONS

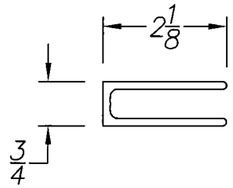

1" MULL CLIP
W/TABS REMOVED
(CLIP TO MULL)
EXTRUSION DWG #1099

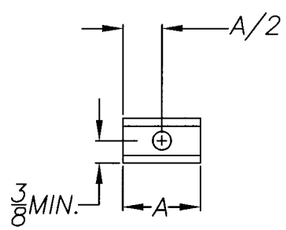

(1) ONE (1) ANCHOR LOCATION

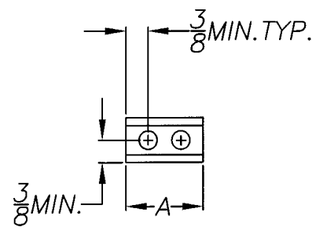

(2) TWO (2) ANCHOR LOCATION

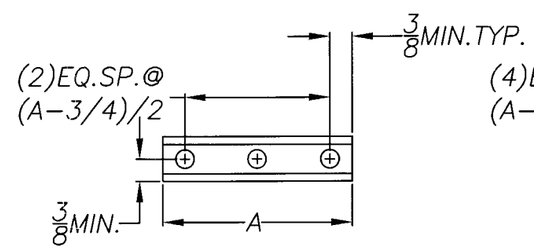

(3) THREE (3) ANCHOR LOCATIONS

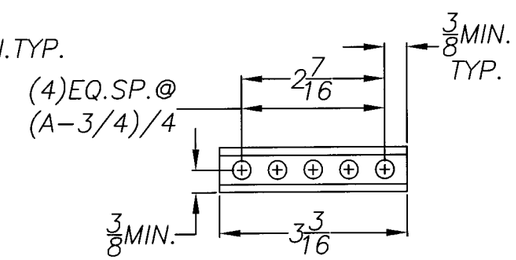

(4) FIVE (5) ANCHOR LOCATIONS

PRODUCT RENEWED
as complying with the Florida
Building Code
Acceptance No. 06-0125.07
Expiration Date 06/28/11
By
Miami Dade Product Control
Division

CLIP LENGTH CHART FOR 1x MULL	
MULL SIZE	'A'
1 x 2 x 3/8	1 3/16
1 x 2 3/4 x 3/8	1 15/16
1 x 2 3/4 x 21/32	1 3/8
1 x 4 x 3/8	3 3/16

NOTES:

1. IMPORTANT: QUANTITY OF ANCHORS SHOWN ARE FOR PICTORIAL REPRESENTATION ONLY. FOR CORRECT QUANTITY OF ANCHORS, PLEASE REFER TO CHARTS 1 THROUGH 4 ON SHEETS 5, 6 AND 7. FIND THE CORRECT MULL SIZE AND PRESSURE REQUIRED FOR YOUR SPECIFIC APPLICATION.
2. 3/8 MIN. EDGE DISTANCE APPLIES TO ALL DIMENSION SHOWN AS MAX.
3. REFERENCE TEST REPORTS: FTL-2902, 2903 AND 2975.

5/30/06
Robert L. Clark, P.E.
PE #39712
Structural

TO BE USED ONLY WITH PGT INDUSTRIES PRODUCTS

PGT INDUSTRIES

1070 TECHNOLOGY DRIVE
NOKOMIS, FL 34275

P.O. BOX 1529
NOKOMIS, FL 34274

Revsd By:	Date:	Revisions:
F.K.	5/30/06	D-NO CHG THIS SHT
F.K.	5/5/06	C-REDRAW, ADD DIM.&NOTE
Drawn By: P.J.P.	Date: 4/28/00	

Description: 1" HEAVY WALL, ANCHOR LOCATIONS

Title: ALUMINUM TUBE CLIPPED MULLION

Series/Model:	Scale:	Sheet:	Drawing No.	Rev:
MULLS	NTS	3 of 7	6221	D

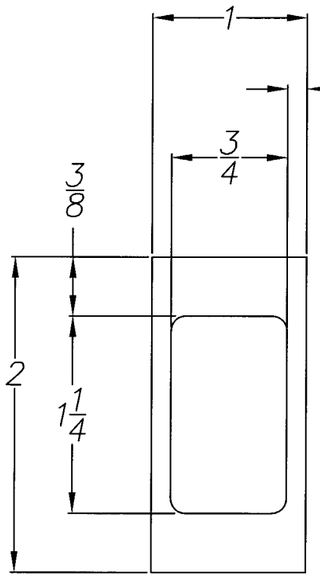

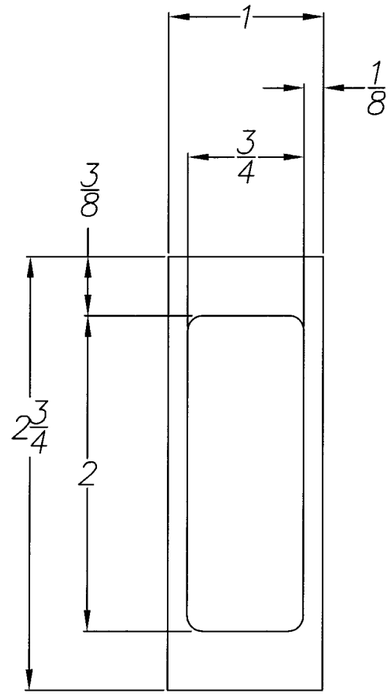

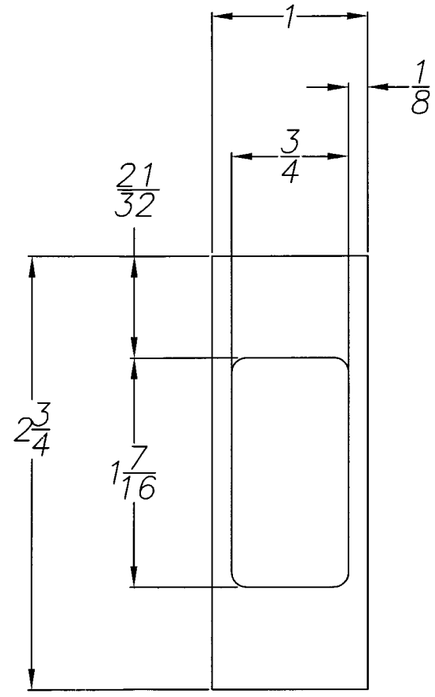

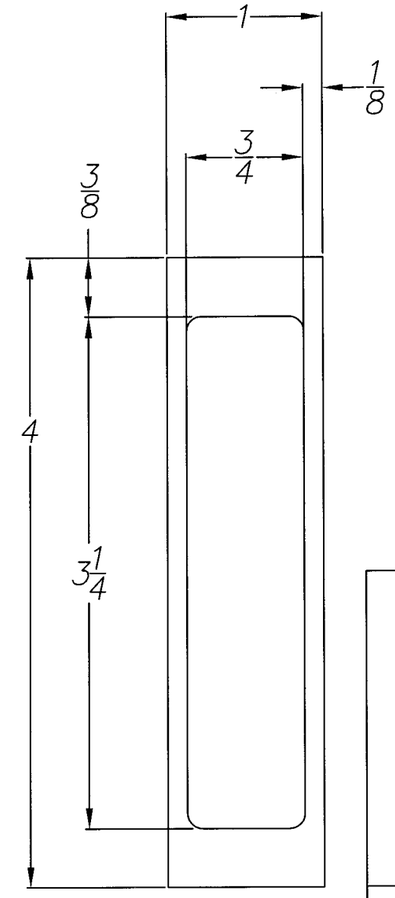

PRODUCT RENEWED
as complying with the Florida
Building Code
Acceptance No 06-0125.07
Expiration Date 06/28/11
By
Miami-Dade Product Control
Division

1x HEAVY WALL MULLS

MAT'L: 6063-T6

TO BE USED ONLY WITH PGT INDUSTRIES PRODUCTS

NOTE:

1. REFERENCE TEST REPORT FTL-2902, 2903 AND 2975

5/30/06
Robert L. Clark, P.E.
PE #39712
Structural

PGT INDUSTRIES

1070 TECHNOLOGY DRIVE
NOKOMIS, FL 34275

P.O. BOX 1529
NOKOMIS, FL 34274

Revsd By:	Date:	Revisions:
F.K.	5/30/06	D-NO CHG THIS SHT
F.K.	5/5/06	C-NO CHG THIS SHT
P.J.P.	4/28/00	

Description: 1" HEAVY WALL, MULLION PROFILES

Title: ALUMINUM TUBE CLIPPED MULLION

Series/Model:	Scale:	Sheet:	Drawing No.	Rev:
MULLS	1X	4 of 7	6221	D

CHART 2. - 1x2.75x.375

QTY. & TYP. ANCHOR	OPENING WIDTH IN INCHES																			
	50		60		70		80		90		100		110		120		130		160	
CLIP TO OPENING	(2) A (3) B	(3) A (3) B	(2) A (3) B	(3) A (3) B	(2) A (3) B	(3) A (3) B	(2) A (3) B	(3) A (3) B	(2) A (3) B	(3) A (3) B	(2) A (3) B	(3) A (4) B	(2) A (3) B	(3) A (4) B	(2) A (3) B	(3) A (4) B	(2) A (3) B	(3) A (4) B	(2) A (3) B	(3) A (4) B
CLIP TO MULL (C)	(3) B	(3) B	(3) B	(3) B	(3) B	(3) B	(3) B	(3) B	(3) B	(3) B	(3) B	(3) B	(3) B	(3) B	(3) B	(3) B	(3) B	(3) B	(3) B	(3) B
MULL LENGTH IN INCHES																				
42	170	170	170	170	170	170	170	170	170	170	170	170	170	170	170	170	170	170	170	170
48	170	170	170	170	161	170	154	170	150	170	149	170	149	170	149	170	149	170	149	170
50.625	170	170	161	170	148	170	140	170	136	170	134	170	134	170	134	170	134	170	134	170
54	166	170	147	170	135	165	126	153	121	146	119	142	118	141	118	141	118	141	118	141
60	145	152	127	131	116	116	101	107	100	100	96	96	93	93	92	92	92	92	92	92
63	131	131	112	112	99	99	90	90	84	84	80	80	77	77	76	76	76	76	76	76
66	113	113	97	97	85	85	77	77	72	72	68	68	65	65	64	64	63	63	63	63
72	86	86	73	73	65	65	58	58	54	54	50	50	48	48	46	46	45	45	44	44
76	73	73	62	62	54	54	49	49	45	45	42	42	40	40	38	38	37	37	36	36
78	67	67	57	57	50	50	45	45	41	41	38	38	36	36	35	35	33	33	32	32
84	54	54	45	45	40	40	35	35	32	32	30	30	28	28	27	27	26	26	24	24
90	43	43	37	37	32	32	28	28	26	26	24	24	22	22	21	21	20	20	19	19
96	36	36	30	30	26	26	23	23	21	21	19	19	18	18	17	17	16	16	15	15
108	25	25	21	21	18	18	16	16	-	-	-	-	-	-	-	-	-	-	-	-
111	23	23	19	19	17	17	15	15	-	-	-	-	-	-	-	-	-	-	-	-

CHART 1. - 1x2x.375

QTY. & TYP. ANCHOR	OPENING WIDTH IN INCHES									
	50	60	70	80	90	100	110	120	130	160
CLIP TO OPENING	(2) A (2) B	(2) A (2) B	(2) A (2) B	(2) A (2) B	(2) A (2) B	(2) A (2) B	(2) A (2) B	(2) A (2) B	(2) A (2) B	(2) A (2) B
CLIP TO MULL (C)	(1) B	(1) B	(1) B	(1) B	(1) B	(1) B	(1) B	(1) B	(1) B	(1) B
MULL LENGTH IN INCHES										
42	155	142	134	130	130	130	130	130	130	130
48	129	116	107	102	100	99	99	99	99	99
50.625	115	100	91	85	82	80	80	80	80	80
54	94	81	73	68	64	63	62	62	62	62
60	67	58	51	47	44	42	41	41	41	41
63	58	49	44	40	37	35	34	34	34	34
66	50	43	38	34	32	30	29	28	28	28
72	38	32	29	26	24	22	21	20	20	20
76	32	27	24	22	20	18	17	17	16	16
78	30	25	22	20	18	17	16	15	15	-
84	24	20	17	16	-	-	-	-	-	-
90	19	16	-	-	-	-	-	-	-	-
96	16	-	-	-	-	-	-	-	-	-

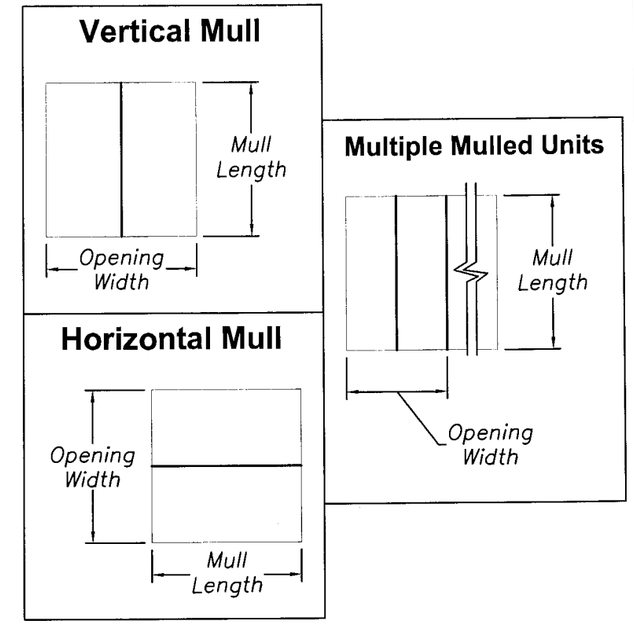

NOTES:

1. MAXIMUM ALLOWABLE PRESSURE IN PSF.
2. DESIGN IS BASED ON OPENING WIDTH. FOR MULTIPLE UNITS, CONSIDER ONLY TWO ADJACENT UNITS AT A TIME. SEE SHEET 1.
3. REFERENCE TEST REPORT FTL-2902, 2903 AND 2975
4. ANCHOR TYPES: A. ELCO 1/4" TAPCONS, EMBED. (1 1/4") OR 1/4" SS4 CRETE-FLEX, EMBED. (1 3/4")
   B. #12 SCREWS
5. SEE ANCHOR SPACING DETAILS SHEET 3.

PRODUCT RENEWED
as complying with the Florida Building Code
Acceptance No. 06-0125.07
Expiration Date 06/23/11
By
Miami Dade Product Control Division

TO BE USED ONLY WITH PGT INDUSTRIES PRODUCTS

5/30/06
Robert L. Clark, P.E.
PE #39712
Structural

PGT INDUSTRIES

1070 TECHNOLOGY DRIVE
NOKOMIS, FL 34275

P.O. BOX 1529
NOKOMIS, FL 34274

Revsd By:	Date:	Revisions:
F.K.	5/30/06	D-NO CHG THIS SHT
F.K.	5/5/06	C-MARKED REVISIONS
Drawn By: P.J.P.	Date: 4/28/00	

Description: 1" HEAVY WALL, PRESSURE CHARTS 1 & 2

Title: ALUMINUM TUBE CLIPPED MULLION

Series/Model:	Scale:	Sheet:	Drawing No.	Rev:
MULLS	NTS	5 of 7	6221	D

CHART 3. - 1x2.75x.650

QTY. & TYP. ANCHOR	OPENING WIDTH IN INCHES																			
	50		60		70		80		90		100		110		120		130		160	
CLIP TO OPENING	(3) B	(2) A (4) B	(3) B	(2) A (4) B	(3) B	(2) A (4) B	(3) B	(2) A (4) B	(3) B	(2) A (4) B	(3) B	(2) A (4) B	(3) B	(2) A (4) B	(3) B	(2) A (4) B	(3) B	(2) A (4) B	(3) B	(2) A (4) B
CLIP TO MULL △C	(2) B	(2) B	(2) B	(2) B	(2) B	(2) B	(2) B	(2) B	(2) B	(2) B	(2) B	(2) B	(2) B	(2) B	(2) B	(2) B	(2) B	(2) B	(2) B	(2) B
MULL LENGTH IN INCHES																				
42	170	170	170	170	170	170	170	170	170	170	170	170	170	170	170	170	170	170	170	170
48	170	170	160	170	148	169	141	161	138	158	137	157	137	157	137	157	137	157	137	157
50.625	166	170	148	169	136	156	129	148	125	143	123	141	123	141	123	141	123	141	123	141
54	152	170	135	155	124	142	116	133	112	128	109	125	108	124	108	124	108	124	108	124
60	133	152	117	134	106	122	99	113	94	107	90	103	88	101	88	100	88	100	88	100
63	125	143	110	126	99	114	92	105	87	99	83	95	81	93	80	91	80	91	80	91
66	118	135	103	118	93	107	86	97	81	90	77	85	75	82	73	80	73	79	73	79
72	106	108	92	92	81	81	73	73	67	67	63	63	60	60	58	58	56	56	56	56
76	91	91	77	77	68	68	61	61	56	56	52	52	49	49	47	47	46	46	45	45
78	84	84	71	71	63	63	56	56	51	51	48	48	45	45	43	43	42	42	40	40
84	67	67	57	57	50	50	44	44	40	40	37	37	35	35	33	33	32	32	30	30
90	54	54	46	46	40	40	36	36	32	32	30	30	28	28	26	26	25	25	23	23
96	44	44	38	38	33	33	29	29	26	26	24	24	23	23	21	21	20	20	18	18
108	31	31	26	26	23	23	20	20	18	18	17	17	15	15	-	-	-	-	-	-
111	29	29	24	24	21	21	18	18	17	17	15	15	-	-	-	-	-	-	-	-

NOTES:

1. MAXIMUM ALLOWABLE PRESSURE IN PSF.
2. DESIGN IS BASED ON OPENING WIDTH. FOR MULTIPLE UNITS, CONSIDER ONLY TWO ADJACENT UNITS AT A TIME. SEE SHEET 1.
3. REFERENCE TEST REPORT FTL-2902, 2903 AND 2975
4. ANCHOR TYPES: A. ELCO 1/4" TAPCONS, EMBED. (1 1/4") OR 1/4" SS4 CRETE-FLEX, EMBED. (1 3/4")
   B. #12 SCREWS
5. SEE ANCHOR SPACING DETAILS SHEET 3.

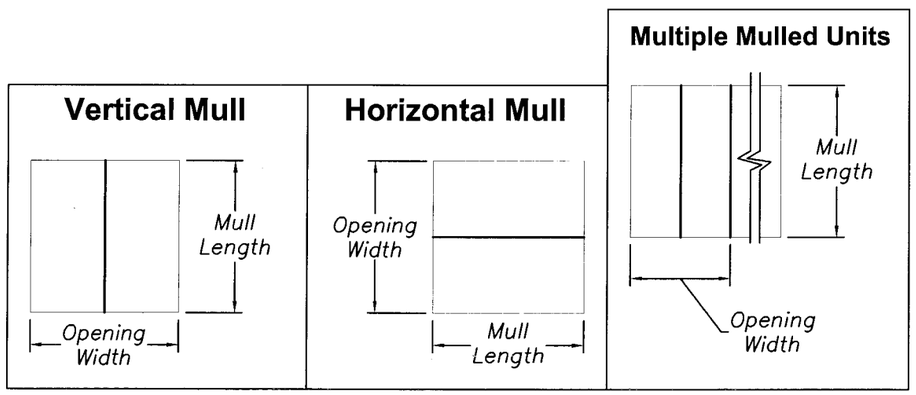

PRODUCT RENEWED as complying with the Florida Building Code Acceptance No 06-0125.07 Expiration Date 06/28/11 By Miami-Dade Product Control Division

TO BE USED ONLY WITH PGT INDUSTRIES PRODUCTS

5/30/06
Robert L. Clark, P.E.
PE #39712
Structural

PGT INDUSTRIES

1070 TECHNOLOGY DRIVE
NOKOMIS, FL 34275

P.O. BOX 1529
NOKOMIS, FL 34274

Revsd By:	Date:	Revisions:
F.K.	5/30/06	D-NO CHG THIS SHT
F.K.	5/5/06	C-MARKED REVISIONS
Drawn By: P.J.P.	Date: 4/28/00	

Description: 1" HEAVY WALL, PRESSURE CHART 3

Title: ALUMINUM TUBE CLIPPED MULLION

Series/Model:	Scale:	Sheet:	Drawing No.	Rev:
MULLS	NTS	6 of 7	6221	D

CHART 4. - 1x4x.375

QTY. & TYP. ANCHOR	OPENING WIDTH IN INCHES																			
	50		60		70		80		90		100		110		120		130		160	
CLIP TO OPENING	(2) A (4) B	(3) A (6) B	(2) A (4) B	(3) A (6) B	(2) A (4) B	(3) A (6) B	(2) A (4) B	(3) A (6) B	(2) A (4) B	(3) A (6) B	(2) A (4) B	(3) A (6) B	(2) A (4) B	(3) A (6) B	(2) A (4) B	(3) A (6) B	(2) A (4) B	(3) A (6) B	(2) A (4) B	(3) A (6) B
CLIP TO MULL △C	(5) B	(5) B	(5) B	(5) B	(5) B	(5) B	(5) B	(5) B	(5) B	(5) B	(5) B	(5) B	(5) B	(5) B	(5) B	(5) B	(5) B	(5) B	(5) B	(5) B
MULL LENGTH IN INCHES																				
42	170	170	170	170	170	170	170	170	170	170	170	170	170	170	170	170	170	170	170	170
48	170	170	170	170	170	170	170	170	170	170	170	170	170	170	170	170	170	170	170	170
50.625	170	170	170	170	170	170	170	170	170	170	170	170	170	170	170	170	170	170	170	170
54	170	170	170	170	170	170	169	170	162	170	158	170	157	170	157	170	157	170	157	170
60	170	170	170	170	154	170	143	170	136	170	131	170	128	170	127	170	127	170	127	170
63	170	170	159	170	144	170	133	170	126	170	121	170	117	169	116	166	116	165	116	165
66	170	170	150	170	135	170	125	170	117	166	112	156	108	150	106	145	105	144	105	144
72	154	170	134	170	120	165	110	148	103	136	98	127	94	120	91	115	89	112	88	111
76	144	170	125	160	112	140	102	126	95	116	90	108	86	102	83	98	81	95	79	93
78	140	170	121	148	108	129	99	116	92	106	87	99	83	93	80	89	78	87	75	84
84	128	138	111	117	98	102	90	92	83	83	77	77	73	73	69	69	66	66	62	62
90	112	112	95	95	82	82	74	74	67	67	62	62	58	58	54	54	52	52	48	48
96	92	92	78	78	67	67	60	60	54	54	50	50	47	47	44	44	42	42	38	38
108	64	64	54	54	47	47	42	42	37	37	34	34	32	32	30	30	28	28	25	25
111	59	59	50	50	43	43	38	38	34	34	31	31	29	29	27	27	26	26	23	23
144	27	27	22	22	19	19	17	17	15	15	-	-	-	-	-	-	-	-	-	-

NOTES:

1. MAXIMUM ALLOWABLE PRESSURE IN PSF.
2. DESIGN IS BASED ON OPENING WIDTH. FOR MULTIPLE UNITS, CONSIDER ONLY TWO ADJACENT UNITS AT A TIME. SEE SHEET 1.
3. REFERENCE TEST REPORT FTL-2902, 2903 AND 2975
4. ANCHOR TYPES: A. ELCO 1/4" TAPCONS, EMBED. (1 1/4") OR 1/4" SS4 CRETE-FLEX, EMBED. (1 3/4")
   B. #12 SCREWS
5. SEE ANCHOR SPACING DETAILS SHEET 3.

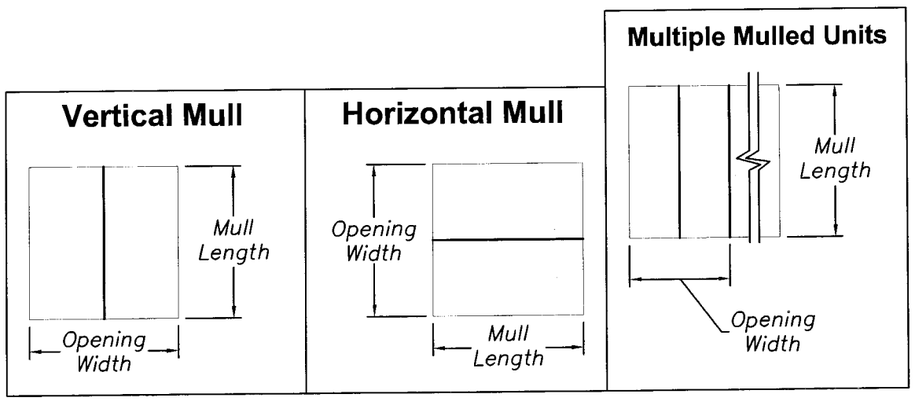

PRODUCT RENEWED as complying with the Florida Building Code Acceptance No. 06-0125.07 Expiration Date 06/28/11 By Miami-Dade Product Control Division

TO BE USED ONLY WITH PGT INDUSTRIES PRODUCTS

5/30/06
Robert L. Clark, P.E.
PE #39712
Structural

PGT INDUSTRIES

1070 TECHNOLOGY DRIVE
NOKOMIS, FL 34275

P.O. BOX 1529
NOKOMIS, FL 34274

Revsd By:	Date:	Revisions:
F.K.	5/30/06	D-NO CHG THIS SHT
F.K.	5/5/06	C-MARKED REVISIONS
Drawn By: P.J.P.	Date: 4/28/00	

Description: 1" HEAVY WALL, PRESSURE CHART 4

Title: ALUMINUM TUBE CLIPPED MULLION

Series/Model:	Scale:	Sheet:	Drawing No.	Rev:
MULLS	NTS	7 of 7	6221	D