MIAMI-DADE COUNTY, FLORIDA
METRO-DADE FLAGLER BUILDING
140 WEST FLAGLER STREET, SUITE 1603
MIAMI, FLORIDA 33130-1563
(305) 375-2901 FAX (305) 375-2908
www.buildingcodeonline.com

BUILDING CODE COMPLIANCE OFFICE (BCCO)
PRODUCT CONTROL DIVISION

NOTICE OF ACCEPTANCE (NOA)

Homeshield Stormguard LLC
3585 E. 10th Court.
Hialeah, FL 33013

SCOPE:

This NOA is being issued under the applicable rules and regulations governing the use of construction materials. The documentation submitted has been reviewed by Miami-Dade County Product Control Division and accepted by the Board of Rules and Appeals (BORA) to be used in Miami Dade County and other areas where allowed by the Authority Having Jurisdiction (AHJ).

This NOA shall not be valid after the expiration date stated below. The Miami-Dade County Product Control Division (In Miami Dade County) and/or the AHJ (in areas other than Miami Dade County) reserve the right to have this product or material tested for quality assurance purposes. If this product or material fails to perform in the accepted manner, the manufacturer will incur the expense of such testing and the AHJ may immediately revoke, modify, or suspend the use of such product or material within their jurisdiction. BORA reserves the right to revoke this acceptance, if it is determined by Miami-Dade County Product Control Division that this product or material fails to meet the requirements of the applicable building code.

This product is approved as described herein, and has been designed to comply with the Florida Building Code, including the High Velocity Hurricane Zone.

DESCRIPTION: 63 mm Extruded Aluminum Roll-Up Shutter

APPROVAL DOCUMENT: Drawing **No. 05-181**, titled "63 mm Extruded Roll-Up Shutters", prepared by Tilteco, Inc. dated 07/01/05, with last revision on 07/01/05, sheets 1 through 14 of 14, signed and sealed by Charles Walter A. Tillit, P.E., bearing the Miami-Dade County Product Control Renewal stamp with the Notice of Acceptance number and expiration date by the Miami-Dade County Product Control Division.

MISSILE IMPACT RATING: Large and Small Missile Impact

LABELING: Each unit shall bear a permanent label with the manufacturer's name or logo, city, state and following statement: "Miami-Dade County Product Control Approved", unless otherwise noted herein.

RENEWAL of this NOA shall be considered after a renewal application has been filed and there has been no change in the applicable building code negatively affecting the performance of this product.

TERMINATION of this NOA will occur after the expiration date or if there has been a revision or change in the materials, use, and/or manufacture of the product or process. Misuse of this NOA as an endorsement of any product, for sales, advertising or any other purposes shall automatically terminate this NOA. Failure to comply with any section of this NOA shall be cause for termination and removal of NOA.

ADVERTISEMENT: The NOA number preceded by the words Miami-Dade County, Florida, and followed by the expiration date may be displayed in advertising literature. If any portion of the NOA is displayed, then it shall be done in its entirety.

INSPECTION: A copy of this entire NOA shall be provided to the user by the manufacturer or its distributors and shall be available for inspection at the job site at the request of the Building Official.

This NOA revises and renews **NOA No. 03-0106.09** and consists of this page 1 and evidence pages E-1 and E2, as well as approval document mentioned above.

The submitted documentation was reviewed by **Jaime D. Gascon, P.E.**

J. Gascon
8/24/06

Homeshield Stormguard LLC

NOTICE OF ACCEPTANCE: EVIDENCE SUBMITTED

A. DRAWING

1. **Drawing No. 05-181, titled "63 mm Extruded Roll-Up Shutters", prepared by Tilteco, Inc. dated 07/01/05, with last revision on 07/01/05, sheets 1 through 14 of 14, signed and sealed by Charles Walter A. Tillit, P.E.**

B. TEST

"Submitted under NOA No. 03-0106.09"

1. Test report on Uniform Static Air Pressure Test per TAS 202 of extruded aluminum roll-up shutters, prepared by Hurricane Engineering & Testing, Inc., Report No. HETI 97-664, dated 09/17/97 signed and sealed by A. Viquar, PE.
2. Test report on Large Missile Impact Test per TAS 201, Cyclic Wind Pressure Test per TAS 203 and Uniform Static Air Pressure Test per TAS 202, of extruded aluminum roll-up shutter, prepared by Hurricane Engineering & Testing, Inc., Report No. HETI 97-656 & 658, dated 08/26/97 & 08/28/97, signed and sealed by H. M. Medina, PE.
3. Test report on Large Missile Impact Test per TAS 201of extruded aluminum roll-up shutter, prepared by Hurricane Engineering & Testing, Inc., Report No. HETI 97-627(Revised) & 681, from 05/09/97 to 07/17/97, signed and sealed by H. M. Medina, PE.
4. Test report on Large Missile Impact Test per TAS 201 and Cyclic Wind Pressure Test per TAS 203 of extruded aluminum roll-up shutter, prepared by Hurricane Engineering & Testing, Inc., Report No. 97-667, 668, 676 & 679, dated from 09/26/97 to 10/20/97, signed and sealed by H. M. Medina, PE.

C. CALCULATIONS

1. Revised comparative analysis for slats; storm bars, headers and anchors using rational analysis dated 07/01/05, prepared by Tilteco Inc., signed and sealed by W. A. Tillit Jr., PE.

D. QUALITY ASSURANCE

1. Miami Dade Building Code Compliance Office (BCCO).

E. MATERIAL CERTIFICATION

"Submitted under NOA No. 03-0106.16"

1. Die Drawings prepared by Werner Co. drawing No. 79746, 47, & 48, dated 05/17/97 & 09/09/96 and signed by B. Stamper
2. Die drawing prepared by Werner Co. drawing No. 79730 & 31, dated 05/17/97 to 10/11/96 and signed by B. Stamper.
3. Tensile Test Report No HETI 97-T57, per ASTM E8, prepared by Hurricane Engineering & Testing, Inc. dated 10/21/97, signed and sealed by H. M. Medina, PE.

Jaime D. Gascon, P.E.
Chief, Product Control Division
NOA No 06-0227.05
Expiration Date: April 30, 2011
Approval Date: September 14, 2006

NOTICE OF ACCEPTANCE: EVIDENCE SUBMITTED

F. STATEMENTS

1 Statement letter of compliance with the Florida Building Code, dated August 10, 2006, signed and sealed by Walter A. Tillit, P.E.

Jaime D. Gascon, P.E.
Chief, Product Control Division
NOA No 06-0227.05
Expiration Date: April 30, 2011
Approval Date: September 14, 2006

GENERAL NOTES:

1. ROLL-UP SHUTTER SHOWN ON THIS PRODUCT APPROVAL DOCUMENT HAS BEEN DESIGNED IN ACCORDANCE WITH THE 2004 EDITION OF THE FLORIDA BUILDING CODE. DESIGN WIND LOADS SHALL BE DETERMINED AS PER SECTION 1620 OF THE ABOVE MENTIONED CODE. IN ORDER TO VERIFY THAT COMPONENTS ON THIS P.A.D. AS TESTED WERE NOT OVER STRESSED, A 33% INCREASE IN ALLOWABLE STRESS FOR WIND LOADS WAS **NOT** USED IN THEIR ANALYSIS. A DURATION FACTOR CD=1.60 WAS USED FOR VERIFICATION OF FASTENERS IN WOOD.

ROLL-UP SHUTTER'S ADEQUACY FOR IMPACT AND FATIGUE RESISTANCE HAS BEEN VERIFIED IN ACCORDANCE WITH SECTION 1609.1.4 OF THE ABOVE MENTIONED CODE AS PER HETI TESTING LAB. REPORTS # 97-T57, 97-627, 97-656, 97-658, 97-664, 97-667, 97-668, 97-676, 97-679 & 97-681. PER TAS 201, 202 & 203 PROTOCOLS.

2. ALL ALUMINUM EXTRUSIONS SHALL BE 6063-T6 ALLOY (UNLESS OTHERWISE NOTED).

3. ALL SCREWS TO BE STAINLESS STEEL 304 OR 316 SERIES W/50 ksi YIELD STRENGTH AND 90 ksi TENSILE STRENGTH.

4. BOLTS TO BE ASTM A-307, GALVANIZED OR AISI 304 SERIES STAINLESS STEEL WITH 36 ksi MINIMUM YIELD STRENGTH.

5. STORM BARS SHOULD REMAIN IN PLACE AT ALL THE TIMES.

6. ANCHORS TO WALL SHALL BE AS FOLLOWS: (UNLESS OTHERWISE NOTED)
(A) TO EXISTING POURED CONCRETE: (f'c = 3320 psi Min.)
- 1/4" ø TAPCON ANCHORS AS MANUFACTURED BY ELCO TEXTRON.

NOTES:
A.1) MINIMUM EMBEDMENT OF TAPCON ANCHORS INTO THE CONCRETE UNIT SHALL BE 1 3/4". NO EMBEDMENT INTO STUCCO SHALL BE CONSIDERED AS PART OF THE REQUIRED EMBEDMENT.

A.2) IN CASE THAT PRECAST STONE, PRECAST CONCRETE PANELS, OR PAVERS BE FOUND ON THE EXISTING WALL OR FLOOR, ANCHORS SHALL BE LONG ENOUGH TO REACH THE MAIN STRUCTURE BEHIND SUCH PANELS. MINIMUN EMBEDMENT SHALL BE 1 3/4".

(B) TO EXISTING CONCRETE BLOCK WALL:
- 1/4" ø TAPCON ANCHORS AS MANUFACTURED BY I.T.W./RAMSET OR ELCO TEXTRON, INC.

NOTES:
B.1) MINIMUM EMBEDMENT OF TAPCON ANCHORS, INTO THE CONCRETE BLOCK UNIT SHALL BE 1 1/4".

B.2) IN CASE THAT PRECAST STONE OR PRECAST CONCRETE PANELS BE FOUND ON THE EXISTING WALL, ANCHORS SHALL BE LONG ENOUGH TO REACH THE MAIN STRUCTURE BEHIND SUCH PANELS. MINIMUM EMBEDMENT SHALL BE 1 1/4".

(C) ANCHORS SHALL BE INSTALLED FOLLOWING ALL OF THE RECOMENDATIONS AND SPECIFICATIONS OF THE ANCHOR'S MANUFACTURER.

7. IT SHALL BE THE RESPONSIBILITY OF THE CONTRACTOR TO VERIFY THE SOUNDNESS OF THE STRUCTURE WHERE SHUTTER IS TO BE ATTACHED TO INSURE PROPER ANCHORAGE.

8. SHUTTER MANUFACTURER'S STAMP LABEL BE PLACED ON THE EXPOSED SURFACE OF THE SIDE RAIL APPROXIMATELY 4" ABOVE THE BOTTOM OF SUCH RAIL. LABEL SHALL READ AS FOLLOWS:

ROLL-UP SHUTTER
HOMESHIELD STORMGUARD, LLC.
HIALEAH, FL.
MIAMI-DADE COUNTY PRODUCT CONTROL APPROVED.

9. ROLL-UP MECHANISM NOT PART OF THIS APPROVAL, BUT SHALL BE CERTIFIED BY AN INDEPENDENT TESTING AGENCY.

10. (A) THIS (P.A.D.) PREPARED BY THIS ENGINEER IS GENERIC AND DOES NOT PROVIDE INFORMATION FOR A SITE SPECIFIC PROJECT; i.e. WHERE THE SITE CONDITIONS DEVIATE FROM THE P.A.D.

(B) CONTRACTOR TO BE RESPONSIBLE FOR THE SELECTION, PURCHASE AND INSTALLATION INCLUDING FROM THE CONDITIONS DETAILED ON THIS DOCUMENT. CONSTRUCTION SAFETY AT SITE IS THE CONTRACTOR'S RESPONSIBILITY.

(C) THIS PRODUCT APPROVAL DOCUMENT WILL BE CONSIDERED INVALID IF ALTERED BY ANY MEANS.

(D) SITE SPECIFIC PROJECTS SHALL BE PREPARED BY A FLORIDA REGISTERED ENGINEER OR ARCHITECT WHICH WILL BECOME THE ENGINEER OF RECORD (E.O.R) FOR THE PROJECT AND WHO WILL BE RESPONSIBLE FOR THE PROPER USE OF THE P.A.D.

(E) THIS P.A.D. SHALL COMPLY WITH SECTION 2: 61G15 OF THE FLORIDA ADMINISTRATIVE CODE.

PRODUCT REVISED
as complying with the Florida
Building Code
Acceptance No 06-0222.05
Expiration Date 04/30/11
By
Miami-Dade Product Control
Division

AUG 09 2005

F.B.C. (HIGH VELOCITY HURRICANE ZONE)

TILTECO INC.
TILLIT TESTING & ENGINEERING COMPANY
6355 N.W. 36th. St., Ste. 305, VIRGINIA GARDENS, Fl. 33166
Phone : (305)871-1530 . Fax : (305)871-1531
EB-0006719
WALTER A. TILLIT Jr., P. E.
FLORIDA Lic. # 44167

63 mm EXTRUDED ROLL-UP SHUTTER

HOMESHIELD STORMGUARD, LLC.
3585 E. 10th. COURT
HIALEAH, FLORIDA 33013
Phone : (305)691-2888 . Fax : (305)691-2244

REV. No	DESCRIPTION	DATE	REV. No	DESCRIPTION	DATE
1	OLD 02-530	7/01/05	-		
2	-	-	-		

DRAWN BY M.C.V.

7/01/05 DATE

05-181 DRAWING No

SHEET 1 OF 14

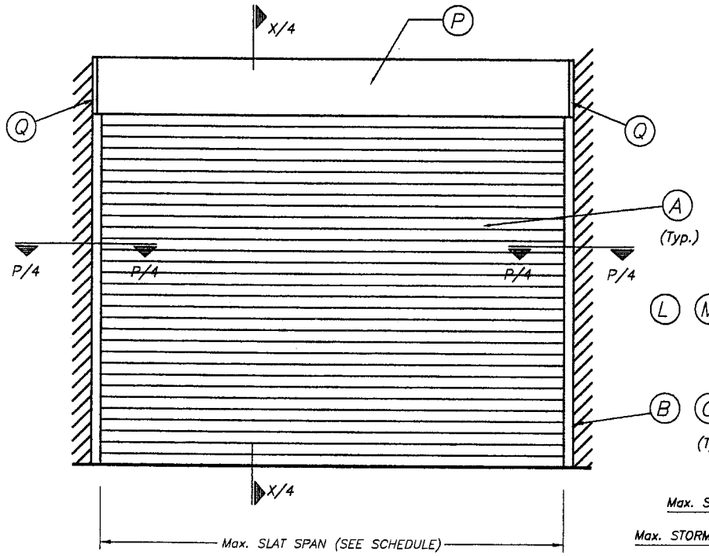

TYPICAL SINGLE UNIT ELEVATION (NO STORM BARS REQUIRED)

NOTE: SEE SHEET 2 & 3 OF 14 FOR COMPONENTS NOMENCLATURE.

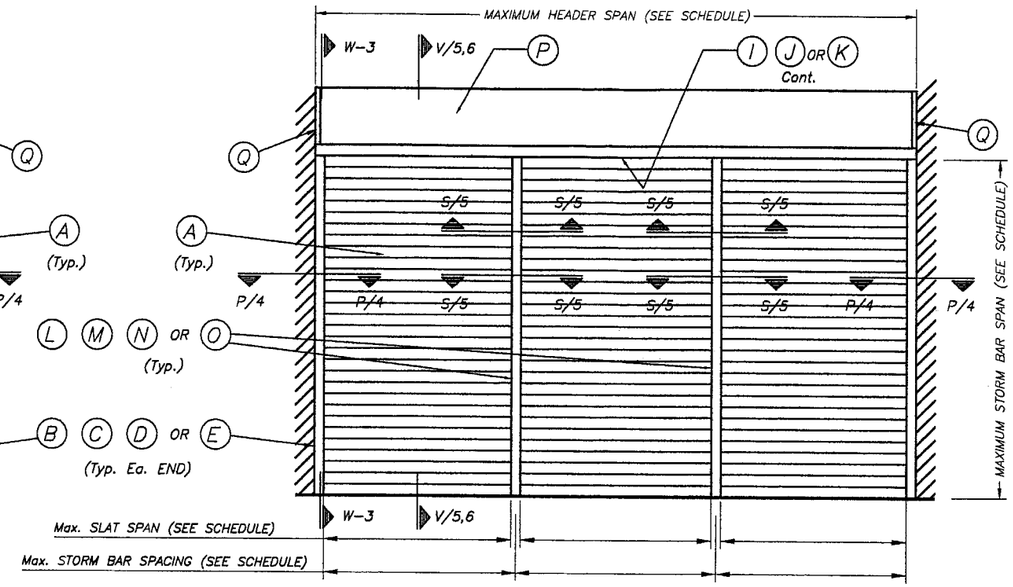

TYPICAL MULTIPLE UNIT ELEVATION (STORM BARS REQUIRED)

NOTE: SEE SHEET 2 & 3 OF 14 FOR COMPONENTS NOMENCLATURE.

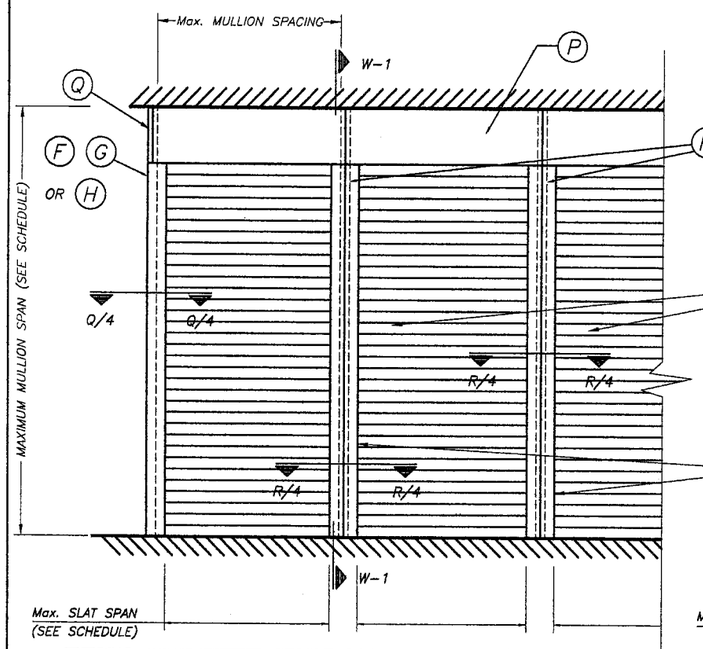

TYPICAL CONSECUTIVE SINGLE UNIT ELEVATION (NO STORM BARS REQUIRED)

NOTE: SEE SHEET 2 & 3 OF 14 FOR COMPONENTS NOMENCLATURE.

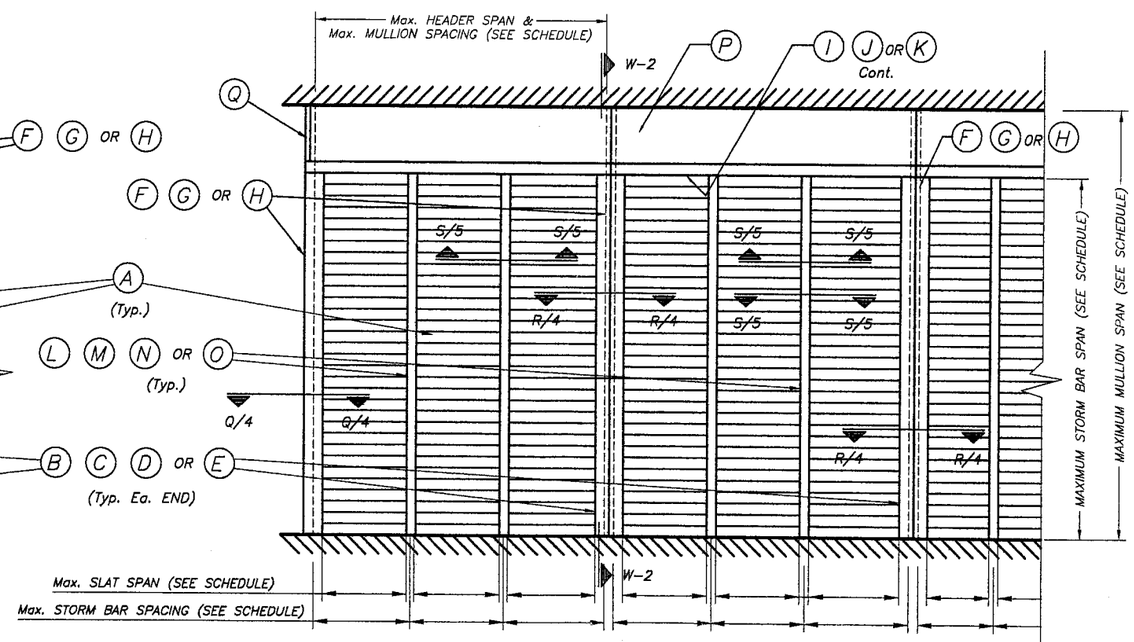

TYPICAL CONSECUTIVE MULTIPLE UNIT ELEVATION (STORM BARS REQUIRED)

NOTE: SEE SHEET 2 & 3 OF 14 FOR COMPONENTS NOMENCLATURE.

PRODUCT REVISED
as complying with the Florida Building Code
Acceptance No 06-0227.05
Expiration Date 04/30/11
By
Miami Dade Product Control Division

F.B.C. (HIGH VELOCITY HURRICANE ZONE)

AUG 09 2005

TILTECO INC.
TILLIT TESTING & ENGINEERING COMPANY
6355 N.W. 36th. St., Ste. 305, VIRGINIA GARDENS, Fl. 33166
Phone : (305)871-1530 . Fax : (305)871-1531
EB-0006719
WALTER A. TILLIT Jr., P. E.
FLORIDA Lic. # 44167

63 mm EXTRUDED ROLL-UP SHUTTER

HOMESHIELD STORMGUARD, LLC.
3585 E. 10th. COURT
HIALEAH, FLORIDA 33013
Phone : (305)691-2888 . Fax : (305)691-2244

REV. No	DESCRIPTION	DATE	REV. No	DESCRIPTION	DATE
1	OLD 02-530	7/01/05	–		
2	–	–	–		

DRAWN BY M.C.V.

7/01/05 DATE

05-181 DRAWING No

SHEET 1A OF 14

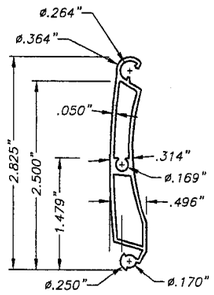

Ⓐ TYPE 1 SLAT
EXTRUDED ALUMINUM SLAT
6063-T6 Alum. ALLOY
SCALE: 1/2" = 1"

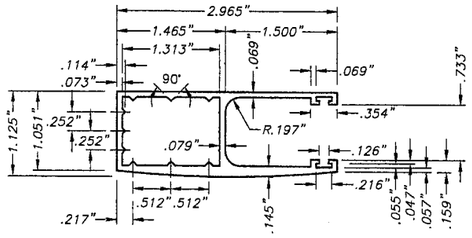

Ⓑ TYPE 1
SIDE RAILS:
6063-T6 Alum. ALLOY
SCALE: 1/2" = 1"

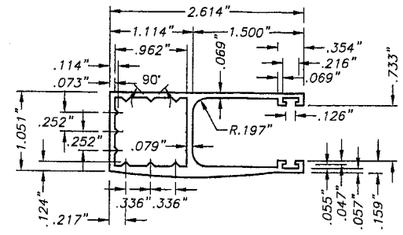

Ⓒ TYPE 2
SIDE RAILS:
6063-T6 Alum. ALLOY
SCALE: 1/2" = 1"

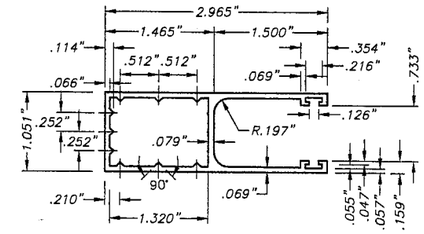

Ⓓ TYPE 3
SIDE RAILS:
6063-T6 Alum. ALLOY
SCALE: 1/2" = 1"

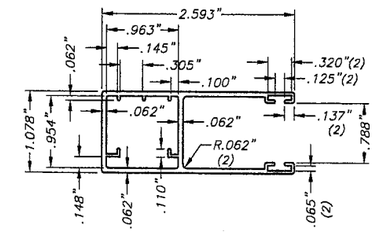

Ⓔ TYPE 4
SIDE RAILS:
6063-T6 Alum. ALLOY
SCALE: 1/2" = 1"

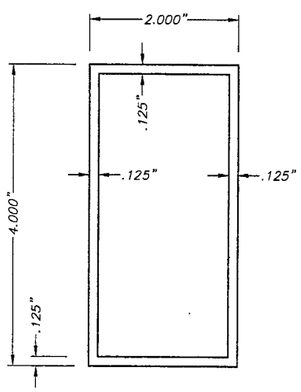

Ⓕ TYPE 1 MULLION:
4" EXTRUDED ALUMINUM
6063-T6 ALUMINUM ALLOY
SCALE: 1/2" = 1"

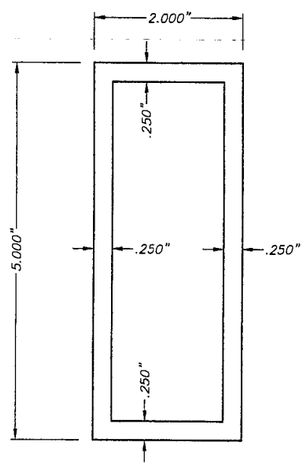

Ⓖ TYPE 2 MULLION:
5" EXTRUDED ALUMINUM
6063-T6 ALUMINUM ALLOY
SCALE: 1/2" = 1"

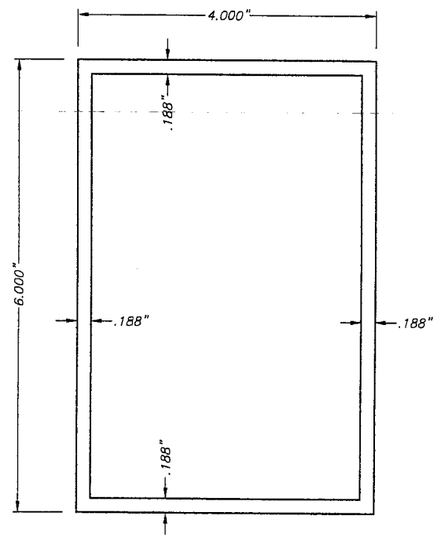

Ⓗ TYPE 3 MULLION:
6" EXTRUDED ALUMINUM
6063-T6 ALUMINUM ALLOY
SCALE: 1/2" = 1"

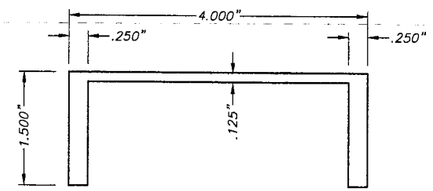

Ⓘ TYPE 1 HEADER:
6063-T6 ALUMINUM ALLOY
SCALE: 1/2" = 1"

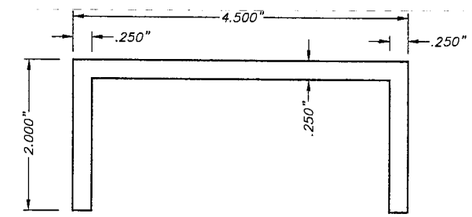

Ⓙ TYPE 2 HEADER:
6063-T6 ALUMINUM ALLOY
SCALE: 1/2" = 1"

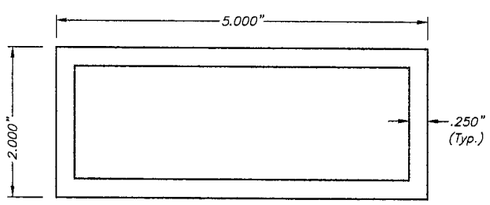

Ⓚ TYPE 3 HEADER:
6063-T6 ALUMINUM ALLOY
SCALE: 1/2" = 1"

PRODUCT REVISED
as complying with the Florida
Building Code
Acceptance No 06-0227.05
Expiration Date 04/30/11
By
Miami-Dade Product Control
Division

F.B.C. (HIGH VELOCITY HURRICANE ZONE)

AUG 09 2005

TILTECO INC.
TILLIT TESTING & ENGINEERING COMPANY
6355 N.W. 36th. St., Ste. 305, VIRGINIA GARDENS, Fl. 33166
Phone : (305)871-1530 . Fax : (305)871-1531
EB-0006719
WALTER A. TILLIT Jr., P. E.
FLORIDA Lic. # 44167

63 mm EXTRUDED ROLL-UP SHUTTER

HOMESHIELD STORMGUARD, LLC.
3585 E. 10th. COURT
HIALEAH, FLORIDA 33013
Phone : (305)691-2888 . Fax : (305)691-2244

REV. No	DESCRIPTION	DATE	REV. No	DESCRIPTION	DATE
1	OLD 02-530	7/01/05	-		
2	-	-	-		

DRAWN BY M.C.V.
7/01/05 DATE
05-181 DRAWING No
SHEET 2 OF 14

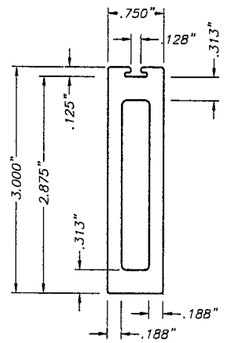

(L) TYPE 1 STORM BAR

EXTRUDED STORM BAR
6063–T6 ALUMINUM ALLOY
SCALE: 1/2" = 1"

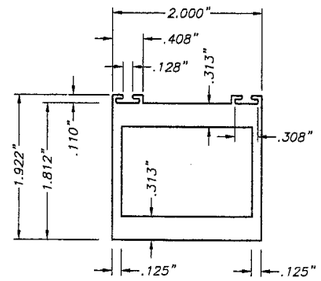

(M) TYPE 2 STORM BAR

EXTRUDED STORM BAR
6063–T6 ALUMINUM ALLOY
SCALE: 1/2" = 1"

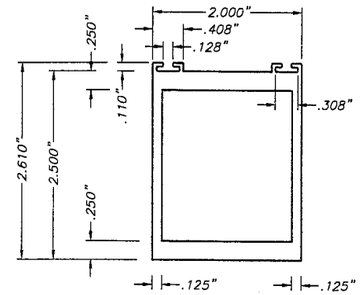

(N) TYPE 3 STORM BAR

2" x 2 1/2" EXTRUDED STORM BAR
6063–T6 ALUMINUM ALLOY
SCALE: 1/2" = 1"

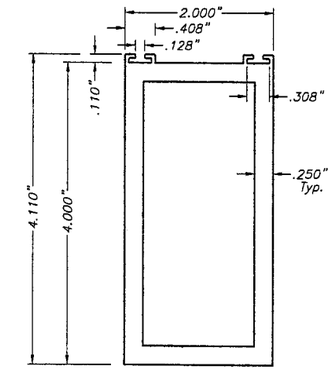

(O) TYPE 4 STORM BAR

2" x 4" EXTRUDED STORM BAR
6063–T6 ALUMINUM ALLOY
SCALE: 1/2" = 1"

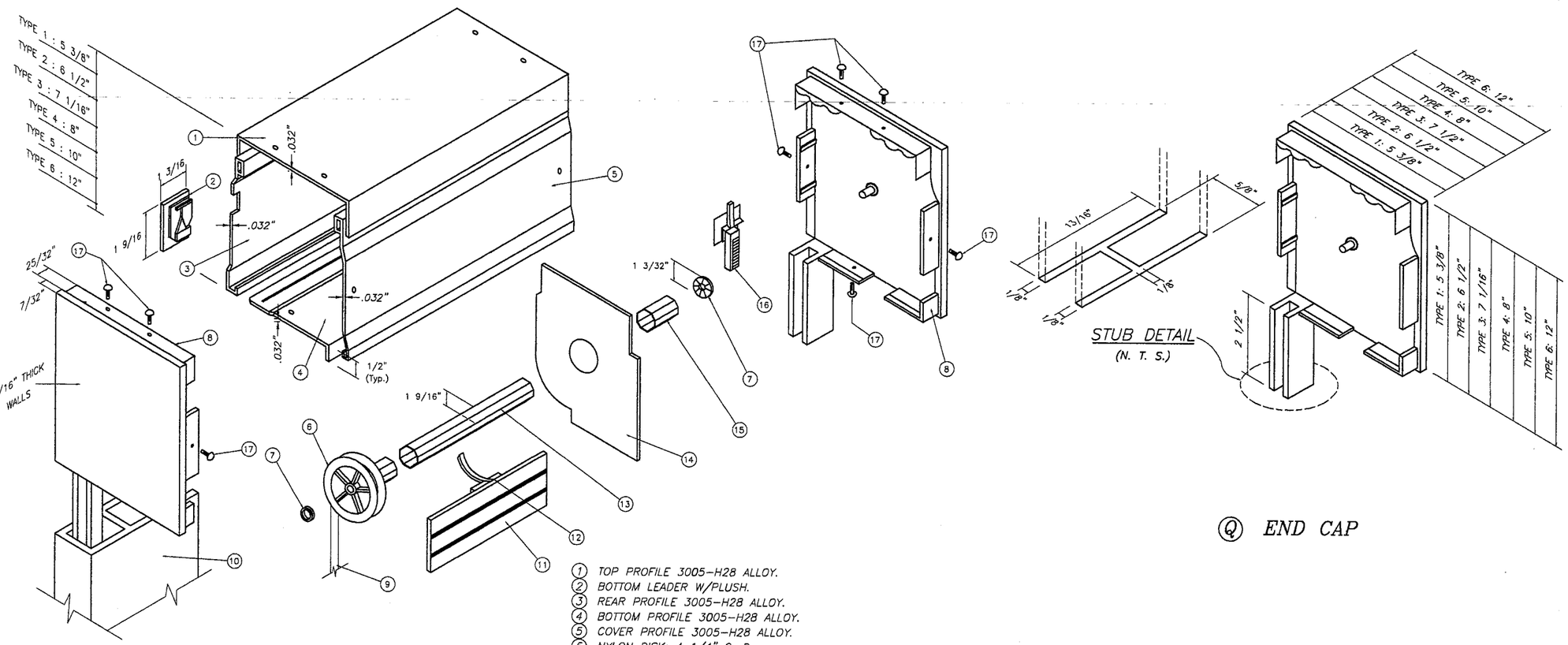

(Q) END CAP

(P) BOX COMPONENTS AND ASSEMBLY DETAIL

1. TOP PROFILE 3005–H28 ALLOY.
2. BOTTOM LEADER W/PLUSH.
3. REAR PROFILE 3005–H28 ALLOY.
4. BOTTOM PROFILE 3005–H28 ALLOY.
5. COVER PROFILE 3005–H28 ALLOY.
6. NYLON DISK: 4 1/4" O. D.
7. ROLLING CUSHION W/BALLS.
8. END CAP: CAST ALUMINUM.
9. RIBBON: 17/32" WIDE.
10. SIDE RAIL.
11. SLAT.
12. EXTRUDED ALUMINUM DRAWING HOOP.
13. GALVANIZED STEEL DRUM: 1 9/16" O. D. x 0.032" Thk.
14. RETAINING METAL PLATE: 26 Ga. Galv. Stl. AT EACH END.
15. NYLON FERRULE: 1 17/32" O. D. x 0.045" Thk. x 3 5/16" Long.
16. NYLON FUNNEL.
17. SCREWS: # 4 x 1/2" S. S.

PRODUCT REVISED
as complying with the Florida Building Code
Acceptance No. 06-0227.05
Expiration Date 04/30/11
By [signature]
Miami Dade Product Control Division

F.B.C. (HIGH VELOCITY HURRICANE ZONE)

AUG 09 2005

TILTECO INC.
TILLIT TESTING & ENGINEERING COMPANY
6355 N.W. 36th. St. Ste. 305, VIRGINIA GARDENS, Fl. 33166
Phone : (305)871–1530 . Fax : (305)871–1531
EB–0006719
WALTER A. TILLIT Jr., P. E.
FLORIDA Lic. # 44167

63 mm EXTRUDED ROLL–UP SHUTTER

HOMESHIELD STORMGUARD, LLC.
3585 E. 10th. COURT
HIALEAH, FLORIDA 33013
Phone : (305)691–2888 . Fax : (305)691–2244

REV. No	DESCRIPTION	DATE	REV. No	DESCRIPTION	DATE
1	OLD 02–530	7/01/05	–		
2	–	–	–		

DRAWN BY M.C.V.
7/01/05 DATE
05–181 DRAWING No
SHEET 3 OF 14

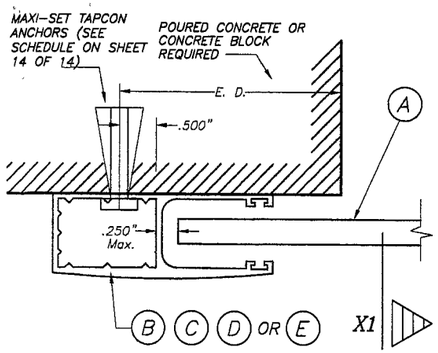

SECTION P – P (1) : WALL MOUNT

SCALE: 1/2" = 1"

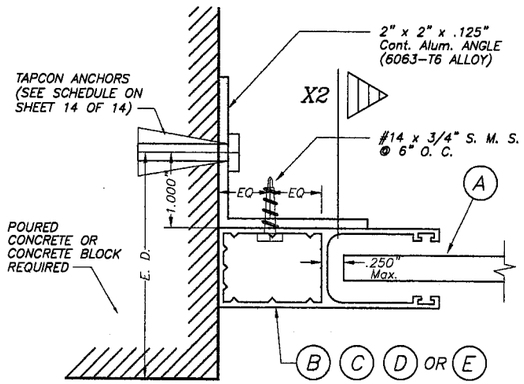

SECTION P – P (2) : SIDE WALL MOUNT

SCALE: 1/2" = 1"

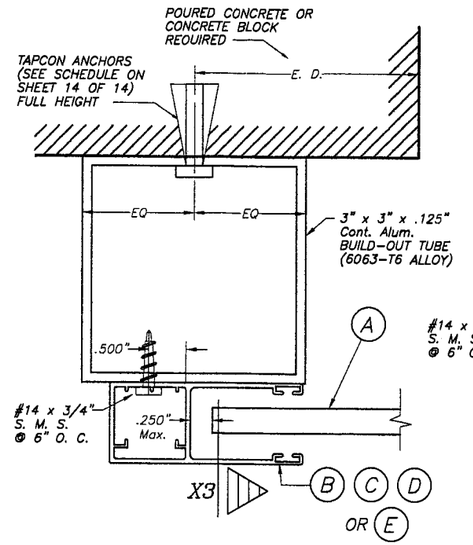

SECTION P – P (3) : BUILD-OUT

SCALE: 1/2" = 1"

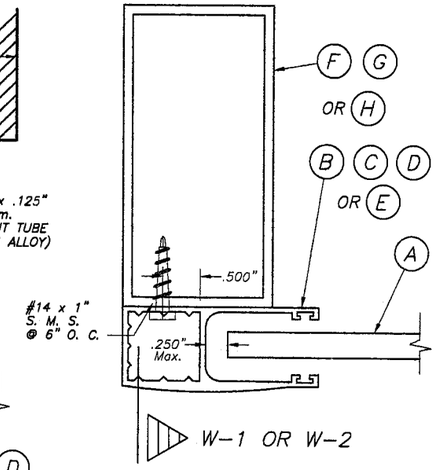

SECTION Q – Q :

MULLION MOUNT (END)

SCALE: 1/2" = 1"

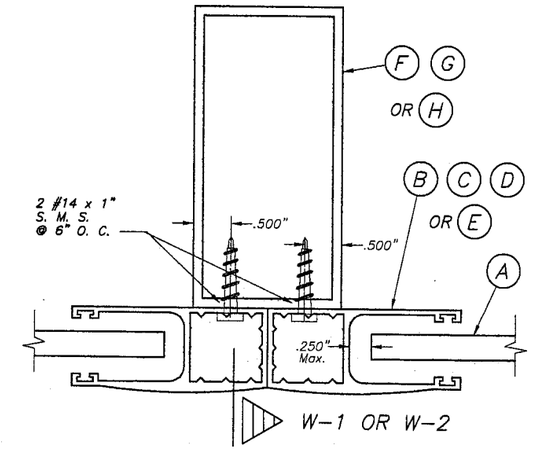

SECTION R – R :

MULLION MOUNT (MULTIPLE)

SCALE: 1/2" = 1"

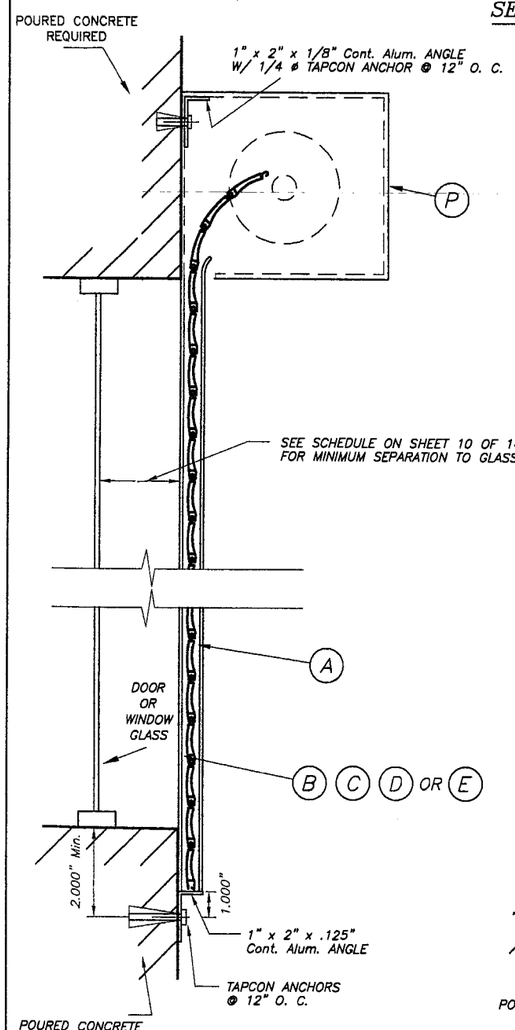

SECTION X – X (1)

N. T. S.

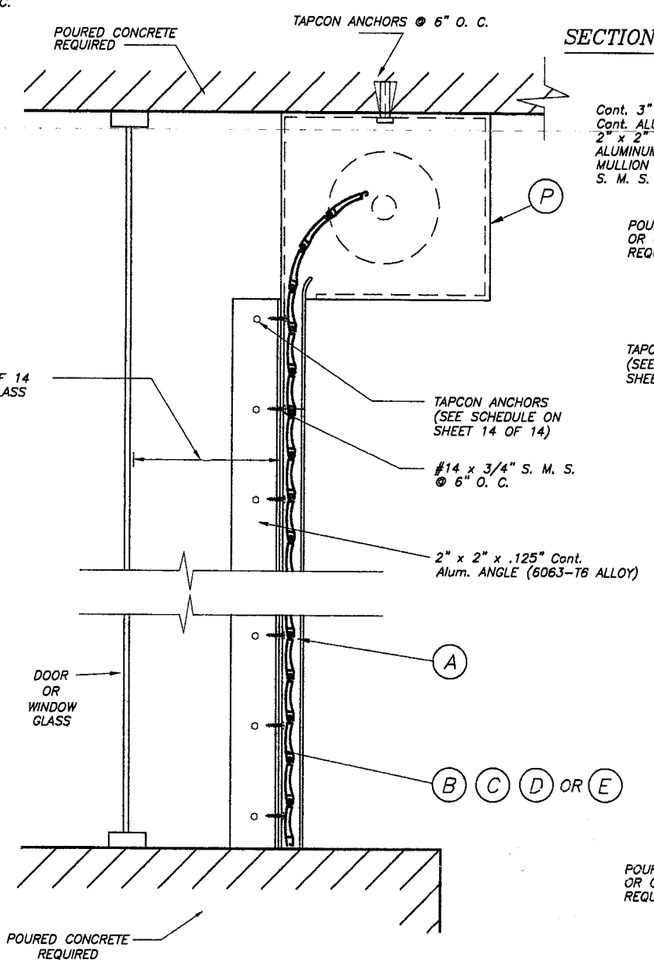

SECTION X –X (2)

N. T. S.

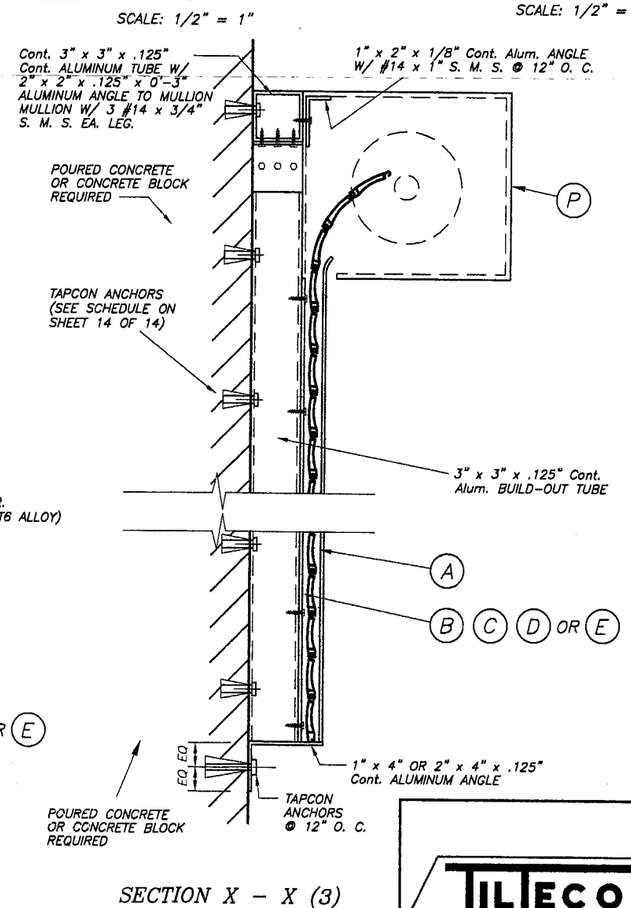

SECTION X – X (3)

N. T. S.

PRODUCT REVISED
as complying with the Florida Building Code
Acceptance No. 06-0227.05
Expiration Date 04/30/11
By
Miami-Dade Product Control Division

F.B.C. (HIGH VELOCITY HURRICANE ZONE)

AUG 09 2005

TILTECO INC.
TILLIT TESTING & ENGINEERING COMPANY
6355 N.W. 36th. St., Ste. 305, VIRGINIA GARDENS, Fl. 33166
Phone : (305)871-1530 . Fax : (305)871-1531
EB-0006719
WALTER A. TILLIT Jr., P. E.
FLORIDA Lic. # 44167

63 mm EXTRUDED ROLL-UP SHUTTER

HOMESHIELD STORMGUARD, LLC.
3585 E. 10th. COURT
HIALEAH, FLORIDA 33013
Phone : (305)691-2888 . Fax : (305)691-2244

REV. No	DESCRIPTION	DATE	REV. No	DESCRIPTION	DATE
1	OLD 02-530	7/01/05	–		
2	–	–	–		

DRAWN BY M.C.V.

7/01/05 DATE

05-181 DRAWING No

SHEET 4 OF 14

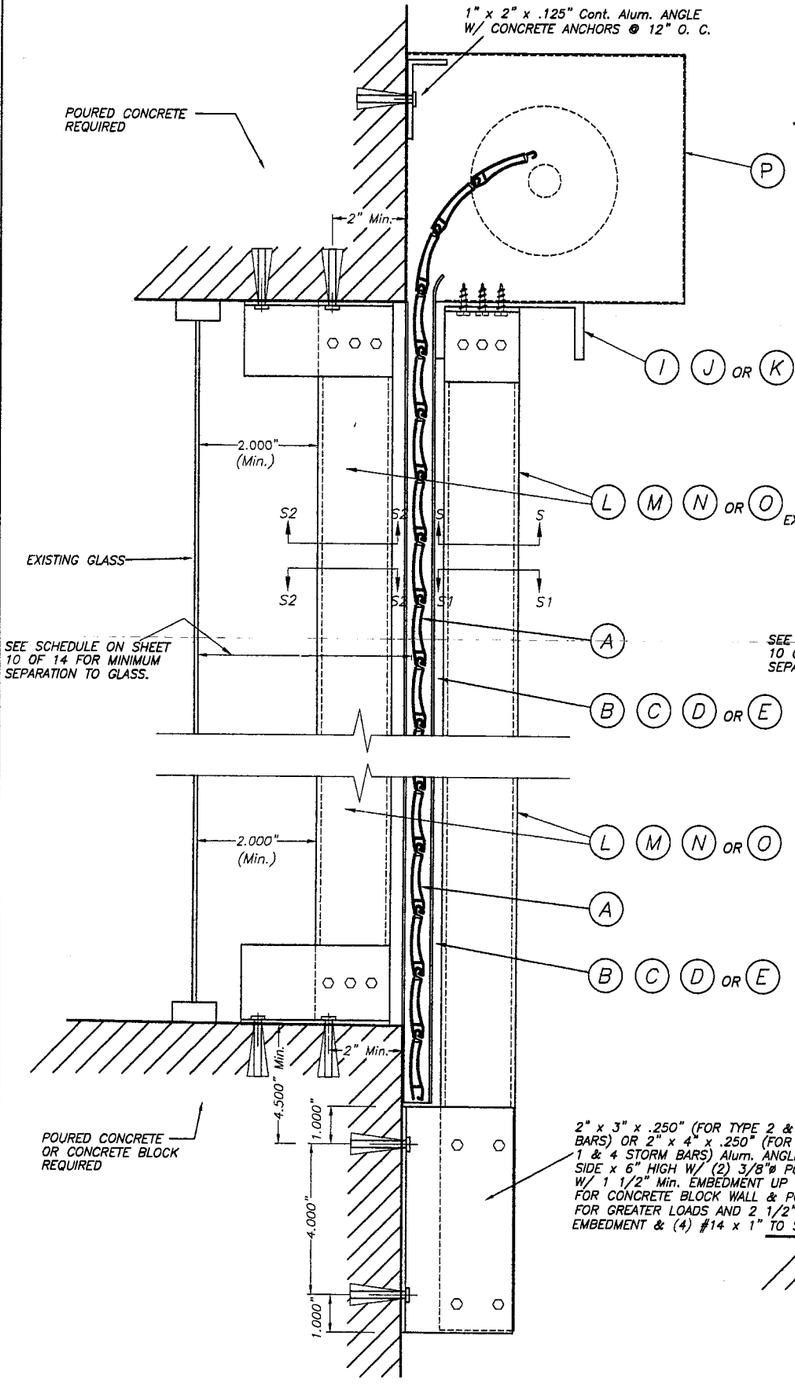

WALL MOUNTING : SECTION V – V (1)

SCALE : 1/4" = 1"

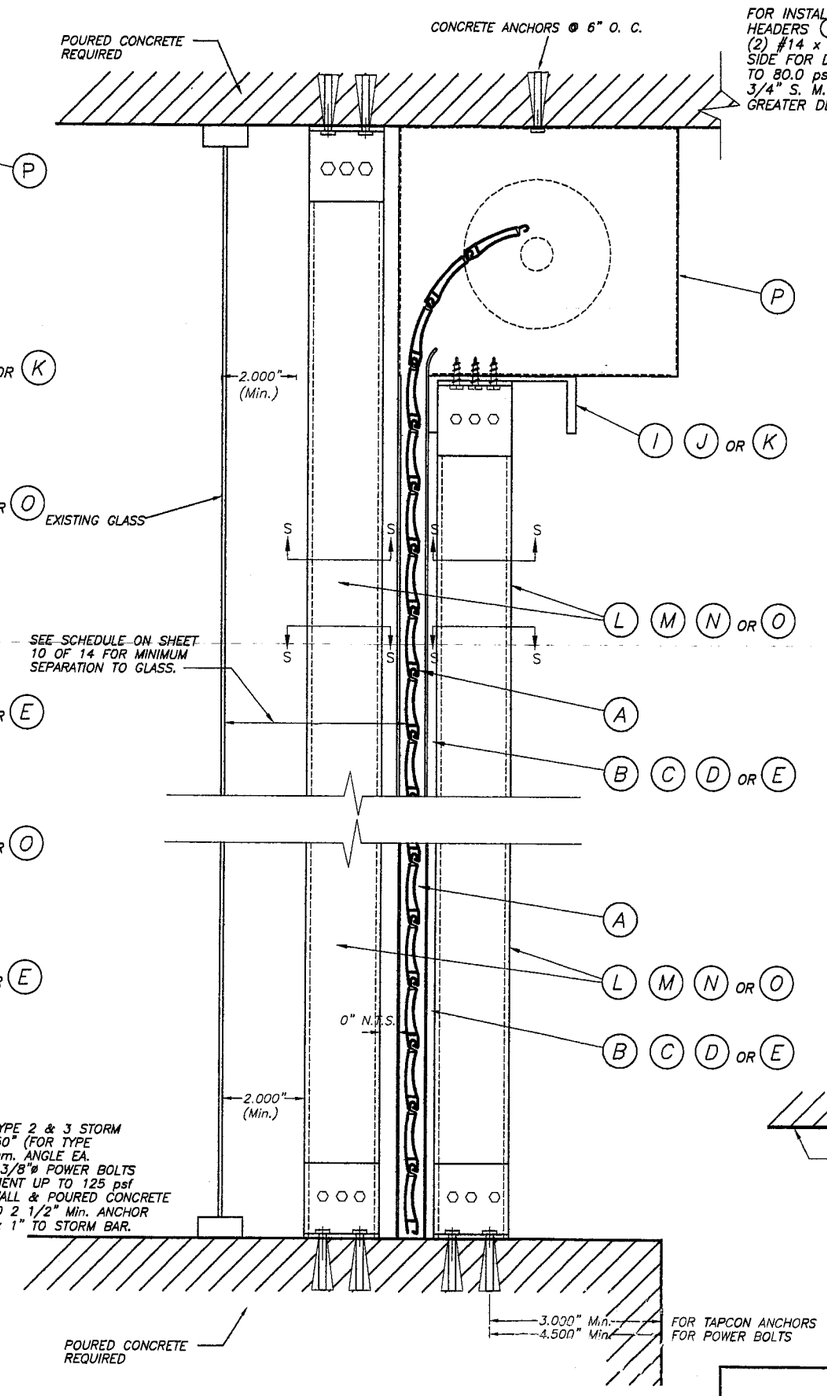

CEILING & FLOOR MOUNTING : SECTION V – V (2)

SCALE : 1/4" = 1"

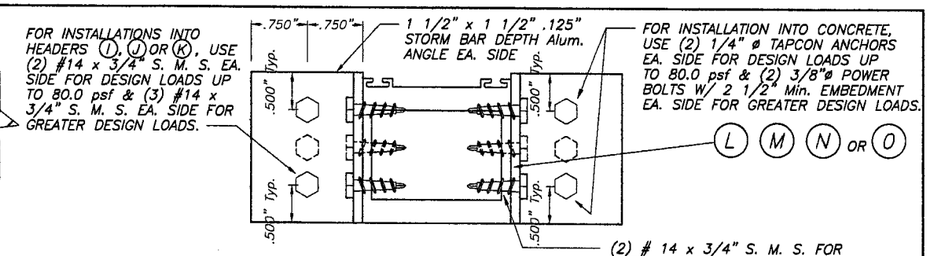

SECTION S – S

SCALE : 1/2" = 1"

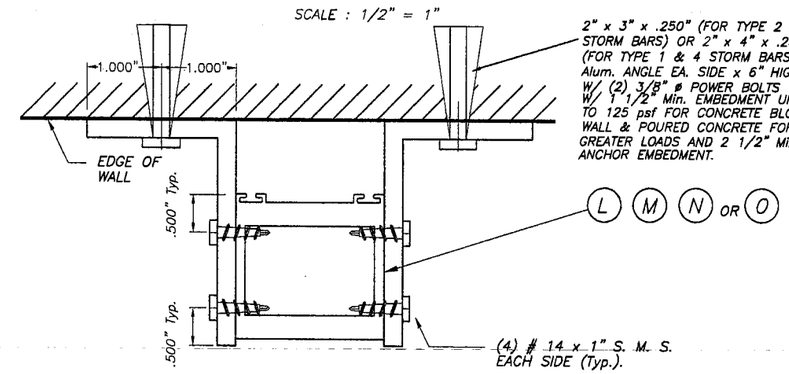

SECTION S1 – S1

SCALE : 1/2" = 1"

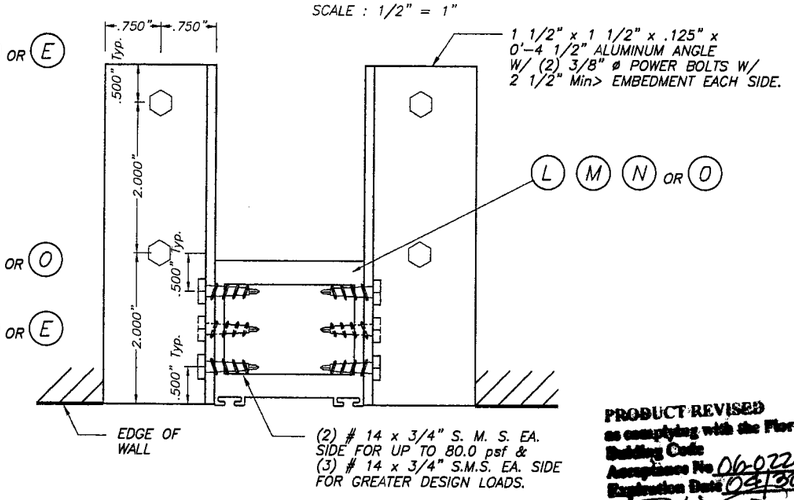

SECTION S2 – S2

SCALE : 1/2" = 1"

PRODUCT REVISED
as complying with the Florida Building Code
Acceptance No. 06-0227.05
Expiration Date 04/30/11
By
Miami-Dade Product Control Division

F.B.C. (HIGH VELOCITY HURRICANE ZONE)

TILTECO INC.
TILLIT TESTING & ENGINEERING COMPANY
6355 N.W. 36th. St., Ste. 305, VIRGINIA GARDENS, Fl. 33166
Phone : (305)871-1530 . Fax : (305)871-1531
EB-0006719
WALTER A. TILLIT Jr., P. E.
FLORIDA Lic. # 44167

63 mm EXTRUDED ROLL-UP SHUTTER

HOMESHIELD STORMGUARD, LLC.
3585 E. 10th. COURT
HIALEAH, FLORIDA 33013
Phone : (305)691-2888 . Fax : (305)691-2244

REV. No	DESCRIPTION	DATE	REV. No	DESCRIPTION	DATE
1	OLD 02-530	7/01/05	–		
2	–	–	–		

DRAWN BY M.C.V.
7/01/05 DATE
05-181 DRAWING No
SHEET 5 OF 14

AUG 09 2005

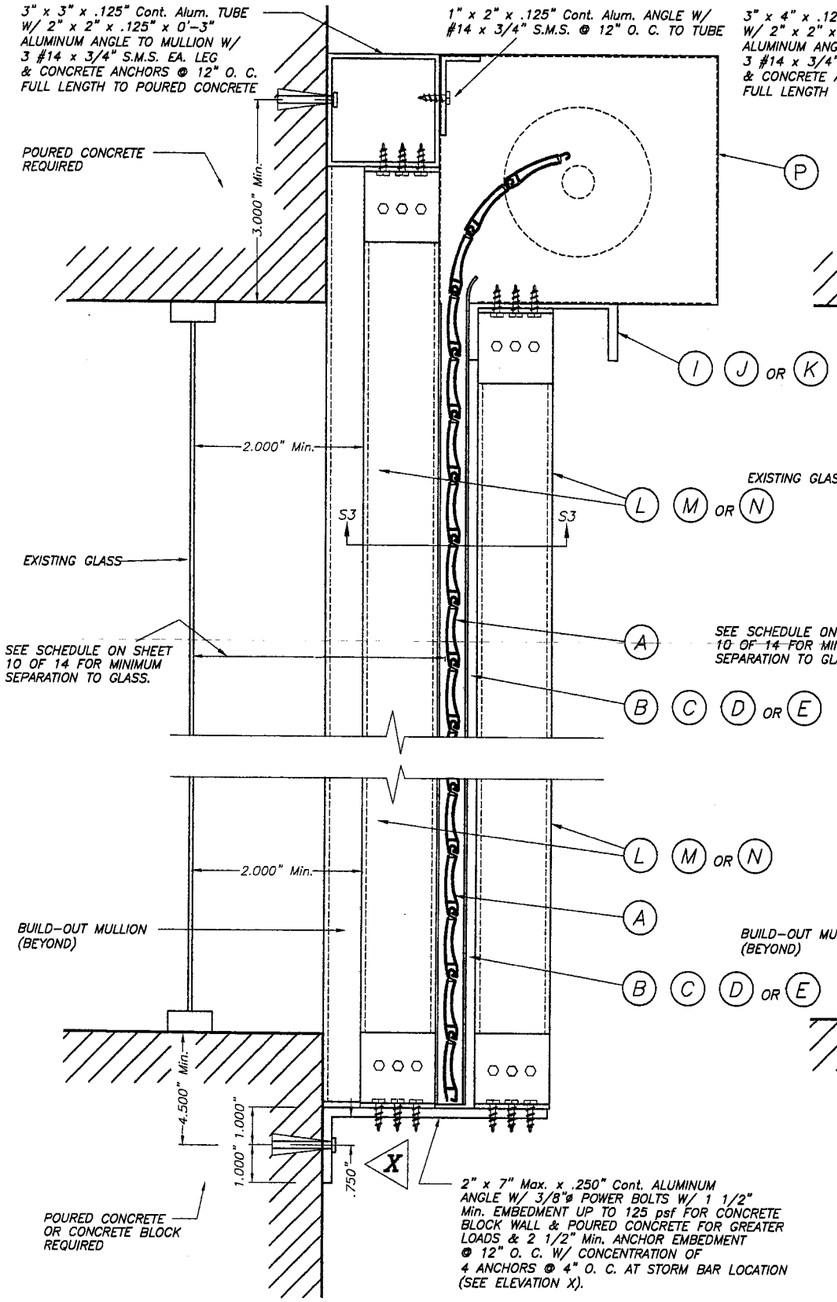

CASE I

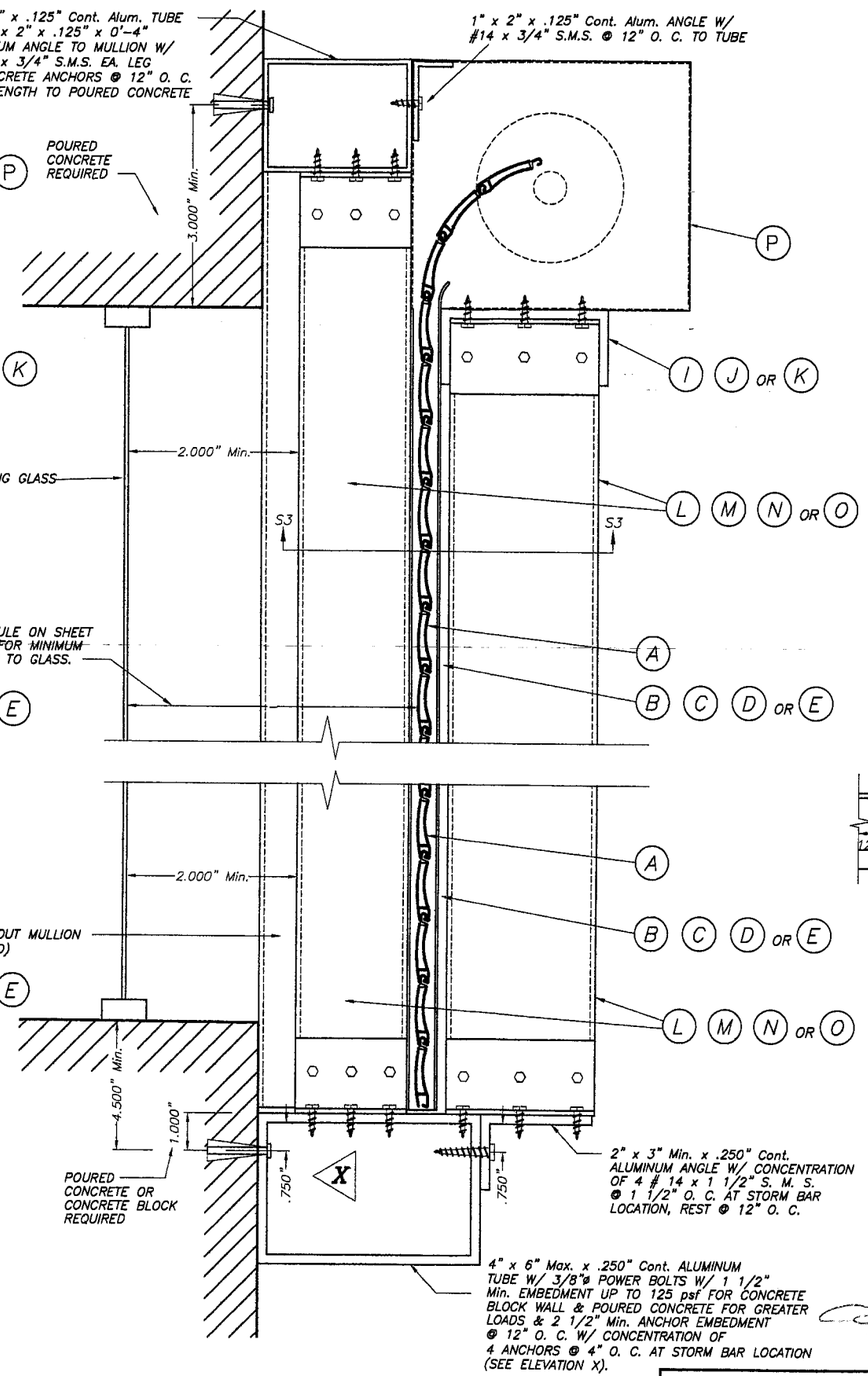

CASE II

STORM BAR CONNECTION AT BUILD-OUT INSTALLATION : SECTIONS V – V (3)

SCALE : 1/4" = 1"

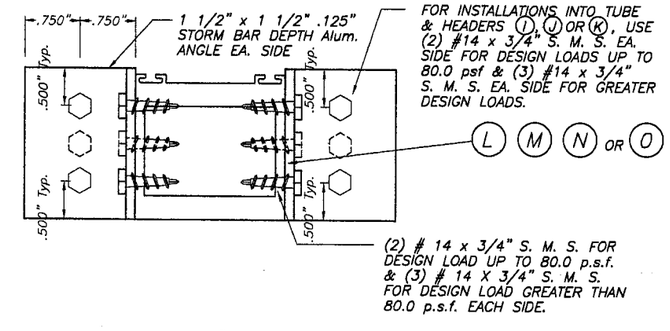

SECTION S3 – S3

SCALE : 1/2" = 1"

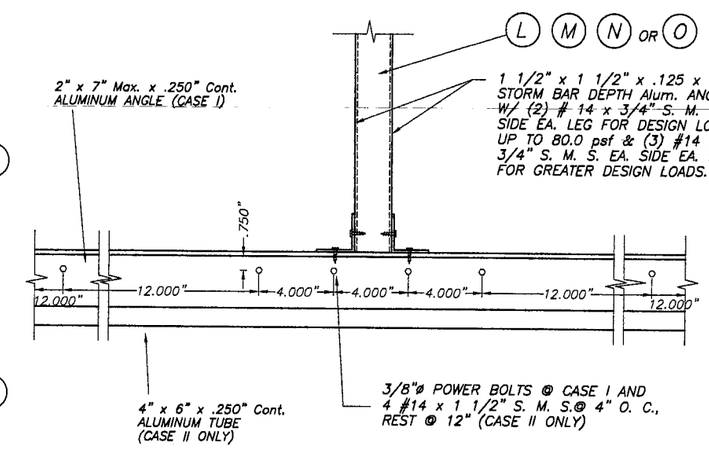

ELEVATION X

SCALE : 1/8" = 1"

PRODUCT REVISED
in complying with the Florida Building Code
Acceptance No 06-0227.05
Expiration Date 04/30/11
By
Miami-Dade Product Control Division

AUG 09 2005

F.B.C. (HIGH VELOCITY HURRICANE ZONE)

TILTECO INC.
TILLIT TESTING & ENGINEERING COMPANY
6355 N.W. 36th. St., Ste. 305, VIRGINIA GARDENS, Fl. 33166
Phone : (305)871-1530 . Fax : (305)871-1531
EB-0006719
WALTER A. TILLIT Jr., P. E.
FLORIDA Lic. # 44167

63 mm EXTRUDED ROLL-UP SHUTTER

HOMESHIELD STORMGUARD, LLC.
3585 E. 10th. COURT
HIALEAH, FLORIDA 33013
Phone : (305)691-2888 . Fax : (305)691-2244

REV. No	DESCRIPTION	DATE	REV. No	DESCRIPTION	DATE
1	OLD 02-530	7/01/05	–		
2	–	–	–		

DRAWN BY M.C.V.
7/01/05 DATE
05-181 DRAWING No
SHEET 6 OF 14

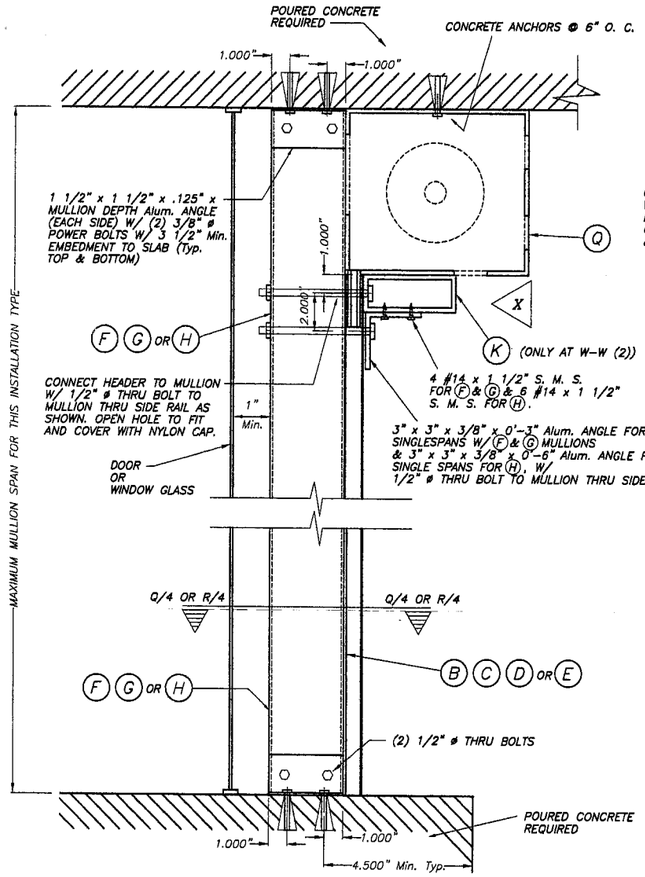

CASE I

FLOOR/CEILING MOUNTING : SECTION W-W (1) & W-W (2)

SCALE : 1/8" = 1"

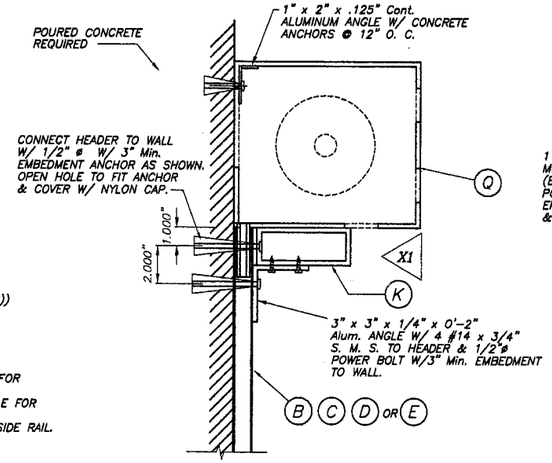

WALL MOUNTING : SECTION W-W (3)

SCALE : 1/8" = 1"

NOTE :
THIS INSTALLATION IS ONLY VALID FOR STORM BARS WITH Max. SPAN = 8'-0", HEADERS WITH 12'-0" Max. SINGLE SPAN & 80 psf MAXIMUM DESIGN LOAD.

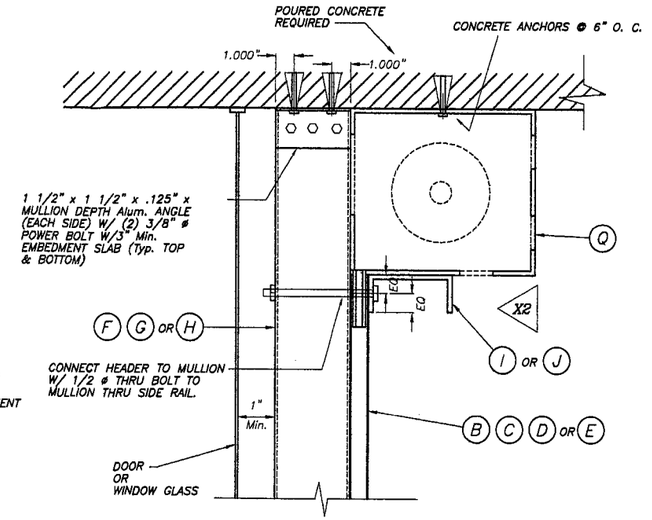

CEILING MOUNTING : SECTION W-W (2)

SCALE : 1/8" = 1"

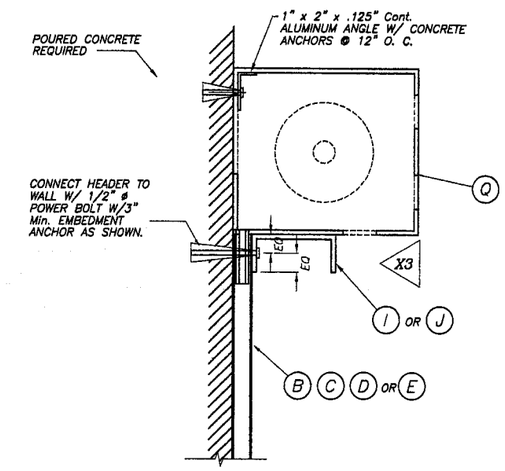

WALL MOUNTING : SECTION W-W (3)

SCALE : 1/8" = 1"

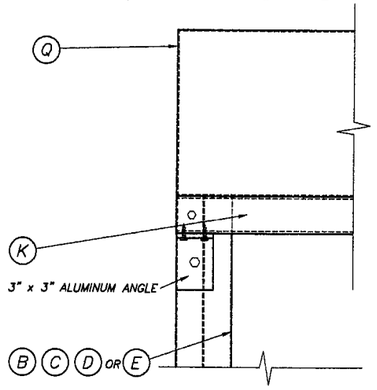

ELEVATION X1

SCALE : 1/8" = 1"

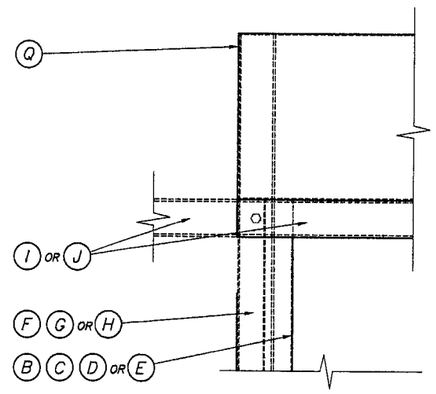

ELEVATION X2

SCALE : 1/8" = 1"

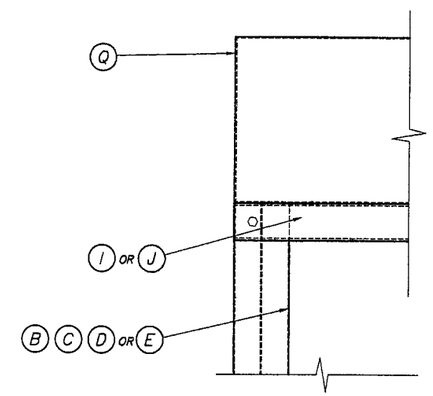

ELEVATION X3

SCALE : 1/8" = 1"

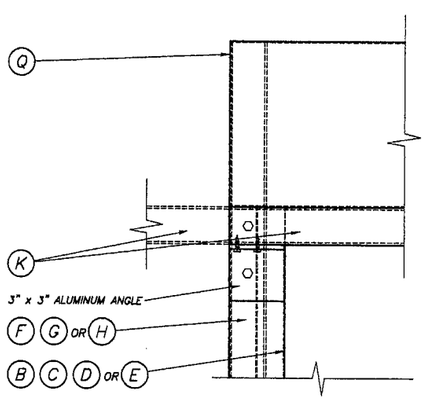

ELEVATION X

SCALE : 1/8" = 1"

TYPICAL HEADER CONNECTION AT ENDS: SECTIONS W-W

PRODUCT REVISED
as complying with the Florida Building Code
Acceptance No. 06-0227.05
Expiration Date 04/30/11
By
Miami-Dade Product Control Division

F.B.C. (HIGH VELOCITY HURRICANE ZONE)

AUG 09 2005

TILTECO INC.
TILLIT TESTING & ENGINEERING COMPANY
6355 N.W. 36th. St., Ste. 305, VIRGINIA GARDENS, FL 33166
Phone : (305)871-1530 . Fax : (305)871-1531
EB-0006719
WALTER A. TILLIT Jr., P. E.
FLORIDA Lic. # 44167

63 mm EXTRUDED ROLL-UP SHUTTER

HOMESHIELD STORMGUARD, LLC.
3585 E. 10th. COURT
HIALEAH, FLORIDA 33013
Phone : (305)691-2888 . Fax : (305)691-2244

REV. No	DESCRIPTION	DATE	REV. No	DESCRIPTION	DATE
1	OLD 02-530	7/01/05	-		
2	-	-	-		

DRAWN BY M.C.V.
7/01/05 DATE
05-181 DRAWING No
SHEET 7 OF 14

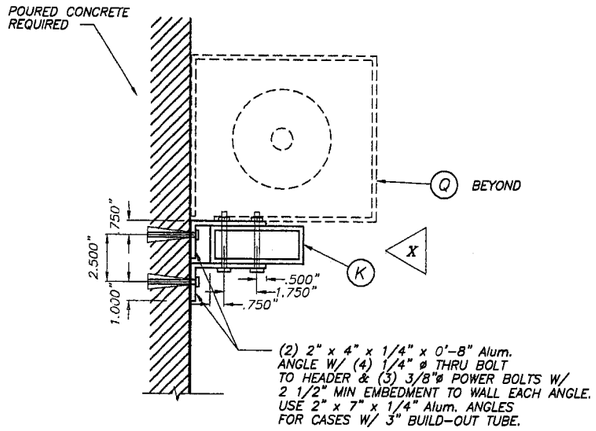

CASE I

WALL MOUNTING : SECTION W-W(3)

SCALE : 1/8" = 1"

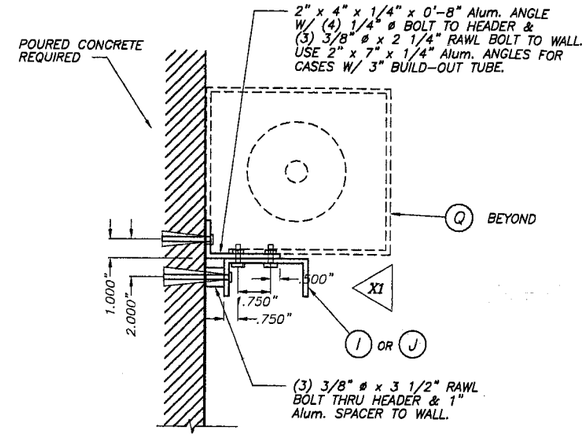

CASE II

WALL MOUNTING : SECTION W-W(3)

SCALE : 1/8" = 1"

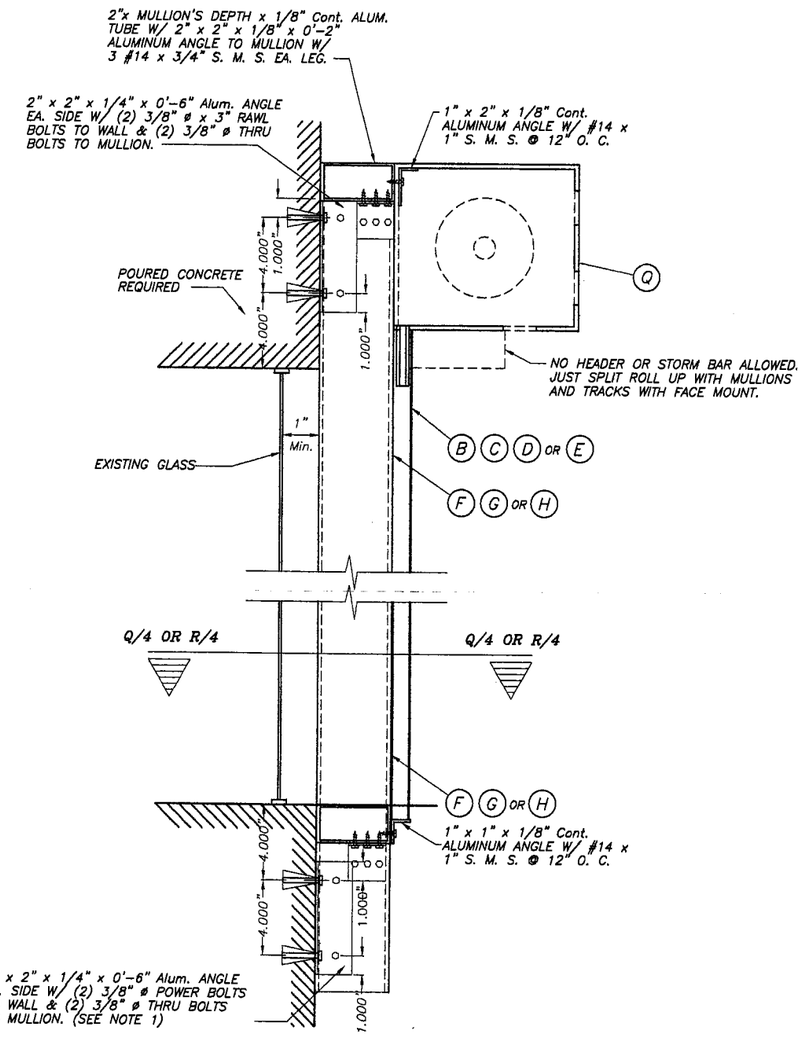

WALL MOUNTING : MULLION CONNECTION AT TOP & BOTTOM : SECTION W-W (1)

SCALE : 1/8" = 1"

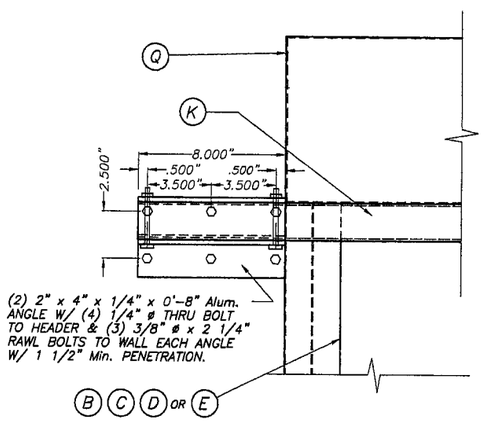

ELEVATION X

SCALE : 1/8" = 1"

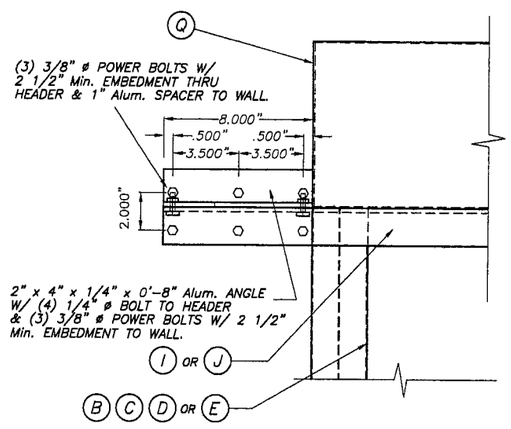

ELEVATION X1

SCALE : 1/8" = 1"

TYPICAL HEADER CONNECTION AT ENDS : SECTIONS W-W (CONTINUED)

NOTE 1 :
EXISTING WALL MAY BE POURED CONCRETE OR CONCRETE BLOCK FOR 10'-0" Max. MULLION SPAN AND 1 1/2" Min. ANCHOR EMBEDMENT W/ DESIGN LOADS UP TO 80.0 psf AND SHALL BE POURED CONCRETE OR CONCRETE FOR GREATER LOADS AND MULLION SPANS W/ 2 1/2" Min. ANCHOR EMBEDMENT.

PRODUCT REVISED
In complying with the Florida Building Code
Acceptance No 06-0222.05
Expiration Date 04/30/11
By Miami-Dade Product Control Division

F.B.C. (HIGH VELOCITY HURRICANE ZONE)

TILTECO INC.
TILLIT TESTING & ENGINEERING COMPANY
6355 N.W. 36th. St., Ste. 305, VIRGINIA GARDENS, Fl. 33166
Phone : (305)871-1530 . Fax : (305)871-1531
EB-0006719
WALTER A. TILLIT Jr., P. E.
FLORIDA Lic. # 44167

AUG 09 2005

63 mm EXTRUDED ROLL-UP SHUTTER

HOMESHIELD STORMGUARD, LLC.
3585 E. 10th. COURT
HIALEAH, FLORIDA 33013
Phone : (305)691-2888 . Fax : (305)691-2244

REV. No	DESCRIPTION	DATE	REV. No	DESCRIPTION	DATE
1	OLD 02-530	7/01/05	-		
2	-	-	-		

DRAWN BY M.C.V.

7/01/05 DATE

05-181 DRAWING No

SHEET 8 OF 14

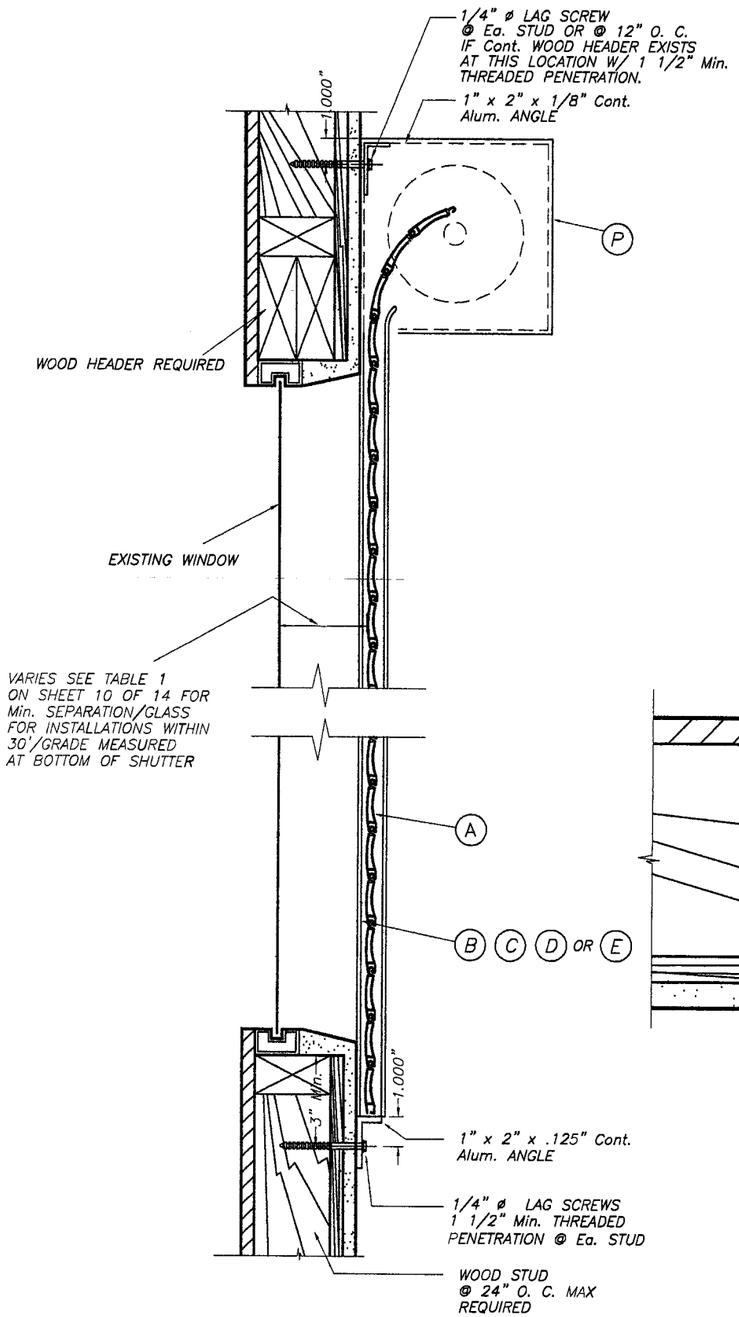

WALL MOUNTING INSTALLATION

SINGLE SPAN CONDITION

N. T. S.

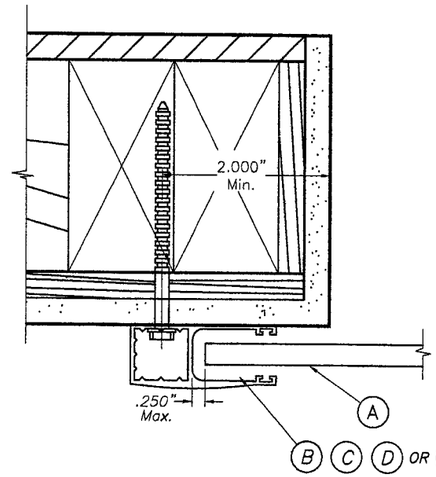

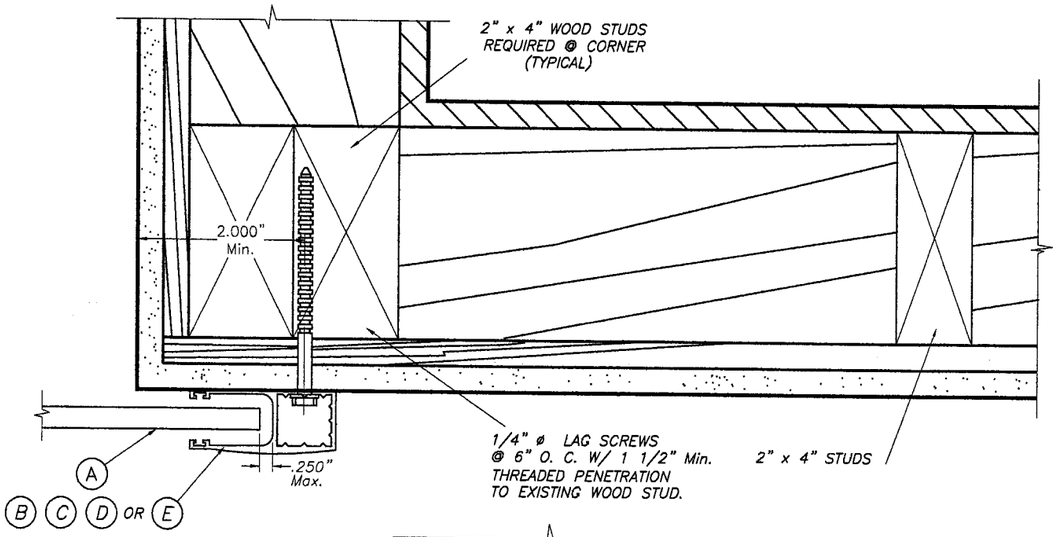

PLAN A (SECTION)

WALL MOUNT

SCALE : 3/8" = 1"

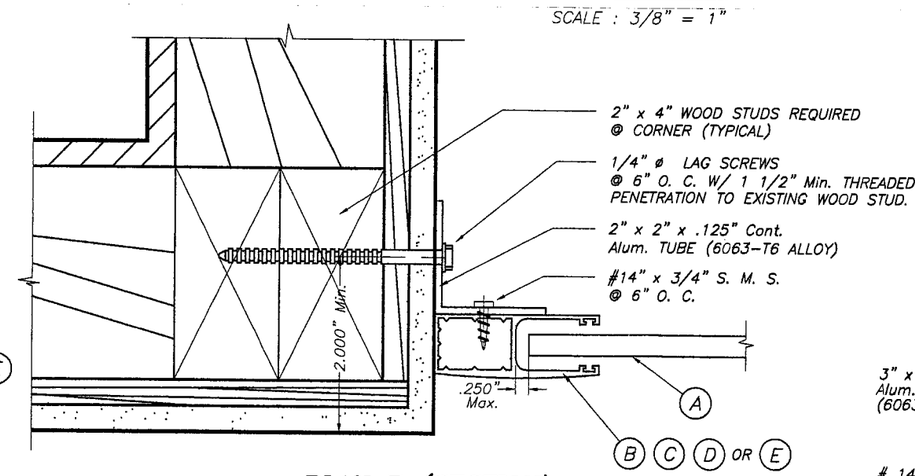

PLAN B (SECTION)

INSIDE MOUNT

SCALE : 3/8" = 1"

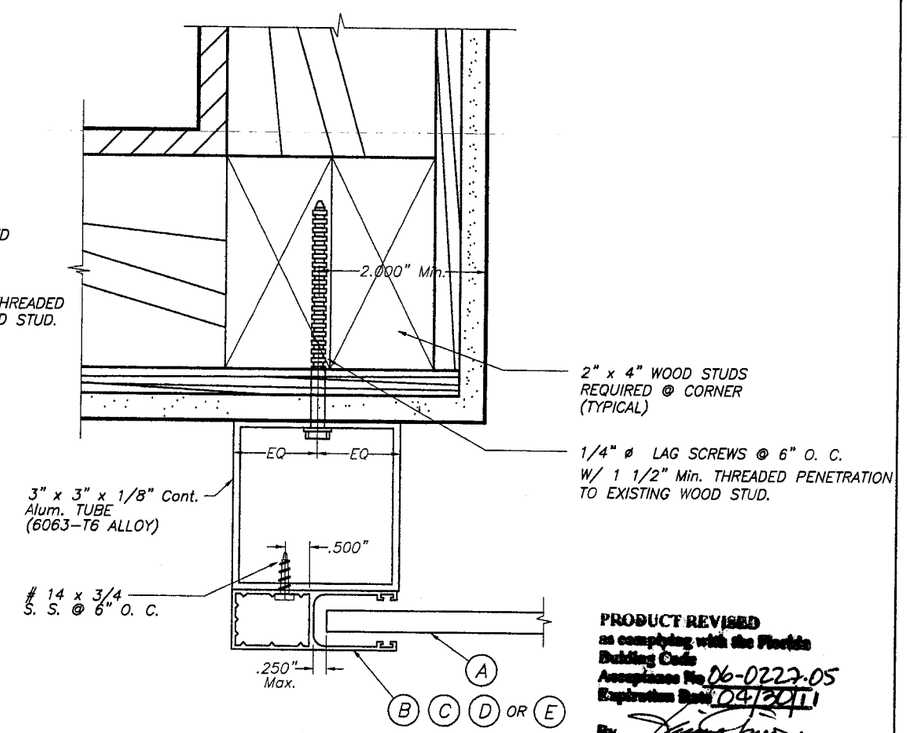

PLAN C (SECTION)

BUILD-OUT

SCALE : 3/8" = 1"F.B.C. (HIGH VELOCITY HURRICANE ZONE)

PRODUCT REVISED
as complying with the Florida
Building Code
Acceptance No. 06-0222.05
Expiration Date 04/2011
By
Miami-Dade Product Control
Division

NOTES:

1. INSTALLATIONS ARE ONLY VALID FOR BUILDINGS WITH DESIGN LOADS UP TO 80.0 psf.
2. FOR NEW FRAME CONSTRUCTION: WOOD MEMBER TO BE SOUTHERN PINE No. 2 W/ SPECIFIC DENSITY OF 0.55 OR EQUAL.
3. MINIMUM THREADED PENETRATION OF LAG SCREWS INTO WOOD MEMBER TO BE 1 1/2".

AUG 09 2005

TILTECO INC.
TILLIT TESTING & ENGINEERING COMPANY
6355 N.W. 36th. St., Ste. 305, VIRGINIA GARDENS, FL 33166
Phone : (305)871-1530 . Fax : (305)871-1531
EB-0006719
WALTER A. TILLIT Jr., P. E.
FLORIDA Lic. # 44167

63 mm EXTRUDED ROLL-UP SHUTTER

HOMESHIELD STORMGUARD, LLC.
3585 E. 10th. COURT
HIALEAH, FLORIDA 33013
Phone : (305)691-2888 . Fax : (305)691-2244

REV. No	DESCRIPTION	DATE	REV. No	DESCRIPTION	DATE
1	OLD 02-530	7/01/05	-		
2	-	-	-		

DRAWN BY M.C.V.

7/01/05 DATE

05-181 DRAWING No

SLAT PERFORMANCE CHART

MAXIMUM DESIGN PRESSURE RATING "W" (p. s. f.) AND CORRESPONDING MAXIMUM SLAT SPAN "L" FOR TYPE 1 SLAT (USE MAXIMUM VALUES BETWEEN POSITIVE AND NEGATIVE LOAD)

DESIGN LOAD "W" (p.s.f.)	SLAT TYPE 1					
	MAXIMUM SLAT SPAN *		MINIMUM SEPARATION TO GLASS			
	SINGLE UNIT *	MULTIPLE UNIT *	SINGLE UNIT **	MULTIPLE UNIT **	SINGLE UNIT ***	MULTIPLE UNIT ***
40.0	5'-6"	5'-6"	3"	3"	3"	3"
45.0	5'-6"	5'-6"	3"	3"	3"	3"
50.0	5'-4"	5'-4"	3"	3"	3"	3"
55.0	5'-2"	5'-2"	3"	3"	3"	3"
60.0	5'-0"	5'-0"	3"	3"	3"	3"
65.0	4'-10"	4'-10"	3"	3"	3"	3"
70.0.	4'-9"	4'-9"	3"	3"	3"	3"
75.0	4'-7"	4'-7"	2 7/8"	2 7/8"	2 5/8"	2 5/8"
80.0	4'-6"	4'-6"	2 7/8"	2 7/8"	2 5/8"	2 5/8"
85.0	4'-5"	4'-5"	2 7/8"	2 7/8"	2 5/8"	2 5/8"
90.0	4'-4"	4'-4"	2 7/8"	2 7/8"	2 5/8"	2 5/8"
95.0	4'-3"	4'-3"	2 7/8"	2 7/8"	2 5/8"	2 5/8"
100.0	4'-2"	4'-2"	2 7/8"	2 7/8"	2 5/8"	2 5/8"
105.0	4'-2"	4'-2"	2 7/8"	2 7/8"	2 5/8"	2 5/8"
110.0	4'-1"	4'-1"	2 7/8"	2 7/8"	2 5/8"	2 5/8"
115.0	4'-0"	4'-0"	2 7/8"	2 7/8"	2 5/8"	2 5/8"
120.0	3'-11"	3'-11"	2 7/8"	2 7/8"	2 1/2"	2 1/2"
125.0	3'-11"	3'-11"	2 7/8"	2 7/8"	2 1/2"	2 1/2"
130.0	3'-10"	3'-10"	2 7/8"	2 7/8"	2 1/2"	2 1/2"

DESIGN LOAD "W" (p.s.f.)	SLAT TYPE 1					
	MAXIMUM SLAT SPAN *		MINIMUM SEPARATION TO GLASS			
	SINGLE UNIT *	MULTIPLE UNIT *	SINGLE UNIT **	MULTIPLE UNIT **	SINGLE UNIT ***	MULTIPLE UNIT ***
135.0	3'-10"	3'-10"	2 7/8"	2 7/8"	2 1/2"	2 1/2"
140.0	3'-9"	3'-9"	2 7/8"	2 7/8"	2 1/2"	2 1/2"
145.0	3'-9"	3'-9"	2 7/8"	2 7/8"	2 1/2"	2 1/2"
150.0	3'-8"	3'-8"	2 7/8"	2 7/8"	2 3/8"	2 3/8"
155.0	3'-8"	3'-8"	2 7/8"	2 7/8"	2 3/8"	2 3/8"
160.0	3'-7"	3'-7"	2 7/8"	2 7/8"	2 3/8"	2 3/8"
165.0	3'-7"	3'-7"	2 7/8"	2 7/8"	2 3/8"	2 3/8"
170.0	3'-6"	3'-6"	2 7/8"	2 7/8"	2 3/8"	2 3/8"
175.0	3'-6"	3'-6"	2 7/8"	2 7/8"	2 3/8"	2 3/8"
180.0	3'-5"	3'-5"	2 7/8"	2 7/8"	2 3/8"	2 3/8"
185.0	3'-5"	3'-5"	2 7/8"	2 7/8"	2 3/8"	2 3/8"
190.0	3'-5"	3'-5"	2 7/8"	2 7/8"	2 3/8"	2 3/8"
195.0	3'-4"	3'-4"	2 7/8"	2 7/8"	2 3/8"	2 3/8"

* SPANS VALID FOR ALL APPLICABLE ELEVATIONS OF BUILDING.

** MINIMUM SEPARARTION TO GLASS FOR SHUTTERS INSTALLED WITHIN THE FIRST 30'-0" ELEVATION OF BUILDING MEASURED AT BOTTOM OF SHUTTER AND MAXIMUM SLAT SPAN. SEE TABLE 1 FOR MINIMUM SEPARATION TO GLASS FOR SPANS LESS THAN Max. ALLOWED.

*** MINIMUM SEPARATION TO GLASS FOR SHUTTERS INSTALLED ABOVE 30'-0" ELEVATION OF BUILDING, MEASURED AT BOTTOM OF SHUTTER.

NOTE: MINIMUM SEPARATION TO GLASS FOR SINGLE AND MULTIPLE UNITS SHALL BE MEASURED FROM BACK OF SLAT TO GLASS.

TABLE 1 :

SLAT SPAN (ft)		Min. SEPARATION TO GLASS	
SINGLE UNIT	MULTIPLE UNIT	SINGLE UNIT	MULTIPLE UNIT
4'-8" OR LESS	4'-8" OR LESS	2 7/8"	2 7/8"
>4'-8" TO 5'-6"	>4'-8" TO 5'-6"	3"	3"

SIDE RAIL CONDITION FOR TYPE 1 SLAT

NOTE :

TYPE 1 SLAT SHALL ONLY BE USED JOINTLY WITH TYPE 3 & 4 SIDE RAILS FOR A MAXIMUM SLAT SPAN OF 56" AND A MAXIMUM PRESSURE RAITING OF 80 p.s.f. WHICHEVER IS WORSE.
USE TYPE 1 & 2 SIDE RAILS FOR ANY SLAT SPAN OR PRESSURE RATING INDICATED ON SCHEDULES.

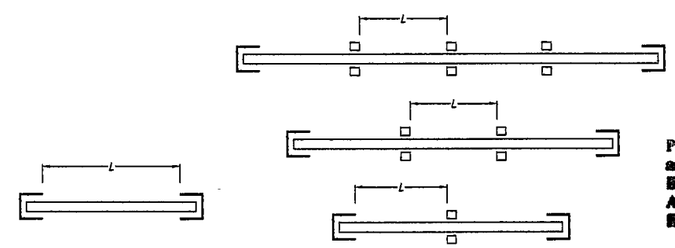

SINGLE SPAN

MULTIPLE SPAN

SPAN LAYOUT

PRODUCT REVISED
as complying with the Florida Building Code
Acceptance No 06-0222.05
Expiration Date 04/30/11
By
Miami Dade Product Control Division

F.B.C. (HIGH VELOCITY HURRICANE ZONE)

AUG 09 2005

TILTECO INC.
TILLIT TESTING & ENGINEERING COMPANY
6355 N.W. 36th. St., Ste. 305, VIRGINIA GARDENS, Fl. 33166
Phone : (305)871-1530 . Fax : (305)871-1531
EB-0006719
WALTER A. TILLIT Jr., P. E.
FLORIDA Lic. # 44167

63 mm EXTRUDED ROLL-UP SHUTTER

HOMESHIELD STORMGUARD, LLC.
3585 E. 10th. COURT
HIALEAH, FLORIDA 33013
Phone : (305)691-2888 . Fax : (305)691-2244

REV. No	DESCRIPTION	DATE	REV. No	DESCRIPTION	DATE
1	OLD 02-530	7/01/05	-		
2	-	-	-		

DRAWN BY M.C.V.

7/01/05 DATE

05-181 DRAWING No

SHEET 10 OF 14

MULLION LOADING CHART

MAXIMUM DESIGN PRESSURE RATING "W" (p. s. f.) AND CORRESPONDING MAXIMUM SPAN "L" (Ft.) FOR A GIVEN TYPE OF MULLION AND MULLION SPACING.

(USE MAXIMUM VALUES BETWEEN POSITIVE AND NEGATIVE LOAD)

MAXIMUM DESIGN LOAD "W" (p.s.f.)	TYPE 1 MULLION 2" x 4" x .125"		TYPE 2 MULLION 2" x 5" x .250"			TYPE 3 MULLION 4" x 6" x .188"		
	MULLION SPACING		MULLION SPACING			MULLION SPACING		
	3'-6" OR LESS	> 3'-6" TO 5'	3'-6" OR LESS	> 3'-6" TO 5'	> 5' TO 8'	3'-6" OR LESS	> 3'-6" TO 5'	> 5' TO 8'
40.0	8'-7"	8'-9"	12'-7"	12'-10"	11'-0"	15'-8"	16'-0"	13'-8"
45.0	8'-3"	8'-5"	12'-1"	12'-4"	10'-7"	15'-1"	15'-4"	13'-2"
50.0	7'-11"	8'-1"	11'-8"	11'-11"	10'-2"	14'-7"	14'-10"	12'-8"
55.0	7'-9"	7'-10"	11'-4"	11'-7"	9'-10"	14'-1"	14'-5"	12'-4"
60.0	7'-6"	7'-8"	11'-0"	11'-3"	9'-7"	13'-8"	14'-0"	11'-11"
65.0	7'-3"	7'-5"	10'-9"	10'-11"	9'-4"	13'-4"	13'-7"	11'-8"
70.0	7'-1"	7'-3"	10'-5"	10'-8"	9'-1"	13'-0"	13'-3"	11'-4"
75.0	6'-11"	7'-1"	10'-3"	10'-5"	8'-11"	12'-9"	13'-0"	11'-1"
80.0	6'-10"	6'-11"	9'-10"	10'-2"	8'-9"	12'-5"	12'-8"	10'-10"
85.0	6'-8"	6'-10"	9'-7"	10'-0"	8'-6"	12'-2"	12'-5"	10'-8"
90.0	6'-7"	6'-8"	9'-3"	9'-10"	8'-5"	12'-0"	12'-2"	10'-5"
95.0	6'-5"	6'-7"	9'-0"	9'-7"	8'-3"	11'-9"	12'-0"	10'-3"
100.0	6'-4"	6'-5"	8'-10"	9'-6"	8'-1"	11'-7"	11'-9"	10'-1"
105.0	6'-3"	6'-4"	8'-7"	9'-4"	7'-11"	11'-4"	11'-7"	9'-11"
110.0	6'-1"	6'-3"	8'-5"	9'-2"	7'-10"	11'-2"	11'-5"	9'-9"
115.0	6'-0"	6'-2"	8'-3"	9'-0"	7'-8"	11'-0"	11'-3"	9'-7"
120.0	5'-11"	6'-1"	8'-0"	8'-11"	7'-6"	10'-11"	11'-1"	9'-6"
125.0	5'-9"	5'-11"	7'-11"	8'-9"	7'-4"	10'-9"	10'-11"	9'-4"
130.0	5'-8"	5'-10"	7'-9"	8'-8"	7'-2"	10'-7"	10'-10"	9'-3"

MAXIMUM DESIGN LOAD "W" (p.s.f.)	TYPE 1 MULLION 2" x 4" x .125"		TYPE 2 MULLION 2" x 5" x .250"			TYPE 3 MULLION 4" x 6" x .188"		
	MULLION SPACING		MULLION SPACING			MULLION SPACING		
	3'-6" OR LESS	> 3'-6" TO 5'	3'-6" OR LESS	> 3'-6" TO 5'	> 5' TO 8'	3'-6" OR LESS	> 3'-6" TO 5'	> 5' TO 8'
135.0	5'-7"	5'-8"	7'-7"	8'-7"	7'-1"	10'-5"	10'-8"	9'-1"
140.0	5'-5"	5'-7"	7'-5"	8'-5"	6'-11"	10'-4"	10'-6"	9'-0"
145.0	5'-4"	5'-6"	7'-4"	8'-4"	6'-10"	10'-3"	10'-5"	8'-11"
150.0	5'-3"	5'-5"	7'-2"	8'-3"	6'-8"	10'-1"	10'-3"	8'-9"
155.0	5'-2"	5'-4"	7'-1"	8'-2"	6'-7"	10'-0"	10'-2"	8'-7"
160.0	5'-1"	5'-3"	7'-0"	8'-1"	6'-6"	9'-11"	10'-1"	8'-6"
165.0	5'-0"	5'-2"	6'-10"	8'-0"	6'-5"	9'-9"	10'-0"	8'-4"
170.0	4'-11"	5'-1"	6'-9"	7'-11"	6'-4"	9'-8"	9'-10"	8'-3"
175.0	4'-10"	5'-0"	6'-8"	7'-10"	6'-2"	9'-7"	9'-9"	8'-1"
180.0	4'-10"	4'-11"	6'-7"	7'-9"	6'-1"	9'-6"	9'-8"	8'-0"
185.0	4'-9"	4'-10"	6'-6"	7'-8"	6'-0"	9'-5"	9'-7"	7'-11"
190.0	4'-8"	4'-10"	6'-5"	7'-6"	5'-11"	9'-4"	9'-6"	7'-9"
195.0	4'-7"	4'-9"	6'-4"	7'-5"	5'-11"	9'-3"	9'-5"	7'-8"

PRODUCT REVISED
as complying with the Florida Building Code
Acceptance No 06-0227.05
Expiration Date 04/30/11
By
Miami-Dade Product Control Division

F.B.C. (HIGH VELOCITY HURRICANE ZONE)

AUG 09 2005

TILTECO INC.
TILLIT TESTING & ENGINEERING COMPANY
6355 N.W. 36th. St., Ste. 305, VIRGINIA GARDENS, Fl. 33166
Phone : (305)871-1530 . Fax : (305)871-1531
EB-0006719
WALTER A. TILLIT Jr., P. E.
FLORIDA Lic. # 44167

63 mm EXTRUDED ROLL-UP SHUTTER

HOMESHIELD STORMGUARD, LLC.
3585 E. 10th. COURT
HIALEAH, FLORIDA 33013
Phone : (305)691-2888 . Fax : (305)691-2244

REV. No	DESCRIPTION	DATE	REV. No	DESCRIPTION	DATE
1	OLD 02-530	7/01/05	-		
2	-	-	-		

DRAWN BY M.C.V.
7/01/05 DATE
05-181 DRAWING No
SHEET 11 OF 14

HEADER LOADING CHART

MAXIMUM DESIGN PRESSURE RATING "W" (p. s. f.) AND CORRESPONDING MAXIMUM SPAN "L" (Ft.) FOR A GIVEN TYPE OF HEADER AND STORM BAR HEIGHT (Ft.)

(USE MAXIMUM VALUES BETWEEN POSITIVE AND NEGATIVE LOAD)

MAXIMUM DESIGN LOAD "W" (p.s.f.)	TYPE 1 HEADER 1 1/2" x 4" CHANNEL		TYPE 2 HEADER 2" x 4 1/2" CHANNEL		TYPE 3 HEADER 2" x 5" TUBE		
	STORM BAR HEIGHT		STORM BAR HEIGHT		STORM BAR HEIGHT		
	5' OR LESS	> 5' TO 8'	5' OR LESS	> 5' TO 8'	5' OR LESS	> 5' TO 8'-0"	> 8' TO 10'
40.0	11'-9"	9'-3"	14'-8"	11'-7"	18'-0"	15'-4"	13'-9"
45.0	11'-1"	8'-9"	13'-10"	11'-0"	17'-6"	14'-6"	12'-11"
50.0	10'-6"	8'-4"	13'-2"	10'-5"	17'-0"	13'-9"	12'-3"
55.0	10'-0"	7'-11"	12'-6"	9'-11"	16'-7"	13'-1"	11'-9"
60.0	9'-7"	7'-7"	12'-0"	9'-6"	15'-10"	12'-7"	11'-3"
65.0	9'-3"	7'-3"	11'-6"	9'-1"	15'-3"	12'-1"	10'-9"
70.0	8'-11"	7'-0"	11'-1"	8'-9"	14'-8"	11'-7"	10'-5"
75.0	8'-7"	6'-9"	10'-9"	8'-6"	14'-2"	11'-3"	10'-0"
80.0	8'-4"	6'-7"	10'-5"	8'-3"	13'-9"	10'-10"	9'-9"
85.0	8'-1"	6'-4"	10'-1"	8'-0"	13'-4"	10'-6"	9'-5"
90.0	7'-10"	6'-2"	9'-10"	7'-9"	12'-11"	10'-3"	9'-2"
95.0	7'-7"	6'-0"	9'-6"	7'-7"	12'-7"	10'-0"	8'-11"
100.0	7'-5"	5'-11"	9'-4"	7'-4"	12'-3"	9'-9"	8'-8"
105.0	7'-3"	5'-9"	9'-1"	7'-2"	12'-0"	9'-6"	8'-6"
110.0	7'-1"	5'-7"	8'-10"	7'-0"	11'-9"	9'-3"	8'-3"
115.0	6'-11"	5'-6"	8'-8"	6'-10"	11'-6"	9'-1"	8'-1"
120.0	6'-9"	5'-4"	8'-6"	6'-9"	11'-3"	8'-10"	7'-11"
125.0	6'-8"	5'-3"	8'-4"	6'-7"	11'-0"	8'-8"	7'-9"
130.0	6'-6"	5'-2"	8'-2"	6'-5"	10'-9"	8'-6"	7'-7"

MAXIMUM DESIGN LOAD "W" (p.s.f.)	TYPE 1 HEADER 1 1/2" x 4" CHANNEL		TYPE 2 HEADER 2" x 4 1/2" CHANNEL		TYPE 3 HEADER 2" x 5" TUBE		
	STORM BAR HEIGHT		STORM BAR HEIGHT		STORM BAR HEIGHT		
	5' OR LESS	> 5' TO 8'	5' OR LESS	> 5' TO 8'	5' OR LESS	> 5' TO 8'-0"	> 8' TO 10'
135.0	6'-5"	5'-1"	8'-0"	6'-4"	10'-7"	8'-4"	7'-6"
140.0	6'-3"	5'-0"	7'-10"	6'-3"	10'-5"	8'-3"	7'-4"
145.0	6'-2"	4'-11"	7'-9"	6'-1"	10'-2"	8'-1"	7'-3"
150.0	6'-1"	4'-10"	7'-7"	6'-0"	10'-0"	7"-11"	7'-1"
155.0	6'-0"	4'-9"	7'-6"	5'-11"	9'-10"	7'-10"	7'-0"
160.0	5'-11"	4'-8"	7'-4"	5'-10"	9'-9"	7'-8"	6'-10"
165.0	5'-9"	4'-7"	7'-3"	5'-9"	9'-7"	7'-7"	6'-9"
170.0	5'-8"	4'-6"	7'-2"	5'-8"	9'-5"	7'-5"	6'-8"
175.0	5'-7"	4'-5"	7'-0"	5'-7"	9'-3"	7'-4"	6'-7"
180.0	5'-6"	4'-5"	6'-11"	5'-6"	9'-2"	7'-3"	6'-6"
185.0	5'-6"	4'-4"	6'-10"	5'-5"	9'-0"	7'-2"	6'-5"
190.0	5'-5"	4'-3"	6'-9"	5'-4"	8'-11"	7'-1"	6'-4"
195.0	5'-4"	4'-2"	6'-8"	5'-3"	8'-10"	7'-0"	6'-3"

PRODUCT REVISED
as complying with the Florida
Building Code
Acceptance No. 06-0227.05
Expiration Date 07/30/11
By
Miami-Dade Product Control
Division

F.B.C. (HIGH VELOCITY HURRICANE ZONE)

AUG 09 2005

TILTECO INC.
TILLIT TESTING & ENGINEERING COMPANY
6355 N.W. 36th. St., Ste. 305, VIRGINIA GARDENS, Fl. 33166
Phone : (305)871-1530 . Fax : (305)871-1531
EB-0006719
WALTER A. TILLIT Jr., P. E.
FLORIDA Lic. # 44167

63 mm EXTRUDED ROLL-UP SHUTTER

HOMESHIELD STORMGUARD, LLC.
3585 E. 10th. COURT
HIALEAH, FLORIDA 33013
Phone : (305)691-2888 . Fax : (305)691-2244

REV. No	DESCRIPTION	DATE	REV. No	DESCRIPTION	DATE
1	OLD 02-530	7/01/05	-		
2	-	-	-		

DRAWN BY M.C.V.

7/01/05 DATE

05-181 DRAWING No

STORM BAR LOADING CHART

MAXIMUM DESIGN PRESSURE RATING "W" (p. s. f.) AND CORRESPONDING MAXIMUM SPAN "L" FOR A GIVEN TYPE OF STORM BAR AND STORM BAR SPACING. (USE MAXIMUM VALUES BETWEEN POSITIVE AND NEGATIVE LOAD)

MAXIMUM DESIGN LOAD "W" (p.s.f.)	TYPE 1 STORM BAR .750" x 2.875" EXTRUDED			TYPE 2 STORM BAR 2" x 1.812" EXTRUDED			TYPE 3 STORM BAR 2" x 2 1/2" EXTRUDED			TYPE 4 STORM BAR 2" x 4" x .250" EXTRUDED		
	STORM BAR SPACING *			STORM BAR SPACING *			STORM BAR SPACING *			STORM BAR SPACING *		
	3' OR LESS	> 3' TO 4'	> 4' TO 5'	3' OR LESS	> 3' TO 4'	> 4' TO 5'	3' OR LESS	> 3' TO 4'	> 4' TO 5'	3' OR LESS	> 3' TO 4'	> 4' TO 5'
40.0	7'-3"	6'-5"	5'-8"	5'-9"	5'-9"	5'-9"	7'-8"	7'-8"	7'-6"	9'-7"	9'-7"	9'-7"
45.0	6'-11"	6'-0"	5'-5"	5'-9"	5'-9"	5'-9"	7'-8"	7'-8"	7'-1"	9'-7"	9'-7"	9'-7"
50.0	6'-7"	5'-8"	5'-1"	5'-9"	5'-9"	5'-9"	7'-8"	7'-6"	6'-8"	9'-7"	9'-7"	9'-7"
55.0	6'-3"	5'-5"	4'-10"	5'-9"	5'-9"	5'-6"	7'-8"	7'-2"	6'-5"	9'-7"	9'-7"	9'-7"
60.0	6'-0"	5'-2"	4'-8"	5'-9"	5'-9"	5'-3"	7'-8"	6'-10"	6'-1"	9'-7"	9'-7"	9'-3"
65.0	5'-9"	5'-0"	4'-6"	5'-9"	5'-8"	5'-0"	7'-7"	6'-7"	5'-11"	9'-7"	9'-7"	8'-11"
70.0	5'-7"	4'-10"	4'-4"	5'-9"	5'-5"	4'-10"	7'-4"	6'-4"	5'-8"	9'-7"	9'-7"	8'-7"
75.0	5'-5"	4'-8"	4'-2"	5'-9"	5'-3"	4'-8"	7'-1"	6'-1"	5'-6"	9'-7"	9'-3"	8'-3"
80.0	5'-2"	4'-6"	4'-0"	5'-9"	5'-1"	4'-6"	6'-10"	5'-11"	5'-4"	9'-7"	8'-11"	8'-0"
85.0	5'-1"	4'-4"	3'-11"	5'-8"	4'-11"	4'-5"	6'-8"	5'-9"	5'-2"	9'-7"	8'-8"	7'-9"
90.0	4'-11"	4'-3"	3'-10"	5'-6"	4'-9"	4'-3"	6'-5"	5'-7"	5'-0"	9'-7"	8'-5"	7'-7"
95.0	4'-9"	4'-2"	3'-8"	5'-4"	4'-8"	4'-2"	6'-3"	5'-5"	4'-10"	9'-6"	8'-3"	7'-4"
100.0	4'-8"	4'-0"	3'-7"	5'-3"	4'-6"	4'-1"	6'-1"	5'-4"	4'-9"	9'-3"	8'-0"	7'-2"
105.0	4'-7"	3'-11"	3'-6"	5'-1"	4'-5"	4'-0"	6'-0"	5'-2"	4'-7"	9'-0"	7'-10"	7'-0"
110.0	4'-5"	3'-10"	3'-5"	5'-0"	4'-4"	3-10"	5'-10"	5'-1"	4'-6"	8'-10"	7'-8"	6'-10"
115.0	4'-4"	3'-9"	3'-4"	4'-11"	4'-3"	3'-9"	5'-8"	4'-11"	4'-5"	8'-7"	7'-6"	6'-8"
120.0	4'-3"	3'-8"	3'-4"	4'-9"	4'-2"	3'-8"	5'-7"	4'-10"	4'-4"	8'-5"	7'-4"	6'-6"
125.0	4'-2"	3'-7"	3'-3"	4'-8"	4'-1"	3'-8"	5'-6"	4'-9"	4'-3"	8'-3"	7'-2"	6'-5"
130.0	4'-1"	3'-6"	3'-2"	4'-7"	4'-0"	3'-7"	5'-4"	4'-8"	4'-2"	8'-1"	7'-0"	6'-3"
135.0	4'-0"	3'-6"	3'-1"	4'-6"	3'-11"	3'-6"	5'-3"	4'-7"	4'-1"	7'-11"	6'-11"	6'-2"
140.0	3'-11"	3'-5"	3'-1"	4'-5"	3'-10"	3'-5"	5'-2"	4'-6"	4'-0"	7'-10"	6'-9"	6'-1"
145.0	3'-10"	3'-4"	3'-0"	4'-4"	3'-9"	3'-4"	5'-1"	4'-5"	3'-11"	7'-8"	6'-8"	5'-11"
150.0	3'-10"	3'-4"	2'-11"	4'-3"	3'-8"	3'-4"	5'-0"	4'-4"	3'-10"	7'-7"	6'-6"	5'-10"
155.0	3'-9"	3'-3"	2'-11"	4'-2"	3'-8"	3'-3"	4'-11"	4'-3"	3'-10"	7'-5"	6'-5"	5'-9"
160.0	3'-8"	3'-2"	2'-10"	4'-2"	3'-7"	3'-2"	4'-10"	4'-2"	3'-9"	7'-4"	6'-4"	5'-8"
165.0	3'-7"	3'-2"	2'-10"	4'-1"	3'-6"	3'-2"	4'-9"	4'-1"	3'-8"	7'-2"	6'-3"	5'-7"
170.0	3'-7"	3'-1"	2'-9"	4'-0"	3'-6"	3'-1"	4'-8"	4'-1"	3'-8"	7'-1"	6'-2"	5'-6"
175.0	3'-6"	3'-1"	2'-9"	4'-0"	3'-5"	3'-1"	4'-7"	4'-0"	3'-7"	7'-0"	6'-1"	5'-5"
180.0	3'-6"	3'-0"	2'-8"	3'-11"	3'-5"	3'-0"	4'-7"	3'-11"	3'-6"	6'-11"	6'-0"	5'-4"
185.0	3'-5"	3'-0"	2'-8"	3'-10"	3'-4"	3'-0"	4'-6"	3-11"	3'-6"	6'-10"	5'-11"	5'-3"
190.0	3'-5"	2'-11"	2'-7"	3'-10"	3'-3"	2'-11"	4'-5"	3'-10"	3'-5"	6'-8"	5'-10"	5'-2"
195.0	3'-4"	2'-11"	2'-7"	3'-9"	3'-3"	2'-11"	4'-5"	3'-10"	3'-5"	6'-7"	5'-9"	5'-2"

* STORM BAR SPACING SHALL BE SUCH THAT MAXIMUM SLAT SPAN SHALL NOT BE EXCEEDED.

PRODUCT REVISED
as complying with the Florida
Building Code
Acceptance No 06-0222.05
Expiration Date 09/30/11
By
Miami-Dade Product Control
Division

F.B.C. (HIGH VELOCITY HURRICANE ZONE)

AUG 09 2005

TILTECO INC.
TILLIT TESTING & ENGINEERING COMPANY
6355 N.W. 36th. St., Ste. 305, VIRGINIA GARDENS, Fl. 33166
Phone : (305)871-1530 . Fax : (305)871-1531
EB-0006719
WALTER A. TILLIT Jr., P. E.
FLORIDA Lic. # 44167

63 mm EXTRUDED ROLL-UP SHUTTER

HOMESHIELD STORMGUARD, LLC.
3585 E. 10th. COURT
HIALEAH, FLORIDA 33013
Phone : (305)691-2888 . Fax : (305)691-2244

REV. No	DESCRIPTION	DATE	REV. No	DESCRIPTION	DATE
1	OLD 02-530	7/01/05	-		
2	-	-	-		

DRAWN BY M.C.V.

7/01/05 DATE

05-181 DRAWING No

SHEET 13 OF 14

SIDE RAIL ANCHOR SCHEDULE

MAXIMUM DESIGN PRESSURE RATING "W" (p. s. f.) AND CORRESPONDING MAXIMUM ANCHOR SPACING (in) SCHEDULE FOR SIDE RAILS (B), (C), (D) & (E) CONNECTION TO C. B. S.

(USE MAXIMUM VALUES BETWEEN POSITIVE AND NEGATIVE LOADS)

MASONRY
POURED CONCRETE

SUBSTRATE LEGEND

MAXIMUM DESIGN LOAD "W" (p.s.f.)	(B)			(C)			(D) & (E)		
	WALL MOUNT	SIDE WALL MOUNT	BUILD-OUT	WALL MOUNT	SIDE WALL MOUNT	BUILD-OUT	WALL MOUNT	SIDE WALL MOUNT	BUILD-OUT
80.0 OR LESS	6"	6"	6"	6"	6"	6"	6"	6"	6"
	6"	6"	6"	6"	6"	6"	6"	6"	6"
>80.0 TO 150.0	5 1/2"	3 1/2"	6"	4"	6"	6"	–	–	–
	6"	6"	6"	6"	6"	6"	–	–	–
>150.0 TO 195.0	3 1/2"	3"	4 1/2"	2 1/2"	4 1/2"	4 1/2"	–	–	–
	6"	5 1/2"	6"	6"	6"	6"	–	–	–

MAXIMUM ANCHOR SPACING (in.) AT SIDE RAILS VERSUS EDGE DISTANCE = E. D.

MAXIMUM SIDE RAILS SPACINGS SHOWN ON THIS SHEET ARE VALID FOR 3 1/2" EDGE DISTANCE. FOR E. D. LESS THAN 3 1/2", REDUCE ANCHOR SPACING BY MULTIPLYING SPACINGS SHOWN ON THAT SHEET BY THE FOLLOWING FACTORS.

ACTUAL E. D.= EDGE DISTANCE	FACTOR
3"	.86
2 1/2"	.71
2"	.50

PRODUCT REVISED
as complying with the Florida
Building Code
Acceptance No 06-0222.05
Expiration Date 04/30/11
By
Miami-Dade Product Control
Division

F.B.C. (HIGH VELOCITY HURRICANE ZONE)

AUG 09 2005

TILLECO INC.
TILLIT TESTING & ENGINEERING COMPANY
6355 N.W. 36th. St., Ste. 305, VIRGINIA GARDENS, Fl. 33166
Phone : (305)871-1530 . Fax : (305)871-1531
EB-0006719
WALTER A. TILLIT Jr., P. E.
FLORIDA Lic. # 44167

63 mm EXTRUDED ROLL-UP SHUTTER

HOMESHIELD STORMGUARD, LLC.
3585 E. 10th. COURT
HIALEAH, FLORIDA 33013
Phone : (305)691-2888 . Fax : (305)691-2244

REV. No	DESCRIPTION	DATE	REV. No	DESCRIPTION	DATE
1	OLD 02-530	7/01/05	–		
2	–	–	–		

DRAWN BY M.C.V.
7/01/05 DATE
05-181 DRAWING No
SHEET 14 OF 14