MIAMI-DADE COUNTY

BUILDING CODE COMPLIANCE OFFICE (BCCO)
PRODUCT CONTROL DIVISION

MIAMI-DADE COUNTY, FLORIDA
METRO-DADE FLAGLER BUILDING
140 WEST FLAGLER STREET, SUITE 1603
MIAMI, FLORIDA 33130-1563
(305) 375-2901 FAX (305) 375-2908
www.buildingcodeonline.com

NOTICE OF ACCEPTANCE (NOA)

YKK AP America, Inc.
332 Firetower Road
Dublin, GA 31021

SCOPE:

This NOA is being issued under the applicable rules and regulations governing the use of construction materials. The documentation submitted has been reviewed by Miami-Dade County Product Control Division and accepted by the Board of Rules and Appeals (BORA) to be used in Miami Dade County and other areas where allowed by the Authority Having Jurisdiction (AHJ).

This NOA shall not be valid after the expiration date stated below. The Miami-Dade County Product Control Division (In Miami Dade County) and/or the AHJ (in areas other than Miami Dade County) reserve the right to have this product or material tested for quality assurance purposes. If this product or material fails to perform in the accepted manner, the manufacturer will incur the expense of such testing and the AHJ may immediately revoke, modify, or suspend the use of such product or material within their jurisdiction. BORA reserves the right to revoke this acceptance, if it is determined by Miami-Dade County Product Control Division that this product or material fails to meet the requirements of the applicable building code.

This product is approved as described herein, and has been designed to comply with the Florida Building Code, including the High Velocity Hurricane Zone.

DESCRIPTION: Series "YHC-300 O/G" Hurricane Curtain Wall Insulated Glazing – L.M.I.

APPROVAL DOCUMENT: Drawing No. **YHC-300-OG-IL**, titled "YHC-300 O/G Hurricane Curtain Wall Insulated Glazing Large Missile Impact Rated", sheets 1 through 30, prepared by manufacturer, dated 08/05/02 with revision "**B**" on 04/07/06, signed and sealed by Walter A. Tillit Jr., P.E., and bearing the Miami-Dade County Product Control Renewal stamp with the Notice of Acceptance number and expiration date by the Miami-Dade County Product Control Division.

MISSILE IMPACT RATING: Large and Small Missile Impact

LABELING: Each unit shall bear a permanent label with the manufacturer's name or logo, city, state and following statement: "Miami-Dade County Product Control Approved", unless otherwise noted herein.

RENEWAL of this NOA shall be considered after a renewal application has been filed and there has been no change in the applicable building code negatively affecting the performance of this product.

TERMINATION of this NOA will occur after the expiration date or if there has been a revision or change in the materials, use, and/or manufacture of the product or process. Misuse of this NOA as an endorsement of any product, for sales, advertising or any other purposes shall automatically terminate this NOA. Failure to comply with any section of this NOA shall be cause for termination and removal of NOA.

ADVERTISEMENT: The NOA number preceded by the words Miami-Dade County, Florida, and followed by the expiration date may be displayed in advertising literature. If any portion of the NOA is displayed, then it shall be done in its entirety.

INPECTION: A copy of this entire NOA shall be provided to the user by the manufacturer or its distributors and shall be available for inspection at the job site at the request of the Building Official.

This NOA **revises and renews NOA # 02-1118.01** and consists of this page 1 and evidence pages E-1and E-2, as well as approval document mentioned above.

The submitted documentation was reviewed by **Jaime D. Gascon, P.E.**

PRODUCT CONTROL ACCEPTED

J. Gascon
5/4/06

YKK AP America, Inc.

NOTICE OF ACCEPTANCE: EVIDENCE SUBMITTED

A. DRAWINGS

1. Manufacturer's die drawings and sections.
2. Drawing No. **YHC-300-OG-IL**, titled "YHC-300 O/G Hurricane Curtain Wall Insulated Glazing Large Missile Impact Rated", sheets 1 through 30, prepared by manufacturer, dated 8/5/02 with revision "**B**" on 04/07/06, signed, dated and sealed by Walter A. Tillit Jr., P.E.

B. TESTS

1. Test report on: 1) Air Infiltration Test, per FBC, TAS 202-94
   2) Uniform Static Air Pressure Test, Loading per FBC, TAS 202-94
   3) Water Resistance Test, per FBC, TAS 202-94
   4) Large Missile Impact Test per FBC, TAS 201-94
   5) Cyclic Wind Pressure Loading per FBC, TAS 203-94 along with marked drawings and installation diagram of unit of O-O, prepared by Hurricane Test Laboratory, Inc., Test Report No. **HTL- 0231-0401-01** dated 04/11/01, signed and sealed by Vinu J. Abraham, P.E.
   "Submitted under NOA# 02-1118.01"

C. CALCULATIONS

1. Revised Anchor Calculations and structural analysis, complying with FBC-2004, prepared by TILTECO Inc., dated 02/07/06, signed and sealed by Walter A. Tillit, P.E.
   Complies with ASTM- E1300-98

D. QUALITY ASSURANCE

1. Miami Dade Building Code Compliance Office (BCCO).

E. MATERIAL CERTIFICATIONS

1. Notice of Acceptance No. **01-1204.01** issued to **E.I. DuPont DeNemours** for "***Sentry Glass Plus***" dated 01/17/02, expiring on 01/14/07.
2. Notice of Acceptance No. **02-1205.03** issued to **Security Impact Glass Holdings L.L.C.** for "***SAFE - GLASS***" dated 01/02/03, expiring on 12/16/07.
3. Notice of Acceptance No. **01-1204.01** issued to **Solutia, Inc.** for "***Saflex HP***" dated 05/22/03, expiring on 04/14/08.

F. STATEMENTS

1. Statement letter of conformance and no financial interest, dated 03/01/06, signed and sealed by Walter A. Tillit, P.E.

Jaime D. Gascon, P.E.
Chief, Product Control Division
NOA No 06-0306.01
Expiration Date: March 04, 2011
Approval Date: May 18, 2006

NOTICE OF ACCEPTANCE: EVIDENCE SUBMITTED

G. OTHER

1. Letter from the consultant, dated 04/20/06 stating that the product is in compliance with the Florida Building Code (FBC).
2. Notice of Acceptance No. **02-1118.01,** issued to YKK AP America, Inc., for **Series "YHC-300 O/G" Hurricane Curtain Wall Insulated Glazing -L.M.I.**, dated 01/30/03 and expiring on 03/04/06.

Jaime D. Gascon, P.E.
Chief, Product Control Division
NOA No 06-0306.01
Expiration Date: March 04, 2011
Approval Date: May 18, 2006

YHC-300 O/G HURRICANE CURTAIN WALL INSULATED GLAZING
LARGE MISSILE IMPACT RATED
(SEE SEPARATE NOA FOR SMALL MISSILE AND/OR SINGLE GLAZING)

REV.	DESCRIPTION	BY	DATE
A	INDEX SHEET & GENERAL NOTES	C.V.	2/28/06
B	GENERAL NOTE 7, ASTM E 1300-98	L.G.	4/7/06

INDEX OF DRAWINGS

TYPES	CONTENTS	SHEET #
GENERAL	COVER SHT. & GENERAL NOTES	1
ELEVATIONS	ELEVATIONS KEYED TO SINGLE GLAZING DETAILS	2
GEN. DETAILS	TYPICAL SEALANT DETAILS	3
DETAILS FOR SINGLE GLAZING	MULLION DETAILS	4
	TYPICAL INTERMEDIATE HORIZONTAL DETAILS	5
	90° CORNER	6
	HEAD OPTIONS	7
	SILL OPTIONS	8
	STOREFRONT & DOOR	9,10
SECTION & ANCHOR DETAILS	INTERMEDIATE HORIZONTALS	11
	HEAD ANCHOR OPTIONS	12
	SILL ANCHOR OPTIONS	13
	SPLICE & ANCHOR CLIP	14,15,16
	MID-ANCHOR CLIP	17,18,19
	STOREFRONT & DOOR ANCHOR	20
MATERIAL LIST	BILL OF MATERIALS FOR SINGLE GLAZING	21
DESIGN LOAD VERIFICATION CHARTS.	MULLION CHART	22
	ANCHOR BOLT GUIDE -SINGLE SPAN-	23, 23A, 23B A
	ANCHOR BOLT GUIDE -TWIN SPAN-	24, 24A A
	GLASS CHARTS	25 - 30

GLASS TYPE	DESCRIPTION	NOMINAL THICKNESS	GLASS STR. QUALIFIED	NOTE
A1 A2 A3	5/16" SENTRYGLAS (1/4" GLASS + 0.052" SENTRYGLAS COMPOSITE)	5/16"	A1 = ANNEALED A2 = HEAT STR. A3 = TEMPERED	W/ THE USE OF ADAPTER E9-3141
E1 E2 E3	7/16" SAF-GLAS (3/16" GLASS + 0.070" POLYCARBONATE BY SECURITY IMPACT GLASS + 3/16" GLASS)	7/16"	E1 = ANNEALED E2 = HEAT STR. E3 = TEMPERED	
F1 F2 F3	9/16" SAF-GLAS (1/4" GLASS + 0.070" POLYCARBONATE BY SECURITY IMPACT GLASS + 1/4" GLASS)	9/16"	F1 = ANNEALED F2 = HEAT STR. F3 = TEMPERED	
G	9/16" SAFLEX HP (1/4" GLASS + 0.10" SAFLEX HP BY SOLUTIA + 1/4" GLASS) HEAT STRENTHENED GLASS ONLY).	9/16"	HEAT STR. ONLY	

GENERAL NOTES: A

1. MAXIMUM DESIGN PRESSURE RATING IS +90 PSF, -90 PSF. DESIGN WIND LOADS SHALL BE DETERMINED AS PER SECTION 1620 OF THE ABOVE MENTIONED CODE. IN ORDER TO VERIFY THAT ALUMINUM PROFILES AND ANCHORS ON THIS DRAWING AS TESTED WERE NOT OVERSTRESSED A 33% INCREASE IN ALLOWABLE STRESSES FOR WIND LOADS WAS NOT USED IN THEIR ANALYSIS.

2. SEE SHEET 22 TO DETERMINE MAX. DESIGN LOAD CAPACITY OF MULLION FOR VARIOUS CONFIGURATIONS AND REINFORCEMENT. THE RESULT SHALL BE USED AS THE SYSTEM MAXIMUM LOAD CAPACITY.

3. REFER TO ANCHOR SCHEDULE ON SHEET 2 FOR ANCHOR TYPE IDENTIFICATION. ALSO, SEE SHEETS 23, 23A, 23B & 24A TO VERIFY THE DESIGN LOAD CAPACITY OF VARIOUS ANCHOR BOLTS TO BE USED WITH THE END ANCHORS. RESULTS FROM THIS VERIFICATION SHALL NOT EXCEED THE CAPACITY OF THE SYSTEM AS PREVIOUSLY DETERMINED ON NOTE 2.

4. THIS SYSTEM COMPLIES WITH THE LARGE IMPACT TEST REQUIREMENT PER THE 2004 EDITION OF THE FLORIDA BUILDING CODE W/ THE 2005 SUPPLEMENT AND THEREFORE NO SHUTTERS ARE REQUIRED. THIS SYSTEM HAS BEEN TESTED PER PROTOCOLS TAS 201, 202, 203 IN ACCORDANCE WITH SECTION 1609.1.4 OF THE FLORIDA BUILDING CODE.

5. ALUMINUM ALLOY ON ALL STRUCTURAL MEMBERS SHALL BE 6063-T6 WITH A MINIMUM YIELD STRENGTH OF 25 KSI. ALL PRODUCTS WITH THE MARKING "YKK AP AMERICA" AND "MIAMI-DADE COUNTY PRODUCT CONTROL APPROVED" ARE IN COMPLIANCE WITH THIS SPECIFICATION FOR STRUCTURAL MEMBERS.

6. SEE THIS SHEET FOR A LISTING OF GLASS TYPES APPROVED TO BE USED WITH THIS PRODUCT.

B 7. SEE SHEETS 25 TO 30 TO DETERMINE DESIGN LOAD CAPACITY OF VARIOUS TYPES OF GLASS FOR DIFFERENT OPENING SIZES, BASED ON ASTM E 1300-98. HOWEVER, OTHER CONSIDERATIONS OF THE BUILDING CODE, REGARDING THE USE OF SAFETY GLASS, ETC. SHALL BE APPLIED AS NECESSARY. ALSO, GLASS MANUFACTURERS SHALL BE CONSULTED FOR THEIR RECOMMENDATIONS.

8. SHOP DRAWINGS PREPARED BASED ON THIS APPROVAL AND TAKING INTO ACCOUNT THE SPECIFIC JOB CONDITIONS, SHALL BE SUBMITTED TO THE BUILDING OFFICIAL AS PART OF THE PERMIT DOCUMENTS.

9. STRUCTURAL STEEL NOTED ON THESE DRAWINGS AS "STEEL BY OTHERS" MUST WITHSTAND THE LOADS IMPOSED BY THE CURTAIN WALL SYSTEM.

10. ALL ALUMINUM IN CONTACT W/ STEEL SHALL COMPLY W/ SECTION 2003.8.4 OF THE FLORIDA BUILDING CODE.

GLASS TYPES APPROVED TO BE USED WITH THIS PRODUCT

(SEE SHEETS 25 TO 30 TO DETERMINE DESIGN LOAD CAPACITY OF A PARTICULAR TYPE OF GLASS FOR DIFFERENT OPENING SIZES)

GLASS TYPE	DESCRIPTION	NOMINAL THICKNESS	GLASS STR. QUALIFIED
I1 I2 I3	1 1/16" INSULATED LAMINATED (1/4" GLASS + 1/2" AIR SPACE + 1/4" GLASS + 0.052" SENTRY GLASS COMPOSITE)	1 1/16"	I1=ANNEALED I2=HEAT STR. I3=TEMPERED
K1 K2 K3	1 3/16" INSULATED SAF-GLAS (1/4" GLASS + 1/2" AIR SPACE + 3/16" GLASS + 0.070 POLYCARBONATE BY SECURITY IMPACT GLASS + 3/16" GLASS)	1 3/16"	K1=ANNEALED K2=HEAT STR. K3=TEMPERED
L1 L2 L3	1 5/16" INSULATED SAF-GLAS (1/4" GLASS + 1/2" AIR SPACE + 1/4" GLASS + 0.070 POLYCARBONATE BY SECURITY IMPACT GLASS + 1/4" GLASS)	1 5/16"	L1=ANNEALED L2=HEAT STR. L3=TEMPERED
M	1 5/16" INSULATED SAFLEX HP (1/4" GLASS + 1/2" AIR SPACE + 1/4" GLASS + 0.100" SAFLEX HP BY SOLUTIA + 1/4" GLASS)	1 5/16"	HEAT STR. ONLY

WALTER A. TILLIT JR., P.E.
STRUCTURAL ENGINEER
FL. LIC.NO. 44167

APR 12 2006

TILLIT TESTING & ENGINEERING COMPANY INC.
6355 NW 36th STREET, STE. 305
MIAMI, FLORIDA 33166
FL E.B. LICENSE No. 0006719

PRODUCT REVISED
as complying with the Florida Building Code
Acceptance No. 06-0306.01
Expiration Date 03/04/11
By
Miami Dade Product Control Division

RESERVED FOR METRO-DADE USE ONLY

YKK AP America
YKK AP AMERICA, INC.
5630 GWALTNEY DRIVE
ATLANTA, GEORGIA 30336

SYSTEM	SCALE
YHC 300 INSULATED GLAZING SYS.	NONE
DESCRIPTION: TABLE OF CONTENTS & NOTES	
DRAWING NUMBER: YHC-300-OG-IL	REV. A

APPROVED BY	DRAWN BY	DATE	SHEET NO.
JIA	RTB	8/5/02	1 of 30

G:\SYSDWGS\YHC3000G\DADE\INSULATED\LARGEMISSILE\YHC300p01IL.DWG

REV.	DESCRIPTION	BY	DATE
A	TO MEET F.B.C. 2004, ADD ANCHOR	JIA	2/6/06
B	NOTE 1, DOORS/STOREFRONTS N.O.A.	L.G.	4/7/06

YHC 300 O/G SYSTEM – LARGE MISSILE

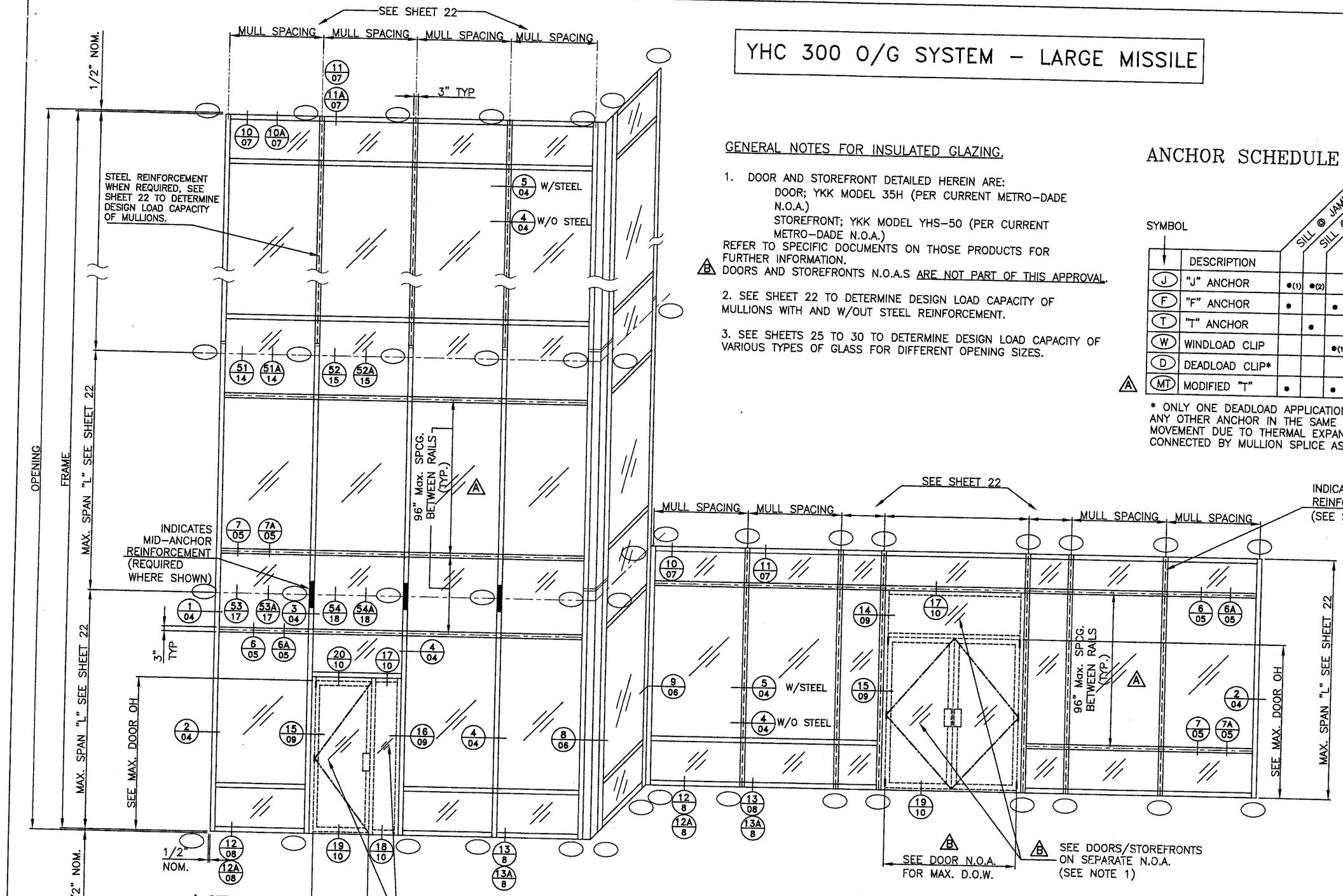

ELEVATION KEYED TO INSULATED GLAZING DETAILS

N.T.S.

GENERAL NOTES FOR INSULATED GLAZING.

1. DOOR AND STOREFRONT DETAILED HEREIN ARE:
   DOOR; YKK MODEL 35H (PER CURRENT METRO–DADE N.O.A.)
   STOREFRONT; YKK MODEL YHS–50 (PER CURRENT METRO–DADE N.O.A.)
   REFER TO SPECIFIC DOCUMENTS ON THOSE PRODUCTS FOR FURTHER INFORMATION.
   B DOORS AND STOREFRONTS N.O.A.S ARE NOT PART OF THIS APPROVAL.

2. SEE SHEET 22 TO DETERMINE DESIGN LOAD CAPACITY OF MULLIONS WITH AND W/OUT STEEL REINFORCEMENT.

3. SEE SHEETS 25 TO 30 TO DETERMINE DESIGN LOAD CAPACITY OF VARIOUS TYPES OF GLASS FOR DIFFERENT OPENING SIZES.

ANCHOR SCHEDULE

SYMBOL	DESCRIPTION	SILL @ JAMB	SILL @ MULLION	HEAD @ JAMB	HEAD @ MULLION	INTERM. FLOOR @ JAMB	INTERM. FLOOR @ MULLION	REF. DET'S
J	"J" ANCHOR	•(1)	•(2)					FF/13, GG/13
F	"F" ANCHOR	•		•				BB/12, HH/13
T	"T" ANCHOR		•		•			CC/12, JJ/13
W	WINDLOAD CLIP			•(1)	•(2)	•(1)	•(2)	DD+EE/12, 51/14 52/15, 53A/17
D	DEADLOAD CLIP*					•(1)	•(2)	51A/14, 52A/15 53/17, 54/18
A MT	MODIFIED "T"	•		•				TT/20, UU/20

* ONLY ONE DEADLOAD APPLICATION PER MULLION/JAMB SEGMENT, ANY OTHER ANCHOR IN THE SAME SEGMENT SHALL ALLOW FREE MOVEMENT DUE TO THERMAL EXPANSION. SEGMENTS SHALL BE CONNECTED BY MULLION SPLICE AS SHOWN ON SHEETS 14–16

TILTECO INC.
TILLIT TESTING & ENGINEERING COMPANY
6355 NW 36th STREET, STE. 305
MIAMI, FLORIDA 33166
FL E.B. LICENSE No. 0006719

PRODUCT REVISED
as complying with the Florida Building Code
Acceptance No. 06-0306.01
Expiration Date 03/04/11
By
Miami-Dade Product Control Division

RESERVED FOR METRO–DADE USE ONLY

YKK AP America
YKK AP AMERICA, INC.
5630 GWALTNEY DRIVE
ATLANTA, GEORGIA 30336

WALTER A. TILLIT JR., P.E.
STRUCTURAL ENGINEER
FL. LIC.NO. 44167

APR 12 2006

SYSTEM	SCALE
YHC 300 INSULATED GLAZING SYSTEM	AS SHOWN
DESCRIPTION: ELEVATION	
DRAWING NUMBER: YHC–300–OG–IL	REV. A
APPROVED BY: JIA / DRAWN BY: RTB / DATE: 8/5/02	SHEET NO. 2 OF 30

G:\SYSDWGS\YHC3000G\DADE\INSULATED\LARGEMISSILE\YHC300p02 IL.DWG

REV.	DESCRIPTION	BY	DATE
A	NO CHANGE THIS SHEET	JIA	2/6/06

TYPICAL SEALING DETAIL

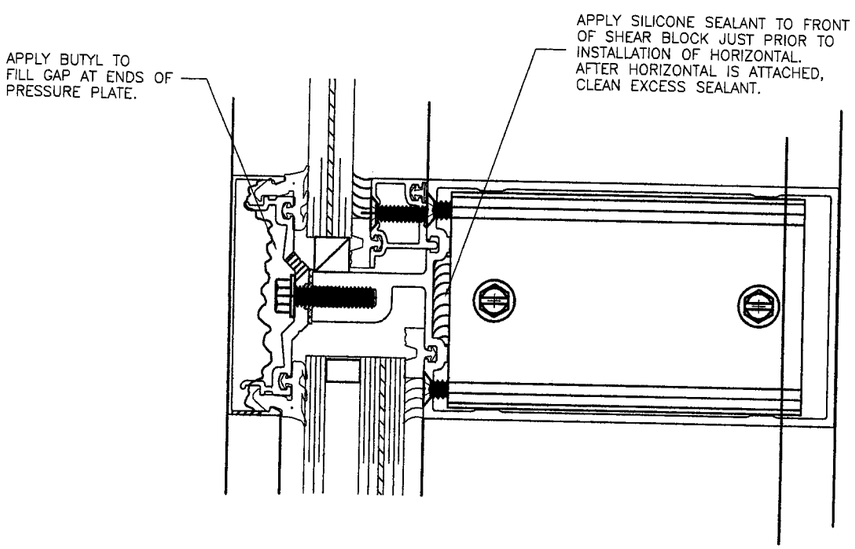

HORIZONTAL TO VERTICAL

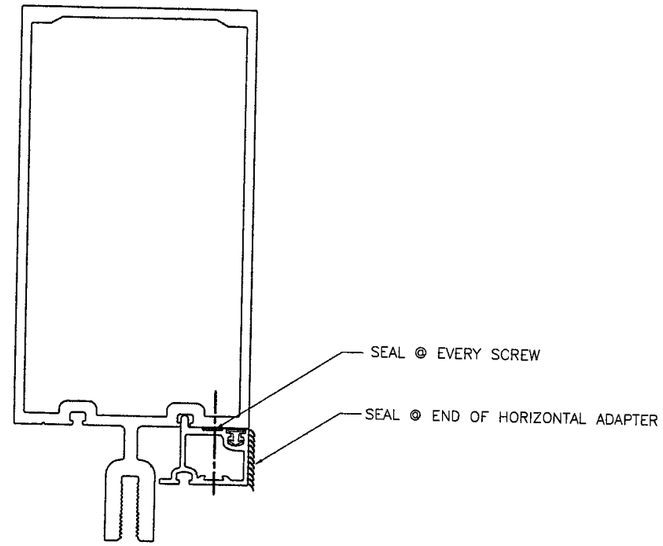

ADAPTER

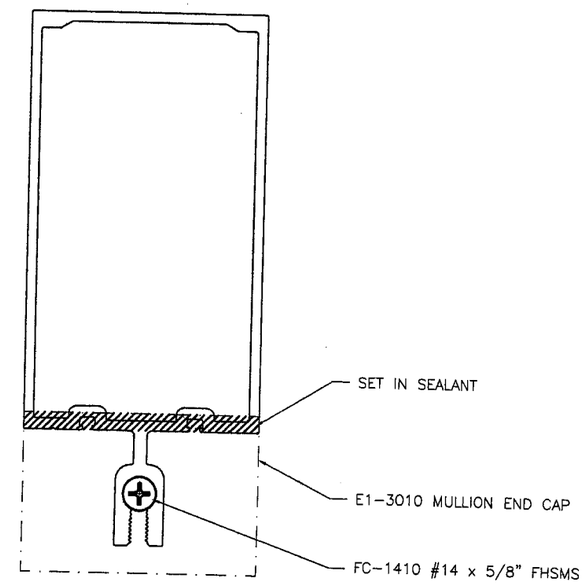

MULLION END CAP

(APPLY BEFORE MULLION ERECTION.)

PRODUCT REVISED
as complying with the Florida Building Code
Acceptance No. 06-0306.06
Expiration Date 03/09/11
By
Miami-Dade Product Control Division

RESERVED FOR METRO-DADE USE ONLY

WALTER A. TILLIT JR., P.E.
STRUCTURAL ENGINEER
FL. LIC.NO. 44167

APR 12 2006

TILLECO INC.
TILLIT TESTING & ENGINEERING COMPANY
6355 NW 36th STREET, STE. 305
MIAMI, FLORIDA 33166
FL E.B. LICENSE No. 0006719

YKK ap America
YKK AP AMERICA, INC.
5630 GWALTNEY DRIVE
ATLANTA, GEORGIA 30336

SYSTEM	SCALE
YHC 300 INSULATED GLAZING SYS.	1/2

DESCRIPTION: TYPICAL SEALING AND GLAZING DETAILS

DRAWING NUMBER	REV.
YHC-300-OG-IL	A

APPROVED BY	DRAWN BY	DATE	SHEET NO.
JIA	RTB	8/5/02	3 OF 30

G:\SYSDWGS\YHC3000G\DADE\INSULATED\LARGEMISSILE\YHC300p03 IL.DWG

REV.	DESCRIPTION	BY	DATE
A	SECTION 5	C.V.	2/6/06

1 SECTION

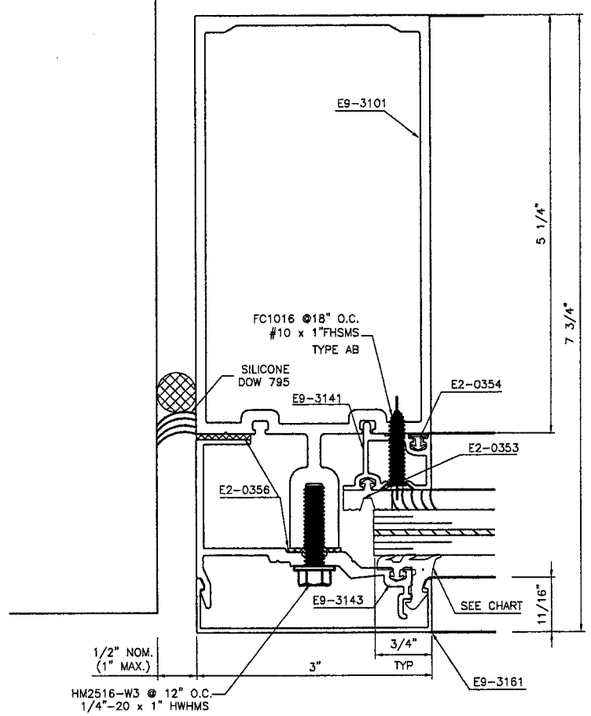

SECTION 3

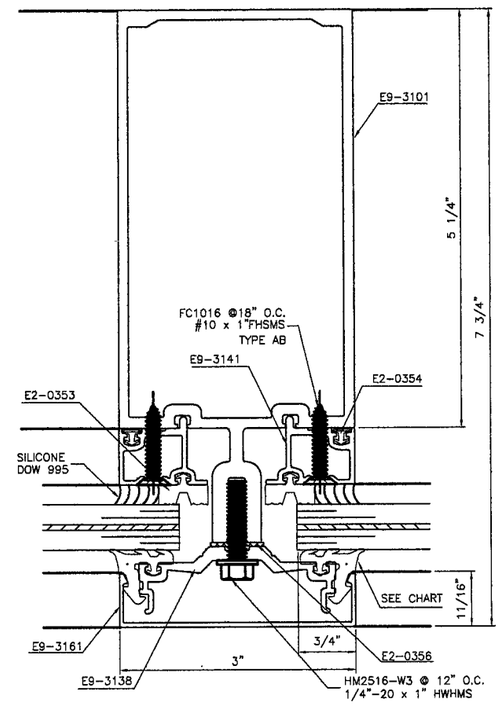

WALTER A. TILLIT JR., P.E.
STRUCTURAL ENGINEER
FL. LIC.NO. 44167

TILTECO INC.

TILLIT TESTING & ENGINEERING COMPANY
6355 NW 36th STREET, STE. 305
MIAMI, FLORIDA 33166
FL E.B. LICENSE No. 0006719

NOTE:
1. EXTERIOR GASKET CHART

GL. NOMINAL THICKNESS	USE GASKET
SINGLE GLASS (ADAPTER E9-3141)	
5/16"	E2-0360
7/16"	E2-0352
9/16"	E2-0351
INSULATED GLASS	
1 1/16"	E2-0360
1 3/16"	E2-0352
1 5/16"	E2-0351

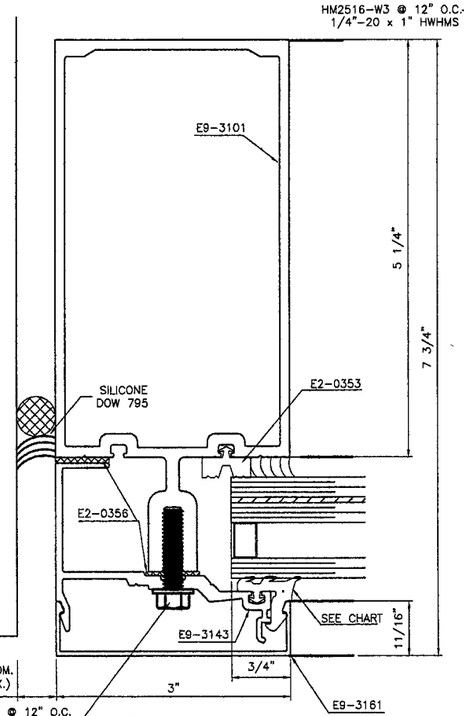

2 SECTION

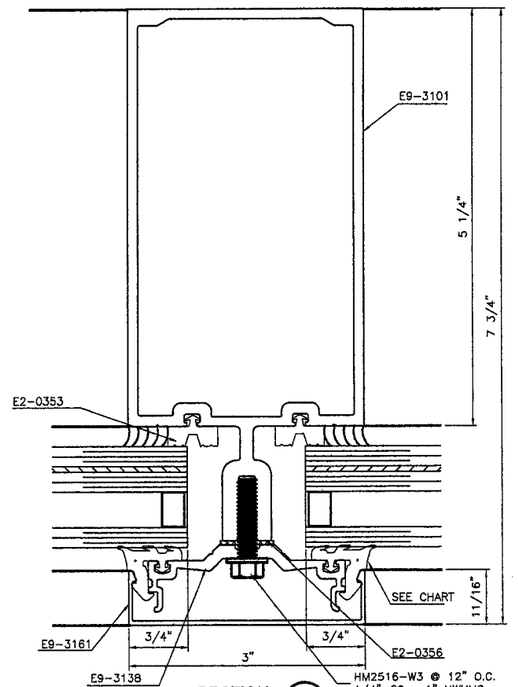

SECTION 4

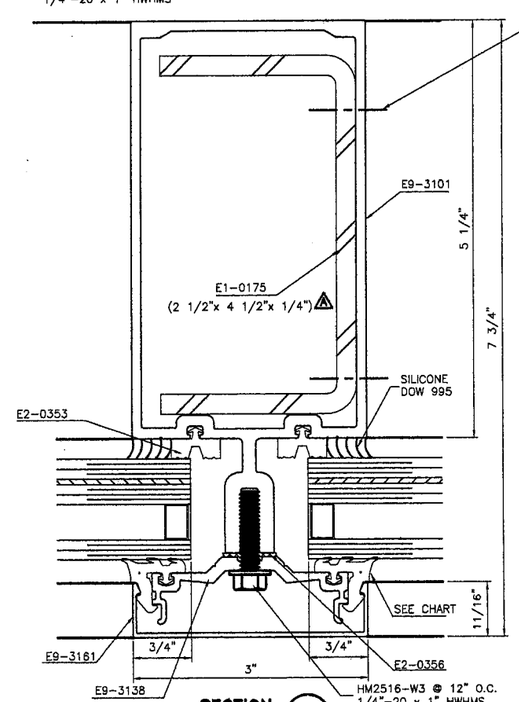

SECTION 5

PRODUCT REVISED
as complying with the Florida Building Code
Acceptance No 06-0306.01
Expiration Date 03/04/11
By
Miami Dade Product Control Division

APR 13 2006

RESERVED FOR METRO-DADE USE ONLY

YKK AP America

YKK AP AMERICA, INC.
5630 GWALTNEY DRIVE
ATLANTA, GEORGIA 30336

SYSTEM	SCALE
YHC 300 INSULATED GLAZING SYS.	1/2

DESCRIPTION: MULLION DETAILS

DRAWING NUMBER	REV.
YHC-300-OG-IL	A

APPROVED BY	DRAWN BY	DATE	SHEET NO.
JIA	RTB	8/5/02	4 OF 30

G:\SYSDWGS\YHC3000G\DADE\INSULATED\LARGEMISSILE\YHC300p04 IL.DWG

REV.	DESCRIPTION	BY	DATE
A	NO CHANGE THIS SHEET	JIA	2/6/06

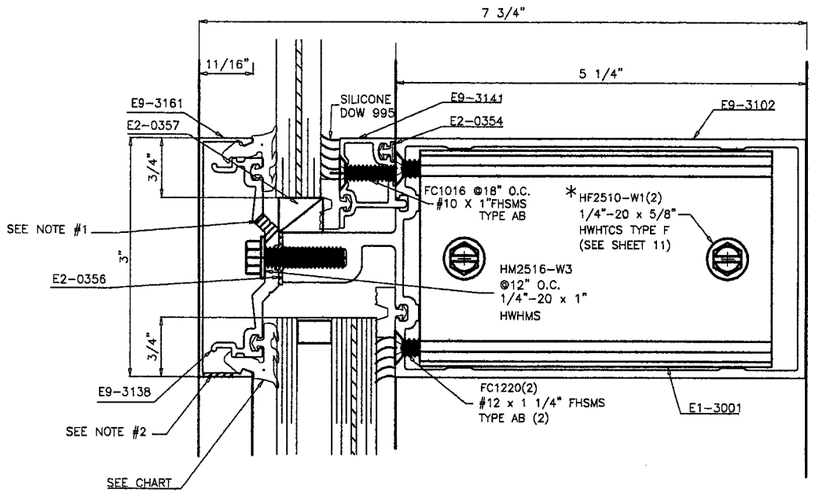

SECTION 6

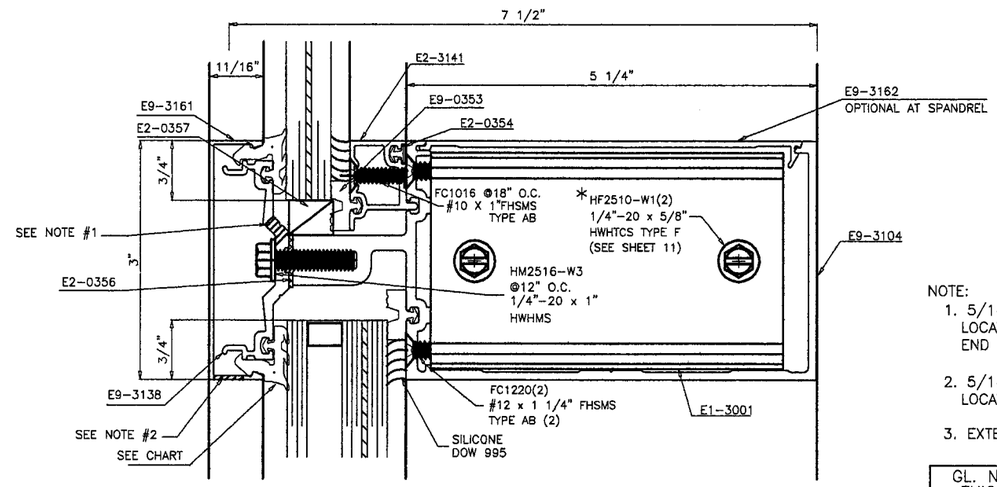

SECTION 6A

NOTE:

1. 5/16" DIA. WEEPHOLE. (3)/HORIZ. LOCATED (1) @ 3" FROM EACH END & (1) @ MID-SPAN.
2. 5/16" DIA. WEEPHOLE. (2)/HORIZ. LOCATED @ 1/3 D.L.O. FROM ENDS.
3. EXTERIOR GASKET CHART

GL. NOMINAL THICKNESS	USE GASKET
SINGLE GLASS (ADAPTER E9-3141)	
5/16"	E2-0360
7/16"	E2-0352
9/16"	E2-0351
INSULATED GLASS	
1 1/16"	E2-0360
1 3/16"	E2-0352
1 5/16"	E2-0351

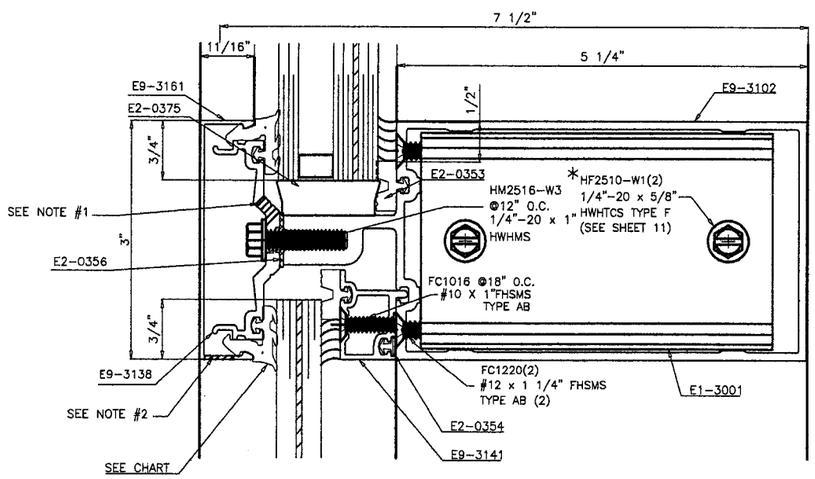

SECTION 7

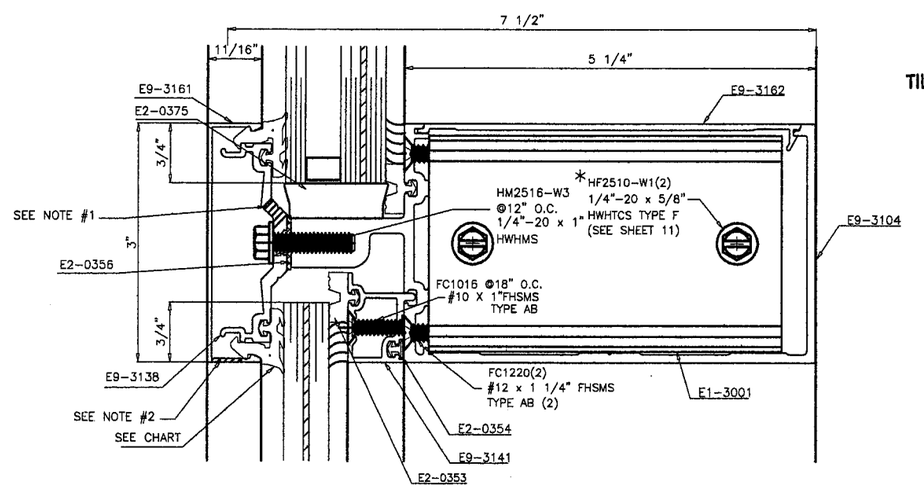

SECTION 7A

WALTER A. TILLIT JR., P.E.
STRUCTURAL ENGINEER
FL. LIC.NO. 44167

APR 12 2006

*REPLACE 5/8" LONG SCREW(HF2510) WITH 1" LONG SCREW(HF2516) FOR ATTACHMENT OF STEEL REINFORCEMENT WHEN STEEL REINFORCEMENT OCCURS. (SEE A-A ON SHT. 11)

TILTECO INC.

TILLIT TESTING & ENGINEERING COMPANY
6355 NW 36th STREET, STE. 305
MIAMI, FLORIDA 33166
FL E.B. LICENSE No. 0006719

PRODUCT REVISED
as complying with the Florida Building Code
Acceptance No. 06-0306.01
Expiration Date 03/04/11
By
Miami Dade Product Control Division

RESERVED FOR METRO-DADE USE ONLY

YKK ap America

YKK AP AMERICA, INC.
5630 GWALTNEY DRIVE
ATLANTA, GEORGIA 30336

SYSTEM	SCALE
YHC 300 INSULATED GLAZING SYS.	1/2

DESCRIPTION: INTERMEDIATE HORIZONTAL DETAILS

DRAWING NUMBER	REV.
YHC-300-OG-IL	A

APPROVED BY	DRAWN BY	DATE	SHEET NO.
JIA	RTB	8/5/02	5 OF 30

G:\SYSDWGS\YHC3000G\DADE\INSULATED\LARGEMISSILE\YHC300p05IL.DWG

REV.	DESCRIPTION	BY	DATE
A	NO CHANGE THIS SHEET	JIA	2/6/06

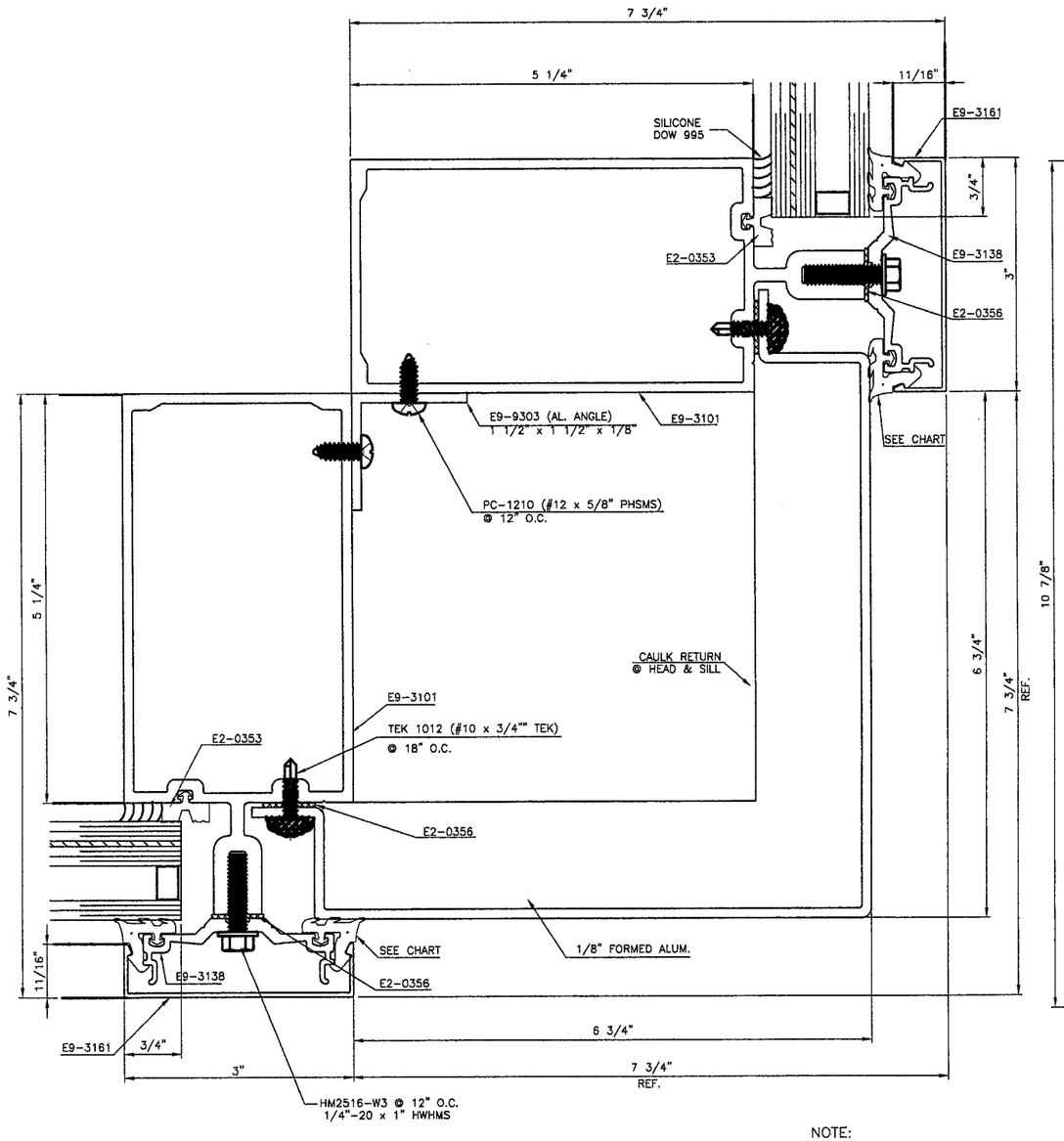

SECTION
OUTSIDE 90° CORNER (8)

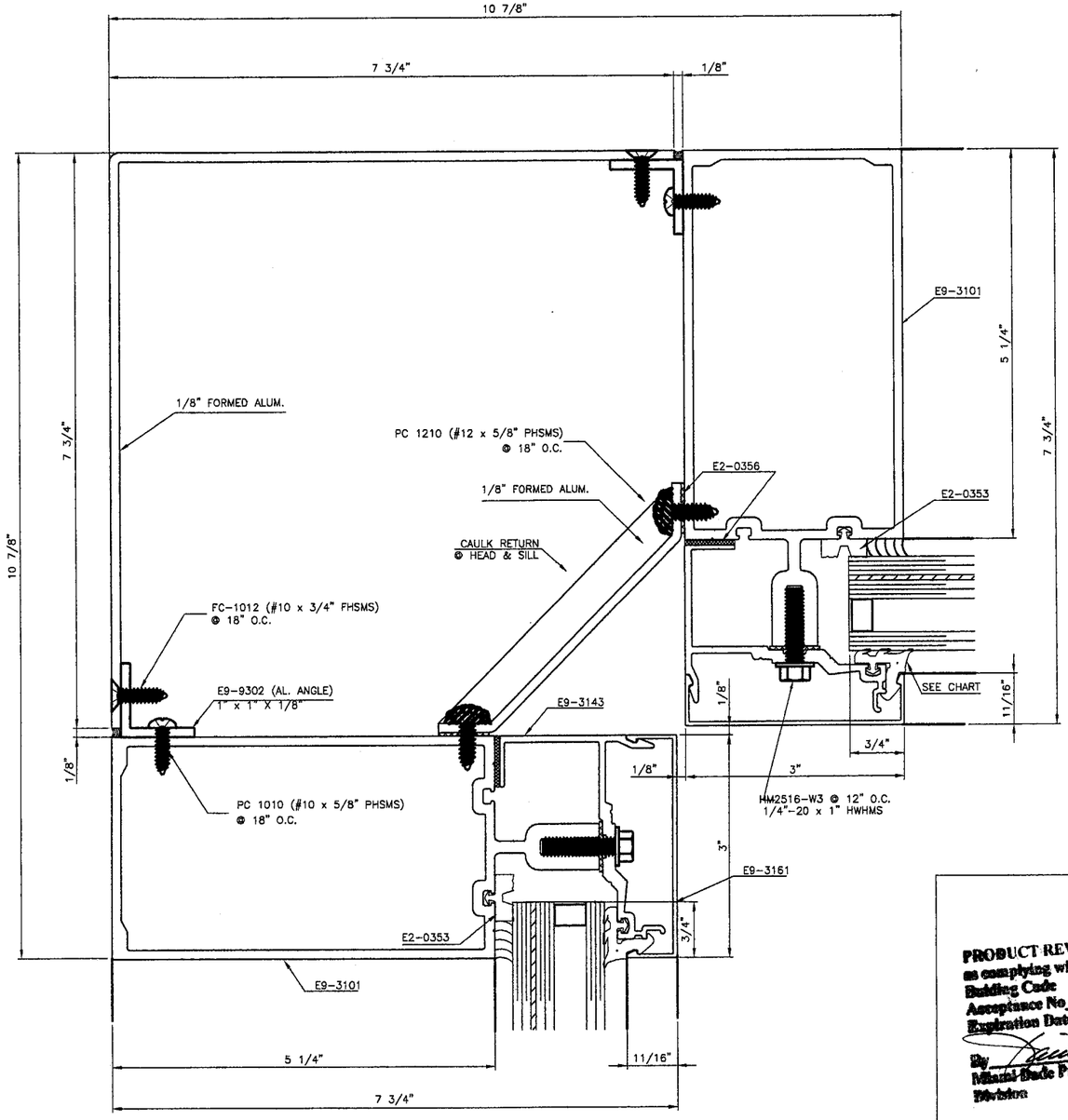

SECTION
INSIDE 90° CORNER (9)

NOTE:
1. EXTERIOR GASKET CHART

GL. NOMINAL THICKNESS	USE GASKET
SINGLE GLASS (ADAPTER E9-3141)	
5/16"	E2-0360
7/16"	E2-0352
9/16"	E2--0351
INSULATED GLASS	
1 1/16"	E2-0360
1 3/16"	E2-0352
1 5/16"	E2-0351

WALTER A. TILLIT JR., P.E.
STRUCTURAL ENGINEER
FL. LIC.NO. 44167

APR 12 2006

TILTECO INC.

TILLIT TESTING & ENGINEERING COMPANY
6355 NW 36th STREET, STE. 305
MIAMI, FLORIDA 33166
FL E.B. LICENSE No. 0006719

PRODUCT REVISED
as complying with the Florida Building Code
Acceptance No 06-030601
Expiration Date 03/04/11
By _____
Miami-Dade Product Control Division

RESERVED FOR METRO-DADE USE ONLY

YKK AP America

YKK AP AMERICA, INC.
5630 GWALTNEY DRIVE
ATLANTA, GEORGIA 30336

SYSTEM	SCALE
YHC 300 INSULATED GLAZING SYS.	1/2

DESCRIPTION: 90° CORNER DETAILS

DRAWING NUMBER	REV.
YHC-300-0G-IL	A

APPROVED BY	DRAWN BY	DATE	SHEET NO.
JIA	RTB	8/5/02	6 OF 30

G:\SYSDWGS\YHC3000G\DADE\INSULATED\LARGEMISSILE\YHC300p06IL.DWG

REV.	DESCRIPTION	BY	DATE
A	SECTIONS 10, 10A, 11	C.V.	2/28/06

SECTION 10
SHOWING "F" ANCHOR

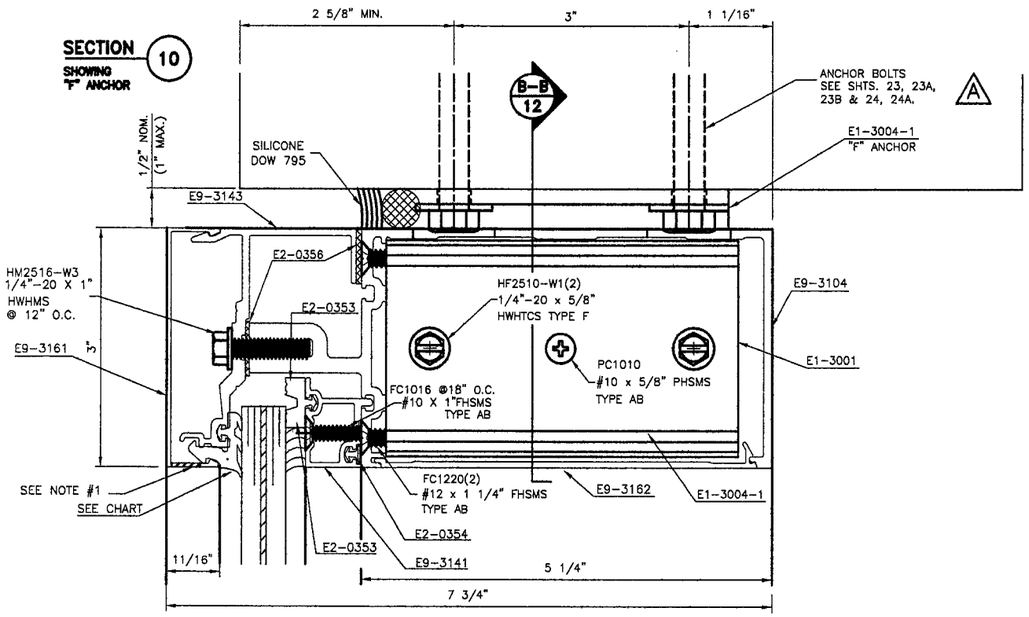

SECTION 11
SHOWING "T" ANCHOR

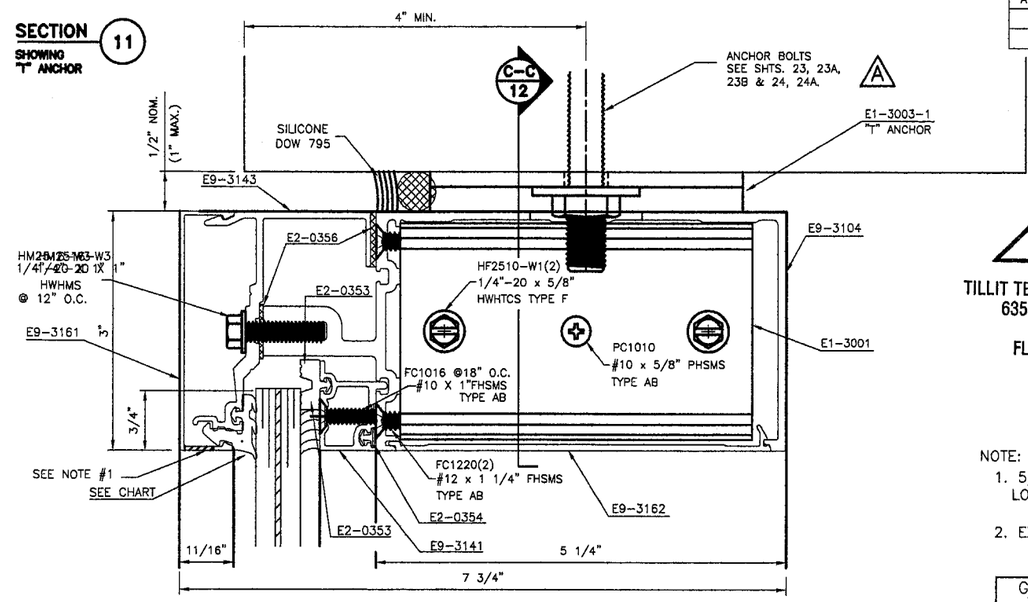

ALTERNATE SECTION 10A
SHOWING "F" ANCHOR

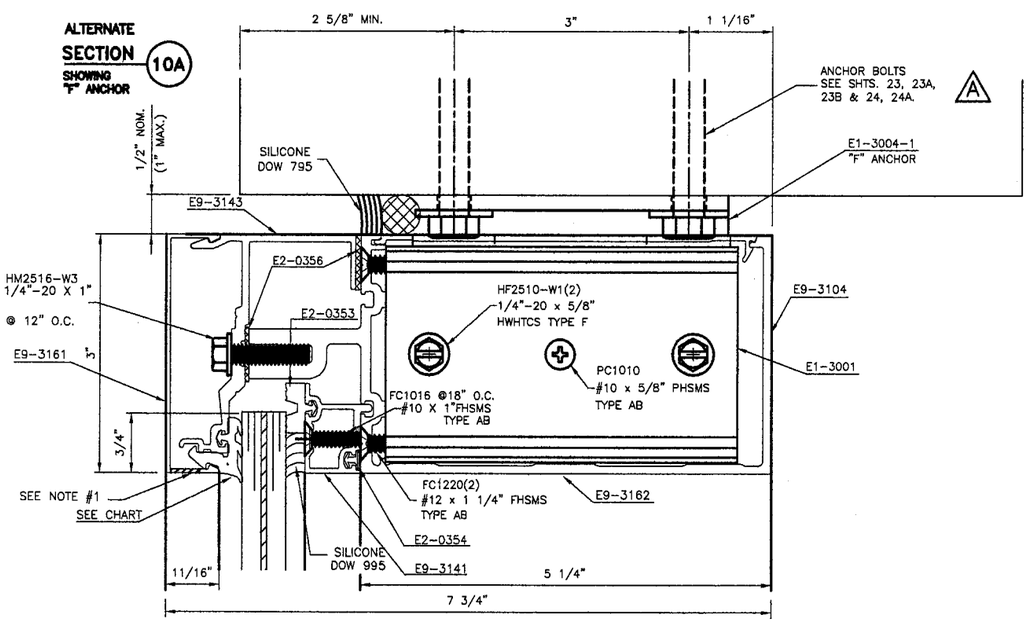

SECTION 11A
SHOWING ANCHOR CLIP

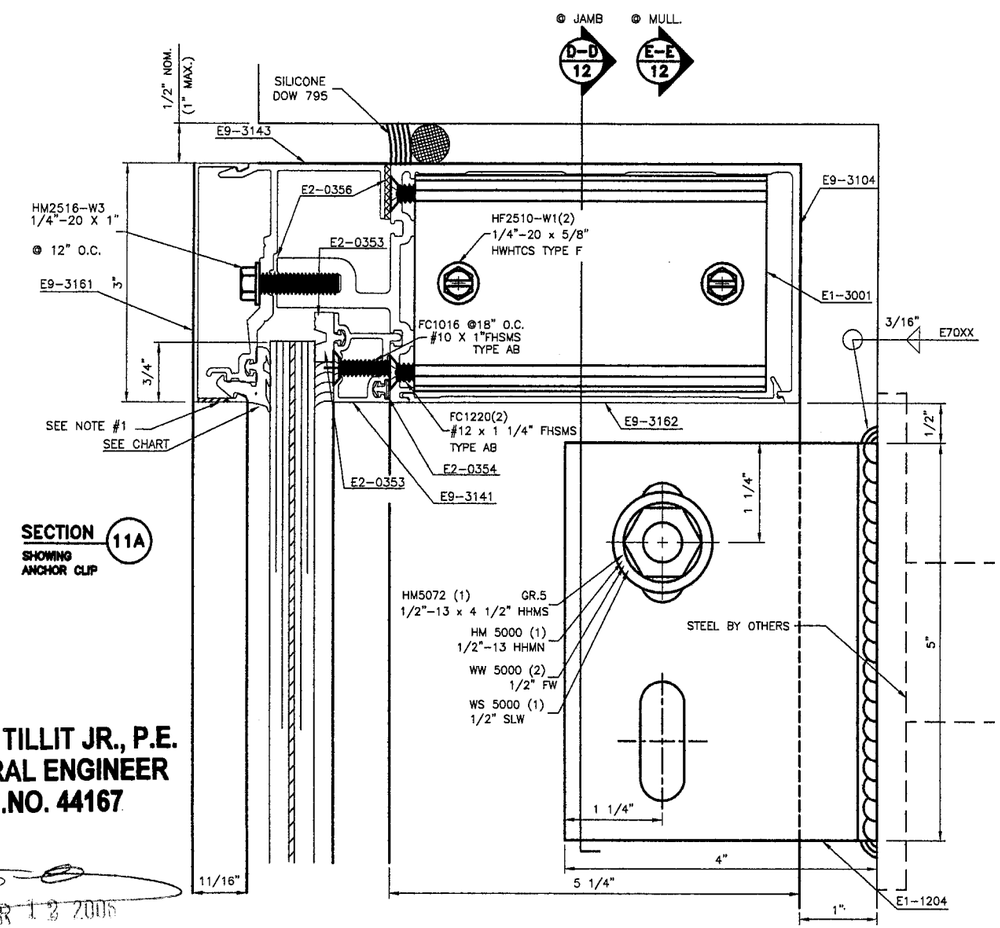

TILLECO INC.

TILLIT TESTING & ENGINEERING COMPANY
6355 NW 36th STREET, STE. 305
MIAMI, FLORIDA 33166
FL E.B. LICENSE No. 0006719

NOTE:
1. 5/16" DIA. WEEPHOLE. (2)/HORIZ. LOCATED @ 1/3 D.L.O. FROM ENDS.
2. EXTERIOR GASKET CHART

GL. NOMINAL THICKNESS	USE GASKET
SINGLE GLASS (ADAPTER E9-3141)	
5/16"	E2-0360
7/16"	E2-0352
9/16"	E2-0351
INSULATED GLASS	
1 1/16"	E2-0360
1 3/16"	E2-0352
1 5/16"	E2-0351

PRODUCT REVISED
to complying with the Florida Building Code
Acceptance No. 06-0306.01
Expiration Date 03/04/11
By Miami-Dade Product Control Division

RESERVED FOR METRO-DADE USE ONLY

YKK ap America
YKK AP AMERICA, INC.
5630 GWALTNEY DRIVE
ATLANTA, GEORGIA 30336

SYSTEM	SCALE
YHC 300 INSULATED GLAZING SYS.	1/2
DESCRIPTION: HEAD DETAILS	
DRAWING NUMBER: YHC-300-OG-IL	REV. A

APPROVED BY	DRAWN BY	DATE	SHEET NO.
JIA	RTB	8/5/02	7 OF 30

WALTER A. TILLIT JR., P.E.
STRUCTURAL ENGINEER
FL. LIC.NO. 44167

APR 12 2006

G:\SYSDWGS\YHC3000G\DADE\INSULATE\LARGEMISSILE\YHC300p07IL.DWG

REV.	DESCRIPTION	BY	DATE
A	12, 12A, 13, 13A	C.V.	2/28/06
B	EDGE DISTANCE REQ'D.	C.V.	4/24/06

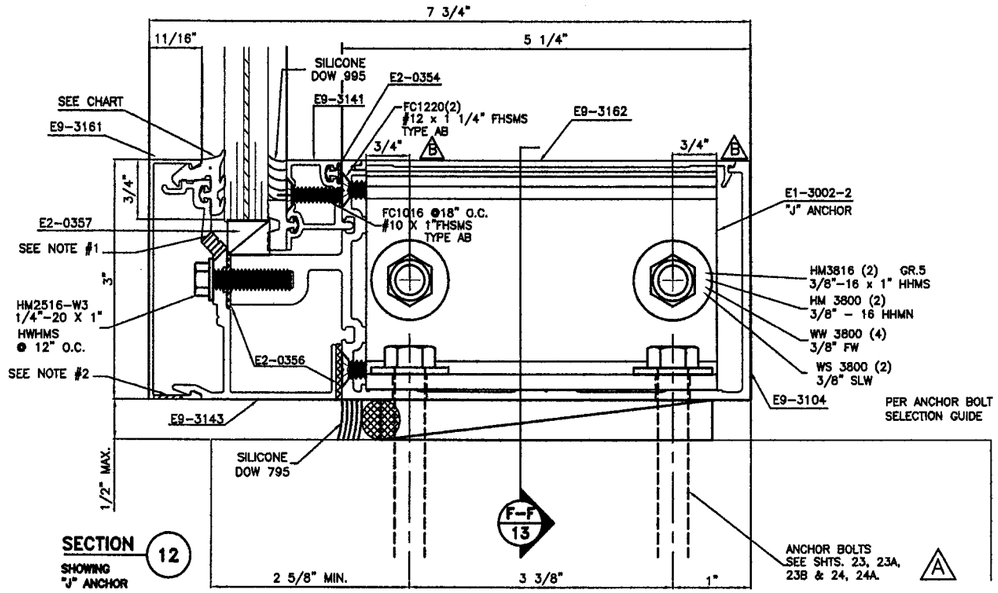

SECTION 12
SHOWING "J" ANCHOR

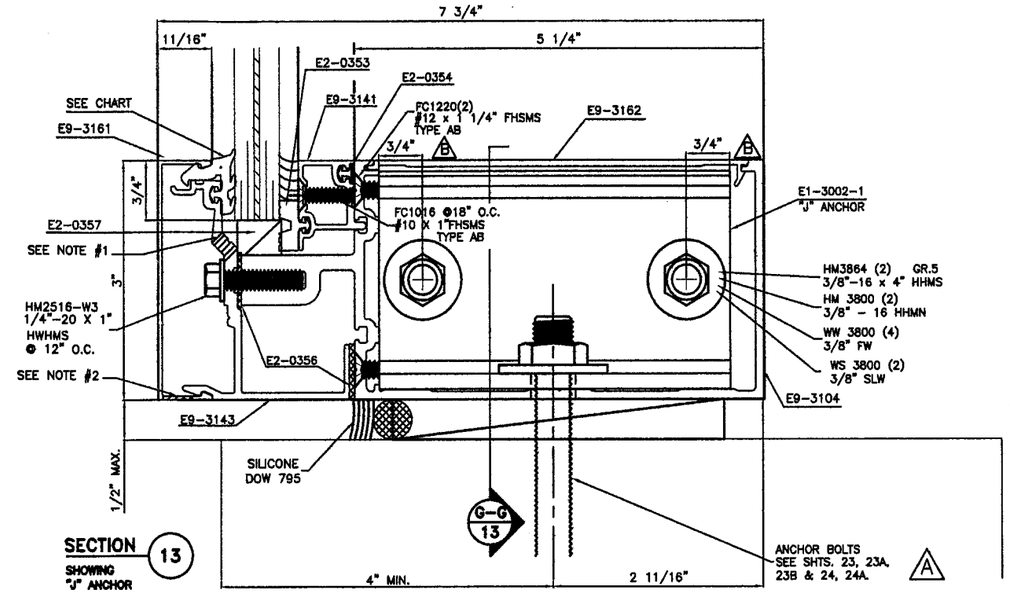

SECTION 13
SHOWING "J" ANCHOR

NOTE:

1. 5/16" DIA. WEEPHOLE. (3)/HORIZ. LOCATED (1) @ 3" FROM EACH END & (1) @ MID-SPAN.
2. 5/16" DIA. WEEPHOLE. (2)/HORIZ. LOCATED @ 1/3 D.L.O. FROM ENDS.
3. EXTERIOR GASKET CHART

GL. NOMINAL THICKNESS	USE GASKET
SINGLE GLASS (ADAPTER E9-3141)	
5/16"	E2-0360
7/16"	E2-0352
9/16"	E2-0351
INSULATED GLASS	
1 1/16"	E2-0360
1 3/16"	E2-0352
1 5/16"	E2-0351

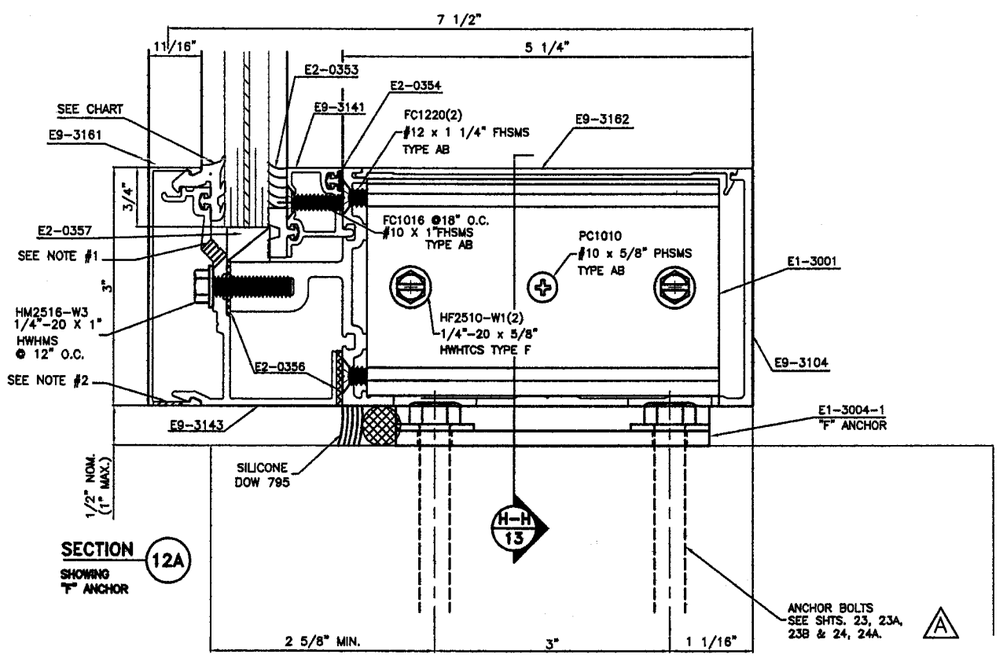

SECTION 12A
SHOWING "F" ANCHOR

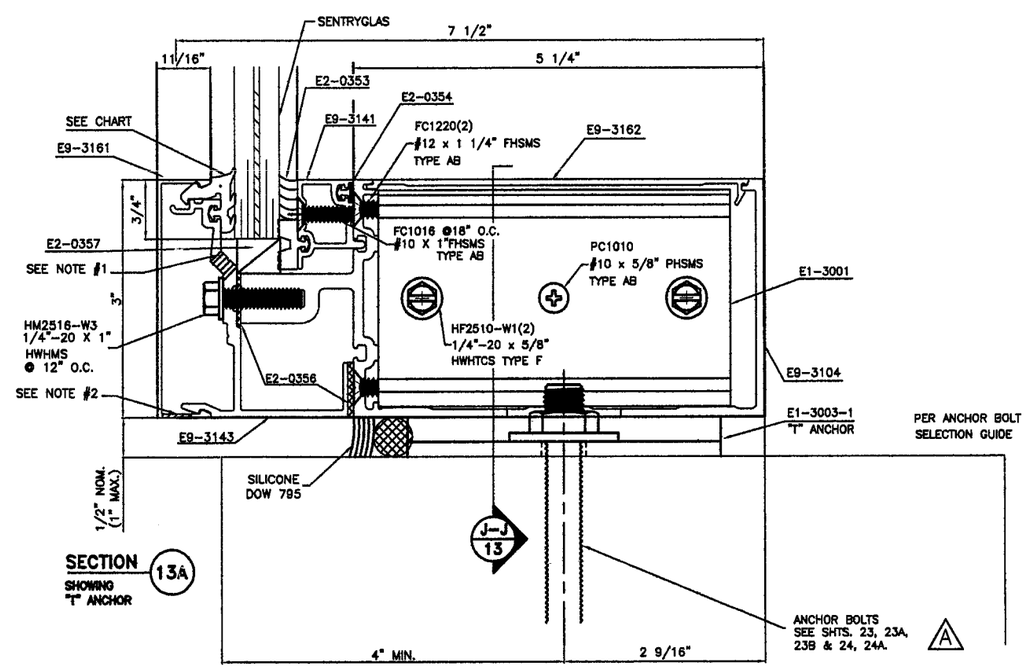

SECTION 13A
SHOWING "T" ANCHOR

WALTER A. TILLIT JR., P.E.
STRUCTURAL ENGINEER
FL. LIC.NO. 44167

APR 12 2006

TILTECO INC.

TILLIT TESTING & ENGINEERING COMPANY
6355 NW 36th STREET, STE. 305
MIAMI, FLORIDA 33166
FL E.B. LICENSE No. 0006719

PRODUCT REVISED
as complying with the Florida Building Code
Acceptance No 06-0306.01
Expiration Date 03/04/11
By
Miami Dade Product Control Division

RESERVED FOR METRO-DADE USE ONLY

YKK AP AMERICA, INC.
5630 GWALTNEY DRIVE
ATLANTA, GEORGIA 30336

SYSTEM: YHC 300 INSULATED GLAZING SYS.			SCALE: 1/2
DESCRIPTION: SILL DETAILS			
DRAWING NUMBER: YHC-300-OG-IL			REV.: A
APPROVED BY: JIA	DRAWN BY: RTB	DATE: 11/20/01	SHEET NO.: 8 OF 30

G:\SYSDWGS\YHC3000G\DADE\INSULATED\LARGEMISSILE\YHC300p08IL.DWG

REV.	DESCRIPTION	BY	DATE
A	SECTIONS 14 & 15	JIA	2/6/06
B	DOORS/STOREFRONTS DASHED LINES	L.G.	4/7/06

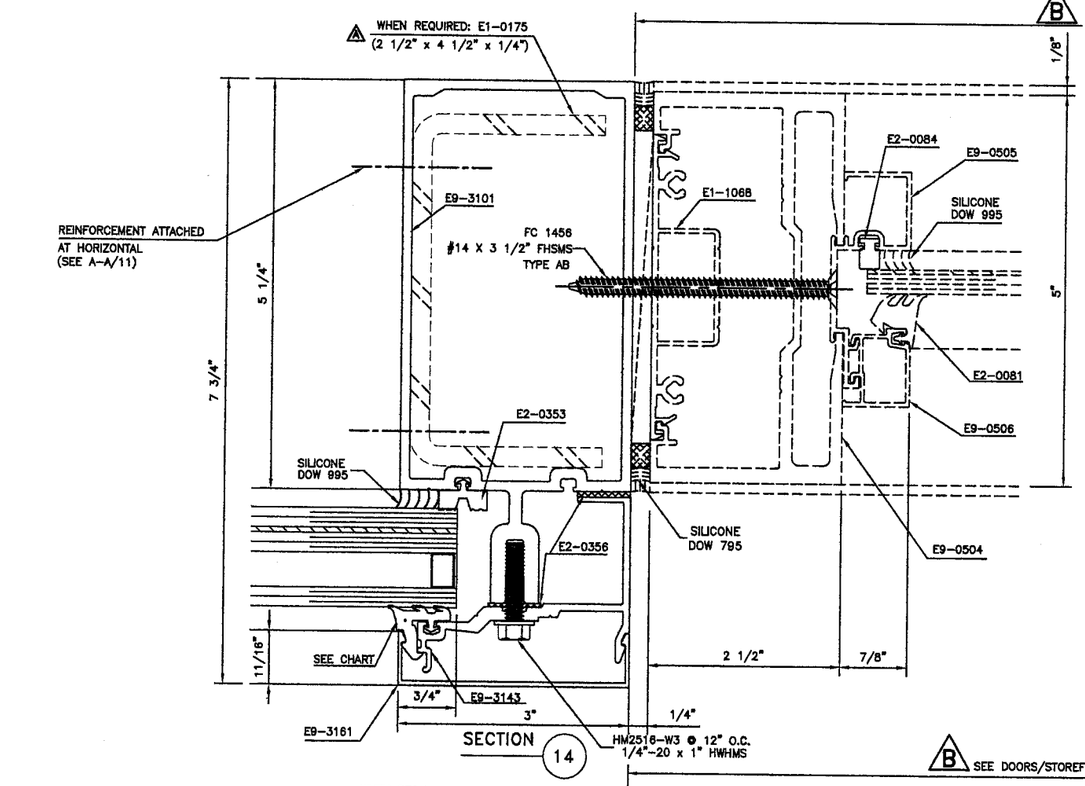

SECTION 14

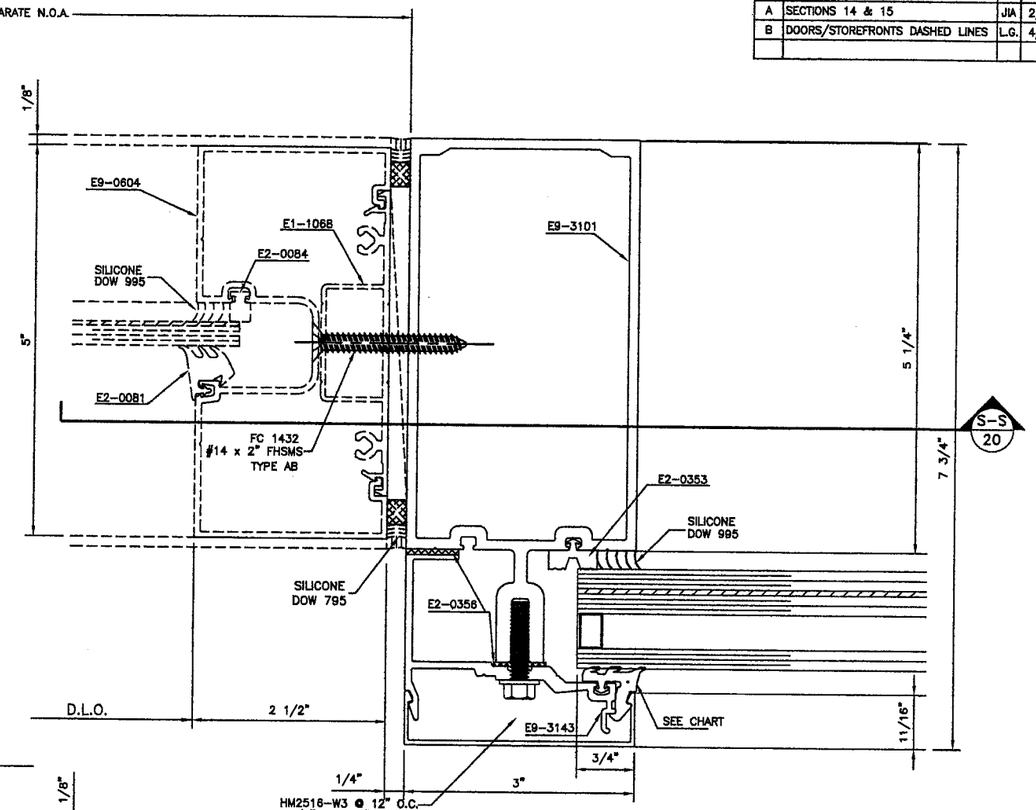

SECTION 16

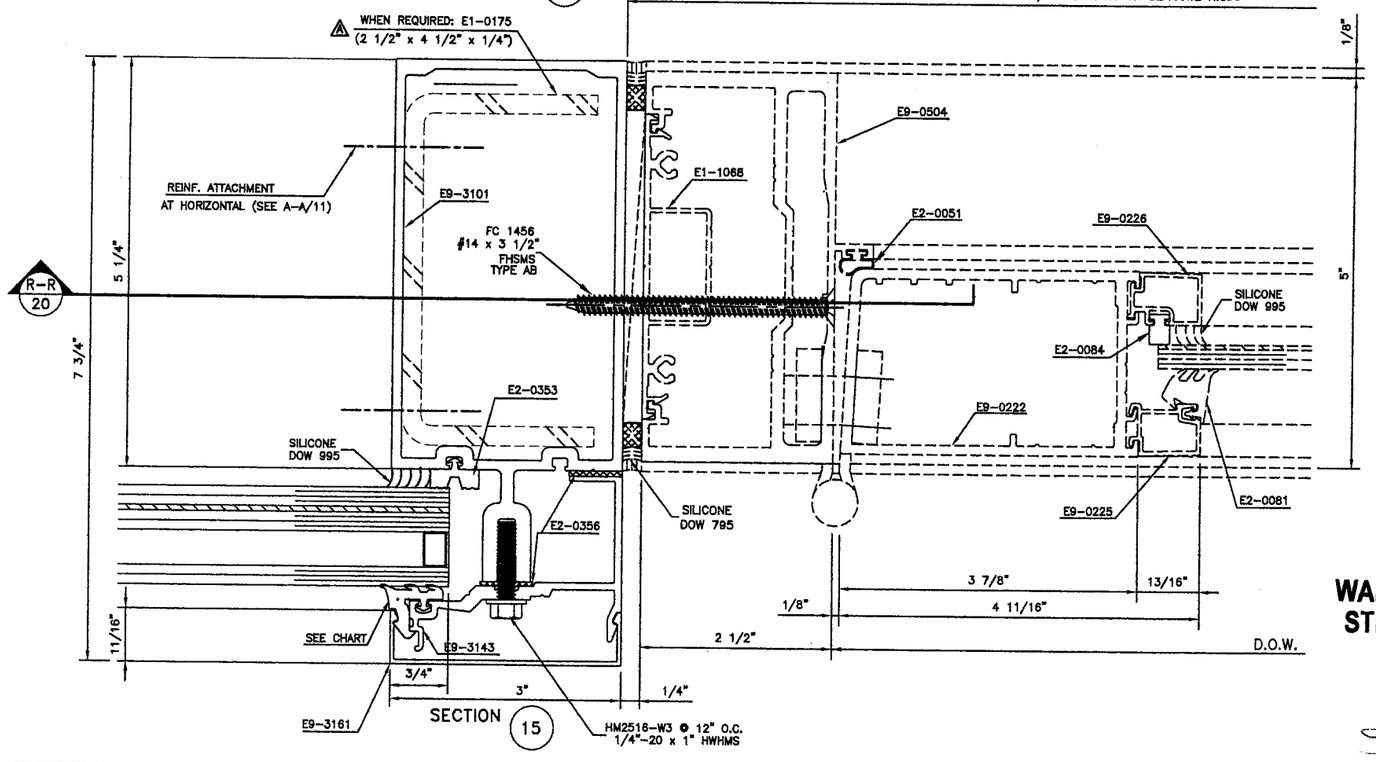

SECTION 15

NOTE:
1. EXTERIOR GASKET CHART

GL. NOMINAL THICKNESS	USE GASKET
SINGLE GLASS (ADAPTER E9-3141)	
5/16"	E2-0360
7/16"	E2-0352
9/16"	E2-0351
INSULATED GLASS	
1 1/16"	E2-0360
1 3/16"	E2-0352
1 5/16"	E2-0351

SEE DETAIL OF DOOR AND STOREFRONT IN THE CORRESPONDING NOTICE OF ACCEPTANCE

WALTER A. TILLIT JR., P.E.
STRUCTURAL ENGINEER
FL. LIC.NO. 44167

APR 12 2006

TILLECO INC.

TILLIT TESTING & ENGINEERING COMPANY
6355 NW 36th STREET, STE. 305
MIAMI, FLORIDA 33166
FL E.B. LICENSE No. 0006719

PRODUCT REVISED
as complying with the Florida Building Code
Acceptance No 06-0306.01
Expiration Date 03/04/11
By _____
Miami-Dade Product Control Division

RESERVED FOR METRO-DADE USE ONLY

YKK AP AMERICA, INC.
5630 GWALTNEY DRIVE
ATLANTA, GEORGIA 30336

SYSTEM	SCALE
YHC 300 INSULATED GLAZING SYS.	1/2

DESCRIPTION: STOREFRONT AND DOOR DETAILS

DRAWING NUMBER	REV.
YHC-300-OG-IL	A

APPROVED BY	DRAWN BY	DATE	SHEET NO.
JIA	RTB	8/5/02	9 OF 30

G:\SYSDWGS\YHC300OG\DADE\INSULATED\LARGEMISSILE\YHC300p09IL.DWG

REV.	DESCRIPTION	BY	DATE
A	SECTIONS 18 & 19	C.V.	2/28/06
B	DOORS/STOREFRONTS DASHED LINES	L.G.	4/7/06

TILLIT TESTING & ENGINEERING COMPANY
6355 NW 36th STREET, STE. 305
MIAMI, FLORIDA 33166
FL E.B. LICENSE No. 0006719

NOTE:
1. 5/16" DIA. WEEPHOLE. (3)/HORIZ. LOCATED (1) @ 3" FROM EACH END & (1) @ MID-SPAN.
2. 5/16" DIA. WEEPHOLE. (2)/HORIZ. LOCATED @ 1/3 D.L.O. FROM ENDS.
3. EXTERIOR GASKET CHART

GL. NOMINAL THICKNESS	USE GASKET
SINGLE GLASS (ADAPTER E9-3141)	
5/16"	E2-0360
7/16"	E2-0352
9/16"	E2-0351
INSULATED GLASS	
1 1/16"	E2-0360
1 3/16"	E2-0352
1 5/16"	E2-0351

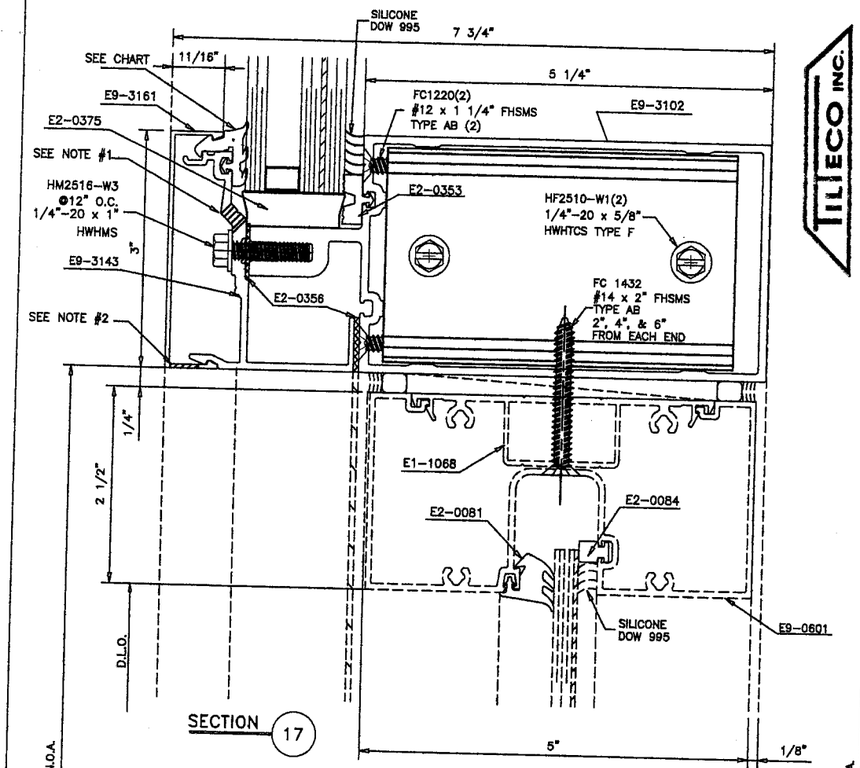

SECTION 17

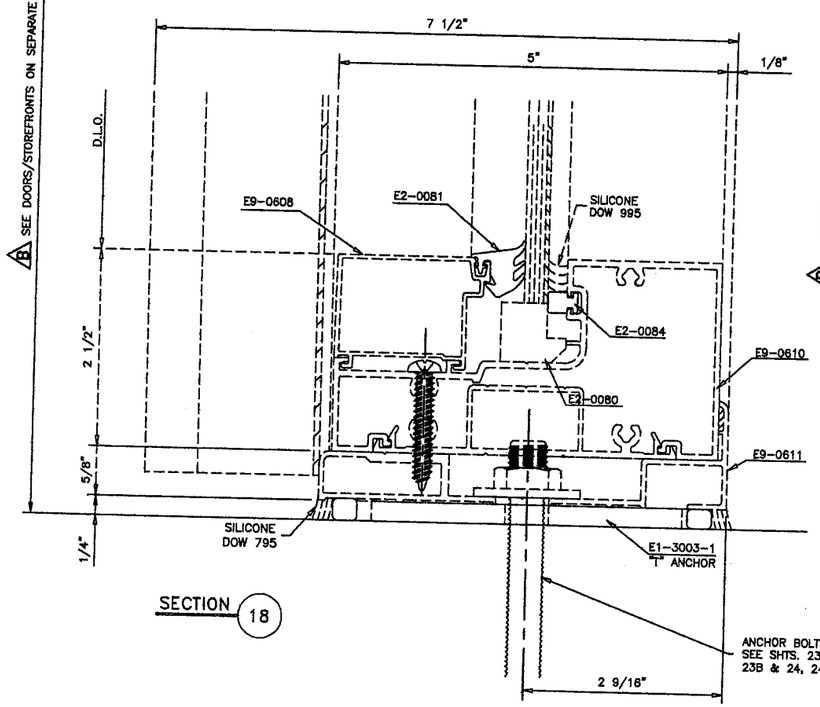

SECTION 18

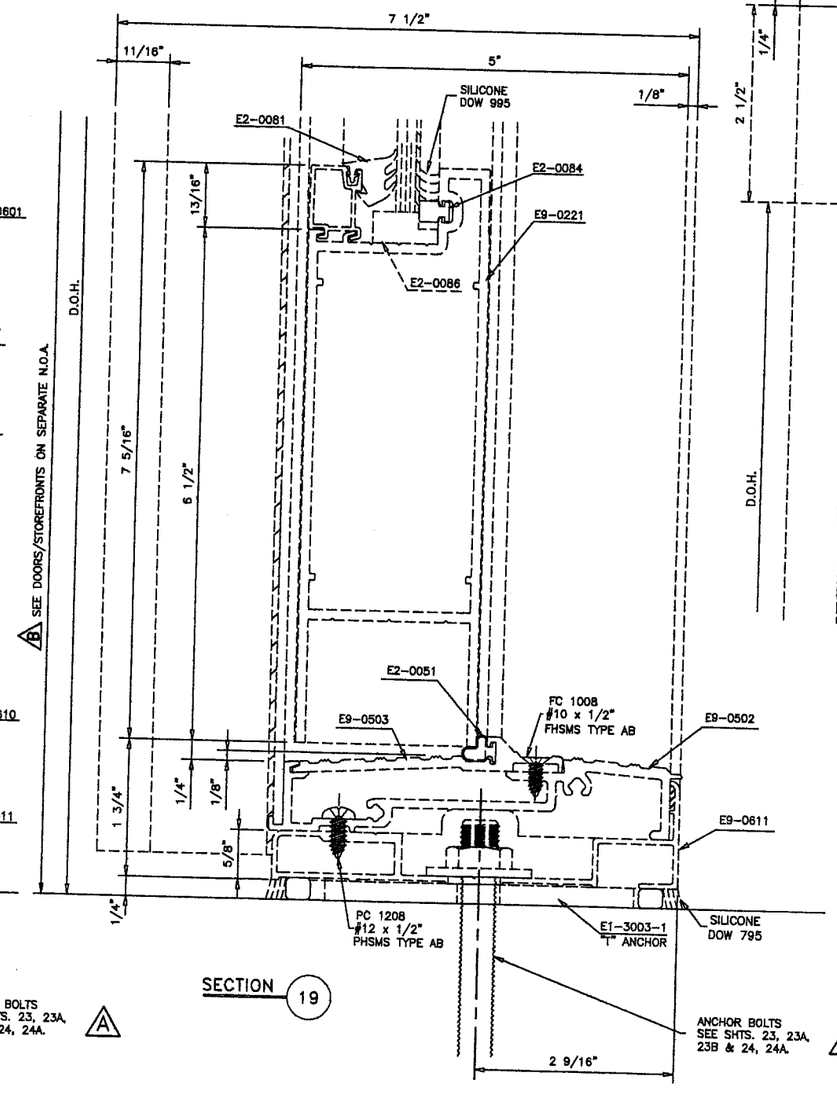

SECTION 19

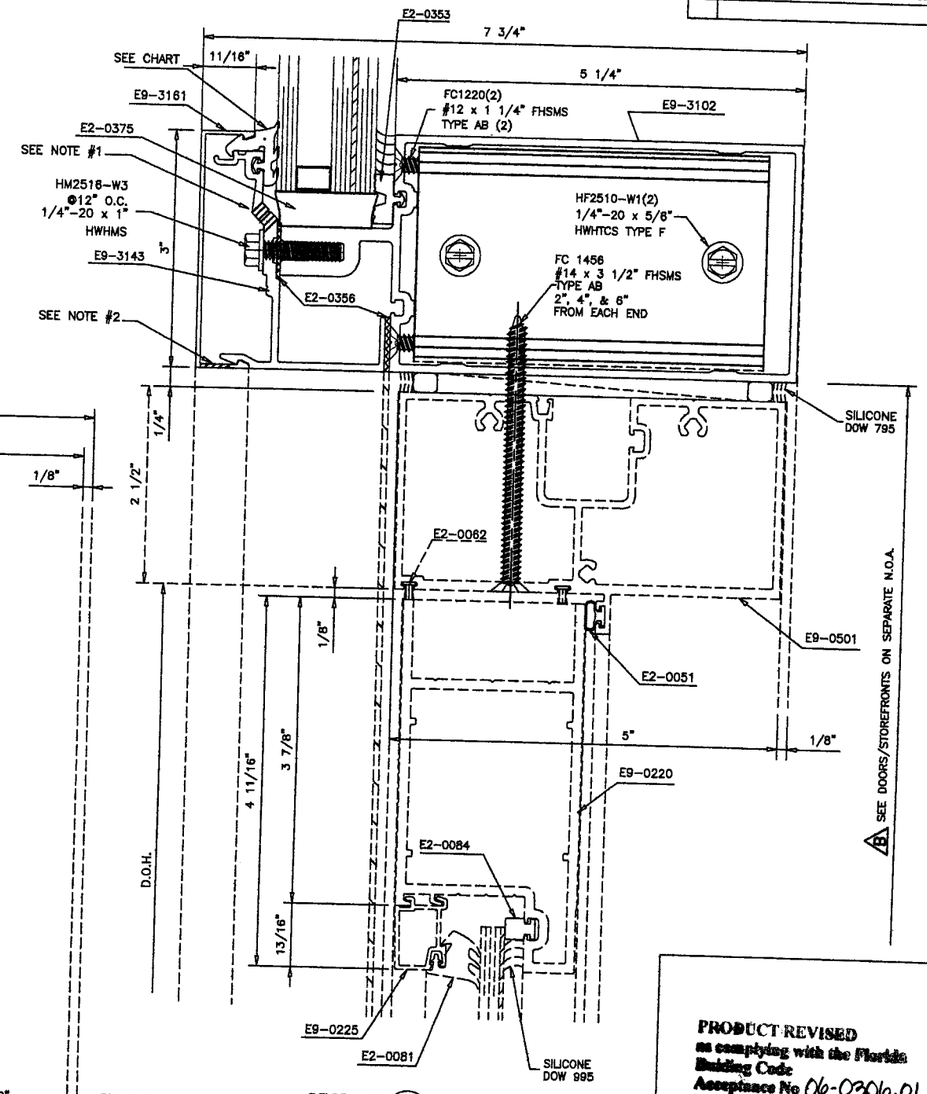

SECTION 20

SEE DOORS/STOREFRONTS ON SEPARATE N.O.A.

WALTER A. TILLIT JR., P.E.
STRUCTURAL ENGINEER
FL. LIC.NO. 44167

APR 12 2006

SEE DETAIL OF DOOR AND STOREFRONT IN THE CORRESPONDING NOTICE OF ACCEPTANCE

PRODUCT REVISED
as complying with the Florida Building Code
Acceptance No. 06-0306.01
Expiration Date 03/04/11
By
Miami-Dade Product Control Division

RESERVED FOR METRO-DADE USE ONLY

YKK AP America
YKK AP AMERICA, INC.
5630 GWALTNEY DRIVE
ATLANTA, GEORGIA 30336

SYSTEM	SCALE
YHC 300 INSULATED GLAZING SYS.	1/2
DESCRIPTION: STOREFRONT AND DOOR DETAILS	
DRAWING NUMBER: YHC-300-OG-IL	REV. A

APPROVED BY	DRAWN BY	DATE	SHEET NO.
JIA	RTB	8/5/02	10 OF 30

G:\SYSDWGS\YHC3000G\DADE\INSULATED\LARGEMISSILE\YHC300p10IL.DWG

REV.	DESCRIPTION	BY	DATE
A	SECTION A-A	C.V.	2/28/06

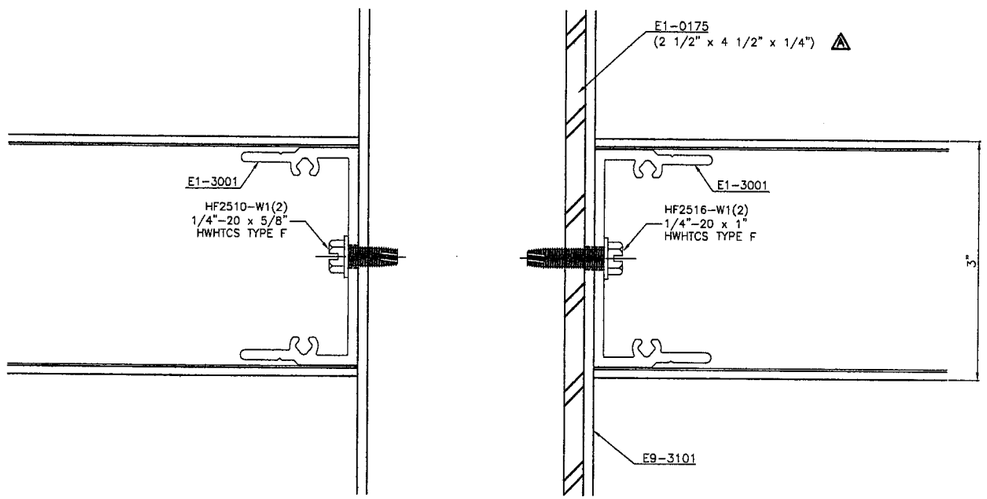

SECTION A-A

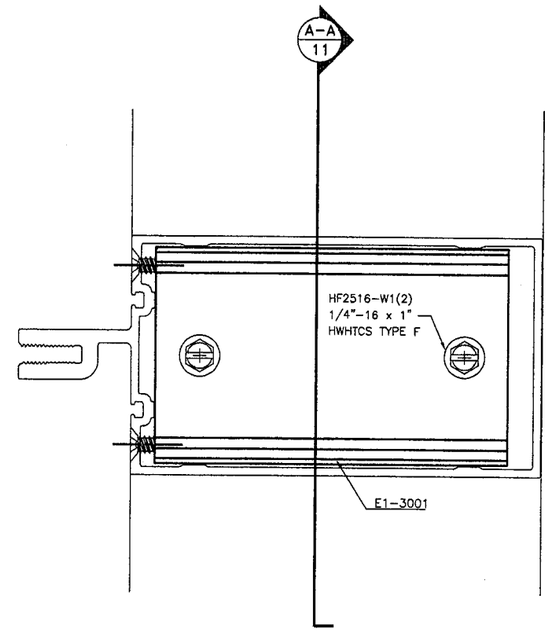

SECTION
CONNECTION "HORIZ.-VERT. W/REINF."

TILLITECO INC.
TILLIT TESTING & ENGINEERING COMPANY
6355 NW 36th STREET, STE. 305
MIAMI, FLORIDA 33166
FL E.B. LICENSE No. 0006719

PRODUCT REVISED
as complying with the Florida
Building Code
Acceptance No 06-0306.01
Expiration Date 03/04/11
By
Miami Dade Product Control
Division

RESERVED FOR METRO-DADE USE ONLY

YKK AP America
YKK AP AMERICA, INC.
5630 GWALTNEY DRIVE
ATLANTA, GEORGIA 30336

SYSTEM	SCALE
YHC 300 INSULATED GLAZING SYS.	1/2

DESCRIPTION: INTERMEDIATE DETAILS

DRAWING NUMBER	REV.
YHC-300-OG-IL	A

APPROVED BY	DRAWN BY	DATE	SHEET NO.
JIA	RTB	8/5/02	11 OF 30

WALTER A. TILLIT JR., P.E.
STRUCTURAL ENGINEER
FL. LIC.NO. 44167

APR 12 2006

G:\SYSDWGS\YHC3000G\DADE\INSULATED\LARGEMISSLE\YHC300p11IL.DWG

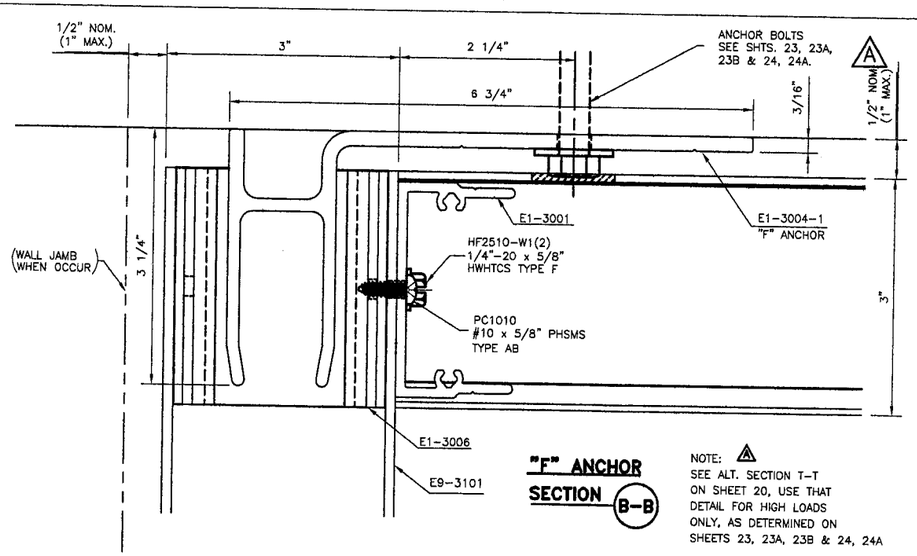

"F" ANCHOR
SECTION B-B

NOTE: A
SEE ALT. SECTION T-T
ON SHEET 20, USE THAT
DETAIL FOR HIGH LOADS
ONLY, AS DETERMINED ON
SHEETS 23, 23A, 23B & 24, 24A

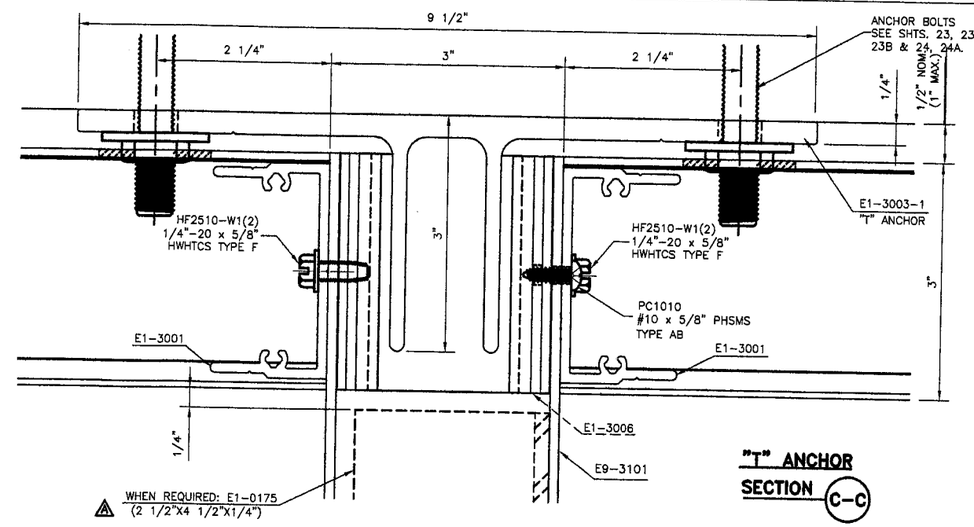

"T" ANCHOR
SECTION C-C

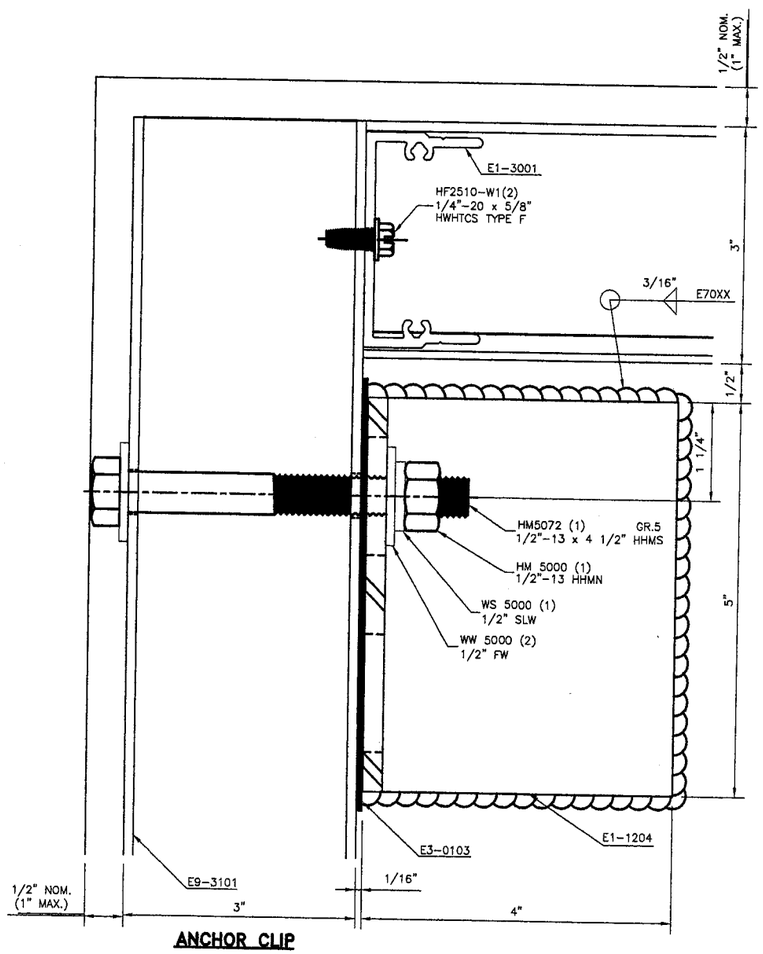

ANCHOR CLIP
SECTION
JAMB D-D

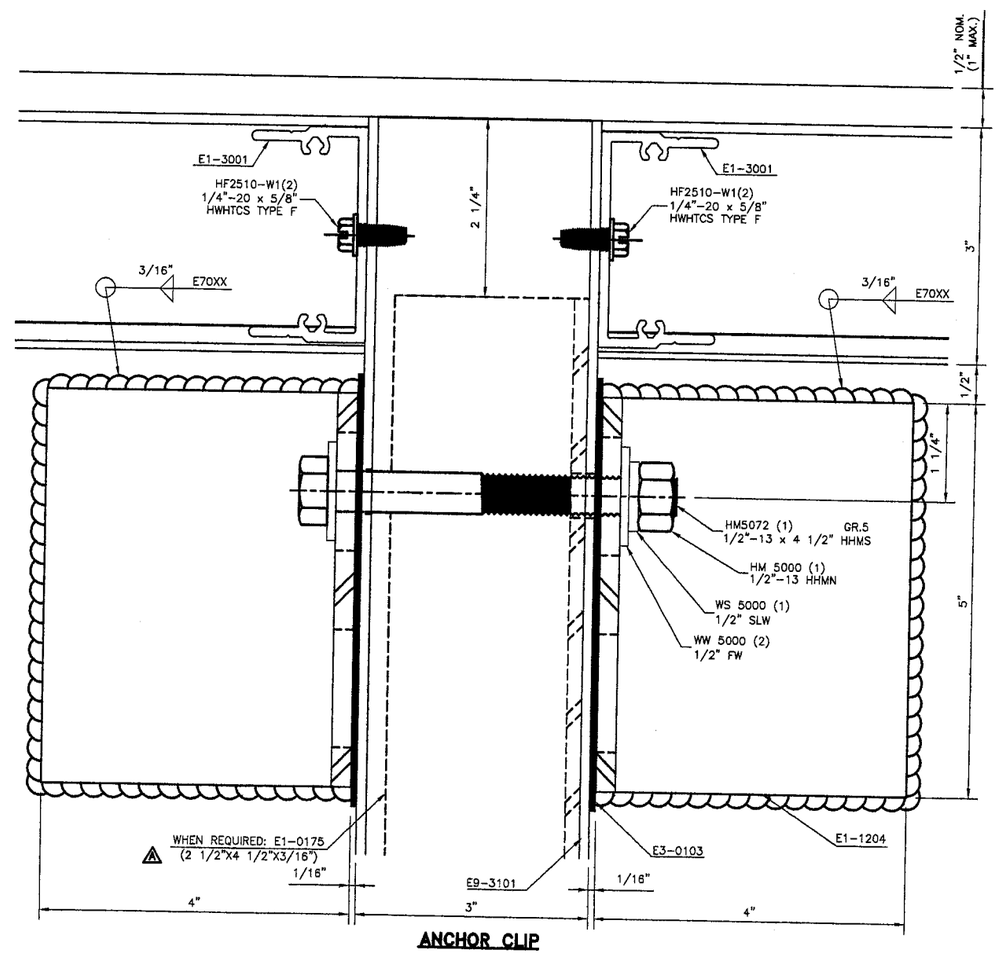

ANCHOR CLIP
SECTION
MULL. E-E

REV.	DESCRIPTION	BY	DATE
A	SECTIONS B-B, C-C, E-E	C.V.	2/28/06

TILTECO INC.

TILLIT TESTING & ENGINEERING COMPANY
6355 NW 36th STREET, STE. 305
MIAMI, FLORIDA 33166
FL E.B. LICENSE No. 0006719

WALTER A. TILLIT JR., P.E.
STRUCTURAL ENGINEER
FL. LIC.NO. 44167

APR 12 2006

PRODUCT REVISED
as complying with the Florida
Building Code
Acceptance No. 06-0306.01
Expiration Date 03/04/11
By
Miami Dade Product Control
Division

RESERVED FOR METRO-DADE USE ONLY

YKK ap America

YKK AP AMERICA, INC.
5630 GWALTNEY DRIVE
ATLANTA, GEORGIA 30336

SYSTEM	SCALE
YHC 300 INSULATED GLAZING SYS.	1/2

DESCRIPTION: HEAD ANCHOR DETAILS

DRAWING NUMBER	REV.
YHC-300-OG-IL	A

APPROVED BY	DRAWN BY	DATE	SHEET NO.
JIA	RTB	8/5/02	12 OF 30

G:\SYSDWGS\YHC300OG\DADE\INSULATED\LARGEMISSILE\YHC300p12IL.DWG

REV.	DESCRIPTION	BY	DATE
A	SECTIONS F-F, G-G, H-H, J-J	C.V.	2/28/06

"J" ANCHOR SECTION F-F

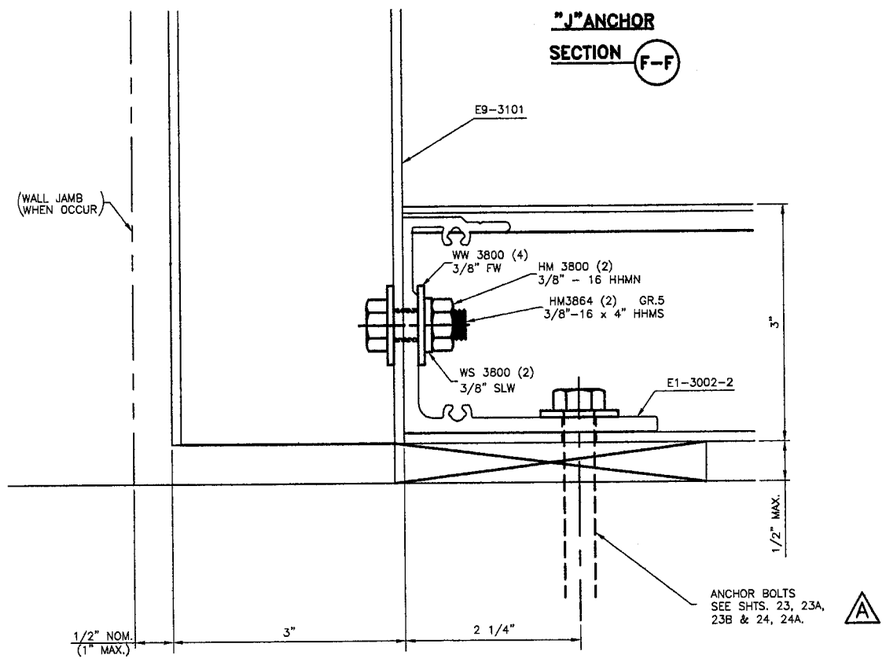

"J" ANCHOR SECTION G-G

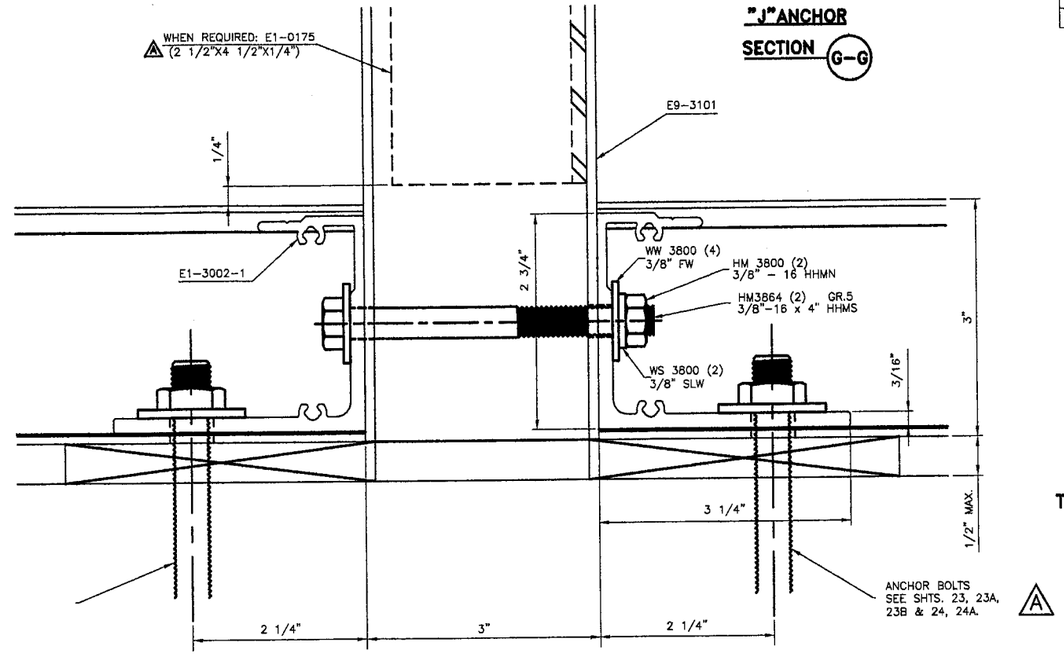

NOTE: A
SEE ALT. SECTION U-U ON SHEET 20, USE THAT DETAIL FOR HIGH LOADS ONLY, AS DETERMINED ON SHEETS 23, 23A, 23B & 24, 24A

"F" ANCHOR SECTION H-H

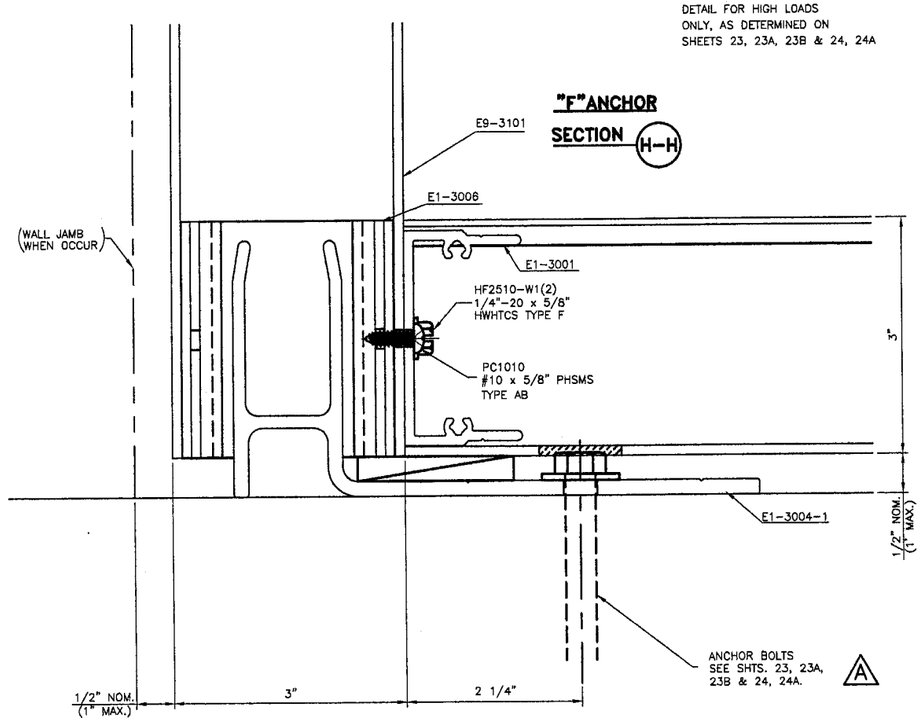

"T" ANCHOR SECTION J-J

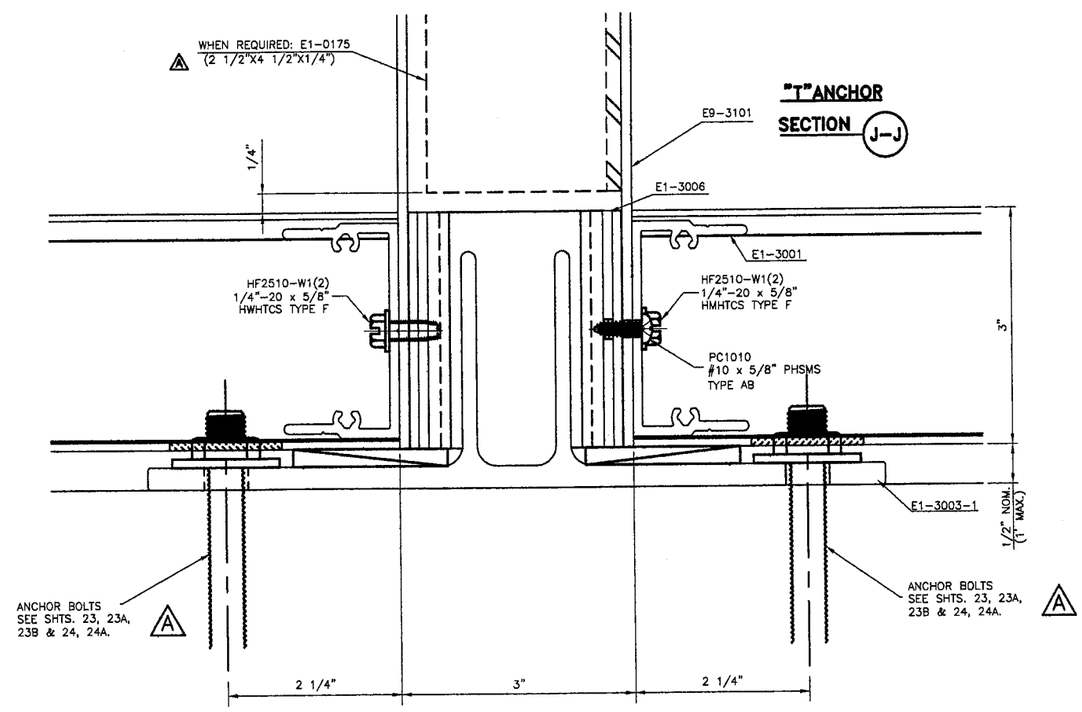

TILTECO INC.
TILLIT TESTING & ENGINEERING COMPANY
6355 NW 36th STREET, STE. 305
MIAMI, FLORIDA 33166
FL E.B. LICENSE No. 0006719

WALTER A. TILLIT JR., P.E.
STRUCTURAL ENGINEER
FL. LIC.NO. 44167

APR 13 2006

PRODUCT REVISED
as complying with the Florida Building Code
Acceptance No. 06-0306.01
Expiration Date 03/04/11
By
Miami-Dade Product Control Division

RESERVED FOR METRO-DADE USE ONLY

YKK ap America
YKK AP AMERICA, INC.
5630 GWALTNEY DRIVE
ATLANTA, GEORGIA 30336

SYSTEM	SCALE
YHC 300 INSULATED GLAZING SYS.	1/2

DESCRIPTION: SILL ANCHOR DETAILS

DRAWING NUMBER	REV.
YHC-300-OG-IL	A

APPROVED BY	DRAWN BY	DATE	SHEET NO.
JIA	RTB	8/5/02	13 OF 30

G:\SYSDWGS\YHC3000G\DADE\INSULATED\LARGEMISSILE\YHC300p13IL.DWG

REV.	DESCRIPTION	BY	DATE
A	NO CHANGE THIS SHEET	JIA	2/6/06
B	MINIMUM SPACING REQ'D.	C.V.	4/24/06

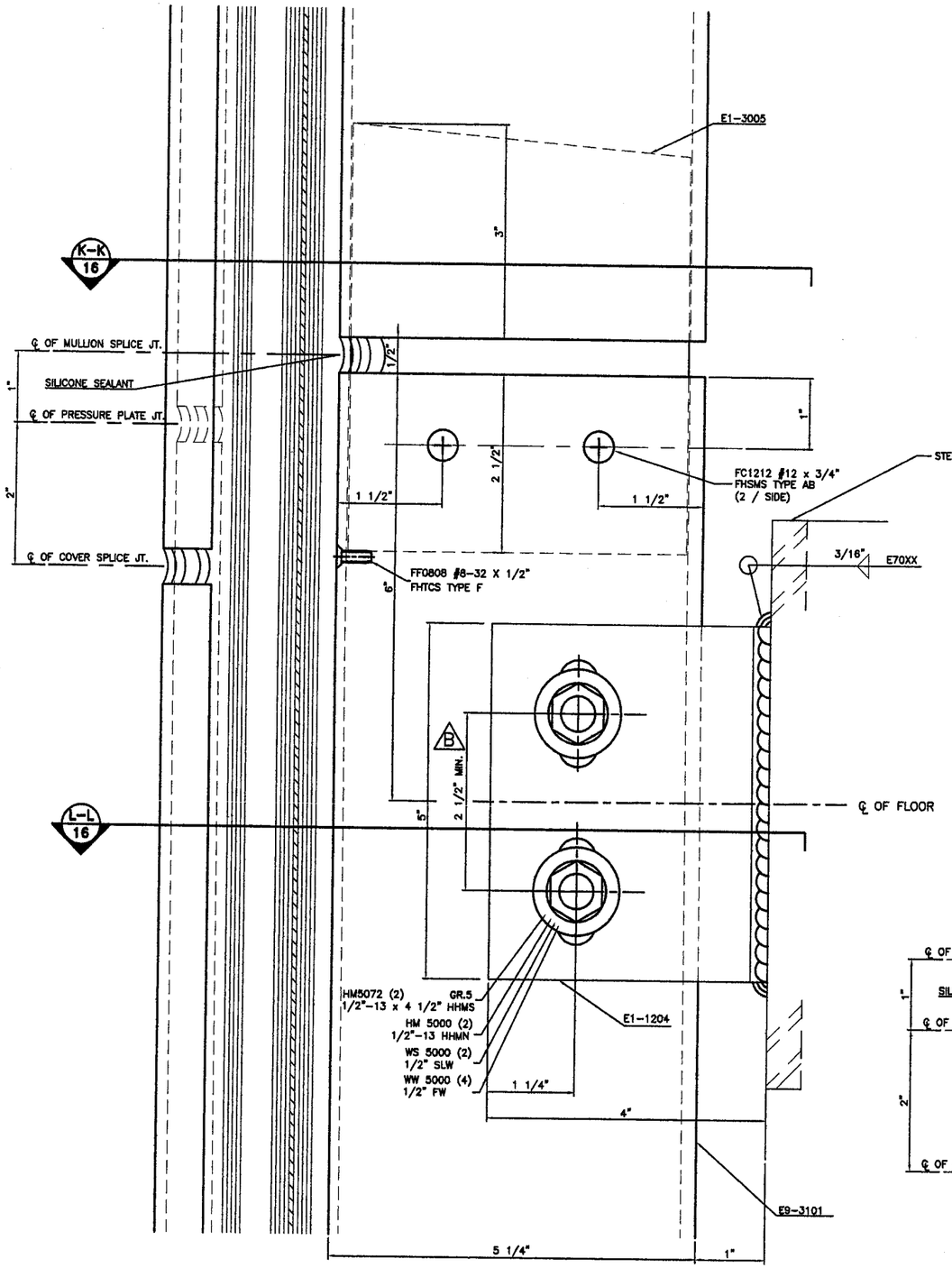

SPLICE & WINDLOAD ANCHOR CLIP

DETAIL 51 @ JAMB

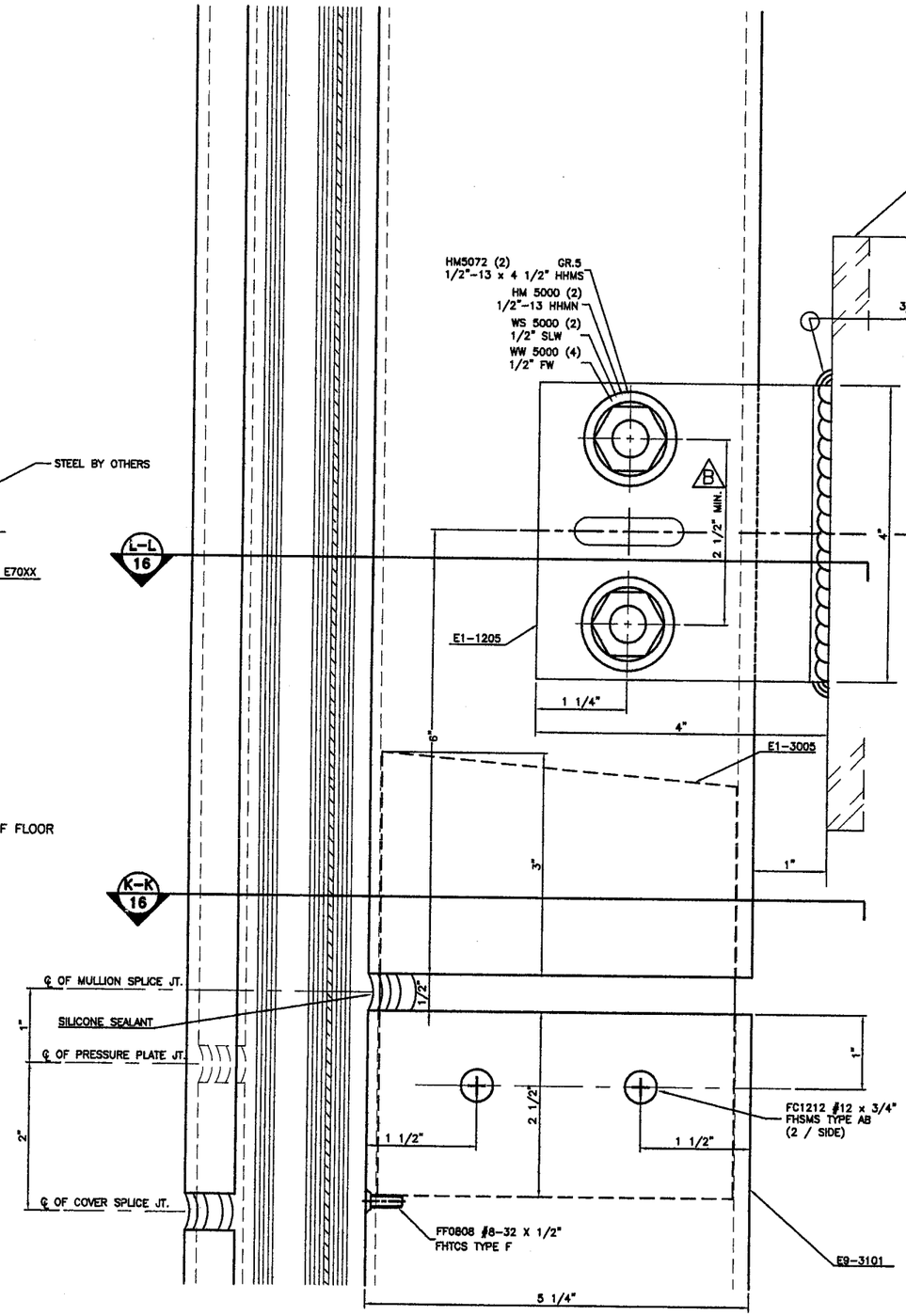

SPLICE & DEADLOAD ANCHOR CLIP

DETAIL 51A @ JAMB

TILTECO INC.

TILLIT TESTING & ENGINEERING COMPANY
6355 NW 36th STREET, STE. 305
MIAMI, FLORIDA 33166
FL E.B. LICENSE No. 0006719

WALTER A. TILLIT JR., P.E.
STRUCTURAL ENGINEER
FL. LIC.NO. 44167

APR 12 2006

PRODUCT REVISED
as complying with the Florida Building Code
Acceptance No 06-0306.01
Expiration Date 03/04/11
By
Miami Dade Product Control Division

RESERVED FOR METRO-DADE USE ONLY

YKK AP America

YKK AP AMERICA, INC.
5630 GWALTNEY DRIVE
ATLANTA, GEORGIA 30336

SYSTEM	SCALE
YHC 300 INSULATED GLAZING SYS.	1/2

DESCRIPTION: SPLICE AND ANCHOR CLIP DETAILS

DRAWING NUMBER	REV.
YHC-300-OG-IL	A

APPROVED BY	DRAWN BY	DATE	SHEET NO.
JIA	RTB	8/5/02	14 OF 30

G:\SYSDWGS\YHC3000G\DADE\INSULATED\LARGEMISSLE\YHC300p14IL.DWG

REV.	DESCRIPTION	BY	DATE
A	SECTIONS 52 & 52A	JIA	2/6/06
B	MINIMUM SPACING REQ'D.	C.V.	4/24/06

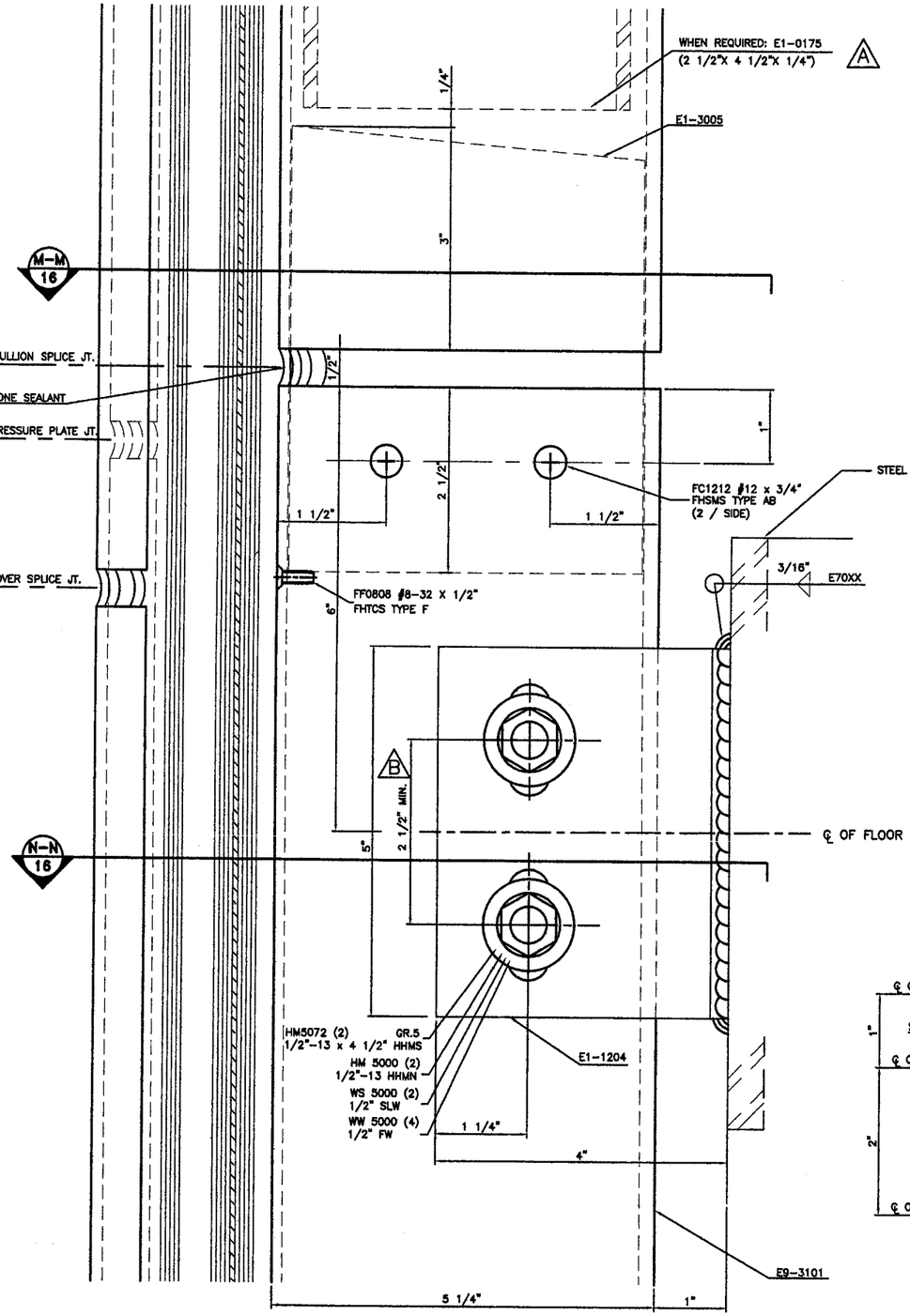

SPLICE & WINDLOAD ANCHOR CLIP

DETAIL 52
MULL.

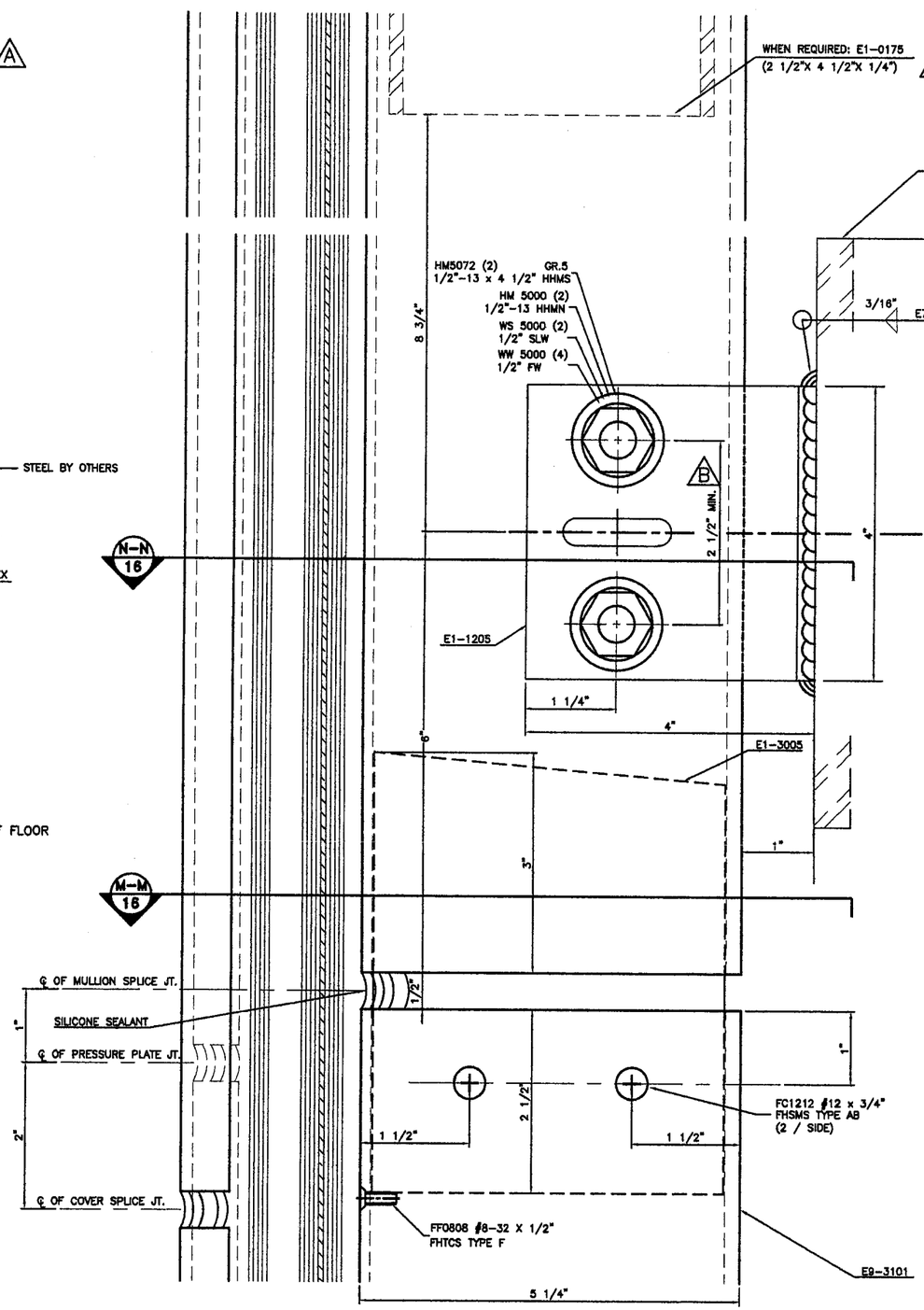

SPLICE & DEADLOAD ANCHOR CLIP

DETAIL 52A
MJLL.

WALTER A. TILLIT JR., P.E.
STRUCTURAL ENGINEER
FL. LIC.NO. 44167

APR 12 2006

TILTECO INC.

TILLIT TESTING & ENGINEERING COMPANY
6355 NW 36th STREET, STE. 305
MIAMI, FLORIDA 33166
FL E.B. LICENSE No. 0006719

PRODUCT REVISED
as complying with the Florida
Building Code
Acceptance No 06-0306.01
Expiration Date 03/04/11
By
Miami Dade Product Control
Division

RESERVED FOR METRO-DADE USE ONLY

YKK AP AMERICA, INC.
5630 GWALTNEY DRIVE
ATLANTA, GEORGIA 30336

SYSTEM			SCALE
YHC 300 INSULATED GLAZING SYS.			1/2
DESCRIPTION			
SPLICE AND ANCHOR CLIP DETAILS			
DRAWING NUMBER			REV.
YHC-300-OG-IL			A
APPROVED BY	DRAWN BY	DATE	SHEET NO.
JIA	RTB	8/5/02	15 OF 30

G:\SYSDWGS\YHC300G\DADE\INSULATED\LARGEMISSILE\YHC300p15IL.DWG

REV.	DESCRIPTION	BY	DATE
A	NO CHANGE THIS SHEET	JIA	2/6/06

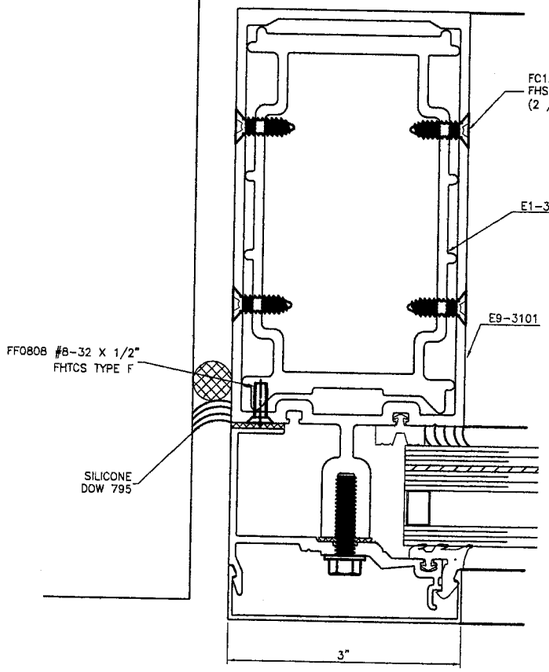

SECTION (K-K)
JAMB

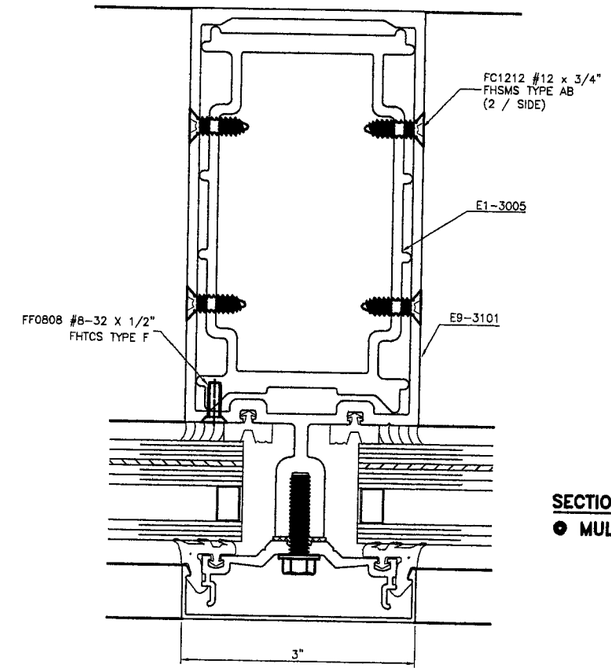

SECTION (M-M)
MULL.

TILLECO INC.

TILLIT TESTING & ENGINEERING COMPANY
6355 NW 36th STREET, STE. 305
MIAMI, FLORIDA 33166
FL E.B. LICENSE No. 0006719

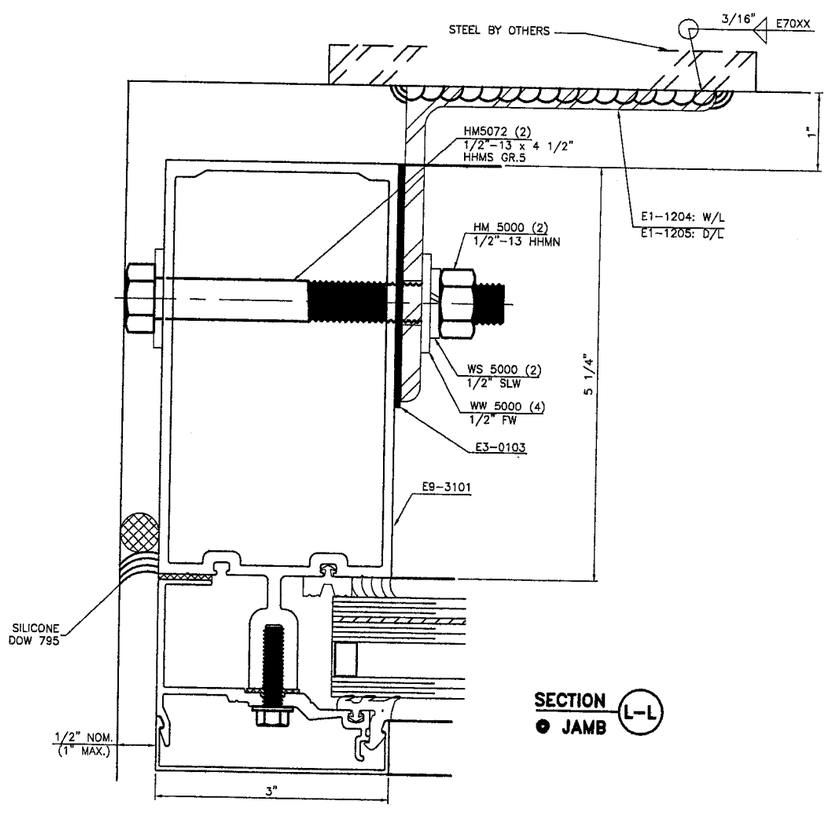

SECTION (L-L)
JAMB

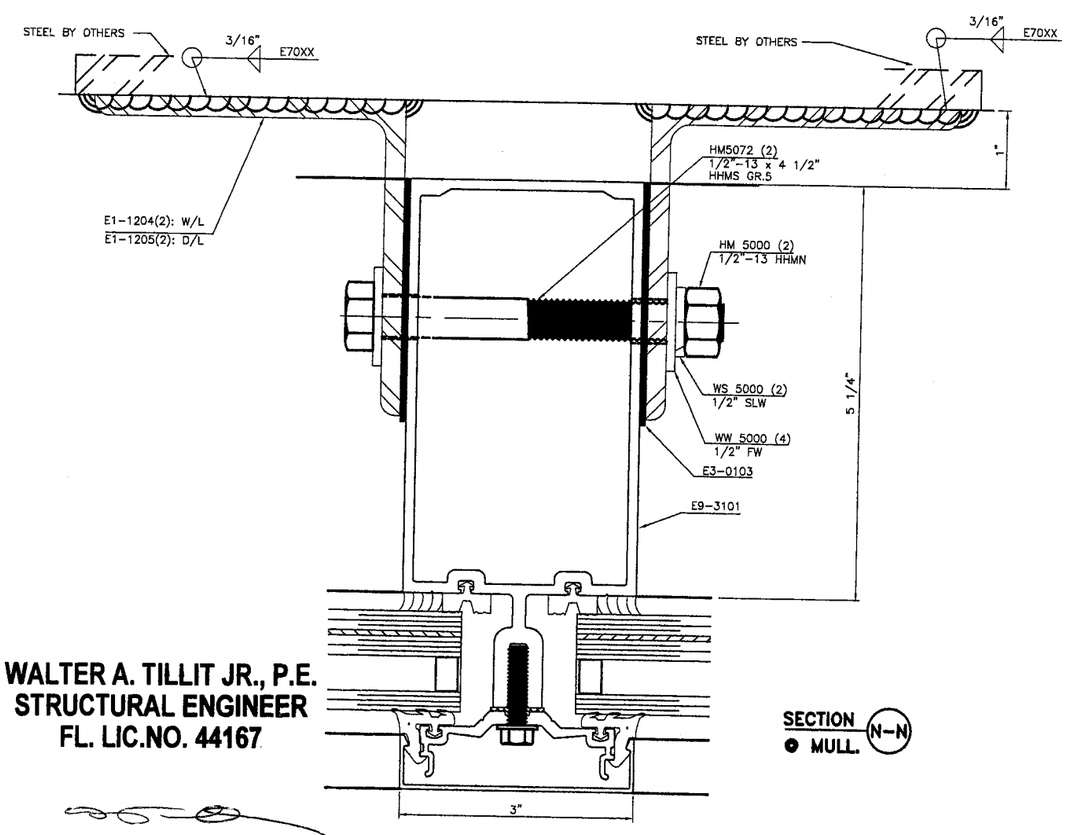

SECTION (N-N)
MULL.

WALTER A. TILLIT JR., P.E.
STRUCTURAL ENGINEER
FL. LIC.NO. 44167

APR 1 3 2006

PRODUCT REVISED
as complying with the Florida Building Code
Acceptance No 06-0306.01
Expiration Date 03/04/11
By
Miami Dade Product Control Division

RESERVED FOR METRO-DADE USE ONLY

YKK ap America

YKK AP AMERICA, INC.
5630 GWALTNEY DRIVE
ATLANTA, GEORGIA 30336

SYSTEM			SCALE
YHC 300 INSULATED GLAZING SYS.			1/2
DESCRIPTION			
SPLICE AND ANCHOR CLIP DETAILS			
DRAWING NUMBER			REV.
YHC-300-OG-IL			A
APPROVED BY	DRAWN BY	DATE	SHEET NO.
JIA	RTB	8/5/02	16 OF 30

G:\SYSDWGS\YHC300OG\DADE\INSULATED\LARGEMISSILE\YHC300p16IL.DWG

REV.	DESCRIPTION	BY	DATE
A	NO CHANGE THIS SHEET	JIA	2/6/06

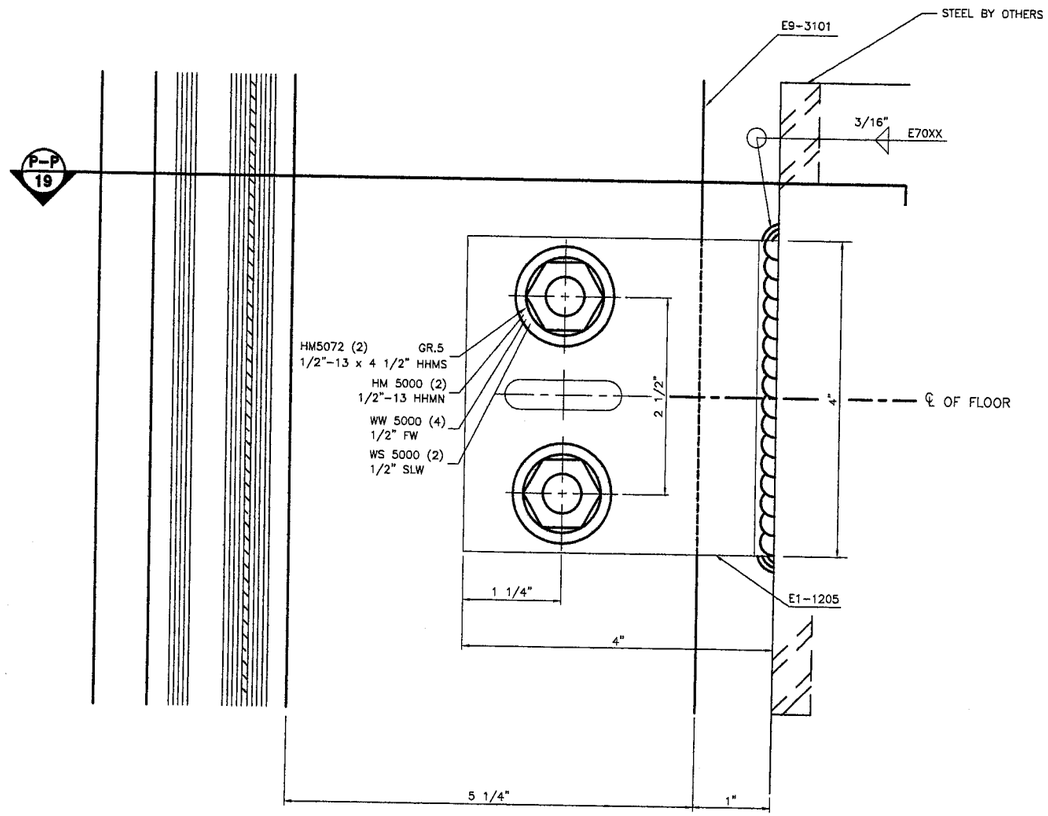

DEADLOAD ANCHOR CLIP

DETAIL 53

● JAMB

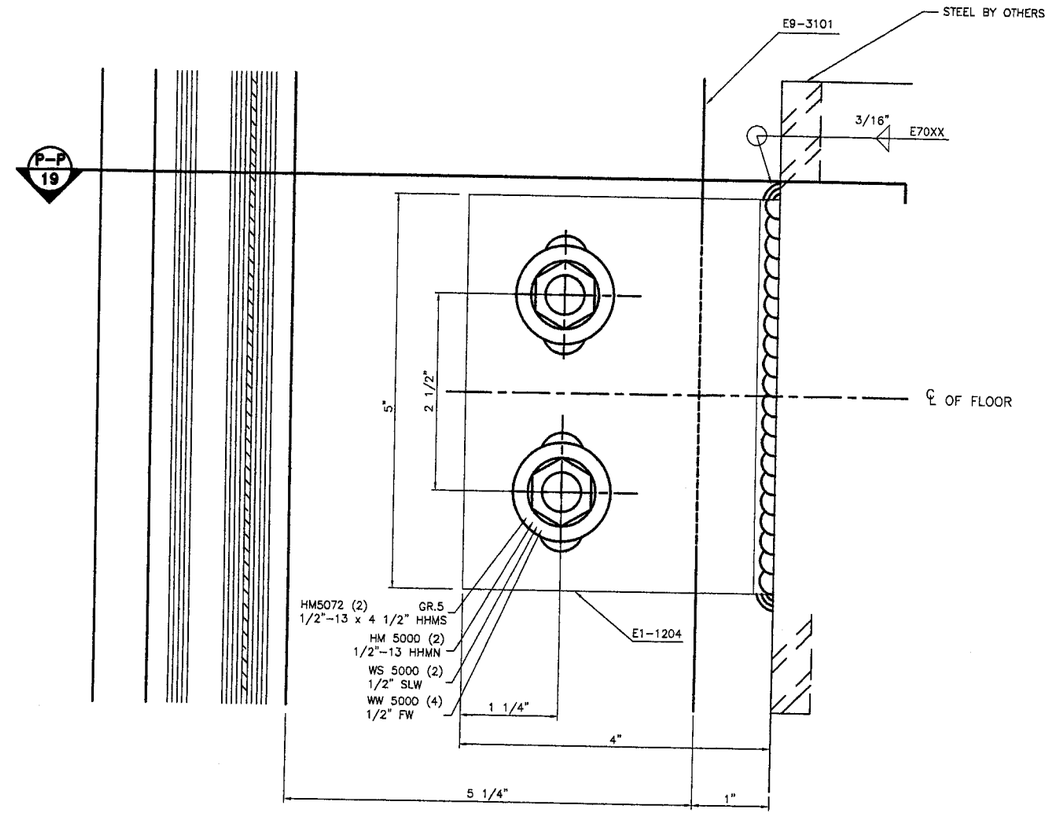

WINDLOAD ANCHOR CLIP

DETAIL 53A

● JAMB

PRODUCT REVISED
as complying with the Florida Building Code
Acceptance No. 06-0306.01
Expiration Date 03/04/11
By
Miami Dade Product Control Division

RESERVED FOR METRO-DADE USE ONLY

YKK ap America

YKK AP AMERICA, INC.
5630 GWALTNEY DRIVE
ATLANTA, GEORGIA 30336

WALTER A. TILLIT JR., P.E.
STRUCTURAL ENGINEER
FL. LIC.NO. 44167

APR 1 3 2006

TILTECO INC.

TILLIT TESTING & ENGINEERING COMPANY
6355 NW 36th STREET, STE. 305
MIAMI, FLORIDA 33166
FL E.B. LICENSE No. 0006719

SYSTEM	SCALE
YHC 300 INSULATED GLAZING SYS.	1/2
DESCRIPTION: MID-ANCHOR CLIP DETAILS	
DRAWING NUMBER: YHC-300-OG-IL	REV. A

APPROVED BY	DRAWN BY	DATE	SHEET NO.
JIA	RTB	8/5/02	17 OF 30

G:\SYSDWGS\YHC300OG\DADE\INSULATED\LARGEMISSILE\YHC300p17IL.DWG

REV.	DESCRIPTION	BY	DATE
A	NO CHANGE THIS SHEET	JIA	2/6/06

TILTECO INC.

TILLIT TESTING & ENGINEERING COMPANY
6355 NW 36th STREET, STE. 305
MIAMI, FLORIDA 33166
FL E.B. LICENSE No. 0006719

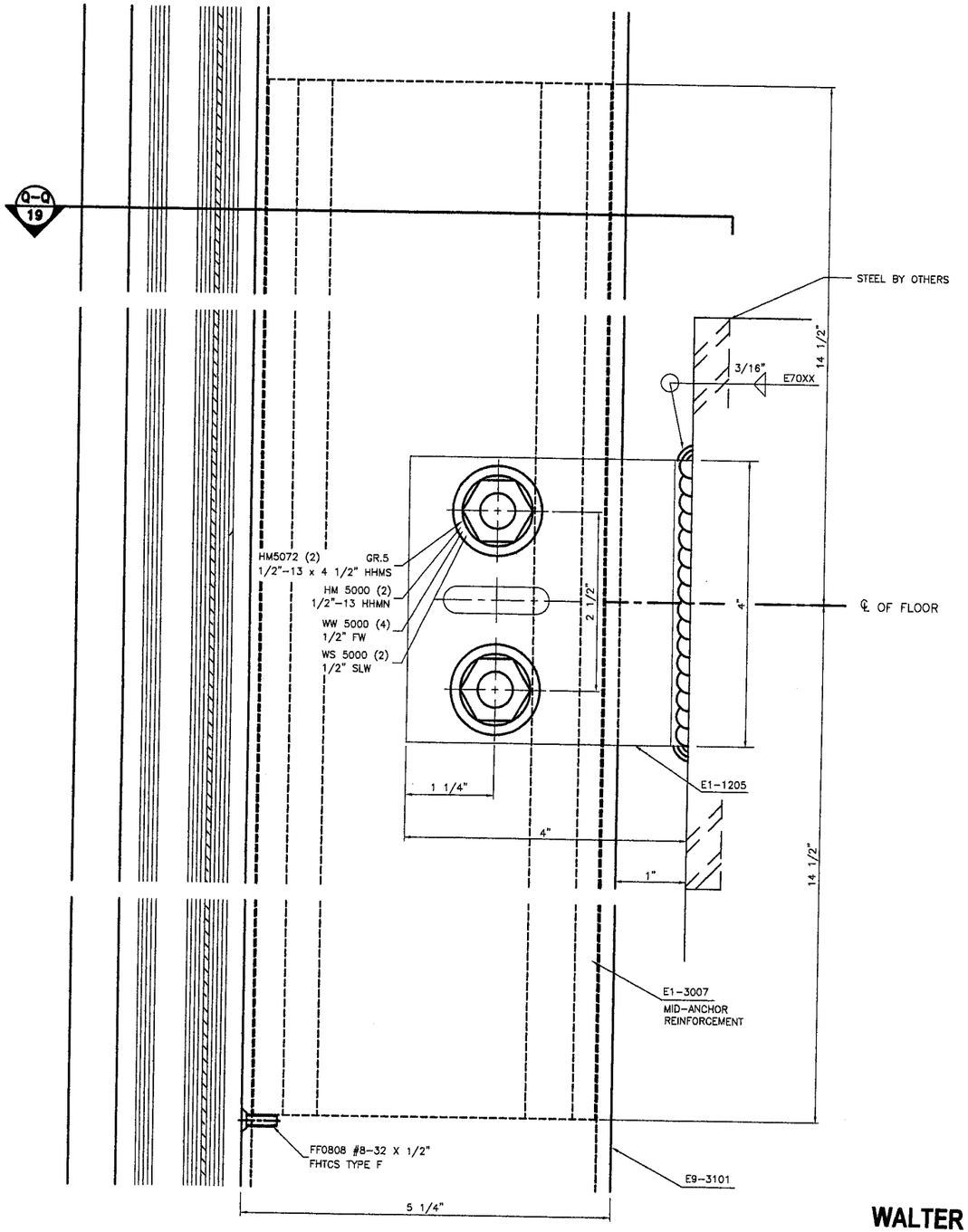

DEADLOAD ANCHOR CLIP

DETAIL 54

● MULL.

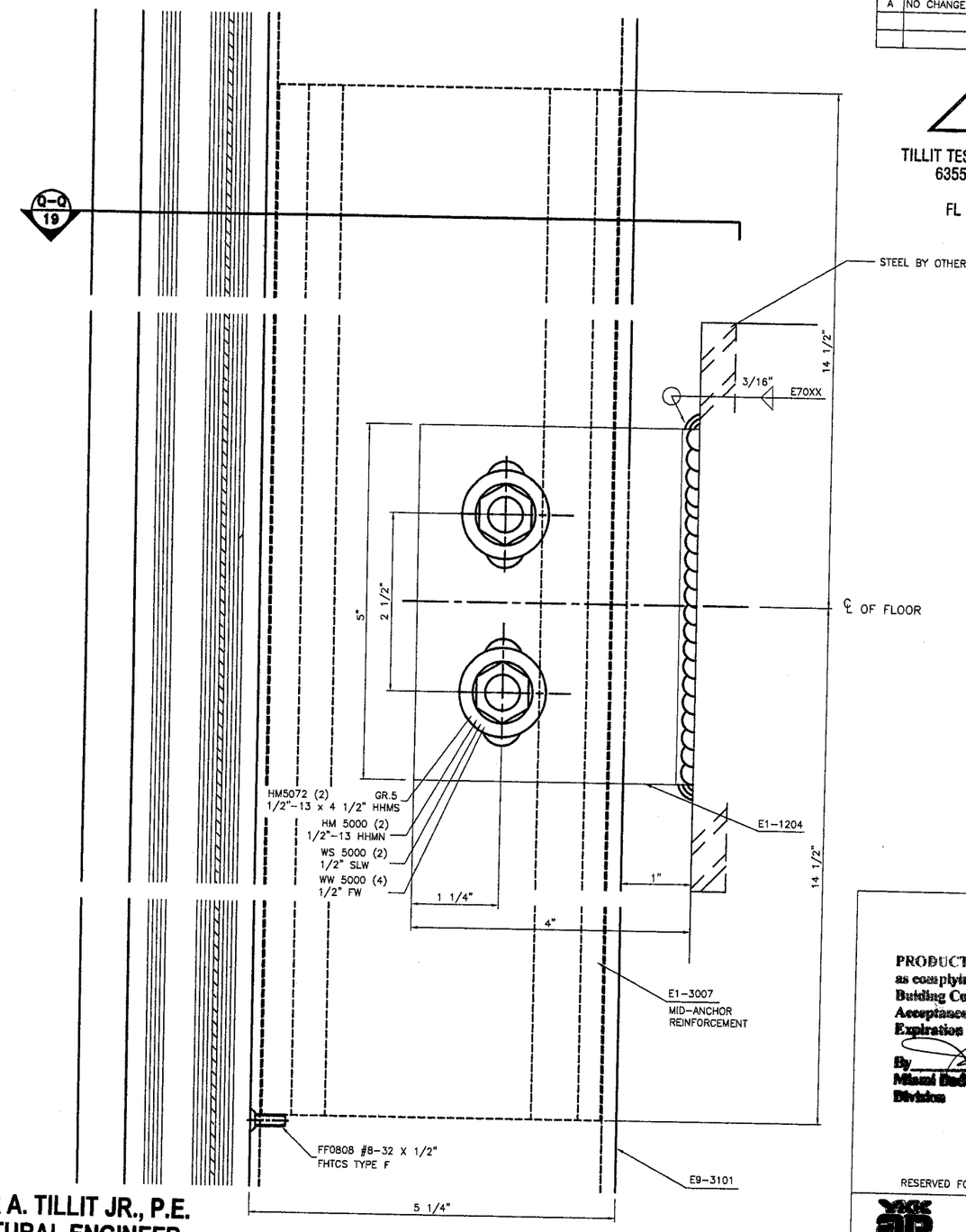

WINDLOAD ANCHOR CLIP

DETAIL 54A

● MULL.

WALTER A. TILLIT JR., P.E.
STRUCTURAL ENGINEER
FL. LIC.NO. 44167

APR 12 2005

PRODUCT REVISED
as complying with the Florida Building Code
Acceptance No. 06-0306.01
Expiration Date 03/04/11
By
Miami Dade Product Control Division

RESERVED FOR METRO-DADE USE ONLY

YKK ap America
YKK AP AMERICA, INC.
5630 GWALTNEY DRIVE
ATLANTA, GEORGIA 30336

SYSTEM	SCALE
YHC 300 INSULATED GLAZING SYS.	1/2

DESCRIPTION: MID-ANCHOR CLIP DETAILS

DRAWING NUMBER	REV.
YHC-300-OG-IL	A

APPROVED BY	DRAWN BY	DATE	SHEET NO.
JIA	RTB	8/5/02	18 OF 30

G:\SYSDWGS\YHC3000G\DADE\INSULATED\LARGEMISSILE\YHC300p18IL.DWG

REV.	DESCRIPTION	BY	DATE
A	NO CHANGE THIS SHEET	JIA	2/6/06

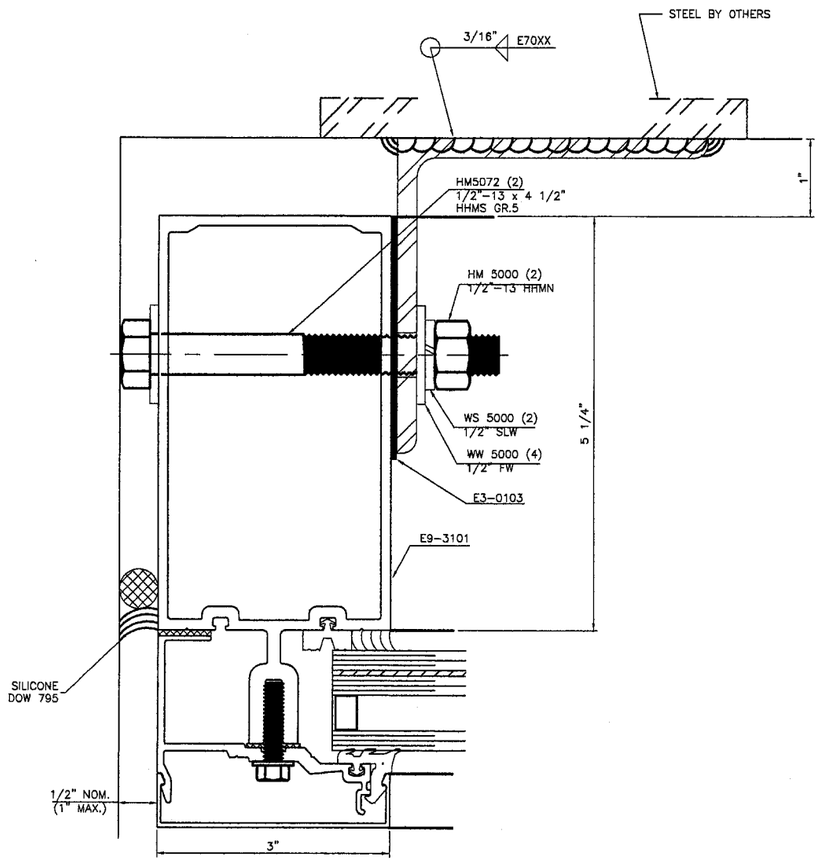

SECTION P-P

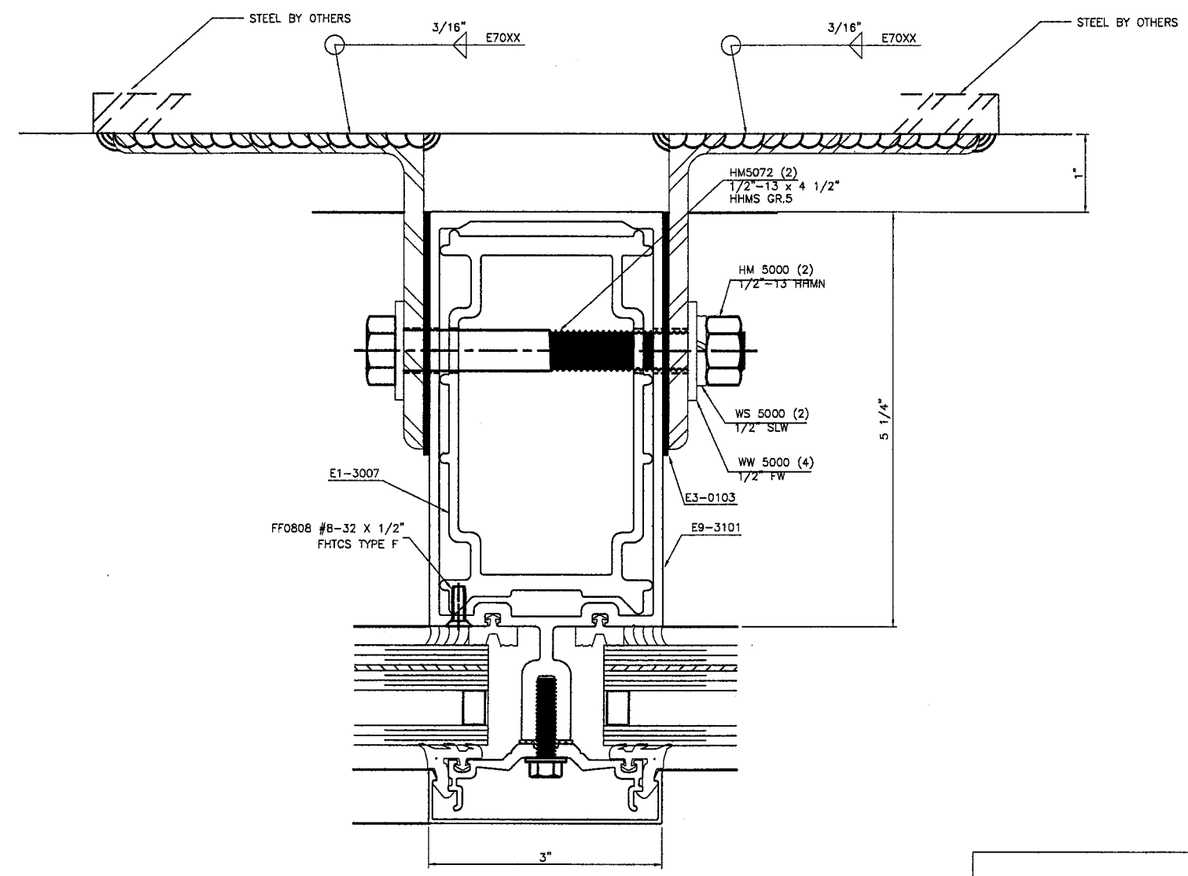

SECTION Q-Q

PRODUCT REVISED
as complying with the Florida
Building Code
Acceptance No. 06-0306.01
Expiration Date 03/04/11
By
Miami Dade Product Control
Division

RESERVED FOR METRO-DADE USE ONLY

WALTER A. TILLIT JR., P.E.
STRUCTURAL ENGINEER
FL. LIC.NO. 44167

APR 13 2006

TILLECO INC.

TILLIT TESTING & ENGINEERING COMPANY
6355 NW 36th STREET, STE. 305
MIAMI, FLORIDA 33166
FL E.B. LICENSE No. 0006719

YKK ap America

YKK AP AMERICA, INC.
5630 GWALTNEY DRIVE
ATLANTA, GEORGIA 30336

SYSTEM			SCALE
YHC 300 INSULATED GLAZING SYS.			1/2
DESCRIPTION			
SPLICE AND ANCHOR CLIP DETAILS			
DRAWING NUMBER			REV.
YHC-300-OG-IL			A
APPROVED BY	DRAWN BY	DATE	SHEET NO.
JIA	RTB	8/5/02	19 OF 30

G:\SYSDWGS\YHC300OG\DADE\INSULATED\LARGEMISSILE\YHC300p19IL.DWG

REV.	DESCRIPTION	BY	DATE
A	SECTIONS R-R, S-S, T-T, U-U	JIA	2/6/06

WALTER A. TILLIT JR., P.E.
STRUCTURAL ENGINEER
FL. LIC.NO. 44167

APR 12 2006

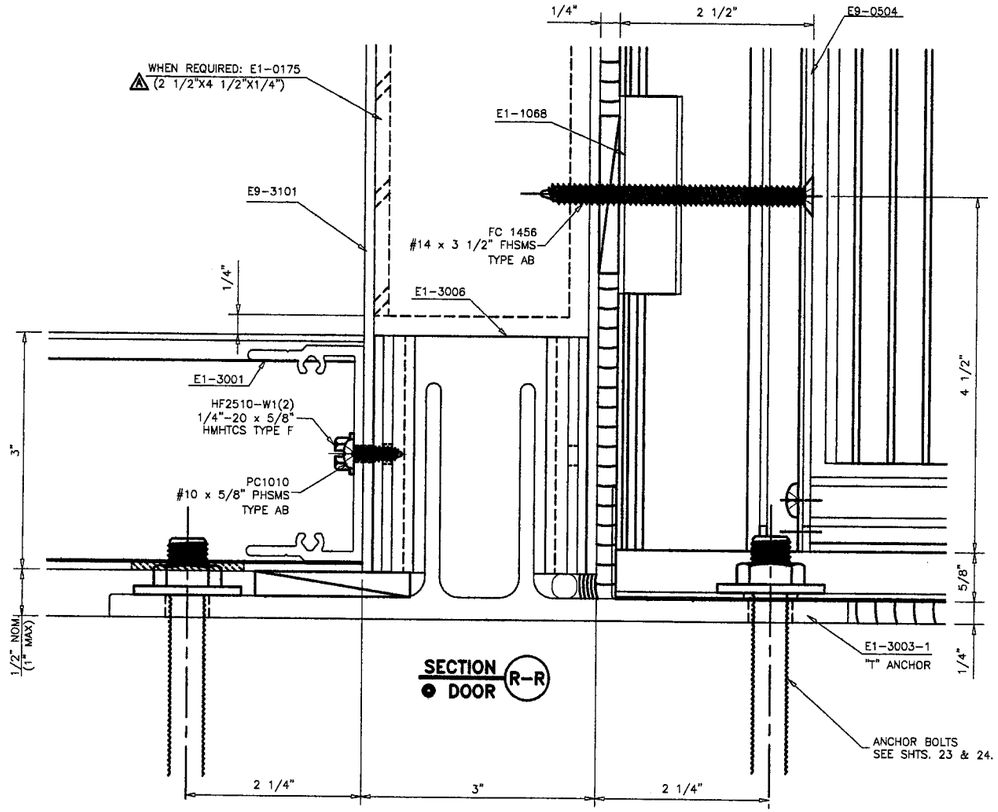

SECTION R-R
DOOR

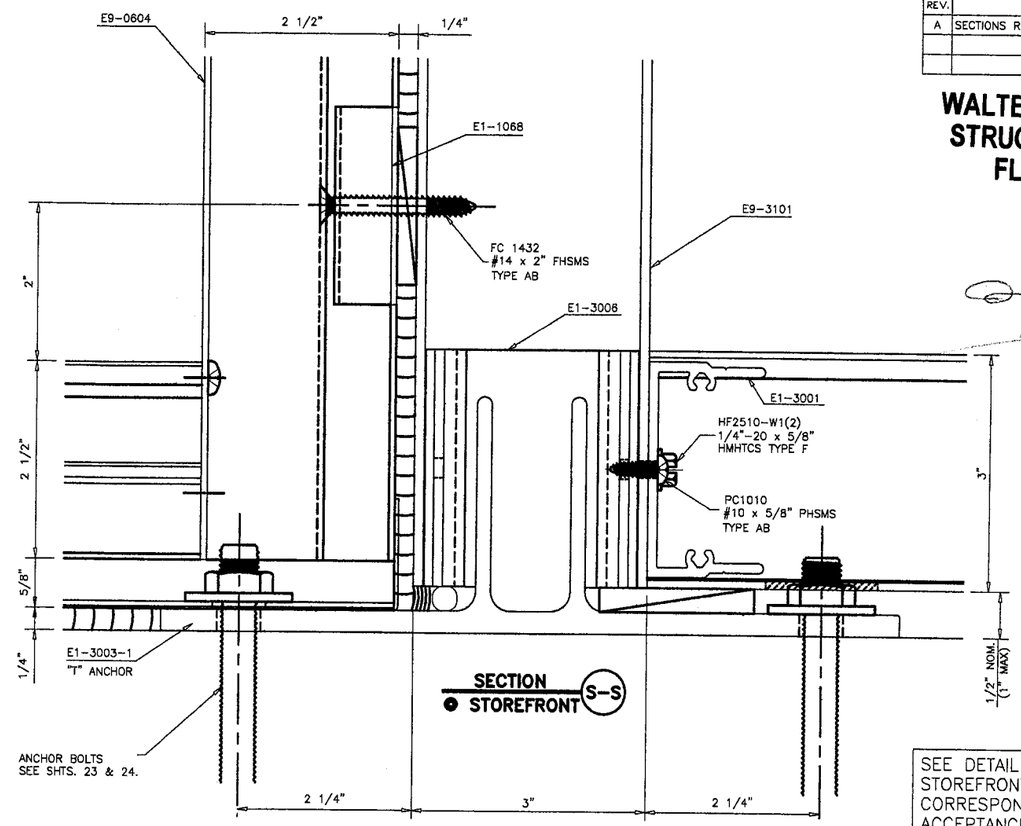

SECTION S-S
STOREFRONT

SEE DETAIL OF DOOR AND STOREFRONT IN THE CORRESPONDING NOTICE OF ACCEPTANCE

TILLECO INC.
TILLIT TESTING & ENGINEERING COMPANY
6355 NW 36th STREET, STE. 305
MIAMI, FLORIDA 33166
FL E.B. LICENSE No. 0006719

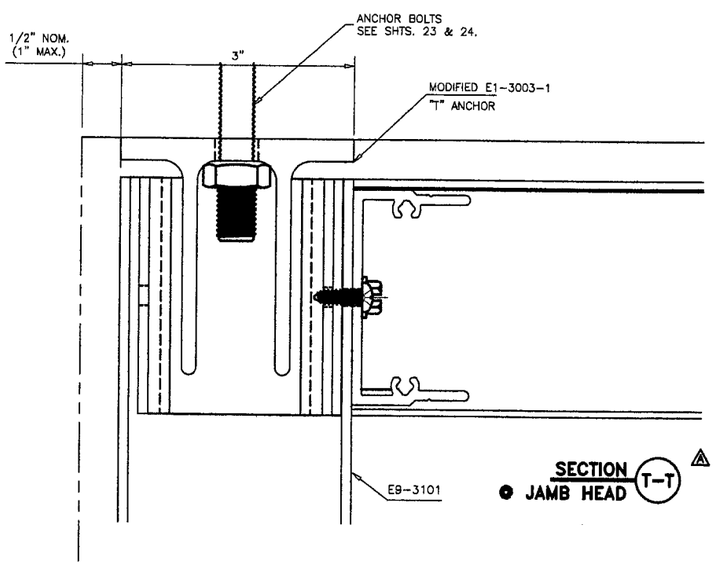

SECTION T-T
JAMB HEAD
NEW

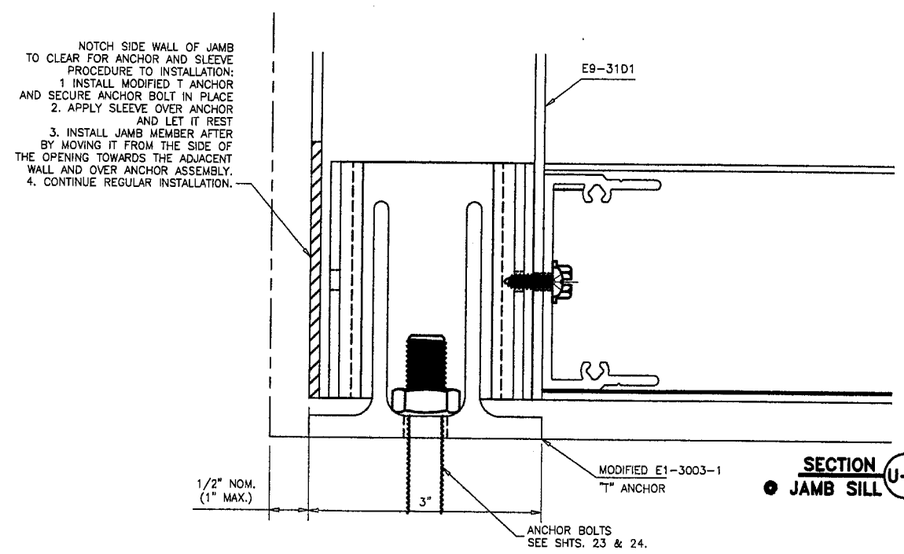

SECTION U-U
JAMB SILL
NEW

NOTE: USE ALT. DETAILS SHOWN ON T-T AND U-U FOR HIGH LOAD ONLY.

PRODUCT REVISED
as complying with the Florida Building Code
Acceptance No. 06-0306.01
Expiration Date 03/04/11
By [signature]
Miami Dade Product Control Division

RESERVED FOR METRO-DADE USE ONLY

YKK AP AMERICA, INC.
5630 GWALTNEY DRIVE
ATLANTA, GEORGIA 30336

SYSTEM	SCALE
YHC 300 INSULATED GLAZING SYS.	1/2

DESCRIPTION: STOREFRONT/DOOR SILL ANCHOR DETAILS

DRAWING NUMBER	REV.
YHC-300-OG-IL	A

APPROVED BY	DRAWN BY	DATE	SHEET NO.
JIA	RTB	8/5/02	20 OF 30

G:\SYSDWGS\YHC3000G\DADE\INSULATED\LARGEMISSILE\YHC300p20IL.DWG

MATERIAL LIST

	DESCRIPTION	SHAPE #	MATERIAL	BASIC DIMENSIONS	REMARK	REV
	VERT. MULL.	E9-3101	6063-T6	3" x 6 11/16"		
	HORIZONTAL	E9-3102	6063-T6	3" x 6 11/16"		
	OPEN SIDE HORIZ.	E9-3104	6063-T6	3" x 6 11/16"	FOR SILL & HEAD	
	TYP. PRESS. PLATE	AS-3138	6063-T6	2 1/2" x 5/8"	FOR VERT. & HORIZ. MULLION	
	PERIM. PRESS. PL.	AS-3143	6063-T6	2 3/4" x 2"	FOR JAMB, HEAD & SILL	
	SPANDREL ADAPTER	E9-3141	6063-T6	1 1/8" x 7/8"	ADAPTER FOR 1/4" GLAZING	
	SNAP COVER	E9-3161	6063-T6	3" x 11/16"	FOR VERT. & HORIZ. MULLION	
	2 PIECE FLUSH FILLER	E9-3162	6063-T6	4 7/8" x 5/16"	FOR OPEN SIDE HORIZ.	
	ANGLE	E9-9303	6063-T6	1 1/2" x 1 1/2"	FOR 90° CORNER	
					E	

PART LIST

	SHEAR CLIP	E1-3001	6063-T6	4 1/2" LG.	HORIZ. TO VERT. CONNECTION	
	ANCHOR / SHEAR CLIP 45"	E1-3002	6063-T6	4 1/2" LG.	SILL TO VERT. CONNECTION	
	"T" ANCHOR	E1-3003	6063-T6	4" LG.	TOP ANCHOR	
	"F" ANCHOR	E1-3004	6063-T6	4" LG.	TOP JAMB ANCHOR	
	SPLICE SLEEVE	E1-3005	6063-T6	6" LG.	FOR MULTI-SPAN APPLICATION	
	ANCHOR SLEEVE	E1-3006	6063-T6	3" LG.	USE WITH 'T' & 'F' ANCHORS	
	REINF. SLEEVE	E1-3007	6063-T6	29" LG.	AT MID-SPAN ANCHOR IN TWIN SPAN	
	SPLICE SLEEVE	E1-3009	FORMED ALUM.	2" LG.	FOR COVER	
	END PLATE	E1-3010	ALUM. SHT.		FOR VERTICAL MULLION 1" GL.	
	MODIFIED "T" ANCHOR	E1-3003-1	6063-T6	4" LG.	TOP & BOTTOM JAMB ANCHOR	
	STEEL REINFORCEMENT	E1-0175	STEEL A36	2 1/2" x 4 1/2" x 3/16"	FOR INTERMEDIATE VERT.	

DEPTH

SYSTEM **YHC 300**

DESCRIPTION **HURRICANE CURTAINWALL**

FINISH PAINTED OR ANODIZED

HARDWARE N/A

GLAZING SEE ELEVATION SHEET

BILL OF MATERIALS

FOR INSULATED GLAZING

PART LIST

	DESCRIPTION	PART #	MATERIAL	BASIC DIMENSIONS	COLOR	REMARK	REV
	EXT. GASKET 3/16" F.C.	E2-0351	EPDM		BLACK	EXTERIOR FOR 1 5/16" GL.	
	EXT. GASKET 516" F.C.	E2-0352	EPDM		BLACK	EXTERIOR FOR 1 3/16" GL.	
	EXT. GASKET 7/16" F.C.	E2-0360	EPDM		BLACK	EXTERIOR FOR 1 1/16" GL.	
	SPACER GASKET	E2-0353	EPDM S.C.		BLACK	INTERIOR	
	BULB GASKET	E2-0354	PVC or EPDM		BLACK	FOR SPANDREL ADAPTER	
	END DAM BLOCK	E2-0355	E.V.A. SPONGE		GREY	AT EVERY HORIZ. END	
	ISOLATOR TAPE	E2-0356	PVC SPONGE	11/16" x 1/8"	BLACK	FOR PERIMETER PRESS. PLATE	
	SETTING BLOCK	E2-0375	EPDM	1 5/16" x 7/16" x 4" LG.	BLACK	FOR INSULATED GL. (2/LITE)	
	SETTING BLOCK	E2-0357	EPDM	7/16" x 7/16" x 4" LG.	BLACK	FOR SINGLE GLASS SPANDREL (2/LITE)	
	SLIP PAD	E3-0103	NYLON	3 3/4" x 5" x 1/16"	WHITE	FOR STEEL ANCHORS	
	FH SMS (F)	FF-0808	ST. ZINC PLATED	#8 x 1/2"		TO LOCATE E1-3007	
	FH SMS (AB)	FC-1016	ST. ZINC PLATED	#10 x 1"		FOR E9-3141 ADAPTOR	
	FH SMS (AB)	FC-1212	ST. ZINC PLATED	#12 x 3/4"		FOR SPLICE SLEEVE	
	FH SMS (AB)	FC-1220	ST. ZINC PLATED	#12 x 1 1/4"		FOR HORIZONTAL/SHEAR CLIP	
	FH SMS (AB)	FC-1410	ST. ZINC PLATED	#14 x 5/8"		FOR MULLION END CAP	
	PH SMS (AB)	PC-1010	ST. ZINC PLATED	#10 x 5/8"		FOR ANCHOR SLEEVE	
	HWH TCS (F)	HF2510-W1	ST. ZINC PLATED	1/4" - 20 x 5/8"		FOR SHEAR CLIP	
	HWH TCS (F)	HF2516-W1	ST. ZINC PLATED	1/4" - 20 x 1"		FOR SHEAR CLIP & STEEL REINF.	
	HH MS	HM-2516-W3	ST. ZINC PLATED	1/4" - 20 x 1"		FOR PRESSURE PLATE	
	BOLT	HM-3864	ST. ZINC PLATED	1/2"-13 x 4"		FOR "J" ANCHOR MULLION	
	BOLT	HM-3816	STEEL GR.5	1/2"-13 x 4"		FOR "J" ANCHOR JAMB	
	NUT 1/2"	HM-3800	STEEL GR.5	1/2"-13		FOR "J" ANCHOR MULL. & JAMB	
	WASHER 1/2"	WW-3800	ST. ZINC PLATED	1/2"		FOR "J" ANCHOR MULL. & JAMB	
	LOCK-WASHER 1/2"	WS-3800	ST. ZINC PLATED	1/2"		FOR "J" ANCHOR MULL. & JAMB	
	NUT - 1/2"	HM-5000	ST. ZINC PLATED	1/2" - 13		FOR INTERMEDIATE ANCHORS	
	WASHER - 1/2"	WN-5000	ST. ZINC PLATED	1/2"		FOR INTERMEDIATE ANCHORS	
	LOCKWASHER - 1/2"	WS-5000	ST. ZINC PLATED	1/2"		FOR INTERMEDIATE ANCHORS	
	BOLT	HM-5072	STEEL GR.5	1/2" - 13 x 4 1/2"		FOR INTERMEDIATE ANCHORS	
	STEEL ANGLE	E1-1204	STEEL A36	4" x 4" x 1/4" x 5" LG.		WINDLOAD ANCHORS	
	STEEL ANGLE	E1-1205	STEEL A36	4" x 4" x 1/4" x 4" LG.		DEADLOAD ANCHORS	
	DOW 795		SILICONE			FOR PERIMETER CAULKING	
	DOW 995		SILICONE			FOR STRUCTURAL CAULKING	

NOTE :

PRODUCT REVISED
as complying with the Florida Building Code
Acceptance No. 06-0306.01
Expiration Date 03/04/11
By
Miami-Dade Product Control Division

[LP] LOOSE PART
[S] SELECTION PART
[OP] OPTION PART
Y: COLOR INDICATED

REV	DESCRIPTION	BY	DATE
A	TO MEET FBC 2004	JIA	2/28/2006

NO. YHC-300-OG-IL A

CKD BY	BY	DATE	SHEET NO.
JIA	RTB	8/5/2002	21 of 30

G:\SYSDWGS\YHC300OG\DADE\INSULATED\LARGEMISSILE\YHC300p21IL.XLS

TILLECO INC.
TILLIT TESTING & ENGINEERING COMPANY
6355 NW 36th STREET, STE. 305
MIAMI, FLORIDA 33166
FL E.B. LICENSE No. 0006719

APR 1 3 2006

WALTER A. TILLIT JR., P.E.
STRUCTURAL ENGINEER
FL. LIC.NO. 44167

REV.	DESCRIPTION	BY	DATE
A	MULLION DIMENSION "b"	C.V.	2/28/06

YHC 300 OG SINGLE SPAN

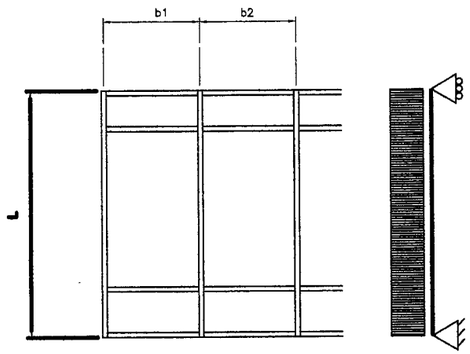

MULLION DIMENSION $b = \frac{b1 + b2}{2}$

YHC 300 OG TWIN SPAN

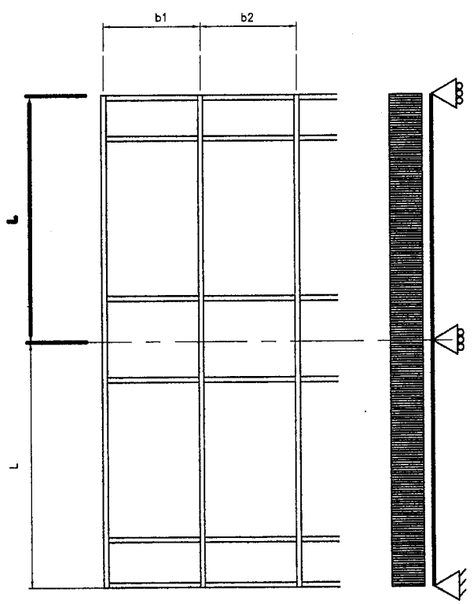

MULLION DIMENSION $b = \frac{b1 + b2}{2}$

MAXIMUM MULLION SPAN "L" (Ft) SCHEDULE FOR A GIVEN MULLION DIMENSION "b" (Ft) AND A GIVEN DESIGN WIND LOAD "W" (psf)

CASE 1 : SINGLE SPAN WITH UNREINFORCED MULLION. (SEE DET.4/SHT.4)

CASE 2 : SINGLE SPAN WITH REINFORCED MULLION FULL HEIGHT. (SEE DET.5/SHT.4) (LENGTH OF E1-0175=L-6 1/2")

CASE 3 : TWIN SPANS WITH REINFORCED MULLION AT INTERMEDIATE SUPPORT ONLY. (SEE DET'S 54 & 54A/SHT.18 + SECT. QQ/SHT.19) (LENGTH OF E1-3007=29").

MAXIMUM DESIGN LOAD "W"	MULLION DIMENSION "b"	CASE 1 "L"	CASE 2 "L"	CASE 3 "L"
±60.0	3'-0"	11'-6"	14'-0"	14'-0"
	3'-6"	11'-6"	14'-0"	14'-0"
	4'-0"	11'-6"	14'-0"	14'-0"
	4'-6"	10'-11"	14'-0"	14'-0"
	5'-0"	10'-5"	14'-0"	14'-0"
	5'-6"	9'-11"	13'-7"	13'-7"
	6'-0"	9'-6"	13'-3"	13'-3"
±65.0	3'-0"	11'-6"	14'-0"	14'-0"
	3'-6"	11'-6"	14'-0"	14'-0"
	4'-0"	11'-2"	14'-0"	14'-0"
	4'-6"	10'-6"	14'-0"	14'-0"
	5'-0"	10'-0"	13'-8"	13'-8"
	5'-6"	9'-6"	13'-3"	13'-3"
	6'-0"	9'-1"	12'-10"	12'-10"
±70.0	3'-0"	11'-6"	14'-0"	14'-0"
	3'-6"	11'-6"	14'-0"	14'-0"
	4'-0"	10'-9"	14'-0"	14'-0"
	4'-6"	10'-2"	13'-10"	13'-10"
	5'-0"	9'-7"	13'-4"	13'-4"
	5'-6"	9'-2"	12'-11"	12'-11"
	6'-0"	8'-9"	12'-7"	12'-7"
±75.0	3'-0"	11'-6"	14'-0"	14'-0"
	3'-6"	11'-1"	14'-0"	14'-0"
	4'-0"	10'-4"	14'-0"	14'-0"
	4'-6"	9'-9"	13'-6"	13'-6"
	5'-0"	9'-3"	13'-0"	13'-0"
	5'-6"	8'-10"	12'-7"	12'-7"
	6'-0"	8'-6"	12'-3"	12'-3"

MAXIMUM DESIGN LOAD "W"	MULLION DIMENSION "b"	CASE 1 "L"	CASE 2 "L"	CASE 3 "L"
±80.0	3'-0"	11'-6"	14'-0"	14'-0"
	3'-6"	10'-9"	14'-0"	14'-0"
	4'-0"	10'-0"	13'-9"	13'-9"
	4'-6"	9'-6"	13'-3"	13'-3"
	5'-0"	9'-0"	12'-9"	12'-9"
	5'-6"	8'-7"	12'-4"	12'-4"
	6'-0"	7'-11"	11'-8"	11'-8"
±85.0	3'-0"	11'-3"	14'-0"	14'-0"
	3'-6"	10'-5"	14'-0"	14'-0"
	4'-0"	9'-9"	13'-5"	13'-5"
	4'-6"	9'-2"	13'-0"	13'-0"
	5'-0"	8'-9"	12'-6"	12'-6"
	5'-6"	8'-2"	12'-0"	12'-0"
	6'-0"	7'-6"	11'-0"	11'-0"
±90.0	3'-0"	10'-11"	14'-0"	14'-0"
	3'-6"	10'-1"	13'-10"	13'-10"
	4'-0"	9'-6"	13'-3"	13'-3"
	4'-6"	8'-11"	12'-9"	12'-9"
	5'-0"	8'-6"	12'-6"	12'-6"
	5'-6"	7'-8"	11'-4"	11'-4"
	6'-0"	7'-0"	10'-4"	10'-4"

TILLECO INC.

TILLIT TESTING & ENGINEERING COMPANY
6355 NW 36th STREET, STE. 305
MIAMI, FLORIDA 33166
FL E.B. LICENSE No. 0006719

PRODUCT REVISED
as complying with the Florida Building Code
Acceptance No 06-0306.01
Expiration Date 03/09/11
By
Miami-Dade Product Control Division

WALTER A. TILLIT JR., P.E.
STRUCTURAL ENGINEER
FL. LIC.NO. 44167

APR 12 2006

RESERVED FOR METRO-DADE USE ONLY

YKK ap America

YKK AP AMERICA, INC.
5630 GWALTNEY DRIVE
ATLANTA, GEORGIA 30336

SYSTEM	SCALE
YHC 300 INSULATED GLAZING SYS.	NONE

DESCRIPTION: MULLION CHART

DRAWING NUMBER	REV.
YHC-300-OG-IL	A

APPROVED BY	DRAWN BY	DATE	SHEET NO.
JIA	JIA	8/5/02	22 of 30

G:\SYSDWGS\YHC300OG\DADE\INSULATED\LARGEMISSILE\YHC300p22IL.DWG

REV.	DESCRIPTION	BY	DATE
A	CONDITIONS 1 TO 8 & NEW 1A/5A	C.V.	2/28/06
	+ ANCHOR BOLT SCHEDULE		
B	ANCHOR "F" MIN. E.D. & SPACING	L.G.	4/7/06

YHC 300 O/G SINGLE SPAN

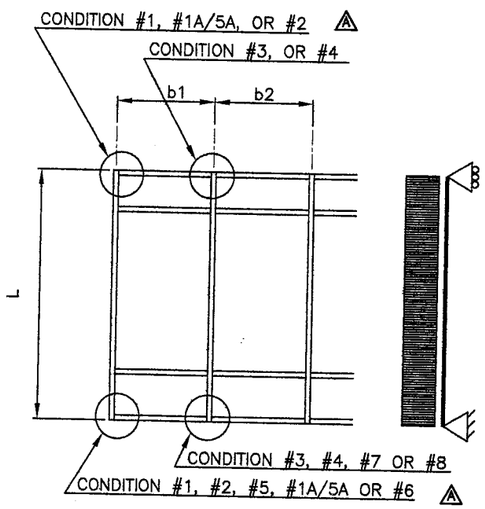

MULLION DIMENSION $b = \frac{b1 + b2}{2}$ A

ANCHOR BOLT SCHEDULE A

ALL ANCHOR BOLTS SHALL BE INSTALLED STRICTLY FOLLOWING THE ANCHOR MANUFACTURER'S SPECS AND RECOMMENDATIONS.

ANCHOR BOLT TYPE	DIAMETER & MODEL NAME	MANUFACTURER	Min. EDGE DISTANCE	Min. EMBEDMENT	Min. SPACING	SUBSTRATE
"A"	1/2"ø KWIK BOLT 3	HILTI, INC	3 3/8"	2 1/4"	3" O.C.	f'c=3ksi CONCRETE
"B"	1/2"ø HVA W/ SUPER HAS ROD	HILTI, INC	3"	4 1/4"	3" O.C.	f'c=3ksi CONCRETE
"A1"	1/2"ø KWIK BOLT 3	HILTI, INC	3 3/8"	2 1/4"	3 3/8"	f'c=3ksi CONCRETE
"B1"	1/2"ø HVA W/ SUPER HAS ROD	HILTI, INC	3"	4 1/4"	3 3/8"	f'c=3ksi CONCRETE
"C"	5/8"ø POWER BOLT	POWERS FASTENERS,INC	5"	4"	7 1/2" O.C.	f'c=3ksi CONCRETE
"D"	1/2"ø HVA W/ SUPER HAS ROD	HILTI, INC	5"	4 1/4"	7 1/2" O.C.	f'c=3ksi CONCRETE
"E"	1/2"ø POWER BOLT	POWERS FASTENERS,INC	3 1/2"	4"	7 1/2" O.C.	f'c=3ksi CONCRETE
"F"	1/2"ø BOLT W/ NUT & WASHERS	GRADE 5 STEEL *	A 1"	N/A	A 3" O.C.	1/4" Min. STEEL

* SHALL COMPLY W/ DIN 50018.

CONDITION #8 A

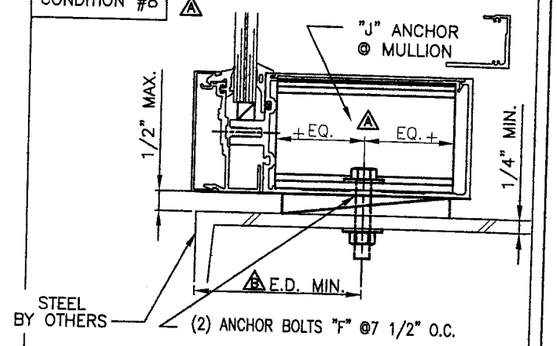

CONDITION #7 A

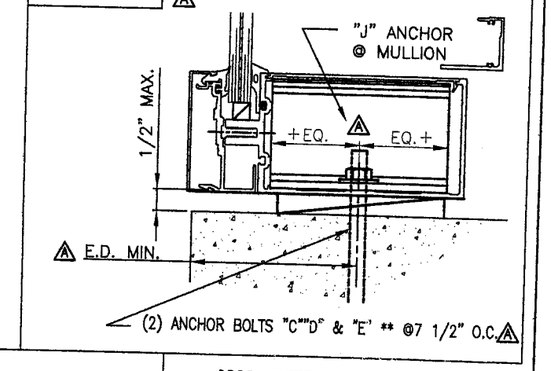

TILLECO INC.

TILLIT TESTING & ENGINEERING COMPANY
6355 NW 36th STREET, STE. 305
MIAMI, FLORIDA 33166
FL E.B. LICENSE No. 0006719

CONDITION #1 A

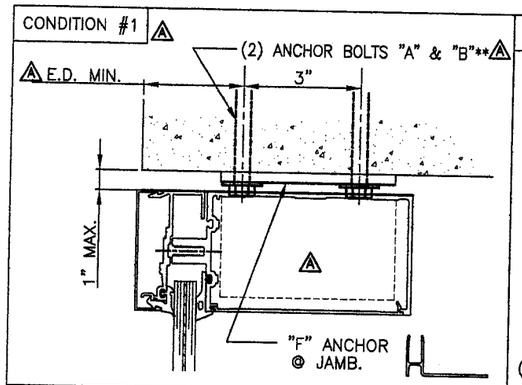

CONDITION #1A/5A A

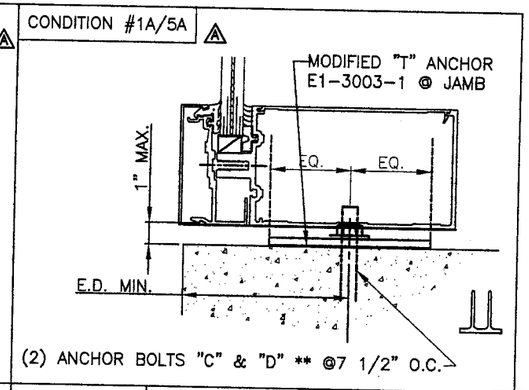

CONDITION #6 A

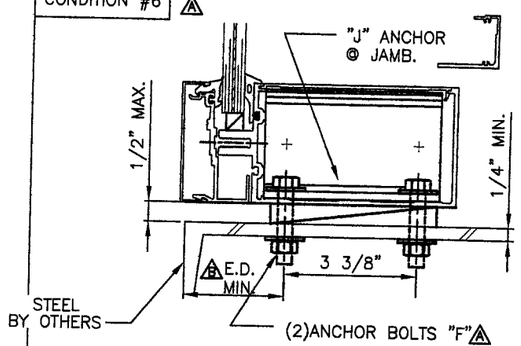

CONDITION #2 A

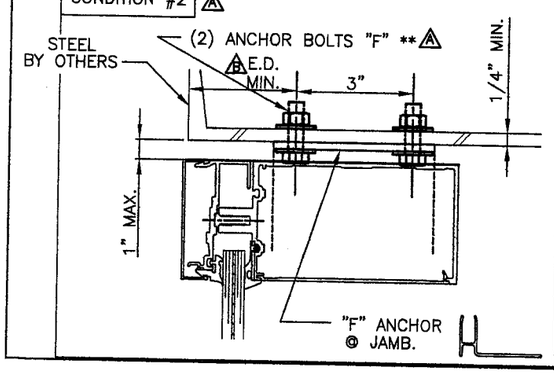

CONDITION #3 A

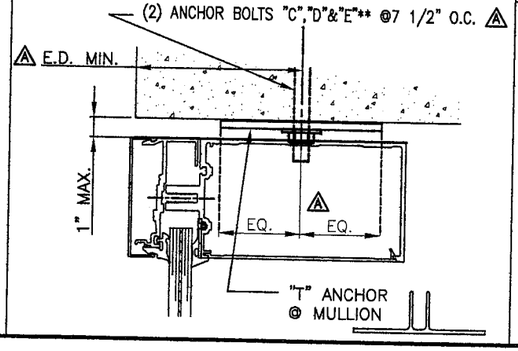

CONDITION #4 A

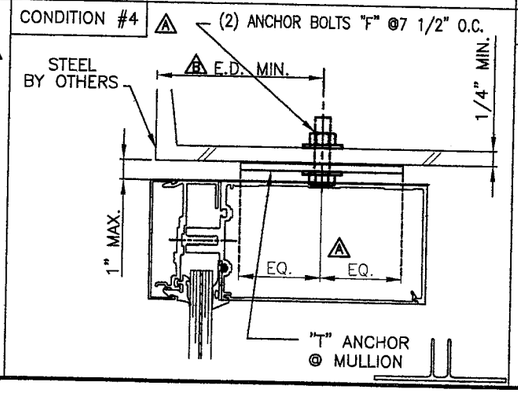

CONDITION #5 A

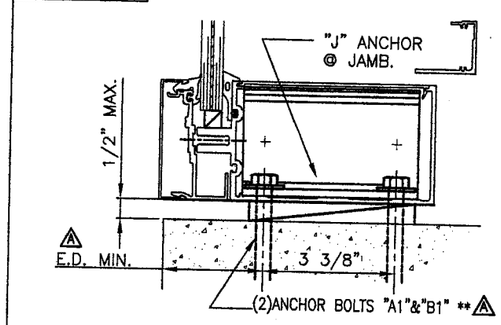

WALTER A. TILLIT JR., P.E.
STRUCTURAL ENGINEER
FL. LIC.NO. 44167

APR 1 3 2006

PRODUCT REVISED
as complying with the Florida Building Code
Acceptance No. 00-0306.01
Expiration Date 08/04/01
By
Miami-Dade Product Control Division

RESERVED FOR METRO-DADE USE ONLY

YKK ap America
YKK AP AMERICA, INC.
5630 GWALTNEY DRIVE
ATLANTA, GEORGIA 30336

SYSTEM: YHC 300 INSULATED GLAZING	SCALE: 1/2
DESCRIPTION: ANCHOR BOLT GUIDE -SINGLE SPAN-	
DRAWING NUMBER: YHC-300-OG-IL	REV.: A
APPROVED BY: JIA / DRAWN BY: JIA / DATE: 8/05/02	SHEET NO.: 23 OF 30

G:\SYSDWGS\YHC3000G\DADE\INSULATED\LARGEMISSILE\YHC300P23IL.DWG

REV.	DESCRIPTION	BY	DATE

ANCHOR BOLT'S PRESSURE RATING : SINGLE SPAN

MULLION SPAN "L"	MULLION DIMENS. "b"	DESIGN LOAD OF ANCHOR BOLTS (psf) POSITIVE OR NEGATIVE											
		CONDITION # 1		CONDITION # 3			CONDITION # 5		CONDITION # 7			CONDITION # 1A/5A	
		OPTIONAL ANCHOR BOLTS TYPE											
		A	B	C	D	E	A1	B1	C	D	E	C	D
8'-6"	4'-6"	90	90	90	90	90	90	90	90	90	90	90	90
	4'-9"	90	88.7	90	90	90	90	90	90	90	90	90	90
	5'-0"	87.0	84.2	90	90	90	89.4	90	90	90	90	90	90
	5'-3"	82.8	80.2	90	90	90	85.2	87.1	90	90	88.5	90	90
	5'-6"	79.1	76.6	90	90	89.3	81.3	83.2	90	90	89.4	90	90
	5'-9"	75.6	73.2	90	90	85.4	77.7	79.5	90	90	81.8	90	90
	6'-0"	72.5	70.2	90	90	81.9	74.5	78.2	90	90	77.4	90	90
9'-0"	4'-3"	90	90	90	90	90	90	90	90	90	90	90	90
	4'-6"	90	88.4	90	90	90	90	90	90	90	90	90	90
	4'-9"	86.5	83.7	90	90	90	88.9	90	90	90	90	90	90
	5'-0"	82.1	79.6	90	90	90	84.4	86.4	90	90	87.7	90	90
	5'-3"	78.2	75.8	90	90	88.4	80.4	82.3	90	90	83.6	90	90
	5'-6"	74.7	72.3	90	90	84.4	76.8	78.5	90	90	79.8	90	90
	5'-9"	71.4	69.2	90	90	80.7	73.4	75.1	90	90	76.3	90	90
	6'-0"	68.4	66.3	90	90	77.3	70.4	72.0	87.9	90	73.1	89.1	90
9'-6"	4'-0"	90	90	90	90	90	90	90	90	90	90	90	90
	4'-3"	90	88.7	90	90	90	90	90	90	90	90	90	90
	4'-6"	86.5	83.7	90	90	90	88.9	90	90	90	90	90	90
	4'-9"	81.9	79.3	90	90	90	84.2	86.2	90	90	87.5	90	90
	5'-0"	77.8	75.4	90	90	87.9	80.0	81.9	90	90	83.1	90	90
	5'-3"	74.1	71.8	90	90	83.7	76.2	78.0	90	90	79.2	90	90
	5'-6"	70.7	68.5	90	90	79.9	72.7	74.4	90	90	75.6	90	90
	5'-9"	67.7	65.5	90	90	76.4	69.6	71.2	86.8	90	72.3	90	90
	6'-0"	64.8	62.8	89	90	73.3	66.7	68.2	86.3	90	69.3	90	90
10'-0"	3'-9"	90	90	90	90	90	90	90	90	90	90	90	90
	4'-0"	90	89.5	90	90	90	90	90	90	90	90	90	90
	4'-3"	87.0	84.2	90	90	90	89.4	90	90	90	90	90	90
	4'-6"	82.1	79.6	90	90	90	84.4	86.4	90	90	87.7	90	90
	4'-9"	77.8	75.4	90	90	87.9	80.0	81.9	90	90	83.1	90	90
	5'-0"	73.9	71.6	90	90	83.5	76.0	77.8	90	90	79.0	90	90
	5'-3"	70.4	68.2	90	90	79.5	72.4	74.1	90	90	75.2	90	90
	5'-6"	67.2	65.1	90	90	75.9	69.1	70.7	86.3	90	71.8	90	90
	5'-9"	64.3	62.3	88.2	90	72.6	66.1	67.6	82.5	90	68.7	88.3	90
	6'-0"	61.6	59.7	84.6	90	69.6	63.3	64.8	79.1	90	65.8	84.6	90

MULLION SPAN "L"	MULLION DIMENS. "b"	DESIGN LOAD OF ANCHOR BOLTS (psf) POSITIVE OR NEGATIVE											
		CONDITION # 1		CONDITION # 3			CONDITION # 5		CONDITION # 7			CONDITION # 1A/5A	
		OPTIONAL ANCHOR BOLTS TYPE											
		A	B	C	D	E	A1	B1	C	D	E	C	D
10'-6"	3'-9"	90	90	90	90	90	90	90	90	90	90	90	90
	4'-0"	88.0	85.2	90	90	90	90	90	90	90	90	90	90
	4'-3"	82.8	80.2	90	90	90	85.2	87.1	90	90	88.5	90	90
	4'-6"	78.2	75.8	90	90	88.4	80.4	82.3	90	90	83.6	90	90
	4'-9"	74.1	71.8	90	90	83.7	76.2	78.0	90	90	79.2	90	90
	5'-0"	70.4	68.2	90	90	79.5	72.4.	74.1	90	90	75.2	90	90
	5'-3"	67.0	64.9	90	90	75.8	68.9	70.5	86.1	90	71.6	90	90
	5'-6"	64.0	62.0	87.9	90	72.3	65.8	67.3	82.1	90	68.4	87.9	90
	5'-9"	61.2	59.3	84.0	90	69.2	62.9	64.4	78.6	90	65.4	84.2	90
	6'-0"	58.7	56.8	80.5	90	66.3	60.3	61.7	75.3	90	62.7	80.6	90
11'-0"	3'-9"	89.6	86.8	90	90	90	90	90	90	90	90	90	90
	4'-0"	84.0	81.4	90	90	90	86.4	88.4	90	90	89.7	90	90
	4'-3"	79.1	76.6	90	90	89.3	81.3	83.2	90	90	84.4	90	90
	4'-6"	74.7	72.3	90	90	84.4	76.8	78.5	90	90	79.8	90	90
	4'-9"	70.7	68.5	90	90	79.9	72.7	74.4	90	90	75.6	90	90
	5'-0"	67.2	65.1	90	90	75.9	69.1	70.7	86.3	90	71.8	90	90
	5'-3"	64.0	62.0	87.9	90	72.3	85.8	67.3	82.1	90	68.4	87.9	90
	5'-6"	61.1	59.2	83.9	90	69.0	52.8	64.3	78.4	90	65.3	83.9	90
	5'-9"	58.4	56.6	80.2	90	66.0	60.1	61.5	75.0	90	62.4	80.3	90
	6'-0"	56.0	54.2	76.9	90	63.3	57.6	58.9	71.9	90	59.8	76.9	90
11'-6"	3'-9"	85.7	83.0	90	90	90	88.1	90	90	90	90	90	90
	4'-0"	80.3	77.8	90	90	90	82.6	84.5	90	90	85.8	90	90
	4'-3"	75.6	73.2	90	90	85.4	77.7	79.5	90	90	80.8	90	90
	4'-6"	71.4	69.2	90	90	80.7	73.4	75.1	90	90	76.3	90	90
	4'-9"	67.7	65.5	90	90	76.4	69.6	71.2	86.8	90	72.3	90	90
	5'-0"	64.3	62.3	88.2	90	72.6	66.1	67.6	82.5	90	68.7	88.3	90
	5'-3"	61.2	59.3	84.0	90	69.2	62.9	64.4	78.6	90	65.4	84.1	90
	5'-6"	58.4	56.6	80.2	90	66.0	60.1	61.5	75.0	90	62.4	80.3	90
	5'-9"	55.9	54.1	76.7	90	63.2	57.5	58.8	71.7	90	59.7	76.8	90
	6'-0"	53.6	51.9	73.5	90	65.5	55.1	56.3	68.8	90	57.2	73.6	90

NOTE: MULLION SPAN "L" FOR A GIVEN MULLION DIMENSION "b" SHALL NOT EXCEED MAXIMUN VALUES INDICATED ON SCHEDULE ON SHEET 22.

APR 12 2005

TILLECO INC.

TILLIT TESTING & ENGINEERING COMPANY
6355 NW 36th STREET, STE. 305
MIAMI, FLORIDA 33166
FL E.B. LICENSE No. 0006719

WALTER A. TILLIT JR., P.E.
STRUCTURAL ENGINEER
FL. LIC.NO. 44167

PRODUCT REVISED
as complying with the Florida Building Code
Acceptance No. 02-0306.01
Expiration Date 03/04/11
By
Miami-Dade Product Control Division

RESERVED FOR METRO-DADE USE ONLY

YKK ap America

YKK AP AMERICA, INC.
5630 GWALTNEY DRIVE
ATLANTA, GEORGIA 30336

SYSTEM	SCALE
YHC 300 INSULATED GLAZING	1/2

DESCRIPTION: ANCHOR BOLT GUIDE -SINGLE SPAN-

DRAWING NUMBER	REV.
YHC-300-OG-IL	

APPROVED BY	DRAWN BY	DATE	SHEET NO.
JIA	JIA	8/05/02	23A OF 30

G:\SYSDWGS\YHC3000G\DADE\INSULATED\LARGEMISSILE\YHC300P23AIL.DWG

REV.	DESCRIPTION	BY	DATE

ANCHOR BOLT'S PRESSURE RATING : SINGLE SPAN (CONTINUED)

MULLION SPAN "L"	MULLION DIMENS. "b"	DESIGN LOAD OF ANCHOR BOLTS (psf) POSITIVE OR NEGATIVE											
		CONDITION # 1		CONDITION # 3			CONDITION # 5		CONDITION # 7			CONDITION # 1A/5A	
		OPTIONAL ANCHOR BOLTS TYPE											
		A	B	C	D	E	A1	B1	C	D	E	C	D
12'-0"	4'-0"	77.0	74.6	90	90	87	72.2	81.0	90	90	82.3	90	90
	4'-3"	72.5	70.2	90	90	81.9	74.5	76.2	90	90	77.4	90	90
	4'-6"	68.4	66.3	90	90	77.3	70.4	72.0	87.9	90	73.1	90	90
	4'-9"	64.8	62.8	89.0	90	73.3	66.7	68.2	83.2	90	69.3	89.1	90
	5'-0"	61.6	59.7	84.6	90	69.6	63.3	64.8	79.1	90	65.8	84.6	90
	5'-3"	58.7	56.8	80.5	90	66.3	60.3	61.7	75.3	90	62.7	80.6	90
	5'-6"	56.0	54.2	76.9	90	63.3	57.6	58.9	71.9	90	59.8	76.9	90
	5'-9"	53.6	51.9	73.5	90	60.5	55.1	56.3	68.8	90	57.2	73.6	90
	6'-0"	51.3	49.7	70.5	90	58	52.8	54.0	65.9	90	54.8	70.5	90
12'-6"	4'-0"	73.9	71.6	90	90	83.5	70.6	77.8	90	90	79.0	90	90
	4'-3"	69.6	67.4	90	90	78.6	71.5	73.2	89.3	90	74.3	90	90
	4'-6"	65.7	63.6	90	90	74.2	67.6	69.1	84.3	90	70.2	90	90
	4'-9"	62.2	60.3	85.5	90	70.3	64.0	65.5	79.4	90	66.5	85.5	90
	5'-0"	59.1	57.3	81.2	90	66.8	60.8	62.2	75.9	90	63.2	81.2	90
	5'-3"	56.3	54.6	77.3	90	63.6	57.9	59.2	72.3	90	60.2	77.3	90
	5'-6"	53.8	52.1	73.8	90	60.7	55.3	56.6	69.0	90	57.4	73.8	90
	5'-9"	51.4	49.8	70.6	90	58.1	52.9	54.1	66.0	90	54.9	70.6	90
	6'-0"	49.3	47.7	67.7	90	55.7	50.7	51.8	63.3	87.4	52.6	67.7	90
13'-0"	4'-0"	71.1	68.8	90	90	80.3	73.1	79.8	91.2	90	75.9	90	90
	4'-3"	66.9	64.8	90	90	75.6	68.8	70.4	85.9	90	71.5	90	90
	4'-6"	63.2	61.2	86.7	90	71.4	65.0	66.5	81.1	90	67.5	86.8	90
	4'-9"	59.4	58.0	82.2	90	67.6	61.5	63.0	76.8	90	63.9	82.2	90
	5'-0"	56.9	55.1	78.1	90	64.2	58.5	59.8	73.0	90	60.7	78.1	90
	5'-3"	54.2	52.5	74.3	90	61.2	55.7	57.0	69.5	90	52.8	74.4	90
	5'-6"	51.7	50.1	71.0	90	58.4	53.1	54.4	66.3	90	55.2	71.0	90
	5'-9"	49.4	47.9	67.9	90	55.9	50.8	52.0	63.5	87.7	52.8	67.9	90
	6'-0"	47.4	45.9	65.1	88.4	53.5	48.7	49.8	60.8	84.0	50.6	65.1	88.5

MULLION SPAN "L"	MULLION DIMENS. "b"	DESIGN LOAD OF ANCHOR BOLTS (psf) POSITIVE OR NEGATIVE											
		CONDITION # 1		CONDITION # 3			CONDITION # 5		CONDITION # 7			CONDITION # 1A/5A	
		OPTIONAL ANCHOR BOLTS TYPE											
		A	B	C	D	E	A1	B1	C	D	E	C	D
13'-6"	4'-0"	68.4	66.3	90	90	77.3	70.4	72.0	87.9	90	73.1	90	90
	4'-3"	64.4	62.4	88.4	90	72.8	66.2	67.8	82.7	90	68.8	88.5	90
	4'-6"	60.8	58.4	83.5	90	68.7	62.6	64.0	78.1	90	65.0	83.6	90
	4'-9"	57.6	55.8	79.1	90	65.1	59.3	60.6	74.0	90	61.6	79.2	90
	5'-0"	54.8	53.0	75.2	90	61.9	56.3	57.6	70.3	90	58.5	75.2	90
	5'-3"	52.1	50.5	71.6	90	58.4	53.6	54.9	66.9	90	55.7	71.6	90
	5'-6"	49.8	48.2	68.3	90	56.2	51.2	52.4	63.9	88.2	53.2	68.4	90
	5'-9"	47.6	46.1	65.4	88.9	53.8	49.0	50.1	61.1	84.4	50.9	65.4	88.9
	6'-0"	45.6	44.2	62.6	85.2	51.6	46.9	48.0	58.6	80.9	48.7	62.7	85.2
14'-0"	4'-0"	66.0	63.9	90	90	74.6	67.9	69.4	84.7	90	70.5	90	90
	4'-3"	62.1	60.2	85.3	90	70.2	63.9	65.3	79.7	90	66.4	85.3	90
	4'-6"	58.7	56.8	80.5	90	66.3	60.3	61.7	75.3	90	62.7	80.6	90

NOTE: MULLION SPAN "L" FOR A GIVEN MULLION DIMENSION "b" SHALL NOT EXCEED MAXIMUN VALUES INDICATED ON SCHEDULE ON SHEET 22.

WALTER A. TILLIT JR., P.E.
STRUCTURAL ENGINEER
FL. LIC.NO. 44167

APR 1 2 2006

TILLECO INC.

TILLIT TESTING & ENGINEERING COMPANY
6355 NW 36th STREET, STE. 305
MIAMI, FLORIDA 33166
FL E.B. LICENSE No. 0006719

PRODUCT REVISED
as complying with the Florida Building Code
Acceptance No. 06-0306.01
Expiration Date 03/04/11
By
Miami Dade Product Control Division

RESERVED FOR METRO-DADE USE ONLY

YKK AP America

YKK AP AMERICA, INC.
5630 GWALTNEY DRIVE
ATLANTA, GEORGIA 30336

SYSTEM	SCALE
YHC 300 INSULATED GLAZING	1/2

DESCRIPTION: ANCHOR BOLT GUIDE -SINGLE SPAN-

DRAWING NUMBER	REV.
YHC-300-OG-IL	

APPROVED BY	DRAWN BY	DATE	SHEET NO.
JIA	JIA	8/05/02	23B OF 30

G:\SYSDWGS\YHC300OG\DADE\INSULATED\LARGEMISSILE\YHC300P23BIL.DWG

REV.	DESCRIPTION	BY	DATE
A	CONDITIONS 1 TO 8 & NEW 1A/5A	C.V.	2/28/06
	+ ANCHOR BOLT SCHEDULE		
B	ANCHOR "F" MIN. E.D. & SPACING	L.G.	4/7/06

YHC 300 O/G TWIN SPAN

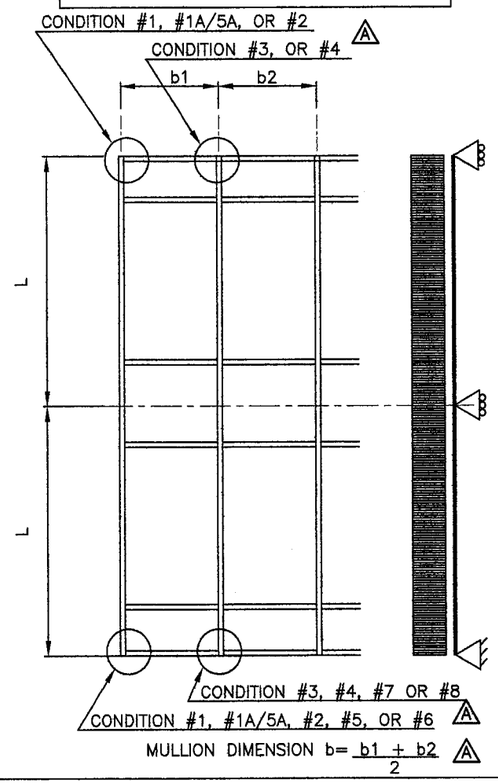

ANCHOR BOLT SCHEDULE A

ALL ANCHOR BOLTS SHALL BE INSTALLED STRICTLY FOLLOWING THE ANCHOR MANUFACTURER'S SPECS AND RECOMMENDATIONS.

ANCHOR BOLT TYPE	DIAMETER & MODEL NAME	MANUFACTURER	Min. EDGE DISTANCE	Min. EMBEDMENT	Min. SPACING	SUBSTRATE
"A"	1/2"ø KWIK BOLT 3	HILTI, INC	3 3/8"	2 1/4"	3" O.C.	f'c=3ksi CONCRETE
"B"	1/2"ø HVA W/ SUPER HAS ROD	HILTI, INC	3"	4 1/4"	3" O.C.	f'c=3ksi CONCRETE
"A1"	1/2"ø KWIK BOLT 3	HILTI, INC	3 3/8"	2 1/4"	3 3/8"	f'c=3ksi CONCRETE
"B1"	1/2"ø HVA W/ SUPER HAS ROD	HILTI, INC	3"	4 1/4"	3 3/8"	f'c=3ksi CONCRETE
"C"	5/8"ø POWER BOLT	POWERS FASTENERS,INC	5"	4"	7 1/2" O.C.	f'c=3ksi CONCRETE
"D"	1/2"ø HVA W/ SUPER HAS ROD	HILTI, INC	5"	4 1/4"	7 1/2" O.C.	f'c=3ksi CONCRETE
"E"	1/2"ø POWER BOLT	POWERS FASTENERS,INC	3 1/2"	4"	7 1/2" O.C.	f'c=3ksi CONCRETE
"F"	1/2"ø BOLT W/ NUT & WASHERS	GRADE 5 STEEL *	B 1"	N/A	B 3" O.C.	1/4" Min. STEEL

* SHALL COMPLY W/ DIN 50018.

TILTECO INC.

TILLIT TESTING & ENGINEERING COMPANY
6355 NW 36th STREET, STE. 305
MIAMI, FLORIDA 33166
FL E.B. LICENSE No. 0006719

CONDITION #8 A

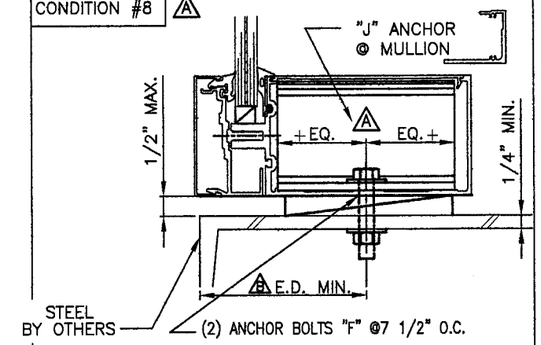

CONDITION #7 A

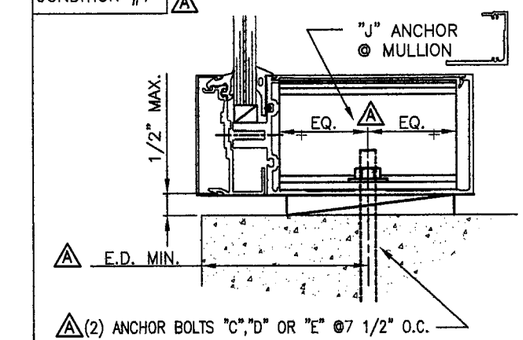

CONDITION #1 A

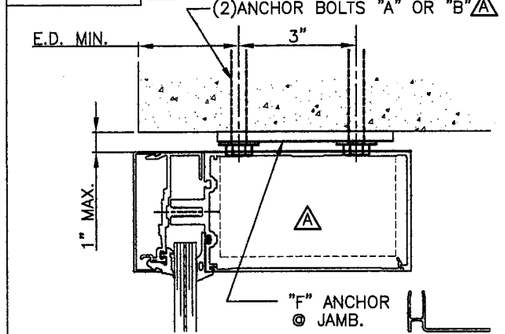

CONDITION #1A/5A A

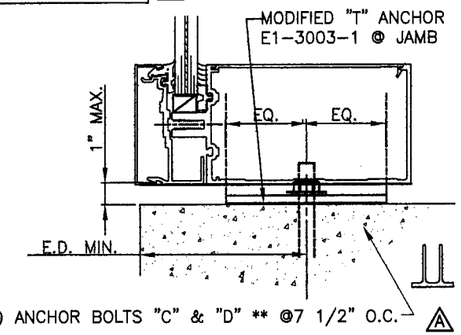

CONDITION #6 A

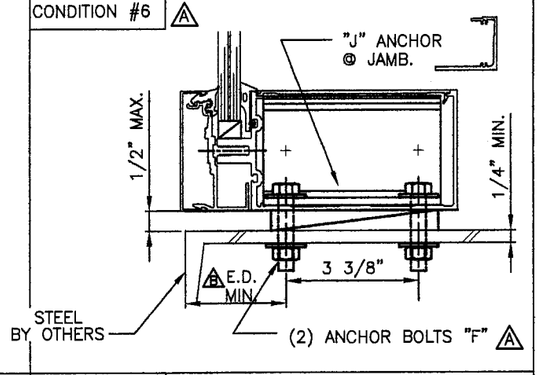

CONDITION #2 A

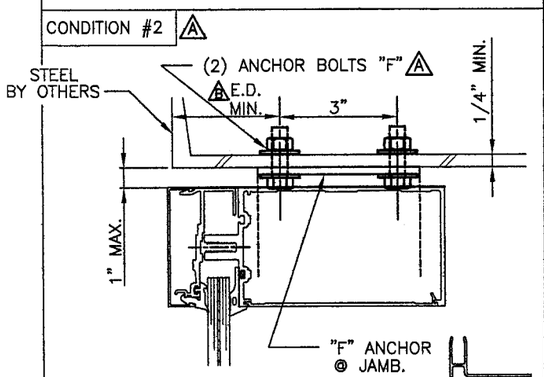

CONDITION #3 A

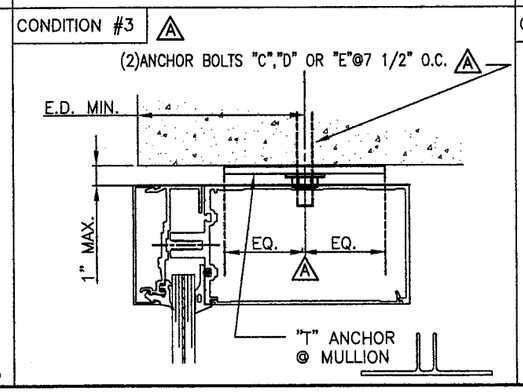

CONDITION #4 A

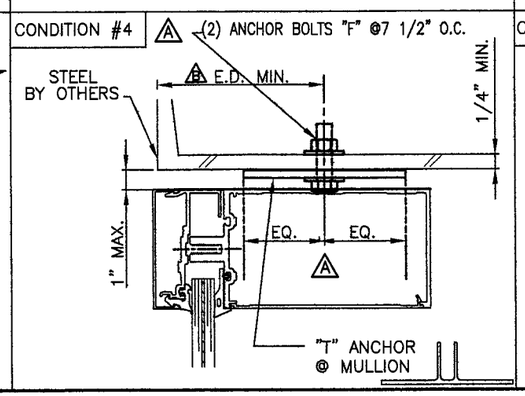

CONDITION #5 A

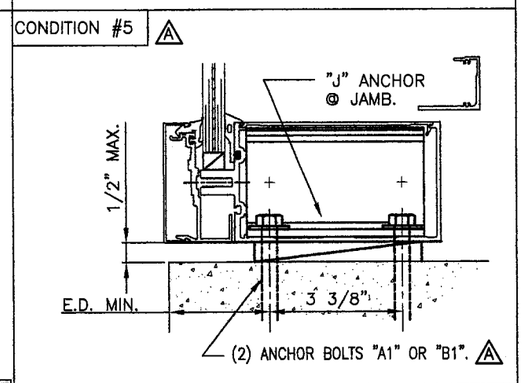

WALTER A. TILLIT JR., P.E.
STRUCTURAL ENGINEER
FL. LIC.NO. 44167

APR 1 9 2006

PRODUCT REVISED
as complying with the Florida Building Code
Acceptance No 06-0306.01
Expiration Date 03/04/11
By
Miami Dade Product Control Division

RESERVED FOR METRO-DADE USE ONLY

YKK ap America

YKK AP AMERICA, INC.
5630 GWALTNEY DRIVE
ATLANTA, GEORGIA 30336

SYSTEM: YHC 300 INSULATED GLAZING	SCALE: 1/2
DESCRIPTION: ANCHOR BOLT GUIDE -SINGLE SPAN-	
DRAWING NUMBER: YHC-300-OG-IL	REV.: A
APPROVED BY: JIA / DRAWN BY: JIA / DATE: 8/05/02	SHEET NO.: 24 OF 30

G:\SYSDWGS\YHC300OG\DADE\INSULATED\LARGEMISSILE\YHC300P24IL.DWG

REV.	DESCRIPTION	BY	DATE

ANCHOR BOLT'S PRESSURE RATING : TWIN SPAN

MULLION SPAN "L"	MULLION DIMENS. "b"	DESIGN LOAD OF ANCHOR BOLTS (psf) POSITIVE OR NEGATIVE											
		CONDITION # 1		CONDITION # 3			CONDITION # 5		CONDITION # 7			CONDITION # 1A, 5A	
		OPTIONAL ANCHOR BOLTS TYPE											
		A	B	C	D	E	A1	B1	C	D	E	C	D
8'-6"	6'-0"	90	90	90	90	90	90	90	90	90	90	90	90
9'-0"	5'-9"	90	90	90	90	90	90	90	90	90	90	90	90
	6'-0"	90	88.4	90	90	90	90	90	90	90	90	90	90
9'-6"	5'-6"	90	90	90	90	90	90	90	90	90	90	90	90
	5'-9"	90	87.4	90	90	90	90	90	90	90	90	90	90
	6'-0	86.5	83.7	90	90	90	89.1	89.1	90	90	90	90	90
10'-0"	5'-3"	90	90	90	90	90	90	90	90	90	90	90	90
	5'-6"	89.6	86.8	90	90	90	90	90	90	90	90	90	90
	5'-9"	85.7	83.0	90	90	90	88.1	90	90	90	90	90	90
	6'-0"	82.1	79.6	90	90	90	84.4	86.4	90	90	87.9	90	90
10'-6"	5'-0"	90	90	90	90	90	90	90	90	90	90	90	90
	5'-3"	89.4	86.6	90	90	90	90	90	90	90	90	90	90
	5'-6"	85.3	82.7	90	90	90	87.7	89.8	90	90	90	90	90
	5'-9"	81.6	79.1	90	90	90	83.9	85.9	90	90	87.2	90	90
	6'-0"	78.2	75.8	90	90	88.4	80.4	82.3	90	90	83.6	90	90
11'-0"	4'-9"	90	90	90	90	90	90	90	90	90	90	90	90
	5'-0"	89.6	86.8	90	90	90	90	90	90	90	90	90	90
	5'-3"	85.3	82.7	90	90	90	87.7	89.8	90	90	90	90	90
	5'-6"	81.5	78.9	90	90	90	83.7	85.7	90	90	87.0	90	90
	5'-9"	77.9	75.5	90	90	88	80.1	82.0	90	90	83.2	90	90
	6'-0"	74.7	72.3	90	90	84.4	76.8	78.5	90	90	74.8	90	90
11'-6"	4'-9"	90	87.4	90	90	90	90	90	90	90	90	90	90
	5'-0"	85.7	83.0	90	90	90	88.1	90	90	90	90	90	90
	5'-3"	81.6	79.1	90	90	90	83.9	85.9	90	90	87.2	90	90
	5'-6"	77.9	75.5	90	90	88.0	80.1	82.0	90	90	83.2	90	90
	5'-9"	74.5	72.2	90	90	84.2	76.6	78.4	90	90	79.6	90	90
	6'-0"	71.4	69.2	90	90	80.7	73.4	75.1	90	90	76.3	90	90
12'-0"	4'-6"	90	88.4	90	90	90	90	90	90	90	90	90	90
	4'-9"	86.5	83.7	90	90	90	88.9	90	90	90	90	90	90
	5'-0"	82.1	79.6	90	90	90	84.4	86.4	90	90	87.7	90	90
	5'-3"	78.2	75.8	90	90	88.4	80.4	82.3	90	90	83.6	90	90
	5'-6"	74.7	72.3	90	90	84.4	76.8	78.5	90	90	79.8	90	90
	5'-9"	71.4	69.2	90	90	80.7	73.4	75.1	90	90	76.3	90	90
	6'-0"	68.4	66.3	90	90	77.3	70.4	72.0	89.9	90	73.1	90	90
12'-6"	4'-3"	90	89.9	90	90	90	95.4	90	90	90	90	90	90
	4'-6"	87.6	84.9	90	90	90	90.1	90	90	90	90	90	90
	4'-9"	83.0	80.4	90	90	90	85.3	87.3	90	90	88.7	90	90
	5'-0"	78.8	76.4	90	90	89.1	81.1	82.9	90	90	84.2	90	90
	5'-3"	75.1	72.7	90	90	84.8	77.2	79.0	90	90	80.2	90	90
	5'-6"	71.7	69.4	90	90	81.0	73.7	75.4	90	90	76.6	90	90
	5'-9"	68.6	66.4	90	90	77.5	70.5	72.1	88.0	90	73.2	90	90
	6'-0"	65.7	63.6	90	90	74.2	67.6	69.1	84.3	90	70.2	90	90

MULLION SPAN "L"	MULLION DIMENS. "b"	DESIGN LOAD OF ANCHOR BOLTS (psf) POSITIVE OR NEGATIVE											
		CONDITION # 1		CONDITION # 3			CONDITION # 5		CONDITION # 7			CONDITION # 1A, 5A	
		OPTIONAL ANCHOR BOLTS TYPE											
		A	B	C	D	E	A1	B1	C	D	E	C	D
13'-0"	4'-0"	90	90	90	90	90	97.4	90	90	90	90	90	90
	4'-3"	89.2	86.4	90	90	90	91.7	90	90	90	90	90	90
	4'-6"	84.2	81.6	90	90	90	86.6	88.6	90	90	90	90	90
	4'-9"	79.8	77.3	90	90	90	82.2	84.0	90	90	85.2	90	90
	5'-0"	75.8	73.4	90	90	85.7	77.9	79.8	90	90	81.0	90	90
	5'-3"	72.2	69.9	90	90	81.6	74.2	76.0	90	90	77.1	90	90
	5'-6"	68.9	66.8	90	90	77.9	70.9	72.5	88.5	90	73.6	90	90
	5'-9"	65.9	63.9	90	90	74.5	67.8	69.4	84.6	90	70.4	90	90
	6'-0"	63.2	61.2	86.7	90	71.4	65.0	66.5	81.1	90	67.5	86.8	90
13'-6"	4'-0"	90	88.4	90	90	90	90	90	90	90	90	90	90
	4'-3"	85.9	83.2	90	90	90	88.3	90	90	90	90	90	90
	4'-6"	81.1	78.6	90	90	90	83.4	85.3	90	90	86.7	90	90
	4'-9"	76.8	74.4	90	90	86.8	79.0	80.8	90	90	82.1	90	90
	5'-0"	73.0	70.7	90	90	82.5	75.1	76.8	90	90	78.0	90	90
	5'-3"	69.5	67.3	90	90	78.6	71.5	73.1	89.2	90	74.3	90	90
	5'-6"	66.4	64.3	87.2	90	75.0	68.2	69.8	85.2	90	70.9	90	90
	5'-9"	63.5	61.5	83.5	90	71.7	65.3	66.8	81.5	90	67.8	87.2	90
	6'-0"	60.8	58.9	90	90	68.7	62.6	64.0	78.1	90	65.0	83.6	90
14'-0"	3'-9"	90	90	90	90	90	90	90	90	90	90	90	90
	4'-0"	88.0	85.2	90	90	90	90	90	90	90	90	90	90
	4'-3"	82.8	80.2	90	90	90	85.2	87.1	90	90	88.5	90	90
	4'-6"	78.2	75.8	90	90	88.4	80.4	82.3	90	90	83.6	90	90
	4'-9"	74.1	71.8	90	90	83.7	76.2	78.0	90	90	79.2	90	90
	5'-0"	70.4	68.2	90	90	79.5	72.4	74.1	90	90	75.2	90	90
	5'-3"	67.0	64.9	90	90	75.8	68.9	70.5	86.1	90	71.6	90	90
	5'-6"	64.0	62.0	89.9	90	72.3	65.8	67.3	82.1	90	68.4	87.9	90
	5'-9"	61.2	59.3	84	90	69.2	62.9	64.4	78.6	90	65.4	84.1	90
	6'-0"	58.7	56.8	80.5	90	66.3	60.3	61.7	75.3	90	62.7	80.6	90

NOTE: MULLION SPAN "L" FOR A GIVEN MULLION DIMENSION "b" SHALL NOT EXCEED MAXIMUN VALUES INDICATED ON SCHEDULE ON SHEET 22.

WALTER A. TILLIT JR., P.E.
STRUCTURAL ENGINEER
FL. LIC.NO. 44167

APR 12 2006

TILTECO INC.

TILLIT TESTING & ENGINEERING COMPANY
6355 NW 36th STREET, STE. 305
MIAMI, FLORIDA 33166
FL E.B. LICENSE No. 0006719

PRODUCT REVISED
as complying with the Florida Building Code
Acceptance No. 06-0306.01
Expiration Date 03/04/11
By
Miami Dade Product Control Division

RESERVED FOR METRO-DADE USE ONLY

YKK ap America

YKK AP AMERICA, INC.
5630 GWALTNEY DRIVE
ATLANTA, GEORGIA 30336

SYSTEM	SCALE
YHC 300 INSULATED GLAZING	1/2

DESCRIPTION: ANCHOR BOLT GUIDE -SINGLE SPAN-

DRAWING NUMBER	REV.
YHC-300-OG-IL	

APPROVED BY	DRAWN BY	DATE	SHEET NO.
JIA	JIA	8/05/02	24A OF 30

G:\SYSDWGS\YHC300OG\DADE\INSULATED\LARGEMISSILE\YHC300P24AIL.DWG

MAXIMUM DESIGN WIND LOAD "W" (psf) SCHEDULE FOR A GIVEN GLASS TYPE AND GLASS PANEL DIMENSIONS WIDTH "b" (in) x LENGTH "a" (in)

REV.	DESCRIPTION	BY	DATE
B	ASTM E 1300-98	L.G.	4/7/06

GLASS TYPE "A1"

WIDTH "b"	LENGTH "a"	MAXIMUM DESIGN LOAD "W"
24"	from 24" to 42"	±90.0
	48"	±81.0
	54"	±75.0
	60"	±70.0
	66"	±66.0
	72"	±63.0
	78"	±61.0
	84"	±59.0
	90"	±58.0
	96"	±57.0
	102"	±56.0
	108"	±55.0
	114"	±54.0
	120"	±53.0
30"	30"	±90.0
	36"	±84.9
	42"	±73.2
	48"	±62.4
	54"	±55.8
	60"	±50.3
	66"	±47.0
	72"	±43.9
	78"	±41.4
	84"	±39.9
	90"	±38.7
	96"	±37.6
	102"	±36.7
	108"	±36.0
	114"	±35.3
	120"	±34.7

WIDTH "b"	LENGTH "a"	MAXIMUM DESIGN LOAD "W"
36"	36"	±74.0
	42"	±62.9
	48"	±55.4
	54"	±49.2
	60"	±43.7
	66"	±39.6
	72"	±36.2
	78"	±32.5
	84"	±30.3
	90"	±28.9
	96"	±27.6
	102"	±26.4
	108"	±25.6
	114"	±25.0
	120"	±24.4
42"	42"	±57.2
	48"	±50.6
	54"	±45.8
	60"	±40.7
	66"	±37.1
	72"	±33.2
	78"	±30.0
	84"	±27.3
	90"	±25.2
	96"	±23.4
	102"	±21.9
	108"	±20.7
	114"	±20.0
	120"	±19.3

WIDTH "b"	LENGTH "a"	MAXIMUM DESIGN LOAD "W"
48"	48"	±47.3
	54"	±42.2
	60"	±39.2
	66"	±35.4
	72"	±31.9
	78"	±29.1
	84"	±26.5
	90"	±24.4
	96"	±22.4
	102"	±20.6
	108"	±19.3
	112"	±18.5
54"	54"	±39.8
	60"	±36.6
	66"	±33.7
	72"	±30.5
	78"	±28.2
	84"	±25.9
	90"	±24.0
	96"	±22.1
	100"	±20.8
60"	60"	±34.3
	66"	±31.1
	72"	±29.1
	78"	±27.0
	84"	±25.0
	90"	±23.6
66"	66"	±29.4
	72"	±27.3
	78"	±25.5
	82"	±24.6
72"	72"	±25.6
	75"	±24.8

GLASS TYPE "A2"

WIDTH "b"	LENGTH "a"	MAXIMUM DESIGN LOAD "W"
24"	from 24" to 120"	±90.0
30"	from 30" to 66"	±90.0
	72"	±87.8
	78"	±82.8
	84"	±79.9
	90"	±77.4
	96"	±75.3
	102"	±73.5
	108"	±72.0
	114"	±70.6
	120"	±69.4
36"	from 36" to 54"	±90.0
	60"	±87.4
	66"	±79.3
	72"	±72.4
	78"	±65.1
	84"	±60.6
	90"	±57.9
	96"	±55.2
	102"	±52.9
	108"	±51.2
	114"	±50.0
	120"	±48.9
42"	from 42" to 54"	±90.0
	60"	±81.4
	66"	±74.3
	72"	±66.5
	78"	±60.1
	84"	±54.6
	90"	±50.4
	96"	±46.9
	102"	±43.9
	108"	±41.5
	114"	±40.0
	120"	±38.7

WIDTH "b"	LENGTH "a"	MAXIMUM DESIGN LOAD "W"
48"	48"	±90.0
	54"	±84.5
	60"	±78.4
	66"	±70.9
	72"	±63.9
	78"	±58.2
	84"	±53.1
	90"	±48.9
	96"	±44.8
	102"	±41.2
	108"	±38.6
	112"	±37.1
54"	54"	±79.6
	60"	±73.2
	66"	±67.4
	72"	±61.1
	78"	±56.5
	84"	±51.8
	90"	±48.1
	96"	±44.3
	100"	±41.6
60"	60"	±68.5
	66"	±62.3
	72"	±58.3
	78"	±54.0
	84"	±50.1
	90"	±47.2
66"	66"	±58.9
	72"	±54.6
	78"	±51.0
	82"	±49.2
72"	72"	±51.3
	75"	±49.7

GLASS TYPE "A3"

WIDTH "b"	LENGTH "a"	MAXIMUM DESIGN LOAD "W"
24"	from 24" to 120"	±90.0
30"	from 30" to 120"	±90.0
36"	from 36" to 120"	±90.0
42"	from 42" to 96"	±90.0
	102"	±87.8
	108"	±82.9
	114"	±80.1
	120"	±77.4

WIDTH "b"	LENGTH "a"	MAXIMUM DESIGN LOAD "W"
48"	from 48" to 89"	±90.0
	96"	±89.6
	102"	±82.3
	108"	±77.1
	112"	±74.2
54"	from 54" to 90"	±90.0
	96"	±89.6
	100"	±83.2
57"	from 57" to 95"	±90.0
60"	from 60" to 90"	±90.0
66"	from 60" to 82"	±90.0
72"	from 72" to 75"	±90.0

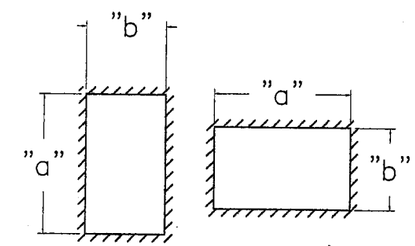

a ≥ b ALWAYS

GLASS PANEL SCHEDULE LEGEND

DIM. a & b REFER TO D.L.O. ON SHOP DRAWINGS.

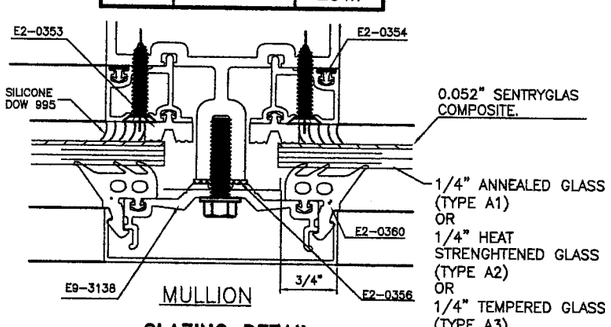

GLAZING DETAIL

FOR GLASS TYPES "A1", "A2" & "A3"

B ASTM E 1300-98

WALTER A. TILLIT JR., P.E.
STRUCTURAL ENGINEER
FL. LIC.NO. 44167

APR 13 2006

TILLECO INC.

TILLIT TESTING & ENGINEERING COMPANY
6355 NW 36th STREET, STE. 305
MIAMI, FLORIDA 33166
FL E.B. LICENSE No. 0008719

PRODUCT REVISED
as complying with the Florida Building Code
Acceptance No 06-0306.01
Expiration Date 03/04/11
By
Miami Dade Product Control Division

RESERVED FOR METRO-DADE USE ONLY

YKK AP America
YKK AP AMERICA, INC.
5630 GWALTNEY DRIVE
ATLANTA, GEORGIA 30336

SYSTEM	SCALE
YHC 300 INSULATED GLAZING SYS.	1/2

DESCRIPTION: GLASS CAPACITY CHARTS

DRAWING NUMBER	REV.
YHC-300-OG-IL	

APPROVED BY	DRAWN BY	DATE	SHEET NO.
JIA	JIA	8/5/02	25 OF 30

G:\SYSDWGS\YHC300OG\DADE\INSULATED\LARGEMISSILE\YHC300p25IL.DWG

MAXIMUM DESIGN WIND LOAD "W" (psf) SCHEDULE FOR A GIVEN GLASS TYPE AND GLASS PANEL DIMENSIONS WIDTH "b" (in) x LENGTH "a" (in)

REV.	DESCRIPTION	BY	DATE
B	ASTM E 1300-98	L.G.	4/7/06

GLASS TYPE "E1"

WIDTH "b"	LENGTH "a"	MAXIMUM DESIGN LOAD "W"
24"	from 24" to 120"	±90.0
30"	from 30" to 60"	±90.0
	66"	±89.3
	72"	±84.2
	78"	±79.9
	84"	±77.0
	90"	±74.9
	96"	±73.1
	102"	±71.6
	108"	±70.2
	114"	±68.9
	120"	±67.8
36"	from 36" to 48"	±90.0
	54"	±79.8
	60"	±72.7
	66"	±66.9
	72"	±62.1
	78"	±59.3
	84"	±56.7
	90"	±54.5
	96"	±52.7
	102"	±51.0
	108"	±49.6
	114"	±48.3
	120"	±47.2
42"	42"	±87.6
	48"	±75.4
	54"	±66.4
	60"	±60.1
	66"	±55.1
	72"	±50.8
	78"	±46.9
	84"	±44.4
	90"	±42.2
	96"	±40.3
	102"	±38.7
	108"	±37.6
	114"	±36.6
	120"	±35.7

WIDTH "b"	LENGTH "a"	MAXIMUM DESIGN LOAD "W"
48"	48"	±66.6
	54"	±58.9
	60"	±53.3
	66"	±47.3
	72"	±43.5
	78"	±40.1
	84"	±37.3
	90"	±35.5
	96"	±33.6
	102"	±31.8
	108"	±30.5
	112"	±29.5
54"	54"	±53.9
	60"	±47.6
	66"	±43.6
	72"	±39.6
	78"	±36.8
	84"	±34.0
	90"	±31.4
	96"	±29.7
	100"	±28.7
60"	60"	±52.7
	66"	±47.7
	72"	±44.2
	78"	±40.9
	84"	±37.5
	90"	±35.3
66"	66"	±44.6
	72"	±41.1
	78"	±37.9
	82"	±36.6
72"	72"	±38.3
	75"	±37.0

GLASS TYPE "E2"

WIDTH "b"	LENGTH "a"	MAXIMUM DESIGN LOAD "W"
24"	from 24" to 120"	±90.0
30"	from 30" to 120"	±90.0
36"	from 36" to 118"	±90.0
42"	from 42" to 78"	±90.0
	84"	±88.7
	90"	±84.5
	96"	±80.6
	102"	±77.5
	108"	±75.2
	114"	±73.2
	120"	±71.5
48"	from 48" to 66"	±90.0
	72"	±87.0
	78"	±80.2
	84"	±74.5
	90"	±70.9
	96"	±67.1
	102"	±63.6
	108"	±60.9
	112"	±59.0
54"	from 54" to 60"	±90.0
	66"	±87.2
	72"	±79.3
	78"	±73.5
	84"	±68.0
	90"	±62.8
	96"	±59.4
	100"	±57.4
60"	from 60" to 66"	±90.0
	72"	±88.5
	78"	±81.9
	84"	±74.9
	90"	±70.6
66"	66"	±89.3
	72"	±82.2
	78"	±75.7
	82"	±73.2
72"	72"	±76.6
	75"	±74.0

GLASS TYPE "E3"

WIDTH "b"	LENGTH "a"	MAXIMUM DESIGN LOAD "W"
24"	from 24" to 120"	±90.0
30"	from 30" to 120"	±90.0
36"	from 36" to 120"	±90.0
42"	from 42" to 120"	±90.0
48"	from 48" to 112"	±90.0
54"	from 54" to 100"	±90.0
60"	from 60" to 90"	±90.0
66"	from 66" to 82"	±90.0
72"	from 72" to 75"	±90.0

TILLECO INC.

TILLIT TESTING & ENGINEERING COMPANY
6355 NW 36th STREET, STE. 305
MIAMI, FLORIDA 33166
FL E.B. LICENSE No. 0006719

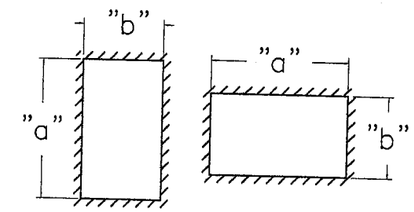

a ≥ b ALWAYS

GLASS PANEL SCHEDULE LEGEND

DIM. a & b REFER TO D.L.O. ON SHOP DRAWINGS.

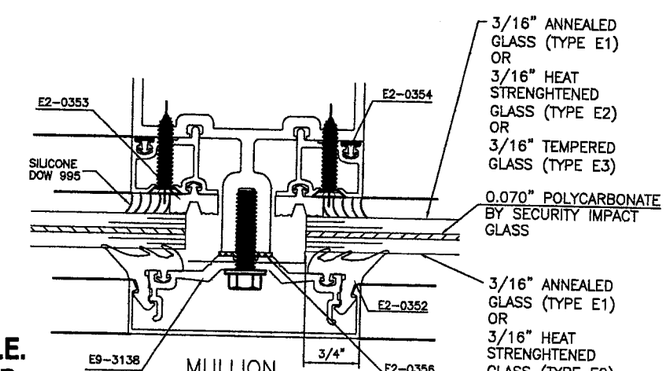

GLAZING DETAIL

FOR GLASS TYPES "E1", "E2", & "E3"

B ASTM E 1300-98

WALTER A. TILLIT JR., P.E.
STRUCTURAL ENGINEER
FL. LIC.NO. 44167

APR 1 2 2006

PRODUCT REVISED
as complying with the Florida Building Code
Acceptance No. 06-0306.01
Expiration Date 03/04/11
By
Miami-Dade Product Control Division

RESERVED FOR METRO-DADE USE ONLY

YKK ap America

YKK AP AMERICA, INC.
5630 GWALTNEY DRIVE
ATLANTA, GEORGIA 30336

SYSTEM	SCALE
YHC 300 INSULATED GLAZING SYS.	1/2

DESCRIPTION: GLASS CAPACITY CHARTS

DRAWING NUMBER	REV.
YHC-300-OG-IL	

APPROVED BY	DRAWN BY	DATE	SHEET NO.
JIA	JIA	8/5/02	26 OF 30

G:\SYSDWGS\YHC3000G\DADE\INSULATED\LARGEMISSILE\YHC300p26IL.DWG

MAXIMUM DESIGN WIND LOAD "W" (psf) SCHEDULE FOR A GIVEN GLASS TYPE AND GLASS PANEL DIMENSIONS WIDTH "b" (in) x LENGTH "a" (in)

REV.	DESCRIPTION	BY	DATE
B	ASTM E 1300-98	L.G.	4/7/06

TILTECO INC.

TILLIT TESTING & ENGINEERING COMPANY
6355 NW 36th STREET, STE. 305
MIAMI, FLORIDA 33166
FL E.B. LICENSE No. 0006719

GLASS TYPE "F1"

WIDTH "b"	LENGTH "a"	MAXIMUM DESIGN LOAD "W"
24"	from 24" to 120"	±90.0
30"	from 30" to 120"	±90.0
36"	from 36" to 96"	±90.0
	102"	±89.5
	108"	±87.1
	114"	±85.0
	118"	±83.7
42"	from 42" to 66"	±90.0
	72"	±86.9
	78"	±80.5
	84"	±76.0
	90"	±72.7
	96"	±69.8
	101"	±67.7
48"	from 48" to 54"	±90.0
	60"	±87.6
	66"	±78.1
	72"	±72.3
	78"	±67.1
	84"	±62.3
	89"	±59.9
54"	54"	±86.1
	60"	±75.6
	66"	±68.6
	72"	±62.3
	78"	±58.2
	79"	±57.5
60"	60"	±67.1
	66"	±60.7
	71"	±56.8
65"	65"	±57.6

GL. TYPES "F2" & "G".

WIDTH "b"	LENGTH "a"	MAXIMUM DESIGN LOAD "W"
24"	from 24" to 120"	±90.0
30"	from 30" to 120"	±90.0
36"	from 36" to 118"	±90.0
42"	from 42" to 101"	±90.0
48"	from 48" to 89"	±90.0
54"	from 54" to 79"	±90.0
60"	from 60" to 71"	±90.0
65"	65"	±90.0

GLASS TYPE "F3"

WIDTH "b"	LENGTH "a"	MAXIMUM DESIGN LOAD "W"
24"	from 24" to 120"	±90.0
30"	from 30" to 120"	±90.0
36"	from 36" to 118"	±90.0
42"	from 42" to 101"	±90.0
45"	from 45" to 95"	±90.0
48"	from 48" to 89"	±90.0
54"	from 54" to 79"	±90.0
60"	from 60" to 71"	±90.0
65"	65"	±90.0

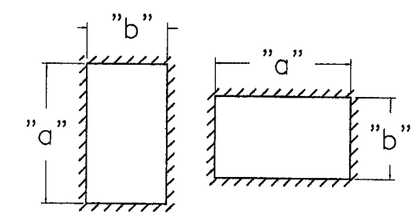

a ≥ b ALWAYS

GLASS PANEL SCHEDULE LEGEND

DIM. a & b REFER TO D.L.O. ON SHOP DRAWINGS.

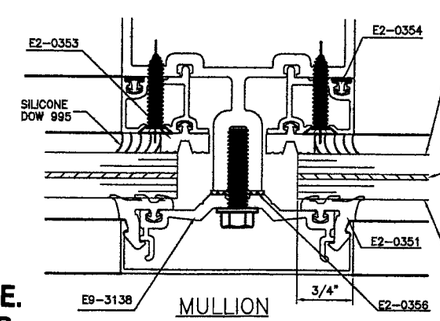

1/4" ANNEALED GLASS (TYPE F1)
OR
1/4" HEAT STRENGHTENED GLASS (TYPES F2 & G)
OR
1/4" TEMPERED GLASS (TYPE F3)

0.070" POLYCARBONATE BY SECURITY IMPACT GLASS (TYPES F1, F2, & F3)
OR
0.10" SAFLEX HP BY SOLUTIA (TYPE G)

1/4" ANNEALED GLASS (TYPE F1)
OR
1/4" HEAT STRENGHTENED GLASS (TYPES F2 & G)
OR
1/4" TEMPERED GLASS (TYPE F3)

WALTER A. TILLIT JR., P.E.
STRUCTURAL ENGINEER
FL. LIC.NO. 44167

APR 12 2006

GLAZING DETAIL

FOR GLASS TYPES "F1", "F2", "F3", & "G".

B ASTM E 1300-98

PRODUCT REVISED
as complying with the Florida Building Code
Acceptance No. 06-0306.01
Expiration Date 03/04/11
By
Miami-Dade Product Control Division

RESERVED FOR METRO-DADE USE ONLY

YKK ap America
YKK AP AMERICA, INC.
5630 GWALTNEY DRIVE
ATLANTA, GEORGIA 30336

SYSTEM	SCALE
YHC 300 INSULATED GLAZING SYS.	1/2

DESCRIPTION: GLASS CAPACITY CHARTS

DRAWING NUMBER	REV.
YHC-300-OG-IL	

APPROVED BY	DRAWN BY	DATE	SHEET NO.
JIA	JIA	8/5/02	27 of 30

G:\SYSDWGS\YHC3000G\DADE\INSULATED\LARGEMISSILE\YHC300p27IL.DWG

MAXIMUM DESIGN WIND LOAD "W" (psf) SCHEDULE FOR A GIVEN GLASS TYPE AND GLASS PANEL DIMENSIONS WIDTH "b" (in) x LENGTH "a" (in)

REV.	DESCRIPTION	BY	DATE
B	ASTM E 1300-98 & AIR SPACE	L.G.	4/7/06

GLASS TYPE "11"

WIDTH "b"	LENGTH "a"	MAXIMUM DESIGN LOAD "W"
24"	from 24" to 120"	±90.0
30"	from 30" to 60"	±90.0
	66"	±84.7
	72"	±79.1
	78"	±74.5
	84"	±71.9
	90"	±69.6
	96"	±67.8
	102"	±66.2
	108"	±64.8
	114"	±63.5
	120"	±62.4
36"	from 36" to 48"	±90.0
	54"	±88.5
	60"	±78.7
	66"	±71.3
	72"	±65.1
	78"	±58.6
	84"	±54.5
	90"	±52.1
	96"	±49.6
	102"	±47.6
	108"	±46.1
	114"	±45.0
	120"	±44.0

WIDTH "b"	LENGTH "a"	MAXIMUM DESIGN LOAD "W"
42"	from 36" to 48"	±90.0
	54"	±82.4
	60"	±73.3
	66"	±66.9
	72"	±59.8
	78"	±54.1
	84"	±49.2
	90"	±45.4
	96"	±42.2
	102"	±39.5
	108"	±37.3
	114"	±36.0
	120"	±34.8
48"	48"	±85.2
	54"	±76.0
	60"	±70.5
	66"	±63.8
	72"	±57.5
	78"	±52.4
	84"	±47.8
	90"	±44.0
	96"	±40.3
	102"	±37.1
	108"	±34.7
	112"	±33.4

WIDTH "b"	LENGTH "a"	DESIGN LOAD "W"
54"	54"	±71.6
	60"	±65.8
	66"	±60.6
	72"	±55.0
	78"	±50.8
	84"	±46.6
	90"	±43.3
	96"	±39.8
	100"	±37.5
60"	60"	±61.7
	66"	±56.1
	72"	±52.5
	78"	±48.6
	84"	±45.1
	90"	±42.4
66"	66"	±53.0
	72"	±49.1
	78"	±45.9
	82"	±44.3
72"	72"	±46.2
	75"	±44.7

GLASS TYPE "12"

WIDTH "b"	LENGTH "a"	MAXIMUM DESIGN LOAD "W"
24"	from 24" to 120"	±90.0
30"	from 30" to 120"	±90.0
36"	from 36" to 114"	±90.0
	120"	±88.0
42"	from 42" to 90"	±90.0
	96"	±84.4
	102"	±79.1
	108"	±74.6
	114"	±72.1
	120"	±69.6
48"	from 48" to 84"	±90.0
	90"	±86.5
	96"	±80.6
	102"	±74.1
	108"	±69.4
	112"	±66.8
54"	from 54" to 100"	±90.0
	90"	±86.5
	96"	±79.7
	100"	±74.9
60"	from 60" to 84"	±90.0
	90"	±84.9
66"	from 66" to 78"	±90.0
	82"	±88.6
72"	72"	±90.0
	75"	±89.4

GLASS TYPE "13"

WIDTH "b"	LENGTH "a"	MAXIMUM DESIGN LOAD "W"
24"	from 24" to 120"	±90.0
30"	from 30" to 120"	±90.0
36"	from 36" to 120"	±90.0
42"	from 42" to 120"	±90.0
48"	from 48" to 112"	±90.0
54"	from 54" to 100"	±90.0
60"	from 60" to 90"	±90.0
66"	from 66" to 82"	±90.0
72"	from 72" to 75"	±90.0

TILTECO INC.

TILLIT TESTING & ENGINEERING COMPANY
6355 NW 36th STREET, STE. 305
MIAMI, FLORIDA 33166
FL E.B. LICENSE No. 0006719

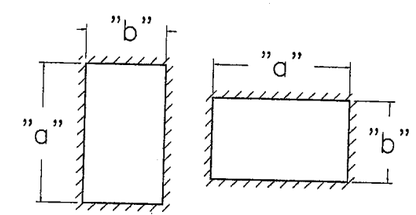

a ≥ b ALWAYS

GLASS PANEL SCHEDULE LEGEND

DIM. a & b REFER TO D.L.O. ON SHOP DRAWINGS.

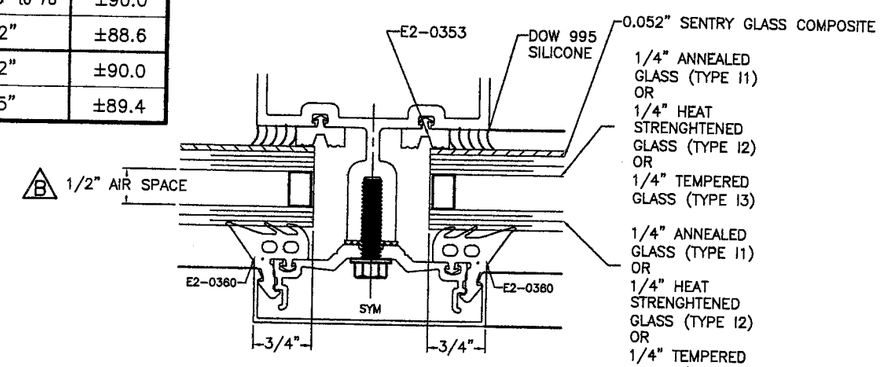

GLAZING DETAIL

FOR GLASS TYPES "11", "12" & "13"

B ASTM E 1300-98

WALTER A. TILLIT JR., P.E.
STRUCTURAL ENGINEER
FL. LIC.NO. 44167

APR 12 2006

PRODUCT REVISED
as complying with the Florida Building Code
Acceptance No. 06-0306.01
Expiration Date 03/04/11
By Miami-Dade Product Control Division

RESERVED FOR METRO-DADE USE ONLY

YKK AP America

YKK AP AMERICA, INC.
5630 GWALTNEY DRIVE
ATLANTA, GEORGIA 30336

SYSTEM	SCALE
YHC 300 INSULATED GLAZING SYS.	1/2

DESCRIPTION: GLASS CAPACITY CHARTS

DRAWING NUMBER	REV.
YHC-300-OG-IL	

APPROVED BY	DRAWN BY	DATE	SHEET NO.
JIA	JIA	8/5/02	28 OF 30

G:\SYSDWGS\YHC3000G\DADE\INSULATED\LARGEMISSILE\YHC300p28IL.DWG

REV.	DESCRIPTION	BY	DATE
B	ASTM E 1300-98 & AIR SPACE	L.G.	4/7/06

MAXIMUM DESIGN WIND LOAD "W" (psf) SCHEDULE FOR A GIVEN GLASS TYPE AND GLASS PANEL DIMENSIONS WIDTH "b" (in) x LENGTH "a" (in)

TILLIT TESTING & ENGINEERING COMPANY
6355 NW 36th STREET, STE. 305
MIAMI, FLORIDA 33166
FL E.B. LICENSE No. 0006719

GLASS TYPE "K1"

WIDTH "b"	LENGTH "a"	MAXIMUM DESIGN LOAD "W"
24"	from 24" to 120"	±90.0
30"	from 30" to 78"	±90.0
	84"	±89.9
	90"	±87.5
	96"	±85.5
	102"	±83.6
	108"	±82.0
	114"	±80.5
	120"	±79.3
36"	from 36" to 54"	±90.0
	60"	±85.0
	66"	±78.2
	72"	±72.6
	78"	±69.2
	84"	±66.3
	90"	±63.7
	96"	±61.5
	102"	±59.6
	108"	±57.9
	114"	±56.5
	120"	±55.1
42"	42"	±90.0
	48"	±88.1
	54"	±77.5
	60"	±70.2
	66"	±64.4
	72"	±59.4
	78"	±54.8
	84"	±51.8
	90"	±49.3
	96"	±47.1
	102"	±45.3
	108"	±43.9
	114"	±42.8
	120"	±41.8

WIDTH "b"	LENGTH "a"	MAXIMUM DESIGN LOAD "W"
48"	48"	±77.9
	54"	±68.8
	60"	±62.3
	66"	±55.3
	72"	±50.8
	78"	±46.9
	84"	±43.5
	90"	±41.4
	96"	±39.2
	102"	±37.1
	108"	±35.6
	112"	±34.8
54"	54"	±62.9
	60"	±55.6
	66"	±50.9
	72"	±46.3
	78"	±43.0
	84"	±39.7
	90"	±36.7
	96"	±34.7
	100"	±33.5
60"	60"	±62.1
	66"	±56.2
	72"	±52.2
	78"	±48.3
	84"	±44.2
	90"	±41.6
66"	66"	±52.6
	72"	±48.5
	78"	±44.7
	82"	±43.1
72"	72"	±45.2
	75"	±43.6

GLASS TYPE "K2"

WIDTH "b"	LENGTH "a"	MAXIMUM DESIGN LOAD "W"
24"	from 24" to 120"	±90.0
30"	from 30" to 120"	±90.0
36"	from 36" to 120"	±90.0
42"	from 42" to 96"	±90.0
	102"	±89.2
	108"	±86.6
	114"	±84.3
	120"	±82.3
48"	from 48" to 78"	±90.0
	84"	±85.8
	90"	±81.7
	96"	±77.3
	102"	±73.2
	108"	±70.2
	112"	±68.7
54"	from 54" to 72"	±90.0
	78"	±84.7
	84"	±78.3
	90"	±72.3
	96"	±68.4
	100"	±66.1
60"	from 60" to 78"	±90.0
	84"	±87.3
	90"	±82.3
66"	from 66" to 72"	±90.0
	78"	±88.3
	82"	±85.6
72"	72"	±89.3
	75"	±86.2

GLASS TYPE "K3"

WIDTH "b"	LENGTH "a"	MAXIMUM DESIGN LOAD "W"
24"	from 24" to 120"	±90.0
30"	from 30" to 120"	±90.0
36"	from 36" to 120"	±90.0
42"	from 42" to 120"	±90.0
48"	from 48" to 112"	±90.0
54"	from 54" to 100"	±90.0
60"	from 60" to 90"	±90.0
66"	from 66" to 82"	±90.0
72"	from 72" to 75"	±90.0

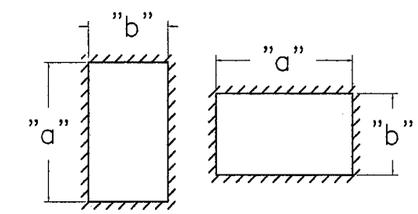

a ≥ b ALWAYS

GLASS PANEL SCHEDULE LEGEND

DIM. a & b REFER TO D.L.O. ON SHOP DRAWINGS.

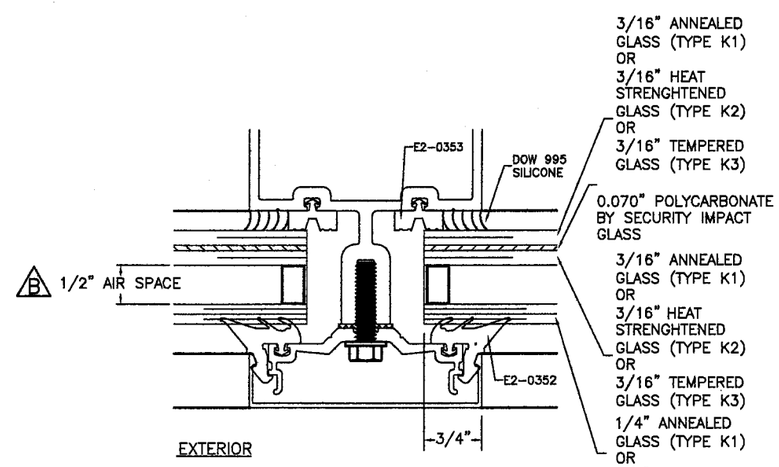

JAMB/HORIZONTAL

GLAZING DETAIL

FOR GLASS TYPES "K1", "K2", & "K3"

B ASTM E 1300-98

WALTER A. TILLIT JR., P.E.
STRUCTURAL ENGINEER
FL. LIC.NO. 44167

APR 12 2006

PRODUCT REVISED
as complying with the Florida Building Code
Acceptance No. 06-0306.01
Expiration Date 05/04/11
By
Miami Dade Product Control Division

RESERVED FOR METRO-DADE USE ONLY

YKK ap America
YKK AP AMERICA, INC.
5630 GWALTNEY DRIVE
ATLANTA, GEORGIA 30336

SYSTEM	SCALE
YHC 300 INSULATED GLAZING SYS.	1/2

DESCRIPTION: GLASS CAPACITY CHARTS

DRAWING NUMBER	REV.
YHC-300-OG-IL	

APPROVED BY	DRAWN BY	DATE	SHEET NO.
JIA	JIA	8/5/02	29 OF 30

G:\SYSDWGS\YHC3000G\DADE\INSULATED\LARGEMISSILE\YHC300p29IL.DWG

MAXIMUM DESIGN WIND LOAD "W" (psf) SCHEDULE FOR A GIVEN GLASS TYPE AND GLASS PANEL DIMENSIONS WIDTH "b" (in) x LENGTH "a" (in)

REV.	DESCRIPTION	BY	DATE
B	ASTM E 1300-98 & AIR SPACE	L.G.	4/7/06

TILLECO INC.

TILLIT TESTING & ENGINEERING COMPANY
6355 NW 36th STREET, STE. 305
MIAMI, FLORIDA 33166
FL E.B. LICENSE No. 0006719

GLASS TYPE "L1"

WIDTH "b"	LENGTH "a"	MAXIMUM DESIGN LOAD "W"
24"	from 24" to 120"	±90.0
30"	from 30" to 120"	±90.0
36"	from 36" to 108"	±90.0
	114"	±88.7
	120"	±86.7
42"	from 42" to 72"	±90.0
	78"	±83.9
	84"	±79.2
	90"	±75.9
	96"	±72.9
	102"	±70.2
	108"	±67.9
	114"	±65.8
	120"	±64.4
48"	from 48" to 60"	±90.0
	66"	±81.4
	72"	±75.4
	78"	±70.0
	84"	±65.0
	90"	±62.0
	96"	±59.2
	102"	±56.9
	108"	±54.7
	112"	±53.4
54"	54"	±89.8
	60"	±78.8
	66"	±71.6
	72"	±65.0
	78"	±60.7
	84"	±56.7
	90"	±53.0
	96"	±49.6
	100"	±48.0

WIDTH "b"	LENGTH "a"	MAXIMUM DESIGN LOAD "W"
60"	60"	±70.0
	66"	±63.3
	72"	±58.4
	78"	±53.5
	84"	±49.1
	90"	±46.1
66"	66"	±58.5
	72"	±53.2
	78"	±48.2
	82"	±46.1
72"	72"	±59.6
	75"	±57.1

GLASS TYPES "L2", "M"

WIDTH "b"	LENGTH "a"	MAXIMUM DESIGN LOAD "W"
24"	from 24" to 120"	±90.0
30"	from 30" to 120"	±90.0
36"	from 36" to 120"	±90.0
42"	from 42" to 120"	±90.0
48"	from 48" to 112"	±90.0
54"	from 54" to 100"	±90.0
60"	from 60" to 90"	±90.0
66"	from 66" to 82"	±90.0
72"	from 72" to 75"	±90.0

GLASS TYPE "L3"

WIDTH "b"	LENGTH "a"	MAXIMUM DESIGN LOAD "W"
24"	from 24" to 120"	±90.0
30"	from 30" to 120"	±90.0
36"	from 36" to 120"	±90.0
42"	from 42" to 120"	±90.0
48"	from 48" to 112"	±90.0
54"	from 54" to 100"	±90.0
60"	from 60" to 90"	±90.0
66"	from 66" to 82"	±90.0
72"	from 72" to 75"	±90.0

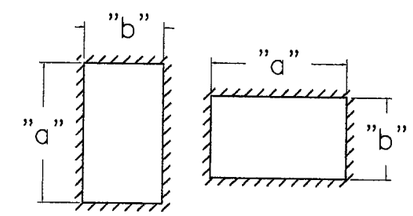

a ≥ b ALWAYS

GLASS PANEL SCHEDULE LEGEND

DIM. a & b REFER TO D.L.O. ON SHOP DRAWINGS.

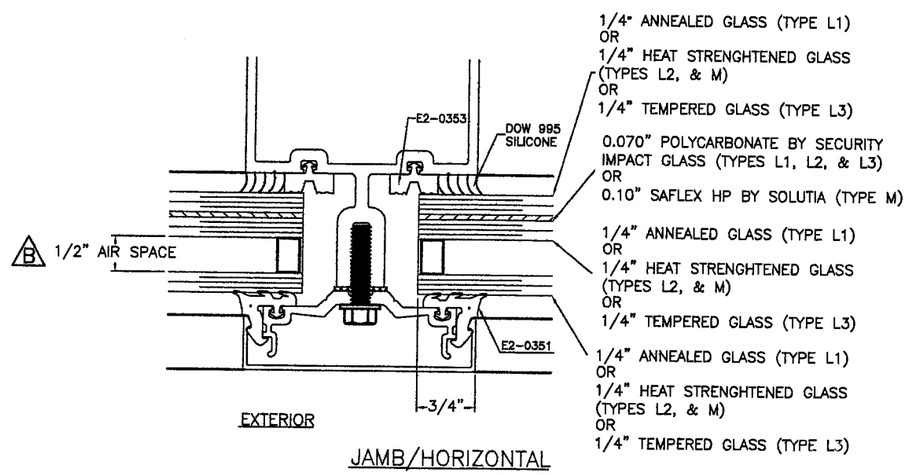

JAMB/HORIZONTAL

GLAZING DETAIL

FOR GLASS TYPES "L1", "L2", "L3", "M"

B ASTM E 1300-98

WALTER A. TILLIT JR., P.E.
STRUCTURAL ENGINEER
FL. LIC.NO. 44167

APR 1 2 2006

PRODUCT REVISED
as complying with the Florida Building Code
Acceptance No. 06-0306.01
Expiration Date 03/04/11
By
Miami-Dade Product Control Division

RESERVED FOR METRO-DADE USE ONLY

YKK ap America

YKK AP AMERICA, INC.
5630 GWALTNEY DRIVE
ATLANTA, GEORGIA 30336

SYSTEM	SCALE
YHC 300 INSULATED GLAZING SYS.	1/2

DESCRIPTION: GLASS CAPACITY CHARTS

DRAWING NUMBER: YHC-300-OG-IL — REV.:

APPROVED BY	DRAWN BY	DATE	SHEET NO.
JIA	JIA	8/5/02	30 OF 30

G:\SYSDWGS\YHC300OG\DADE\INSULATED\LARGEMISSILE\YHC300p30IL.DWG