MIAMI-DADE COUNTY

BUILDING CODE COMPLIANCE OFFICE (BCCO)
PRODUCT CONTROL DIVISION

MIAMI-DADE COUNTY, FLORIDA
METRO-DADE FLAGLER BUILDING
140 WEST FLAGLER STREET, SUITE 1603
MIAMI, FLORIDA 33130-1563
(305) 375-2901 FAX (305) 375-2908
www.buildingcodeonline.com

NOTICE OF ACCEPTANCE (NOA)

YKK AP America, Inc.
332 Firetower Road
Dublin, GA 31021

SCOPE:

This NOA is being issued under the applicable rules and regulations governing the use of construction materials. The documentation submitted has been reviewed by Miami-Dade County Product Control Division and accepted by the Board of Rules and Appeals (BORA) to be used in Miami Dade County and other areas where allowed by the Authority Having Jurisdiction (AHJ).

This NOA shall not be valid after the expiration date stated below. The Miami-Dade County Product Control Division (In Miami Dade County) and/or the AHJ (in areas other than Miami Dade County) reserve the right to have this product or material tested for quality assurance purposes. If this product or material fails to perform in the accepted manner, the manufacturer will incur the expense of such testing and the AHJ may immediately revoke, modify, or suspend the use of such product or material within their jurisdiction. BORA reserves the right to revoke this acceptance, if it is determined by Miami-Dade County Product Control Division that this product or material fails to meet the requirements of the applicable building code.

This product is approved as described herein, and has been designed to comply with the Florida Building Code, including the High Velocity Hurricane Zone.

DESCRIPTION: Series "YHC-300 O/G" Hurricane Curtain Wall Single Glazing -S.M.I.

APPROVAL DOCUMENT: Drawing No. **YHC-300-OG-SS**, titled "YHC-300 O/G Hurricane Curtain Wall Single Glazing Small Missile Impact Rated", sheets 1 through 24, prepared by manufacturer, dated 08/05/02 with revision "**B**" on 04/07/06, signed and sealed by Walter A. Tillit Jr., P.E., and bearing the Miami-Dade County Product Control Renewal stamp with the Notice of Acceptance number and expiration date by the Miami-Dade County Product Control Division.

MISSILE IMPACT RATING: Small Missile Impact

LABELING: Each unit shall bear a permanent label with the manufacturer's name or logo, city, state and following statement: "Miami-Dade County Product Control Approved", unless otherwise noted herein.

RENEWAL of this NOA shall be considered after a renewal application has been filed and there has been no change in the applicable building code negatively affecting the performance of this product.

TERMINATION of this NOA will occur after the expiration date or if there has been a revision or change in the materials, use, and/or manufacture of the product or process. Misuse of this NOA as an endorsement of any product, for sales, advertising or any other purposes shall automatically terminate this NOA. Failure to comply with any section of this NOA shall be cause for termination and removal of NOA.

ADVERTISEMENT: The NOA number preceded by the words Miami-Dade County, Florida, and followed by the expiration date may be displayed in advertising literature. If any portion of the NOA is displayed, then it shall be done in its entirety.

INPECTION: A copy of this entire NOA shall be provided to the user by the manufacturer or its distributors and shall be available for inspection at the job site at the request of the Building Official.

This NOA **revises and renews NOA # 02-1118.03** and consists of this page 1 and evidence pages E-1 and E-2, as well as approval document mentioned above.

The submitted documentation was reviewed by **Jaime D. Gascon, P.E.**

PRODUCT CONTROL ACCEPTED

J Gascon
5/4/06

YKK AP America, Inc.

NOTICE OF ACCEPTANCE: EVIDENCE SUBMITTED

A. DRAWINGS

1. Manufacturer's die drawings and sections.
2. Drawing No. **YHC-300-OG-SS**, titled "YHC-300 O/G Hurricane Curtain Wall Single Glazing Small Missile Impact Rated", sheets 1 through 24, prepared by manufacturer, dated 08/05/02 with revision "**B**" on 04/07/06, signed and sealed by Walter A. Tillit Jr., P.E.

B. TESTS

1. Test report on: 1) Air Infiltration Test, per FBC, TAS 202-94
   2) Uniform Static Air Pressure Test, Loading per FBC, TAS 202-94
   3) Water Resistance Test, per FBC, TAS 202-94
   4) Small Missile Impact Test per FBC, TAS 201-94
   5) Cyclic Wind Pressure Loading per FBC, TAS 203-94 along with marked drawings and installation diagram of unit of O-O, prepared by Hurricane Test Laboratory, Inc., Test Report No. **HTL- 0231-0401-01** dated 04/11/01, signed and sealed by Vinu J. Abraham, P.E.

   "Submitted under NOA# 02-1118.03"

C. CALCULATIONS

1. Revised Anchor Calculations and structural analysis, complying with FBC-2004, prepared by TILTECO Inc., dated 02/07/06, signed and sealed by Walter A. Tillit, P.E.

   Complies with ASTM- E 1300-98

D. QUALITY ASSURANCE

1. Miami Dade Building Code Compliance Office (BCCO).

E. MATERIAL CERTIFICATIONS

1. Notice of Acceptance No. **05-1208.02** issued to **E.I. DuPont DeNemours** for "***Dupont Butacite ® PVB***" dated 01/05/06, expiring on 12/11/10.
2. Notice of Acceptance No. **01-0205.02** issued to **Solutia, Inc.** for "***Saflex/Keepsafe Maximum***" dated 05/17/01, expiring on 05/21/06.

F. STATEMENTS

1. Statement letter of conformance and no financial interest, dated 03/01/06, signed and sealed by Walter A. Tillit, P.E.

Jaime D. Gascon, P.E.
Chief, Product Control Division
NOA No 06-0306.03
Expiration Date: March 04, 2011
Approval Date: May 18, 2006

NOTICE OF ACCEPTANCE: EVIDENCE SUBMITTED

G. OTHER

1. Letter from the consultant, dated 04/20/06 stating that the product is in compliance with the Florida Building Code (FBC).
2. Notice of Acceptance No. **02-1118.03,** issued to YKK AP America, Inc., for the **Series "YHC-300 O/G" Hurricane Curtain Wall Single Glazing -S.M.I.,** dated 02/06/03 and expiring on 03/04/06.

Jaime D. Gascon, P.E.
Chief, Product Control Division
NOA No 06-0306.03
Expiration Date: March 04, 2011
Approval Date: May 18, 2006

REV.	DESCRIPTION	BY	DATE
A	INDEX SHEET # & GENERAL NOTES	I.A.	2/28/06
B	GENERAL NOTE 6, ASTM E 1300-98	L.G.	4/7/06

YHC-300 O/G HURRICANE CURTAIN WALL SINGLE GLAZING
SMALL MISSILE IMPACT RATED

(SEE SEPARATE NOA FOR LARGE MISSILE AND/OR INSULATED GLAZING)

INDEX OF DRAWINGS

TYPES	CONTENTS	SHEET #
GENERAL	COVER SHT. & GENERAL NOTES	1
ELEVATIONS	ELEVATIONS KEYED TO SINGLE GLAZING DETAILS	2
GEN. DETAILS	TYPICAL SEALANT DETAILS	3
DETAILS FOR SINGLE GLAZING	TYPICAL DETAILS	4
	90° CORNER	5
	HEAD OPTIONS	6
	SILL OPTIONS	7
	STOREFRONT & DOOR	8,9
SECTION & ANCHOR DETAILS	INTERMEDIATE HORIZONTALS	10
	HEAD ANCHOR OPTIONS	11
	SILL ANCHOR OPTIONS	12
	SPLICE & ANCHOR CLIP	13,14,15
	MID-ANCHOR CLIP	16,17,18
	STOREFRONT & DOOR ANCHOR	19
MATERIAL LIST	BILL OF MATERIALS FOR SINGLE GLAZING	20
DESIGN LOAD VERIFICATION CHARTS.	MULLION CHART	21
	ANCHOR BOLT GUIDE -SINGLE SPAN-	22,22A,22B A
	ANCHOR BOLT GUIDE -TWIN SPAN-	23,23A A
	GLASS CHART	24

GENERAL NOTES: A

1. MAXIMUM DESIGN PRESSURE RATING IS +90 PSF, -90 PSF. DESIGN WIND LOADS SHALL DETERMINED AS PER SECTION 1620 OF THE ABOVE MENTIONED CODE. IN ORDER TO VERIFY THAT ALUMINUM PROFILES AND ANCHORS ON THIS DWG. AS TESTED WERE NOT OVERSTRESSED A 33% INCREASE IN ALLOWABLE STRESSES FOR WIND LOADS WAS NOT USED IN THEIR ANALYSIS.

2. SEE SHEET 21 TO DETERMINE MAX. DESIGN LOAD CAPACITY OF MULLION FOR VARIOUS CONFIGURATIONS AND REINFORCEMENT. THE RESULT SHALL BE USED AS THE SYSTEM MAXIMUM LOAD CAPACITY.

3. REFER TO ANCHOR SCHEDULE ON SHEET 2 FOR ANCHOR TYPE IDENTIFICATION. ALSO, SEE SHEETS 22, 22A, 22B & 23, 23A TO VERIFY THE DESIGN LOAD CAPACITY OF VARIOUS ANCHOR BOLTS TO BE USED WITH THE END OF MULLION ANCHORS. RESULTS FROM THIS VERIFICATION SHALL NOT EXCEED THE CAPACITY OF THE SYSTEM AS PREVIOUSLY DETERMINED ON NOTE 2.

4. THIS SYSTEM COMPLIES WITH THE SMALL IMPACT TEST REQUIREMENT PER THE 2004 EDITION OF THE FLORIDA BUILDING CODE WITH THE 2005 SUPPLEMENT AND THEREFORE NO SHUTTERS ARE REQUIRED. VALID ONLY FOR INSTALLATIONS ABOVE 30FT FROM GRADE. THIS SYSTEM HAS BEEN TESTED PER PROTOCOLS T.A.S. 201, 202 & 203 IN ACCORDANCE WITH SECTION 1609.1.4 OF THE F.B.C.

5. ALUMINUM ALLOY ON ALL STRUCTURAL MEMBERS SHALL BE 6063-T6 WITH A MINIMUM YIELD STRENGTH OF 25 KSI. ALL PRODUCTS WITH THE MARKING "YKK AP AMERICA" AND "MIAMI-DADE COUNTY PRODUCT CONTROL APPROVED" ARE IN COMPLIANCE WITH THIS SPECIFICATION FOR STRUCTURAL MEMBERS.

B 6. SEE SHEETS 24 TO DETERMINE DESIGN LOAD CAPACITY OF VARIOUS TYPES OF GLASS FOR DIFFERENT OPENING SIZES, BASED ON ASTM E 1300-98. HOWEVER, OTHER CONSIDERATIONS OF THE BUILDING CODE, REGARDING THE USE OF SAFETY GLASS, ETC. SHALL BE APPLIED AS NECESSARY. ALSO, GLASS MANUFACTURERS SHALL BE CONSULTED FOR THEIR RECOMMENDATIONS.

7. SHOP DRAWINGS PREPARED BASED ON THIS APPROVAL AND TAKING INTO ACCOUNT THE SPECIFIC JOB CONDITIONS, SHALL BE SUBMITTED TO THE BUILDING OFFICIAL AS PART OF THE PERMIT DOCUMENTS.

8. STRUCTURAL STEEL NOTED ON THESE DRAWINGS AS "STEEL BY OTHERS" MUST WITHSTAND THE LOADS IMPOSED BY THE CURTAIN WALL SYSTEM.

9. ALL ALUMINM IN CONTACT WITH STEEL SHALL COMPLY WITH SECTION 2003.8.4 OF THE FLORIDA BUILDING CODE.

GLASS TYPES APPROVED TO BE USED WITH THIS PRODUCT

(SEE SHEETS 24 TO DETERMINE DESIGN LOAD CAPACITY OF A PARTICULAR TYPE OF GLASS FOR DIFFERENT OPENING SIZES)

GLASS TYPE	DESCRIPTION	OVERALL NOMINAL THICKNESS	GLASS STR. QUALIFIED
P1	9/16" (1/4" GLASS + 0.060" PVB BUTACITE INTERLAYER BY DUPONT + 1/4" GLASS) HEAT STRENTHENED GLASS ONLY.	9/16"	HEAT STR. ONLY
P2	9/16" (1/4" GLASS + 0.060" PVB "SAFLEX" INTERLAYER BY SOLUTIA + 1/4" GLASS) HEAT STRENTHENED GLASS ONLY.	9/16"	HEAT STR. ONLY

PRODUCT REVISED
as complying with the Florida Building Code
Acceptance No. 06-0306.03
Expiration Date 03/04/11
By Miami Dade Product Control Division

RESERVED FOR METRO-DADE USE ONLY

YKK AP America
YKK AP AMERICA, INC.
5630 GWALTNEY DRIVE
ATLANTA, GEORGIA 30336

SYSTEM	SCALE
YHC 300 SINGLE GLAZING SYSTEM	NONE

DESCRIPTION: TABLE OF CONTENTS & NOTES

DRAWING NUMBER	REV.
YHC-300-OG-SS	A

APPROVED BY	DRAWN BY	DATE	SHEET NO.
JIA	RTB	8/5/02	1 of 24

TILTECO INC.
TILLIT TESTING & ENGINEERING COMPANY
6355 NW 36th STREET, STE. 305
MIAMI, FLORIDA 33166
FL E.B. LICENSE No. 0006719

WALTER A. TILLIT JR., P.E.
STRUCTURAL ENGINEER
FL. LIC.NO. 44167

APR 12 2006

G:\SYSDWGS\YHC300OG\DADE\SINGLE\SMALLMISSILE\YHC300p01ss.DWG

REV.	DESCRIPTION	BY	DATE
A	TO MEET FBC. 2004, ADD ANCHOR	I.A	3/01/06
B	NOTE 1. DOORS/STOREFRONTS N.O.A.	L.G.	4/7/06

YHC–300 SYSTEM – SMALL MISSILE

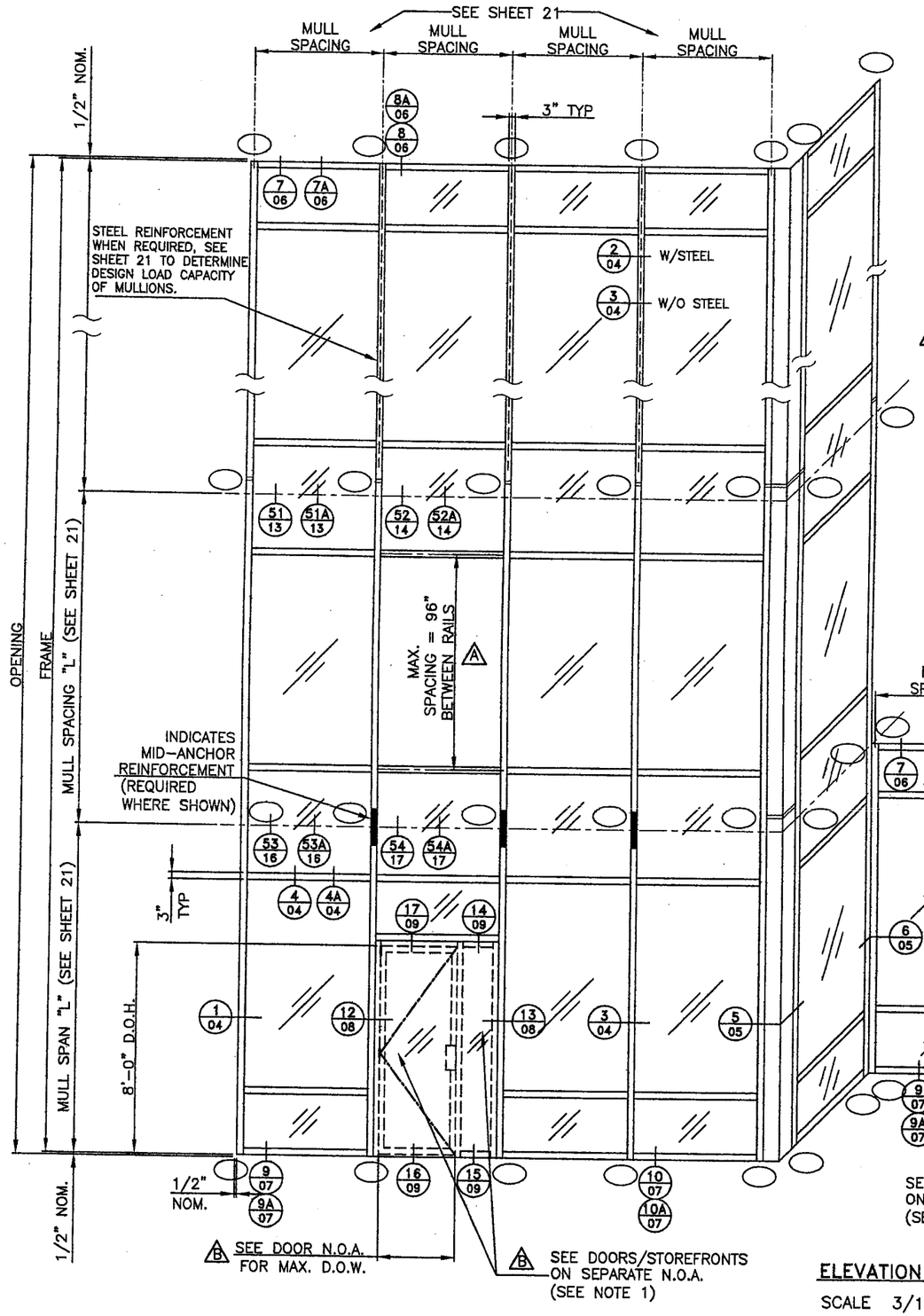

GENERAL NOTES FOR SINGLE GLAZING.

1. DOOR AND STOREFRONT DETAILED HEREIN ARE:
   DOOR; YKK MODEL 35H (PER CURRENT METRO–DADE N.O.A.)
   STOREFRONT; YKK MODEL YHS–50 (PER CURRENT METRO–DADE N.O.A.)
   REFER TO SPECIFIC DOCUMENTS ON THOSE PRODUCTS FOR FURTHER INFORMATION.
   B DOORS AND STOREFRONTS N.O.A.S ARE NOT PART OF THIS APPROVAL.

2. SEE SHEET 21 TO DETERMINE DESIGN LOAD CAPACITY OF MULLIONS WITH AND W/OUT STEEL REINFORCEMENT.

3. SEE SHEET 24 TO DETERMINE DESIGN LOAD CAPACITY OF VARIOUS TYPES OF GLASS FOR DIFFERENT OPENING SIZES.

ANCHOR SCHEDULE

SYMBOL	DESCRIPTION	SILL @ JAMB	SILL @ MULLION	HEAD @ JAMB	HEAD @ MULLION	INTERM. FLOOR @ JAMB	INTERM. FLOOR @ MULLION	REF. DET'S
J	"J" ANCHOR	•(1)	•(2)					FF/12, GG/12
F	"F" ANCHOR	•		•				BB/11, HH/12
T	"T" ANCHOR		•		•			CC/11, JJ/12
W	WINDLOAD CLIP			•(1)	•(2)	•(1)	•(2)	DD+EE/11, 51/13 52/14, 53A/16
D	DEADLOAD CLIP*					•(1)	•(2)	51A/13, 52A/14 53/16, 54/17
A MT	MODIFIED "T"	•		•				TT/19, UU/19

TYPICAL USE

* ONLY ONE DEADLOAD APPLICATION PER MULLION/JAMB SEGMENT, ANY OTHER ANCHOR IN THE SAME SEGMENT SHALL ALLOW FREE MOVEMENT DUE TO THERMAL EXPANSION. SEGMENTS SHALL BE CONNECTED BY MULLION SPLICE AS SHOWN ON SHEETS 13–15.

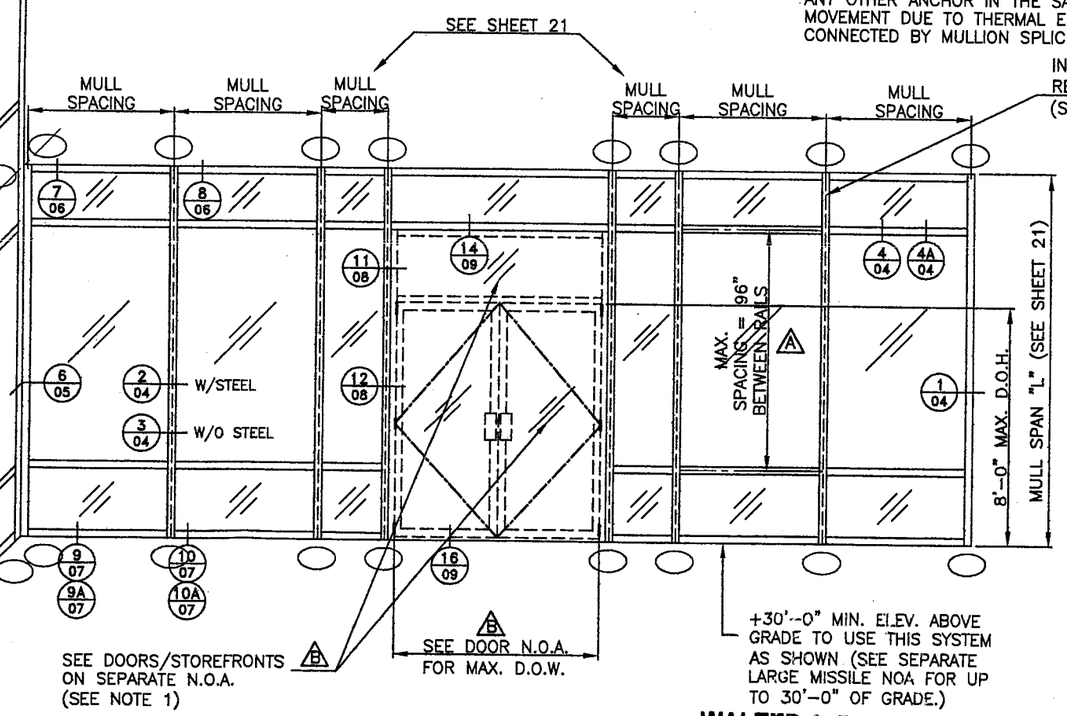

ELEVATION KEYED TO SINGLE GLAZING DETAILS

SCALE 3/16" = 1' – 0"

TILLECO INC.
TILLIT TESTING & ENGINEERING COMPANY
6355 NW 36th STREET, STE. 305
MIAMI, FLORIDA 33166
FL E.B. LICENSE No. 0006719

PRODUCT REVISED
as complying with the Florida Building Code
Acceptance No 06-0306.03
Expiration Date 03/04/11
By
Miami-Dade Product Control Division

RESERVED FOR METRO–DADE USE ONLY

YKK AP America
YKK AP AMERICA, INC.
5630 GWALTNEY DRIVE
ATLANTA, GEORGIA 30336

WALTER A. TILLIT JR., P.E.
STRUCTURAL ENGINEER
FL. LIC.NO. 44167

APR 12 2006

SYSTEM	SCALE
YHC 300 SINGLE GLAZING SYSTEM	1/2
DESCRIPTION: ELEVATION	
DRAWING NUMBER: YHC–300–OG–SS	REV. A

APPROVED BY	DRAWN BY	DATE	SHEET NO.
JIA	RTB	8/5/02	2 OF 24

G:\SYSDWGS\YCH3000G\DADE\SINGLE\SMALLMISSILE\YHC300p02ss.DWG

REV.	DESCRIPTION	BY	DATE
A	NO CHANGE THIS SHEET	JIA	2/6/06

TYPICAL SEALING DETAIL

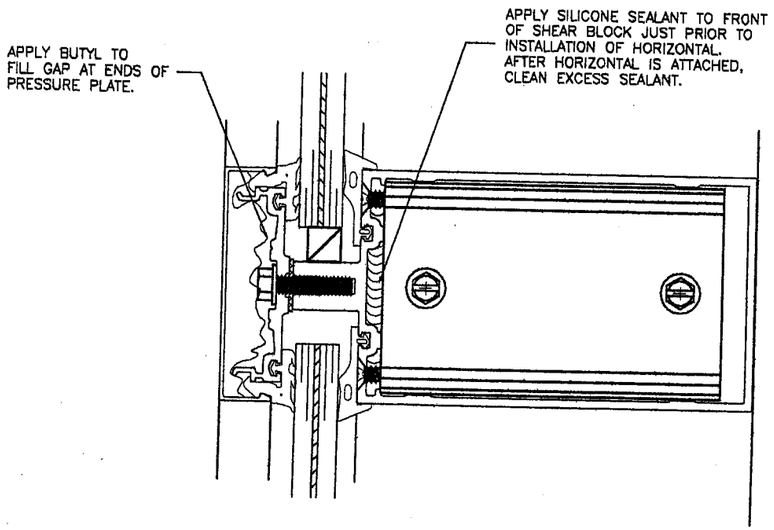

HORIZONTAL TO VERTICAL

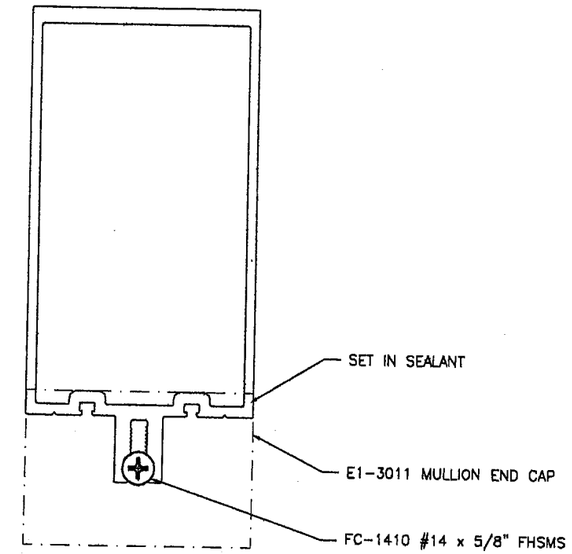

MULLION END CAP

(APPLY BEFORE MULLION ERECTION.)

PRODUCT REVISED
as complying with the Florida
Building Code
Acceptance No. 06-0306.03
Expiration Date 03/04/11
By
Miami Dade Product Control
Division

RESERVED FOR METRO-DADE USE ONLY

TILTECO INC.

TILLIT TESTING & ENGINEERING COMPANY
6355 NW 36th STREET, STE. 305
MIAMI, FLORIDA 33166
FL E.B. LICENSE No. 0006719

WALTER A. TILLIT JR., P.E.
STRUCTURAL ENGINEER
FL. LIC.NO. 44167

APR 12 2006

YKK AP America

YKK AP AMERICA, INC.
5630 GWALTNEY DRIVE
ATLANTA, GEORGIA 30336

SYSTEM	SCALE
YHC 300 SINGLE GLAZING SYSTEM	1/2

DESCRIPTION: TYPICAL SEALING AND GLAZING DETAILS

DRAWING NUMBER	REV.
YHC-300-OG-SS	A

APPROVED BY	DRAWN BY	DATE	SHEET NO.
JIA	RTB	8/5/02	3 OF 24

G:\SYSDWGS\YHC300OG\DADE\SINGLE\SMALLMISSILE\YHC300p03ss.DWG

REV.	DESCRIPTION	BY	DATE
A	SECTION 2	I.A	2/28/06

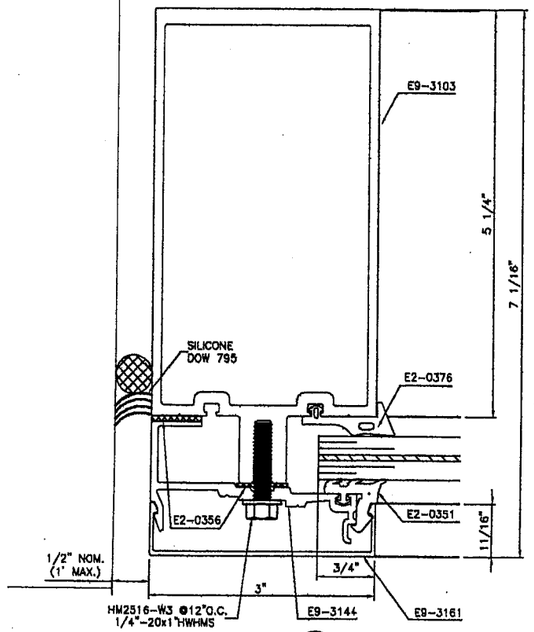

SECTION 1

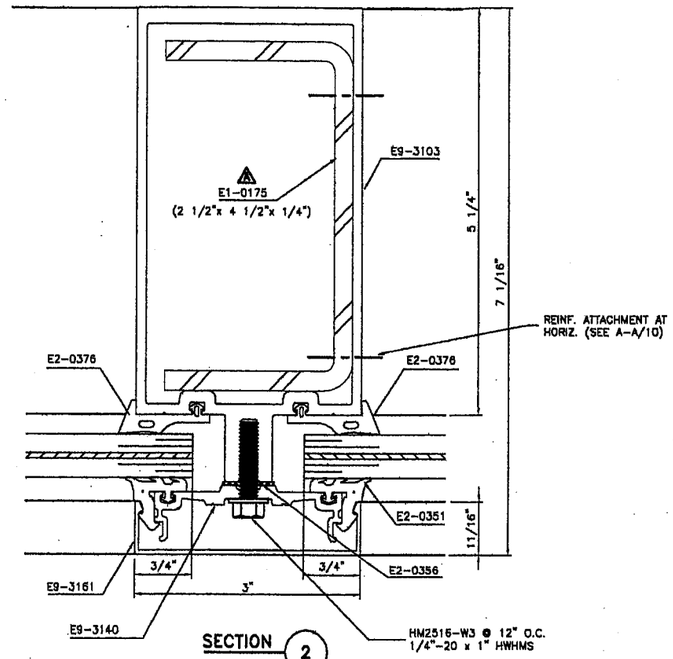

SECTION 2

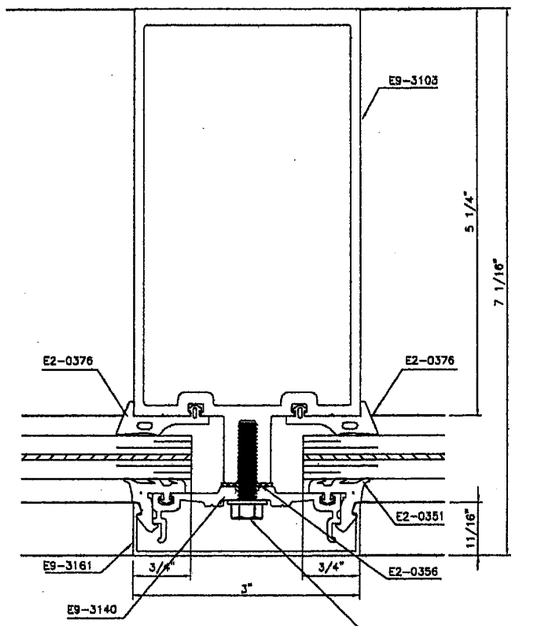

SECTION 3

NOTE:

1. 5/16" DIA. WEEPHOLE. (3)/HORIZ. LOCATED (1) @ 3" FROM EACH END & (1) @ MID-SPAN.

2. 5/16" DIA. WEEPHOLE. (2)/HORIZ. LOCATED @ 1/3 D.L.G. FROM ENDS.

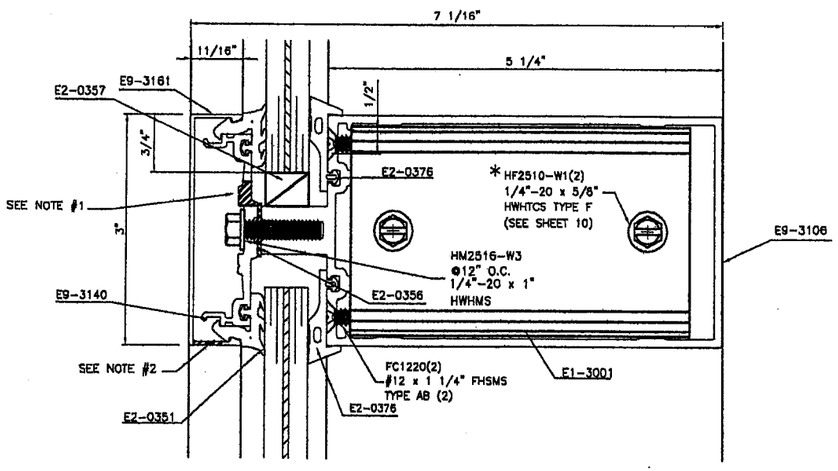

SECTION 4

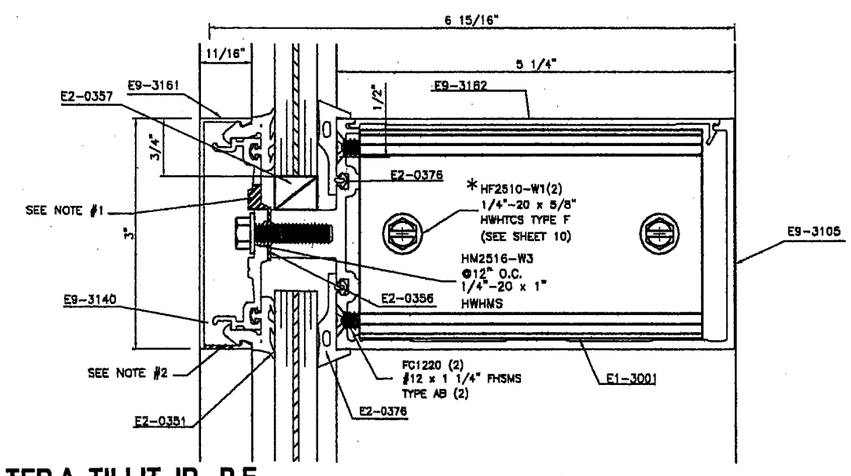

SECTION 4A

* REPLACE 5/8" LONG SCREW(HF2510) WITH 1" LONG SCREW(HF2516) FOR ATTACHMENT OF STEEL REINFORCEMENT WHEN STEEL REINFORCEMENT OCCURS. (SEE A-A ON SHT. 10)

TILTECO INC.

TILLIT TESTING & ENGINEERING COMPANY
6355 NW 36th STREET, STE. 305
MIAMI, FLORIDA 33166
FL E.B. LICENSE No. 0006719

WALTER A. TILLIT JR., P.E.
STRUCTURAL ENGINEER
FL. LIC.NO. 44167

APR 12 2006

PRODUCT REVISED
as complying with the Florida Building Code
Acceptance No. 06-0306.03
Expiration Date 03/04/11
By
Miami Dade Product Control Division

RESERVED FOR METRO-DADE USE ONLY

YKK AP America

YKK AP AMERICA, INC.
5630 GWALTNEY DRIVE
ATLANTA, GEORGIA 30336

SYSTEM	SCALE
YHC 300 SINGLE GLAZING SYSTEM	1/2

DESCRIPTION: TYPICAL DETAILS

DRAWING NUMBER	REV.
YHC-300-OG-SS	A

APPROVED BY	DRAWN BY	DATE	SHEET NO.
JIA	RTB	8/5/02	4 OF 24

G:\SYSDWGS\YHC300OG\DADE\SINGLE\SMALLMISSILE\YHC300p04ss.DWG

REV.	DESCRIPTION	BY	DATE
A	NO CHANGE THIS SHEET	JIA	2/6/06

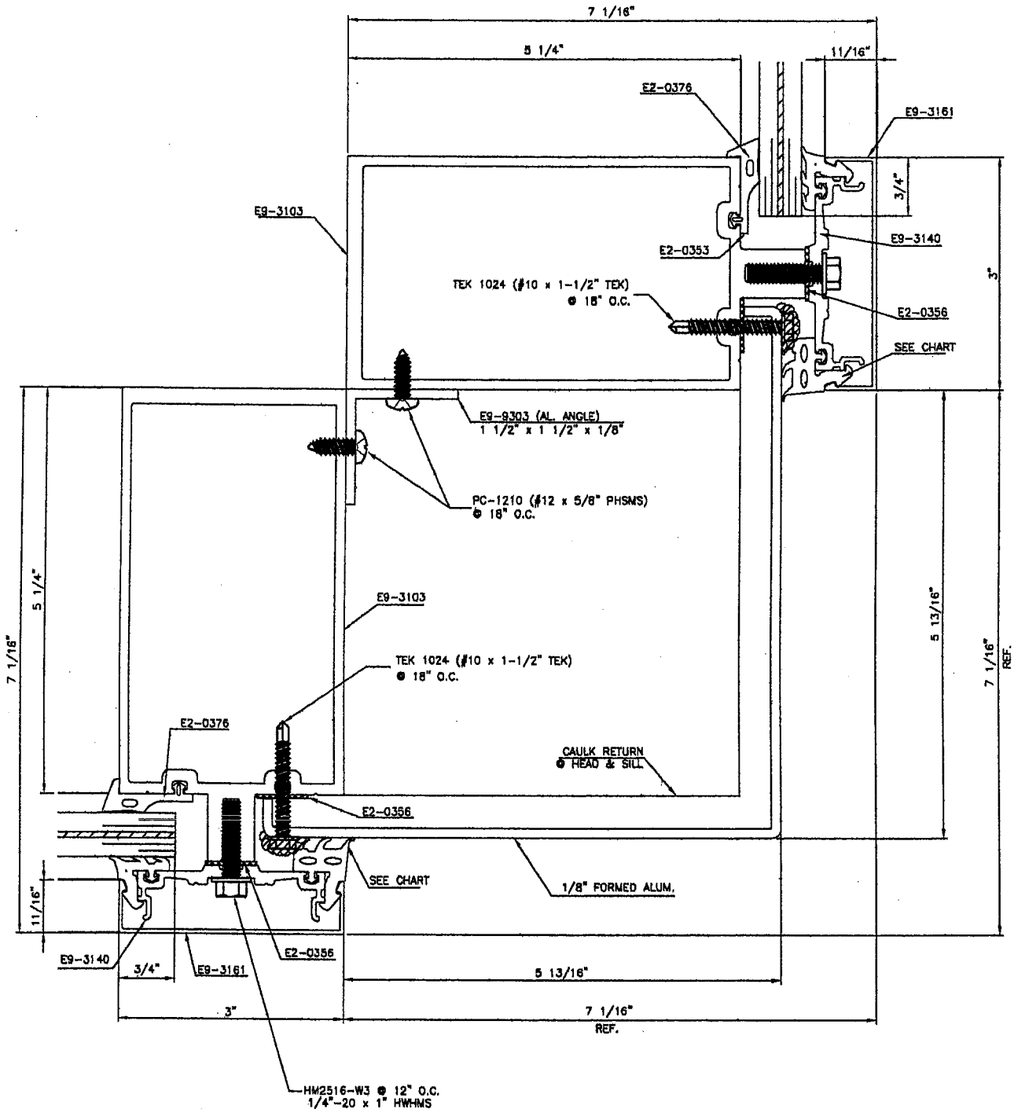

SECTION
OUTSIDE 90° CORNER (5)

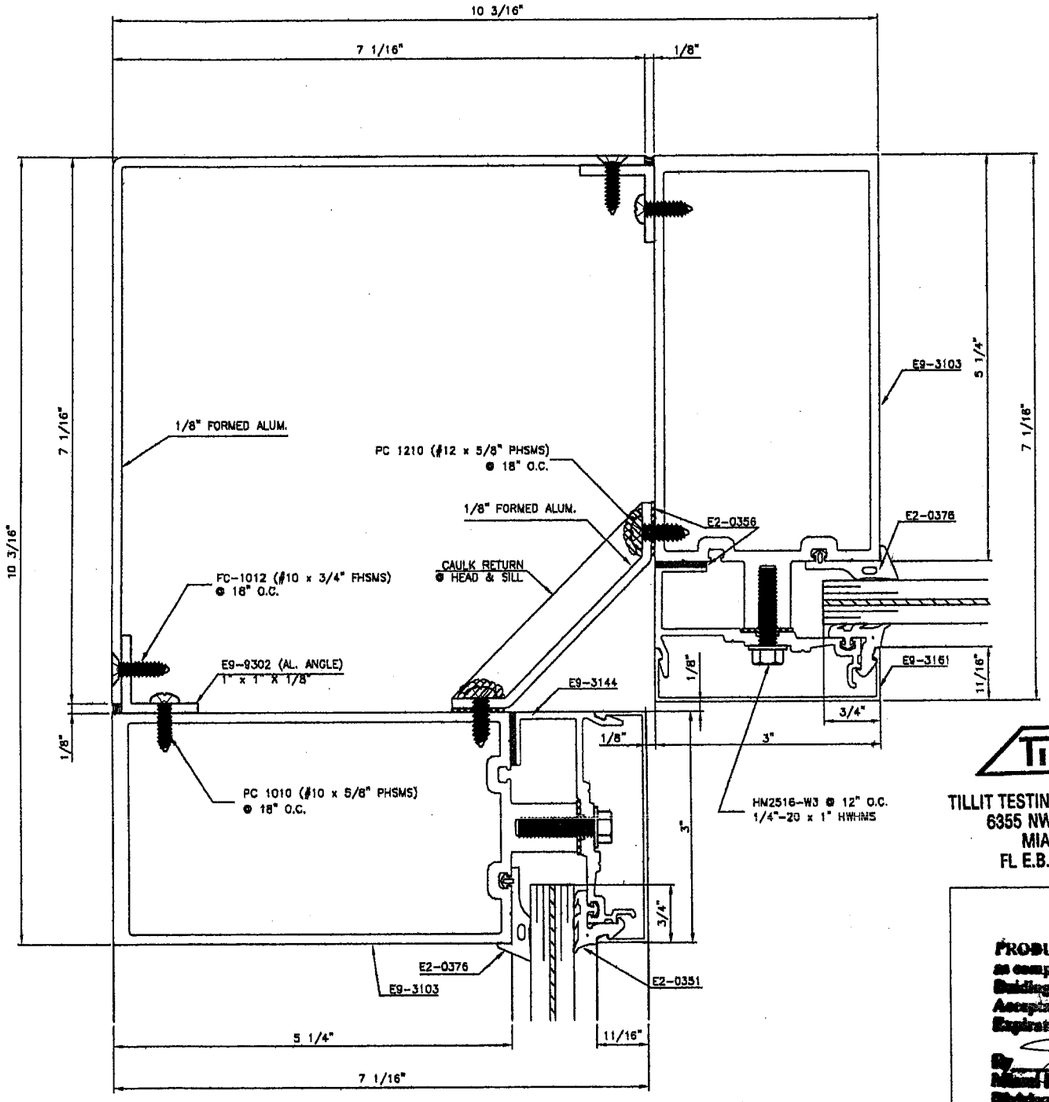

SECTION
INSIDE 90° CORNER (6)

TILTECO INC.

TILLIT TESTING & ENGINEERING COMPANY
6355 NW 36th STREET, STE. 305
MIAMI, FLORIDA 33166
FL E.B. LICENSE No. 0006719

PRODUCT REVISED
in complying with the Florida Building Code
Acceptance No 06-0306.03
Expiration Date 03/04/11
By
Miami Dade Product Control Division

RESERVED FOR METRO-DADE USE ONLY

YKK AP America

YKK AP AMERICA, INC.
5630 GWALTNEY DRIVE
ATLANTA, GEORGIA 30336

SYSTEM	SCALE
YHC 300 SINGLE GLAZING SYSTEM	1/2

DESCRIPTION: 90° CORNER DETAIL

DRAWING NUMBER	REV.
YHC-300-OG-SS	A

APPROVED BY	DRAWN BY	DATE	SHEET NO.
JIA	RTB	8/5/02	5 OF 24

WALTER A. TILLIT JR., P.E.
STRUCTURAL ENGINEER
FL. LIC.NO. 44167

APR 12 2006

G:\SYSDWGS\YHC300OG\DADE\SINGLE\SMALLMISSILE\YHC300p05ss.DWG

REV.	DESCRIPTION	BY	DATE
A	SECTIONS 7, 7A & 8	I.A	2/28/06

SECTION 7
SHOWING "F" ANCHOR

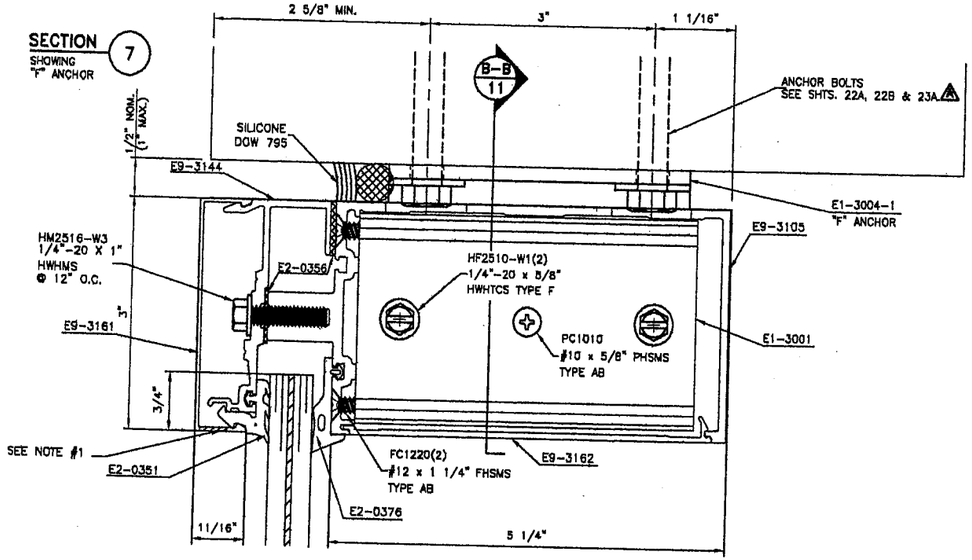

SECTION 8
SHOWING "T" ANCHOR

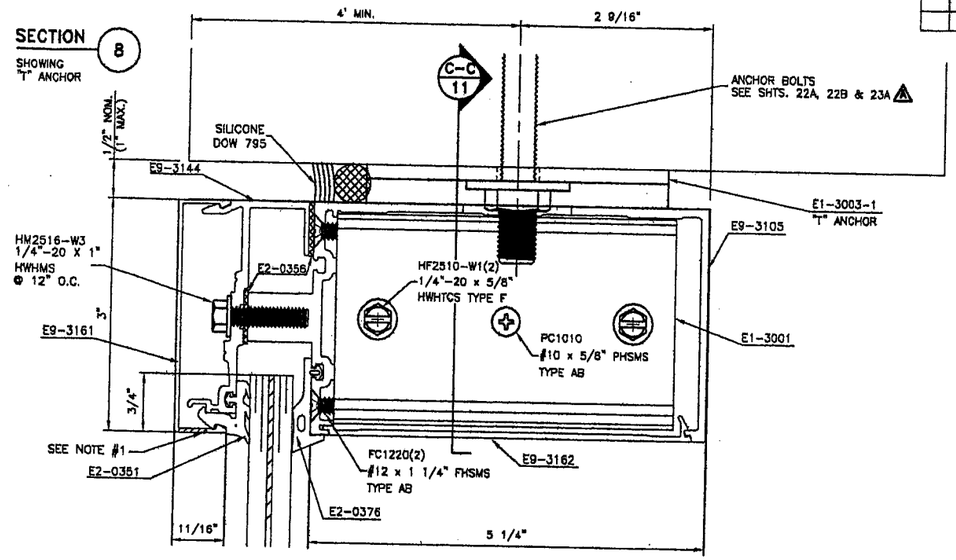

ALTERNATE SECTION 7A
SHOWING "F" ANCHOR

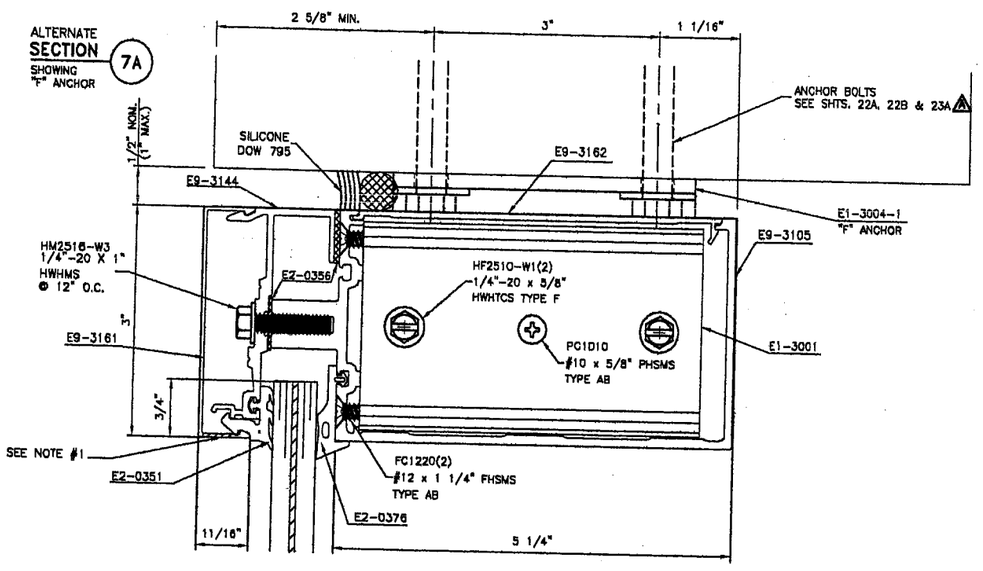

SECTION 8A
SHOWING ANCHOR CLIP

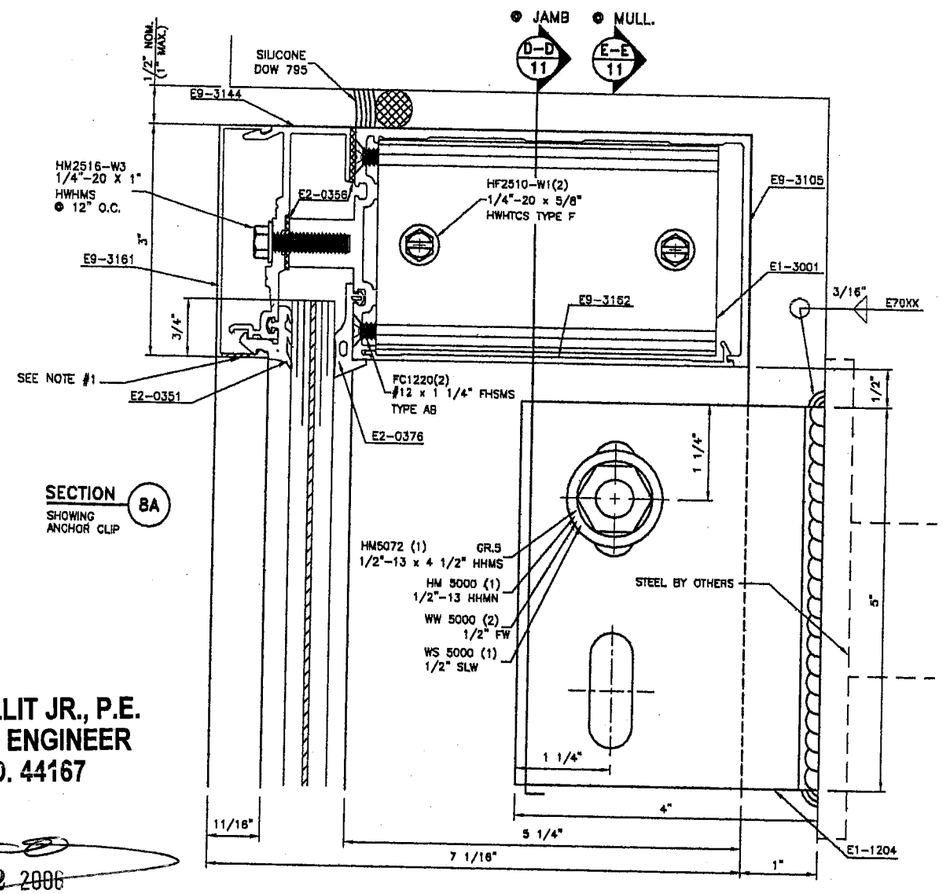

NOTE:
1. 5/16" DIA. WEEPHOLE. (2)/HORIZ. LOCATED @ 1/3 D.L.G. FROM ENDS.

TILLECO INC.
TILLIT TESTING & ENGINEERING COMPANY
6355 NW 36th STREET, STE. 305
MIAMI, FLORIDA 33166
FL E.B. LICENSE No. 0006719

PRODUCT REVISED
as complying with the Florida Building Code
Acceptance No. 06-0306.03
Expiration Date 03/04/11
By
Miami Dade Product Control Division

RESERVED FOR METRO-DADE USE ONLY

YKK AP America
YKK AP AMERICA, INC.
5630 GWALTNEY DRIVE
ATLANTA, GEORGIA 30336

SYSTEM	SCALE
YHC 300 SINGLE GLAZING SYSTEM	1/2

DESCRIPTION: HEAD DETAILS

DRAWING NUMBER	REV.
YHC-300-OG-SS	A

APPROVED BY	DRAWN BY	DATE	SHEET NO.
JIA	RTB	2/28/06	6 OF 24

WALTER A. TILLIT JR., P.E.
STRUCTURAL ENGINEER
FL. LIC.NO. 44167

APR 12 2006

G:\SYSDWGS\YHC3000G\DADE\SINGLE\SMALLMISSILE\YHC300p06ss.DWG

REV.	DESCRIPTION	BY	DATE
A	SECTIONS 9, 9A, 10 & 10A	I.A	2/28/06
B	EDGE DISTANCE REQ'D.	C.V.	4/24/06

SECTION 9
SHOWING "J" ANCHOR

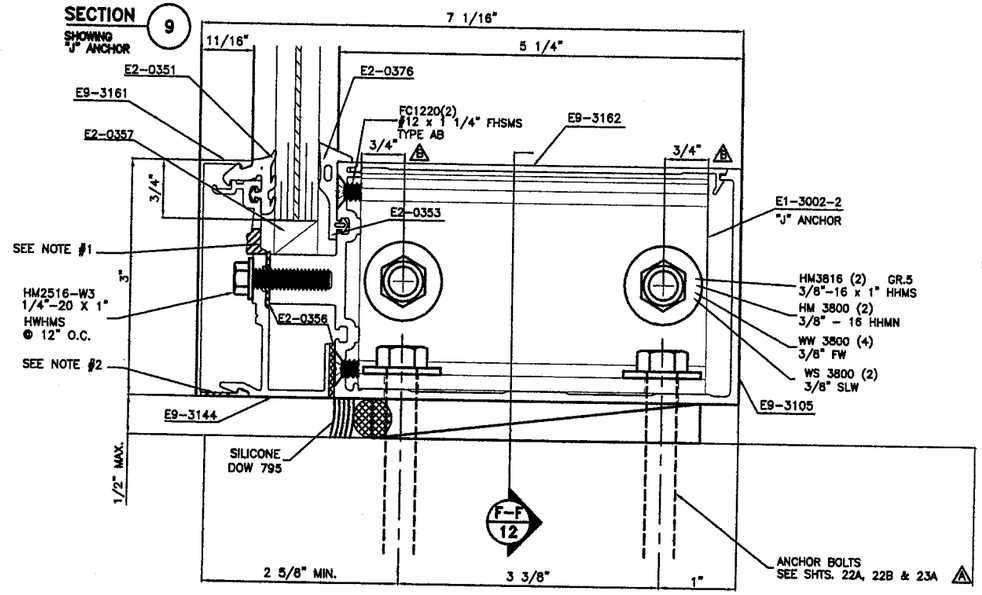

SECTION 10
SHOWING "J" ANCHOR

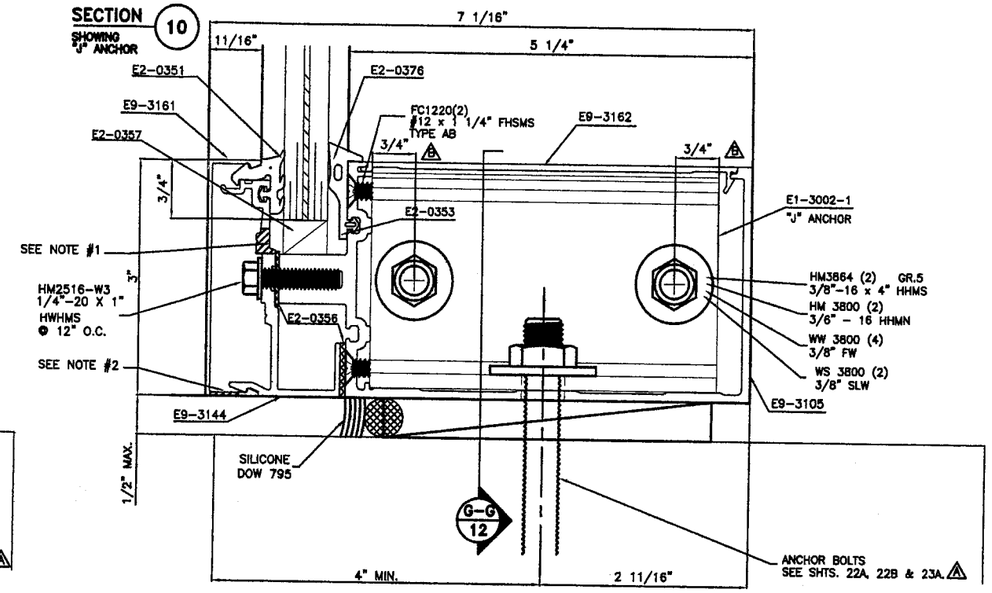

SECTION 9A
SHOWING "F" ANCHOR

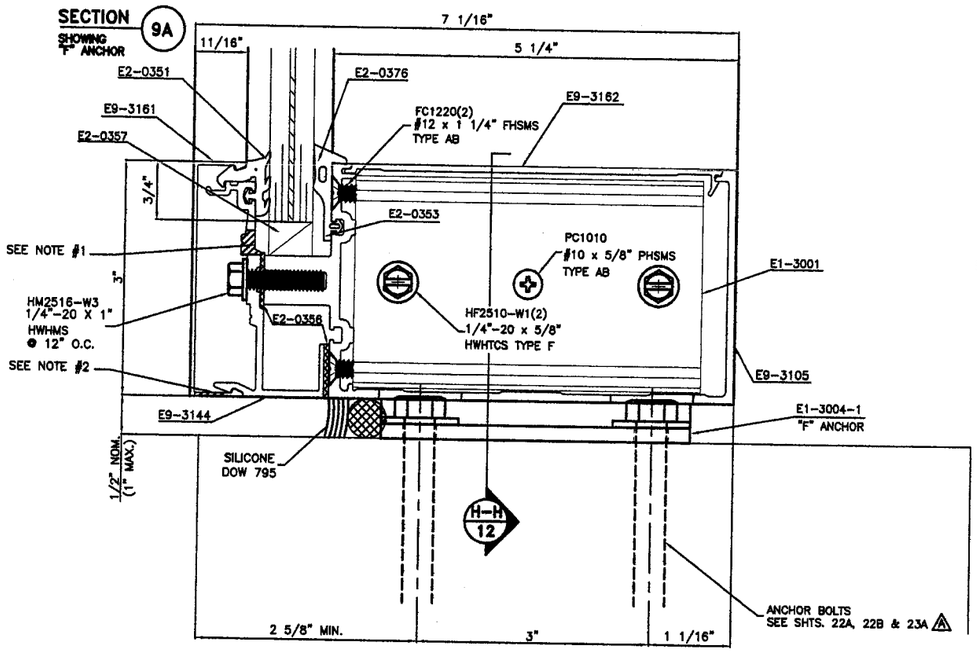

SECTION 10A
SHOWING "F" ANCHOR

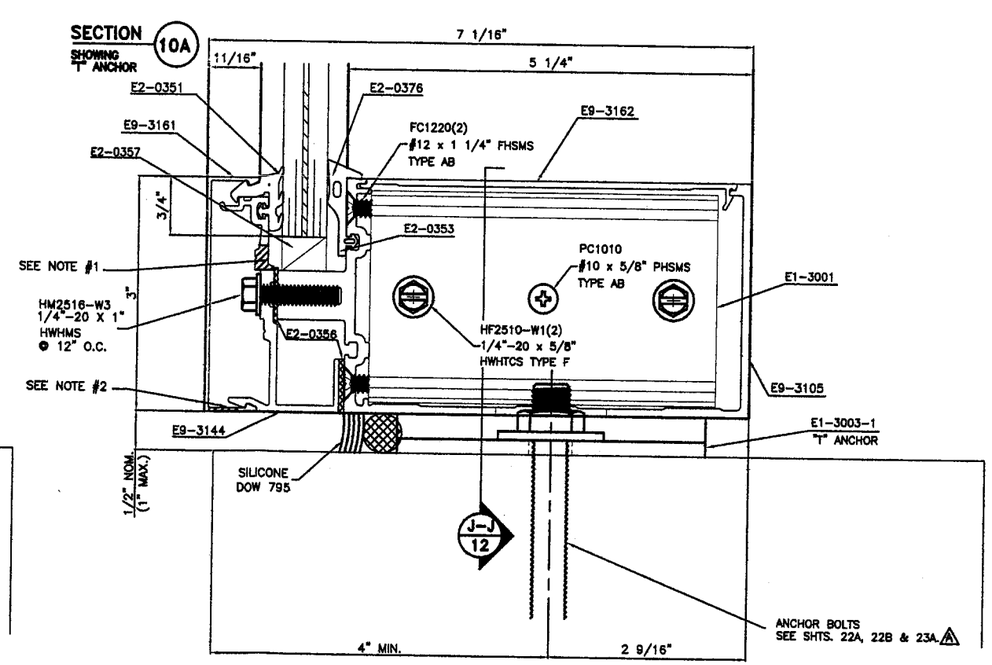

NOTE:
1. 5/16" DIA. WEEPHOLE. (3)/HORIZ. LOCATED (1) @ 3" FROM EACH END & (1) @ MID-SPAN.
2. 5/16" DIA. WEEPHOLE. (2)/HORIZ. LOCATED @ 1/3 D.L.O. FROM ENDS.

WALTER A. TILLIT JR., P.E.
STRUCTURAL ENGINEER
FL. LIC.NO. 44167

APR 12 2006

TILLECO INC.
TILLIT TESTING & ENGINEERING COMPANY
6355 NW 36th STREET, STE. 305
MIAMI, FLORIDA 33166
FL E.B. LICENSE No. 0006719

PRODUCT REVISED
as complying with the Florida Building Code
Acceptance No. 06-0306.03
Expiration Date 03/04/11
By
Miami-Dade Product Control Division

RESERVED FOR METRO-DADE USE ONLY

YKK AP AMERICA, INC.
5630 GWALTNEY DRIVE
ATLANTA, GEORGIA 30336

SYSTEM	SCALE
YHC 300 SINGLE GLAZING SYSTEM	1/2
DESCRIPTION: SILL DETAILS	
DRAWING NUMBER: YHC-300-OG-SS	REV. A

APPROVED BY	DRAWN BY	DATE	SHEET NO.
JIA	RTB	2/06/06	7 OF 24

G:\SYSDWGS\YHC3000G\DADE\SINGLE\SMALLMISSILE\YHC300p07ss.DWG

REV.	DESCRIPTION	BY	DATE
A	SECTIONS 11, 12.	LA	2/28/06
B	DOORS/STOREFRONTS DASHED LINES	L.G.	4/7/06

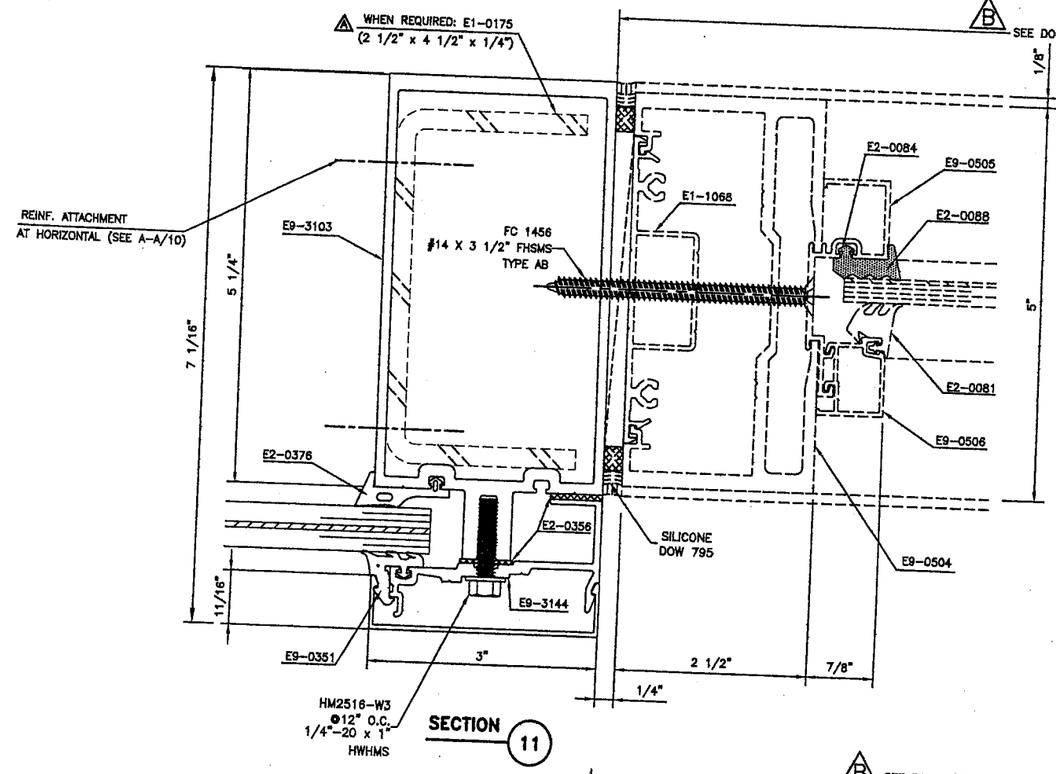

SECTION 11

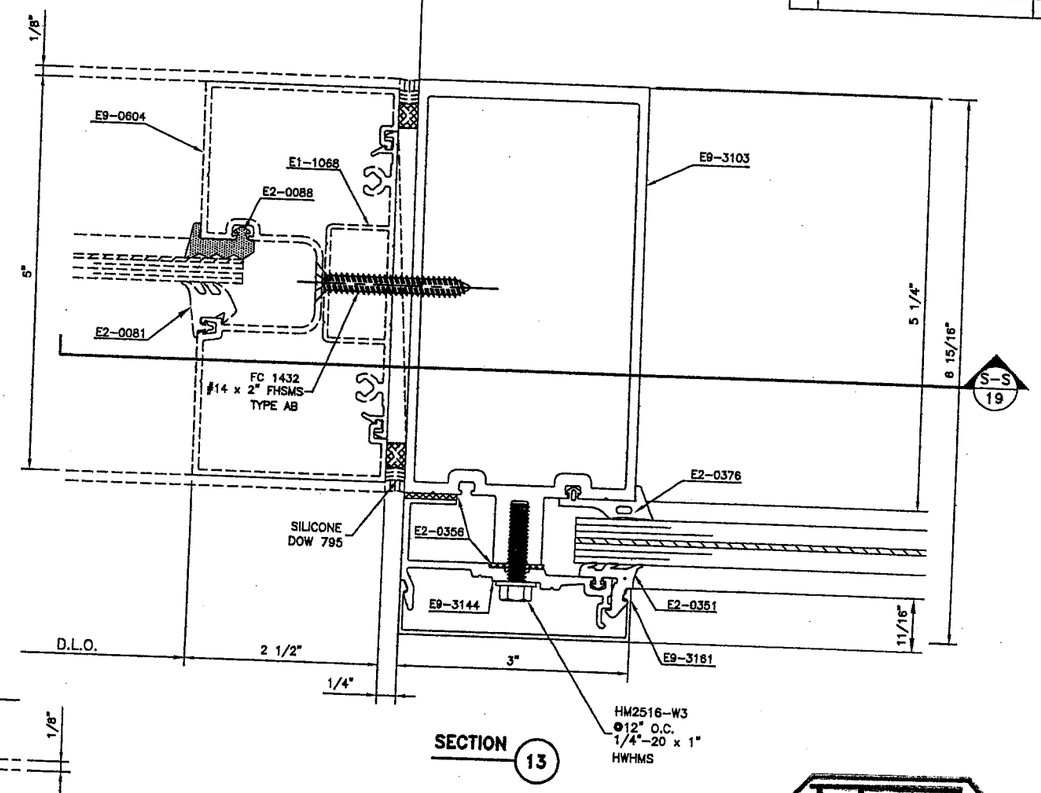

SECTION 13

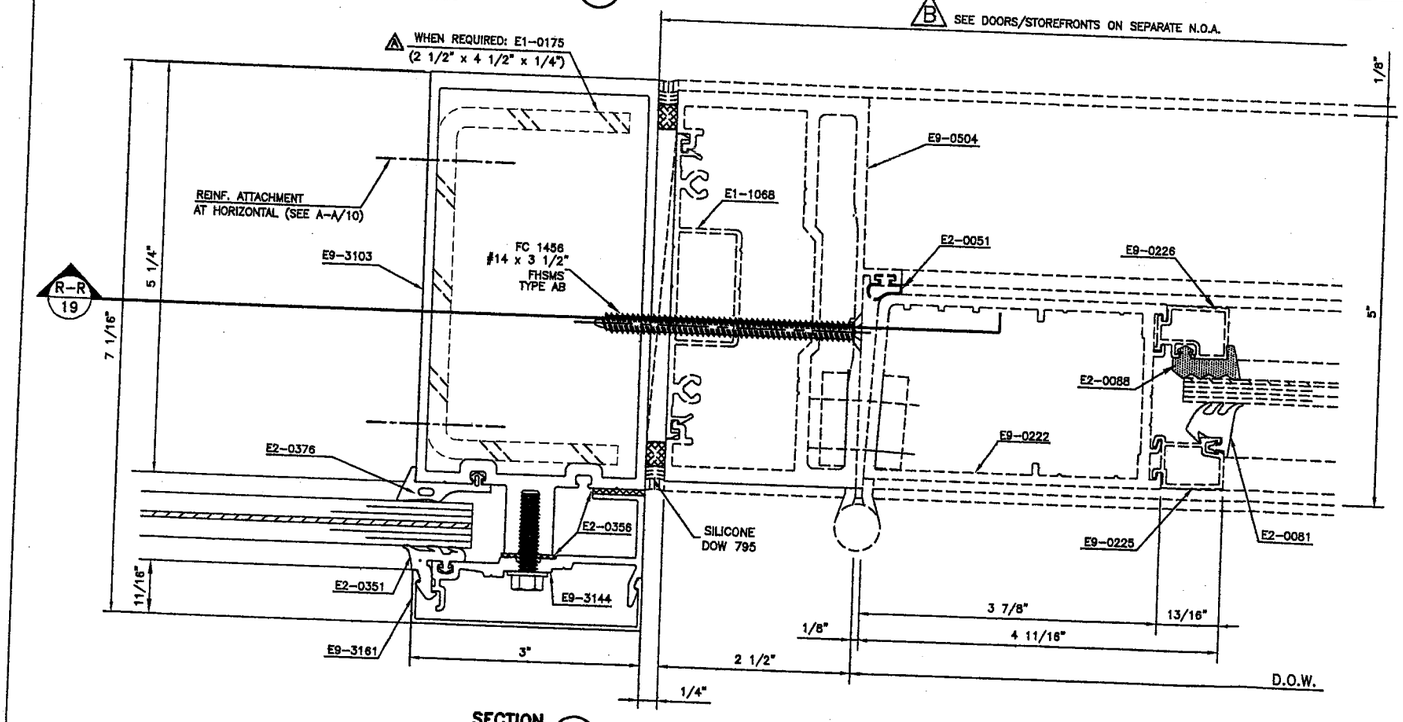

SECTION 12

SEE DETAIL OF DOOR AND STOREFRONT IN THE CORRESPONDING NOTICE OF ACCEPTANCE

WALTER A. TILLIT JR., P.E.
STRUCTURAL ENGINEER
FL. LIC.NO. 44167

APR 12 2006

TILTECO INC.

TILLIT TESTING & ENGINEERING COMPANY
6355 NW 36th STREET, STE. 305
MIAMI, FLORIDA 33166
FL E.B. LICENSE No. 0006719

PRODUCT REVISED
as complying with the Florida Building Code
Acceptance No 06-0306.03
Expiration Date 03/04/11
By Miami Dade Product Control Division

RESERVED FOR METRO-DADE USE ONLY

YKK AP AMERICA, INC.
5630 GWALTNEY DRIVE
ATLANTA, GEORGIA 30336

SYSTEM	SCALE
YHC 300 SINGLE GLAZING SYSTEM	1/2
DESCRIPTION: STOREFRONT AND DOOR DETAILS	
DRAWING NUMBER: YHC-300-OG-SS	REV. A

APPROVED BY	DRAWN BY	DATE	SHEET NO.
JIA	RTB	8/5/02	8 OF 24

G:\SYSDWGS\YHC300OG\DADE\SINGLE\SMALLMISSILE\YHC300p08ss.DWG

REV.	DESCRIPTION	BY	DATE
A	SECTIONS 15 & 16	I.A	2/28/06
B	DOORS/STOREFRONTS DASHED LINES	L.G.	4/7/06

NOTE:

1. 5/16" DIA. WEEPHOLE. (3)/HORIZ. LOCATED (1) @ 3" FROM EACH END & (1) @ MID-SPAN.
2. 5/16" DIA. WEEPHOLE. (2)/HORIZ. LOCATED @ 1/3 D.L.O. FROM ENDS.

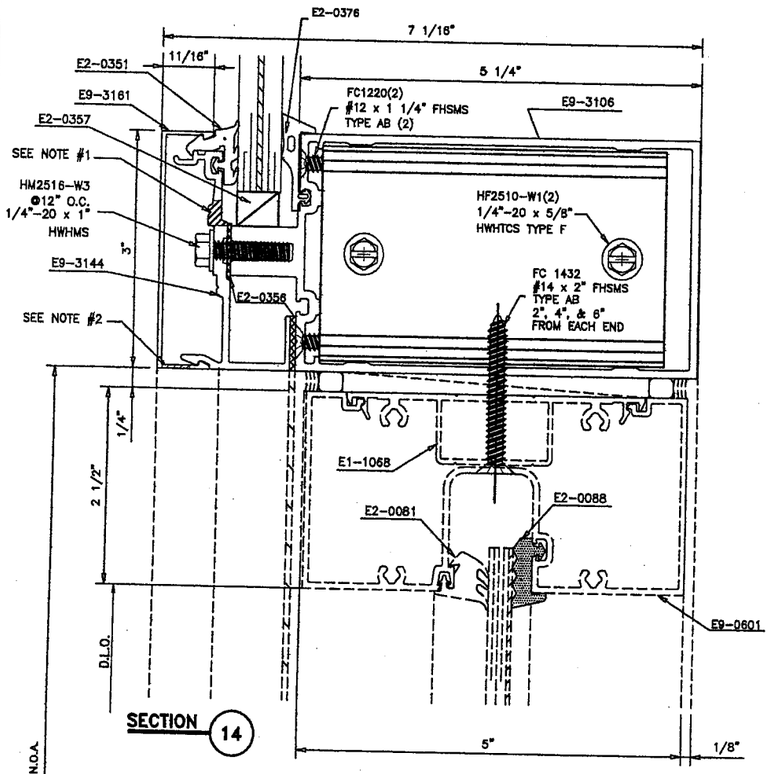

SECTION 14

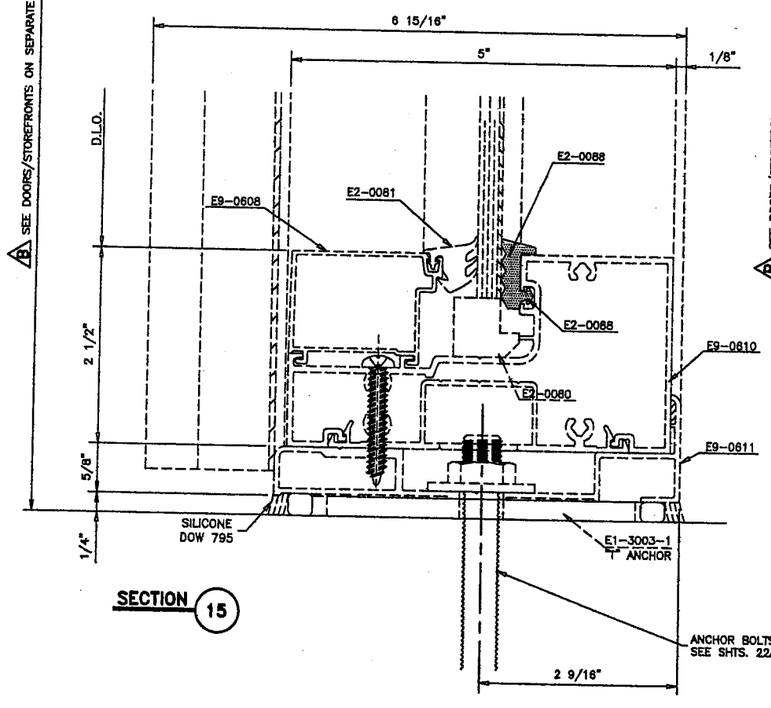

SECTION 15

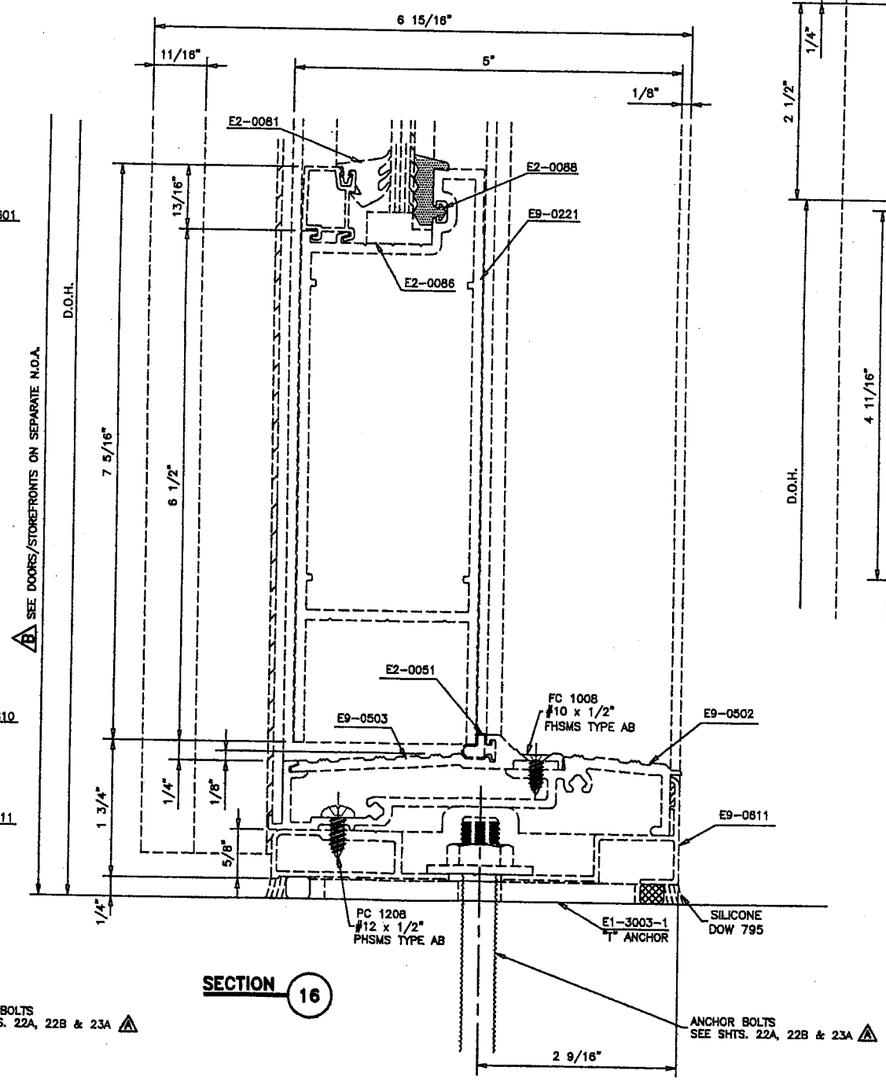

SECTION 16

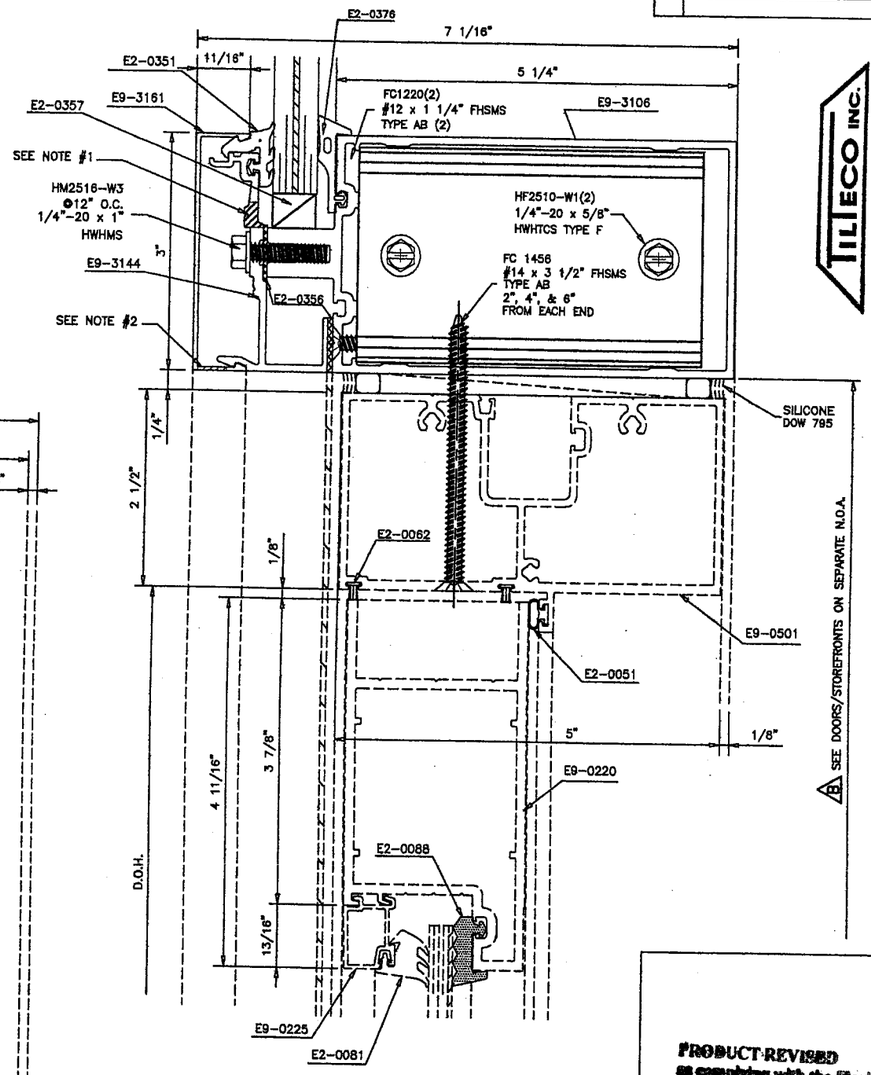

SECTION 17

SEE DETAIL OF DOOR AND STOREFRONT IN THE CORRESPONDING NOTICE OF ACCEPTANCE

WALTER A. TILLIT JR., P.E.
STRUCTURAL ENGINEER
FL. LIC.NO. 44167

APR 12 2006

TILLIT TESTING & ENGINEERING COMPANY
6355 NW 36th STREET, STE. 305
MIAMI, FLORIDA 33166
FL E.B. LICENSE No. 0006719

PRODUCT REVISED
as complying with the Florida Building Code
Acceptance No. 06-0306.03
Expiration Date 03/04/11
By
Miami-Dade Product Control Division

RESERVED FOR METRO-DADE USE ONLY

YKK ap America
YKK AP AMERICA, INC.
5630 GWALTNEY DRIVE
ATLANTA, GEORGIA 30336

SYSTEM	SCALE
YHC 300 SINGLE GLAZING SYSTEM	1/2

DESCRIPTION: STOREFRONT AND DOOR DETAILS

DRAWING NUMBER	REV.
YHC-300-OG-SS	A

APPROVED BY	DRAWN BY	DATE	SHEET NO.
JIA	RTB	8/5/02	9 OF 24

G:\SYSDWGS\YHC300OG\DADE\SINGLE\SMALLMISSILE\YHC300p09ss.DWG

REV.	DESCRIPTION	BY	DATE
A	SECTION A.	I.A	2/28/06

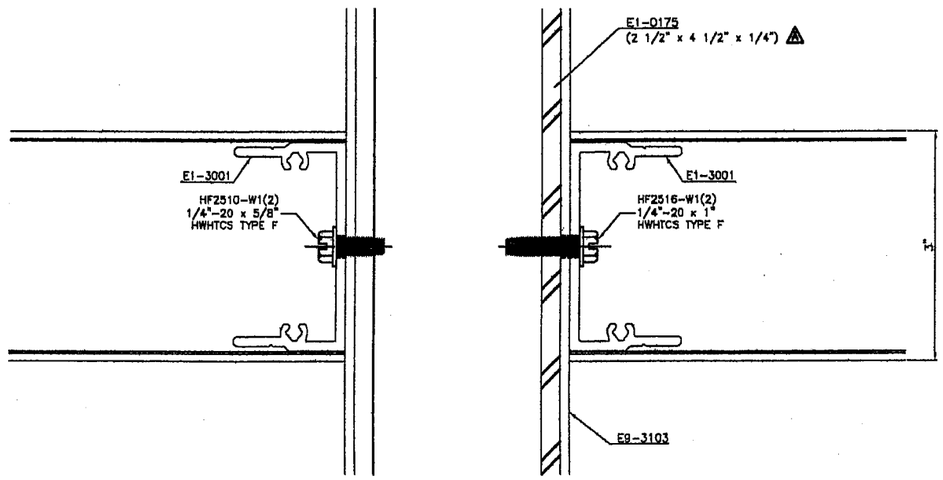

SECTION A-A

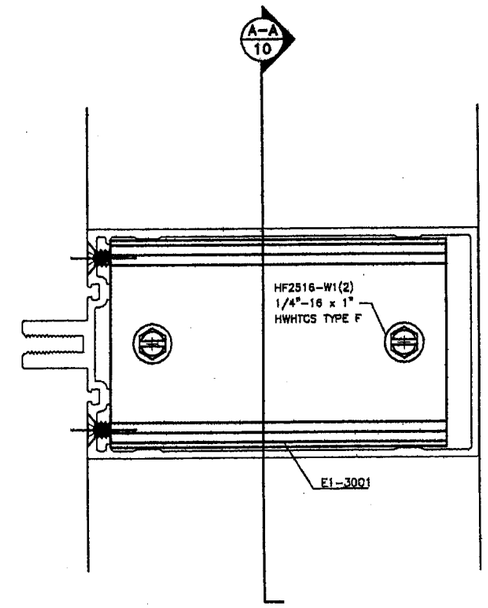

SECTION
CONNECTION "HORIZ.-VERT. W/REINF."

TILTECO INC.

TILLIT TESTING & ENGINEERING COMPANY
6355 NW 36th STREET, STE. 305
MIAMI, FLORIDA 33166
FL E.B. LICENSE No. 0006719

PRODUCT REVISED
as complying with the Florida
Building Code
Acceptance No. 06-0306.03
Expiration Date 03/04/11
By
Miami Dade Product Control
Division

RESERVED FOR METRO-DADE USE ONLY

YKK AP America

YKK AP AMERICA, INC.
5630 GWALTNEY DRIVE
ATLANTA, GEORGIA 30336

SYSTEM	SCALE
YHC 300 SINGLE GLAZING SYSTEM	1/2

DESCRIPTION: INTERMEDIATE DETAILS

DRAWING NUMBER	REV.
YHC-300-OG-SS	A

APPROVED BY	DRAWN BY	DATE	SHEET NO.
JIA	RTB	8/5/02	10 OF 24

WALTER A. TILLIT JR., P.E.
STRUCTURAL ENGINEER
FL. LIC.NO. 44167

APR 12 2006

G:\SYSDWGS\YHC300OG\DADE\SINGLE\SMALLMISSILE\YHC300p10ss.DWG

REV.	DESCRIPTION	BY	DATE
A	SECTIONS B, C & E.	I.A	2/28/06

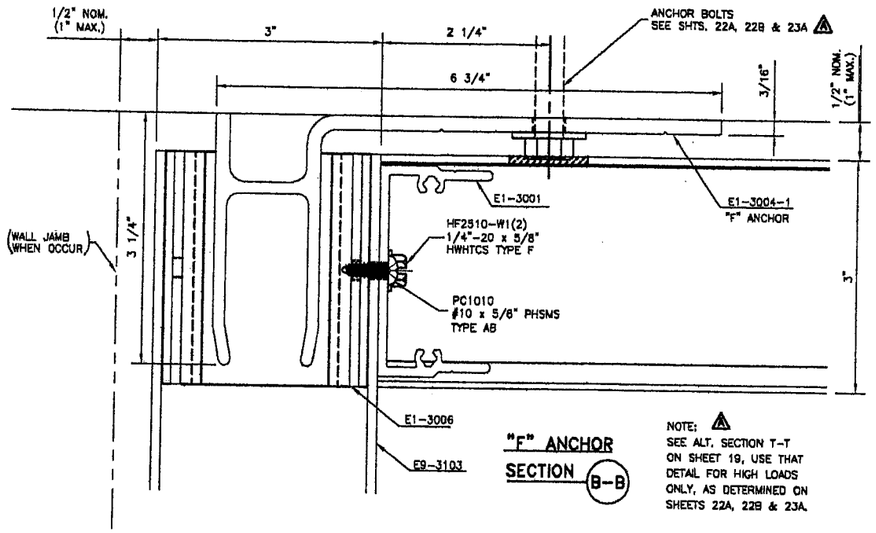

"F" ANCHOR SECTION B-B

NOTE: 3
SEE ALT. SECTION T-T ON SHEET 19, USE THAT DETAIL FOR HIGH LOADS ONLY, AS DETERMINED ON SHEETS 22A, 22B & 23A.

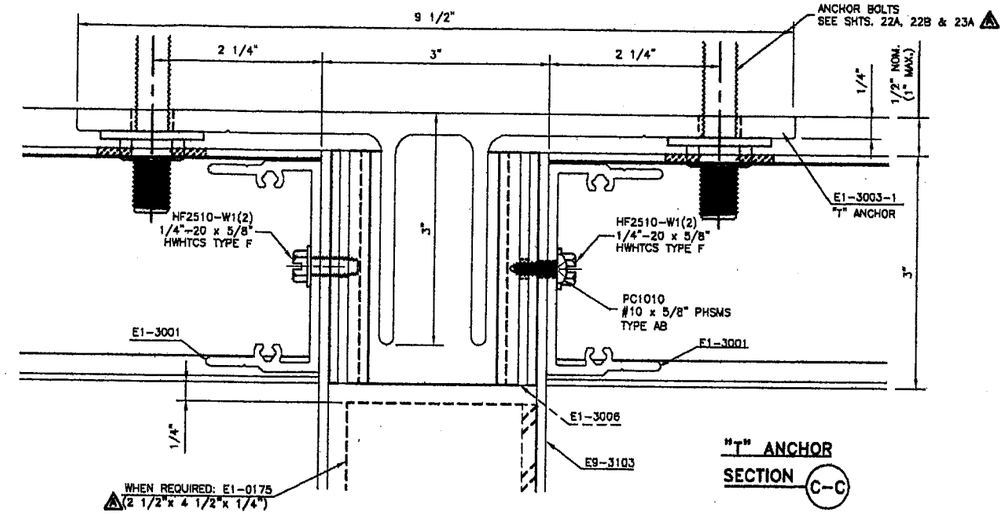

"T" ANCHOR SECTION C-C

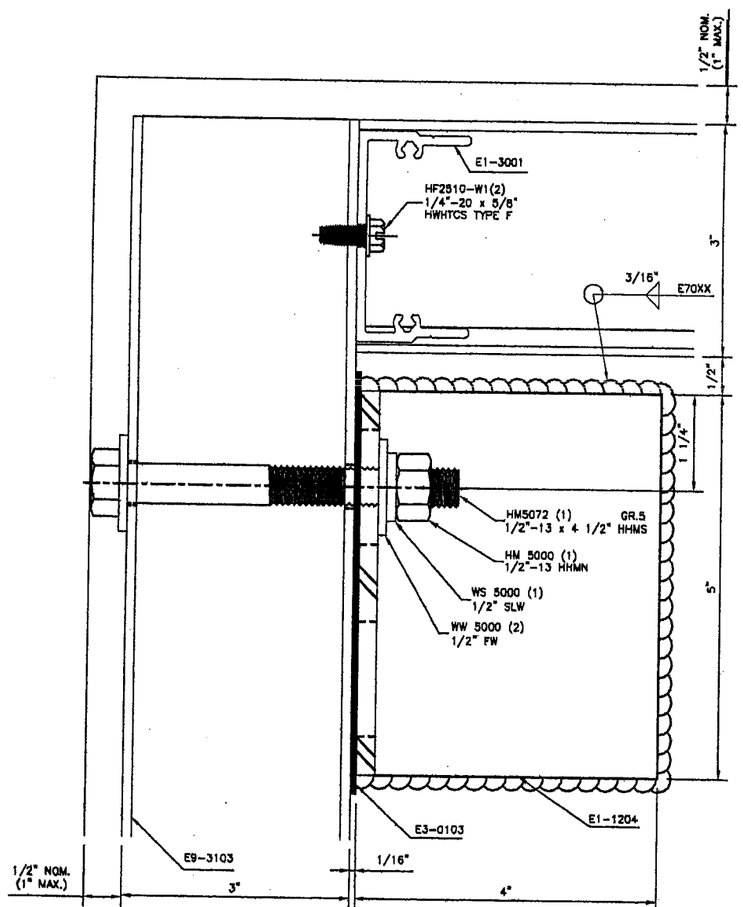

ANCHOR CLIP SECTION D-D
JAMB

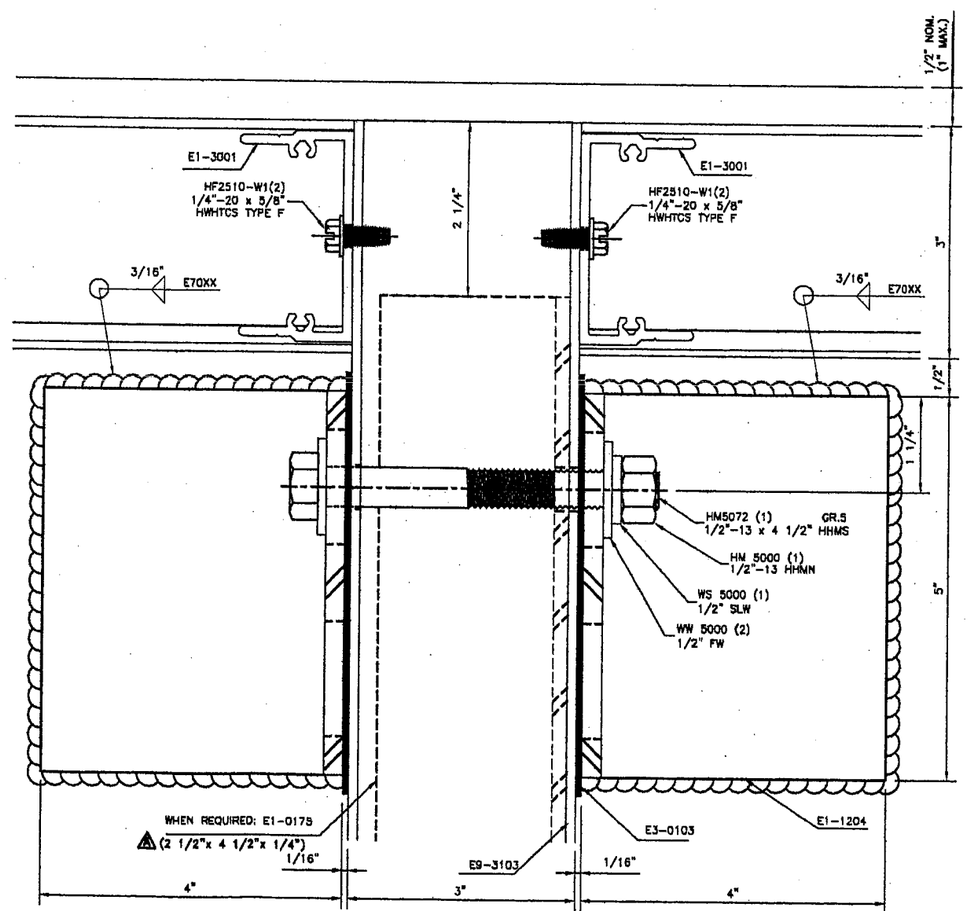

ANCHOR CLIP SECTION E-E
MULL.

TILLECO INC.

TILLIT TESTING & ENGINEERING COMPANY
6355 NW 36th STREET, STE. 305
MIAMI, FLORIDA 33166
FL E.B. LICENSE No. 0006719

WALTER A. TILLIT JR., P.E.
STRUCTURAL ENGINEER
FL. LIC.NO. 44167

APR 12 2006

PRODUCT REVISED
as complying with the Florida Building Code
Acceptance No. 06-0306.03
Expiration Date: 03/04/11
By
Miami Dade Product Control Division

RESERVED FOR METRO-DADE USE ONLY

YKK AP America
YKK AP AMERICA, INC.
5630 GWALTNEY DRIVE
ATLANTA, GEORGIA 30336

SYSTEM	SCALE
YHC 300 SINGLE GLAZING SYSTEM	1/2

DESCRIPTION: HEAD ANCHOR DETAILS

DRAWING NUMBER	REV.
YHC-300-OG-SS	A

APPROVED BY	DRAWN BY	DATE	SHEET NO.
JIA	RTB	8/5/02	11 OF 24

G:\SYSDWGS\YHC300OG\DADE\SINGLE\SMALLMISSILE\YHC300p11ss.DWG

REV.	DESCRIPTION	BY	DATE
A	SECTIONS F, G, H, & J.	I.A.	2/28/06

"J" ANCHOR SECTION F-F

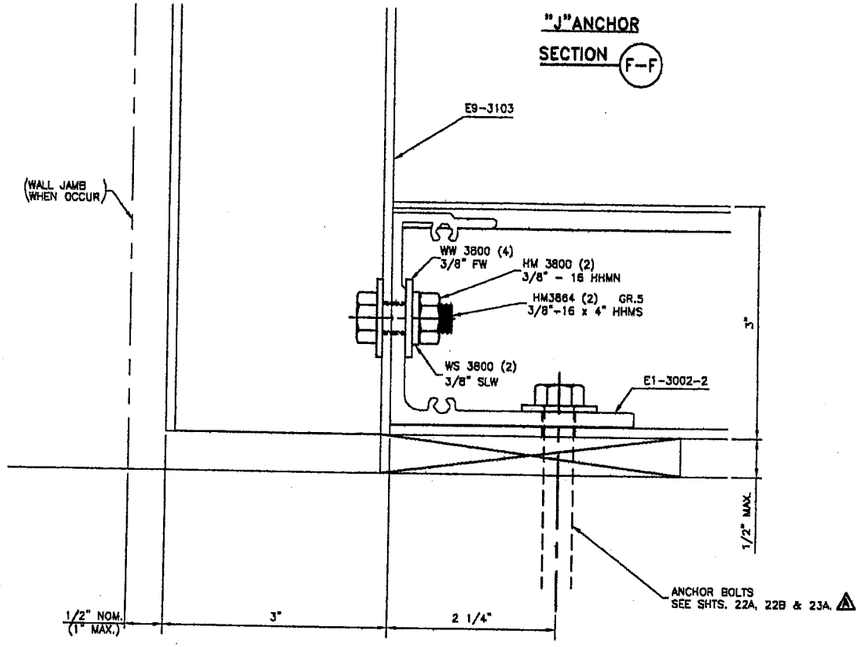

"J" ANCHOR SECTION G-G

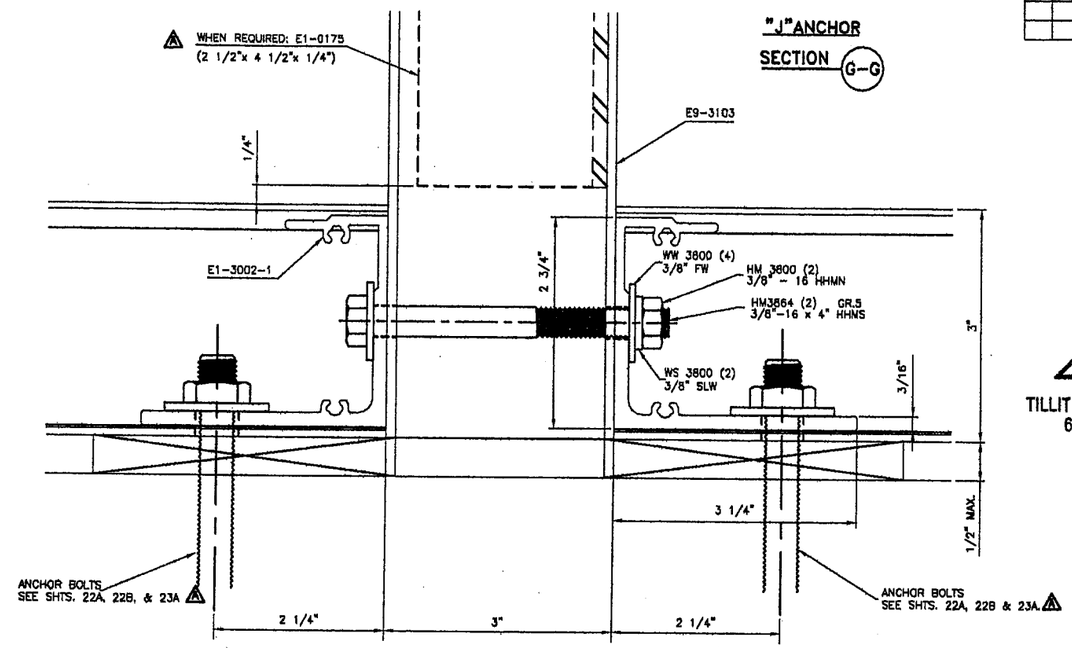

NOTE: ⚠ SEE ALT. SECTION U-U ON SHEET 19, USE THAT DETAIL FOR HIGH LOADS ONLY, AS DETERMINED ON SHEETS 22A, 22B & 23A.

"F" ANCHOR SECTION H-H

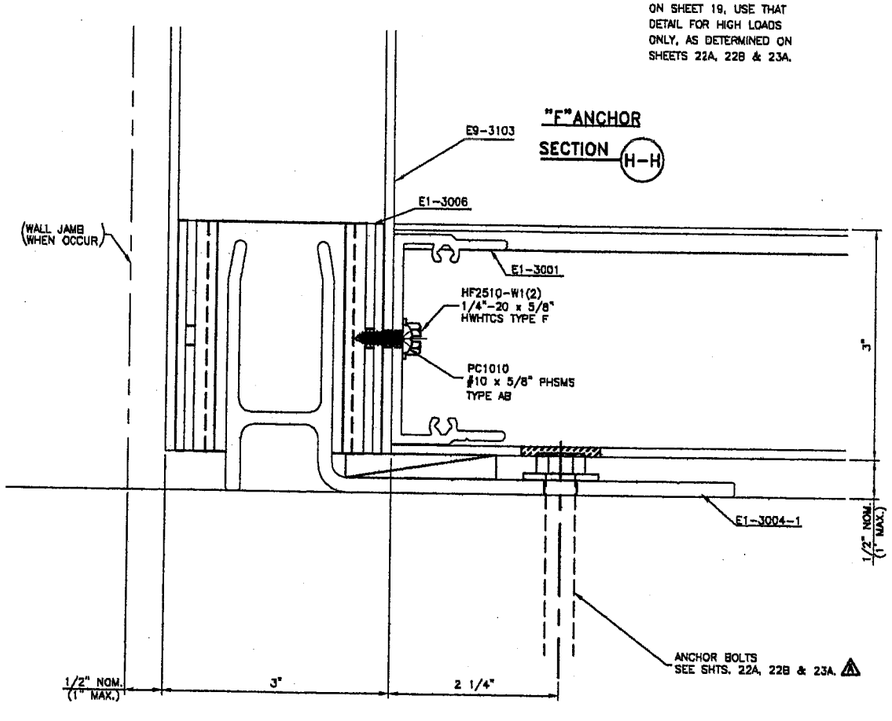

"T" ANCHOR SECTION J-J

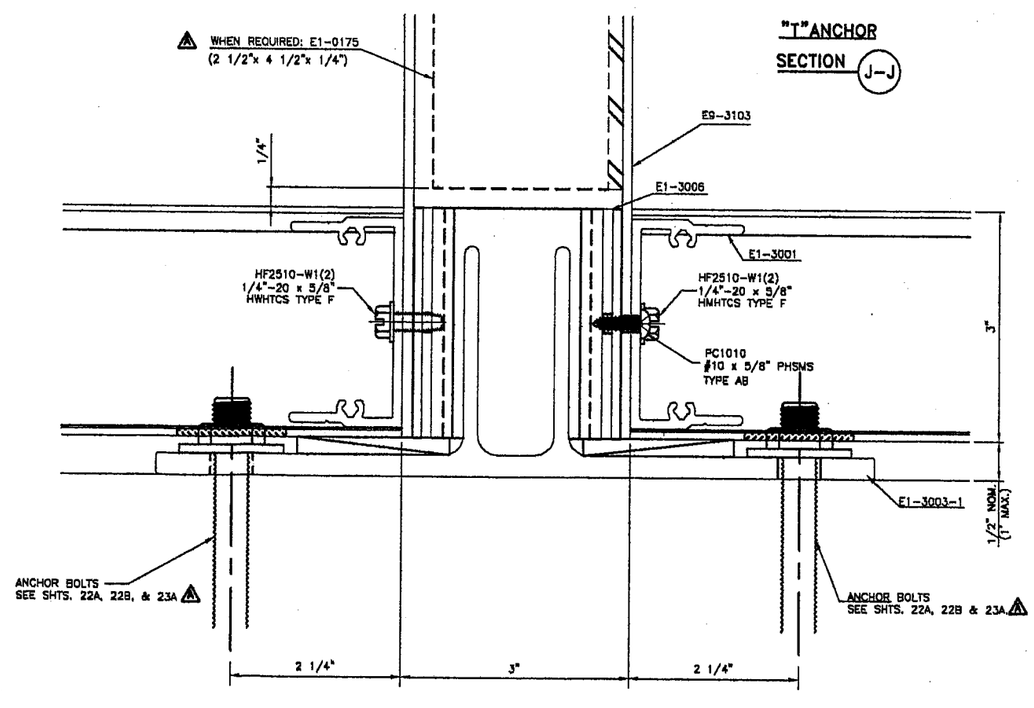

TILTECO INC.
TILLIT TESTING & ENGINEERING COMPANY
6355 NW 36th STREET, STE. 305
MIAMI, FLORIDA 33166
FL E.B. LICENSE No. 0006719

WALTER A. TILLIT JR., P.E.
STRUCTURAL ENGINEER
FL. LIC.NO. 44167

APR 12 2006

PRODUCT REVISED
as complying with the Florida Building Code
Acceptance No 06-0306.03
Expiration Date 03/04/11
By
Miami Dade Product Control Division

RESERVED FOR METRO-DADE USE ONLY

YKK AP America
YKK AP AMERICA, INC.
5630 GWALTNEY DRIVE
ATLANTA, GEORGIA 30336

SYSTEM	SCALE
YHC 300 SINGLE GLAZING SYSTEM	1/2

DESCRIPTION: SILL ANCHOR DETAILS

DRAWING NUMBER	REV.
YHC-300-OG-SS	A

APPROVED BY	DRAWN BY	DATE	SHEET NO.
JIA	RTB	8/5/02	12 OF 24

G:\SYSDWGS\YHC300OG\DADE\SINGLE\SMALLMISSILE\YHC300p12ss.DWG

REV.	DESCRIPTION	BY	DATE
A	NO CHANGE THIS SHEET	JIA	2/6/06
B	MINIMUM SPACING REQ'D.	C.V.	4/24/06

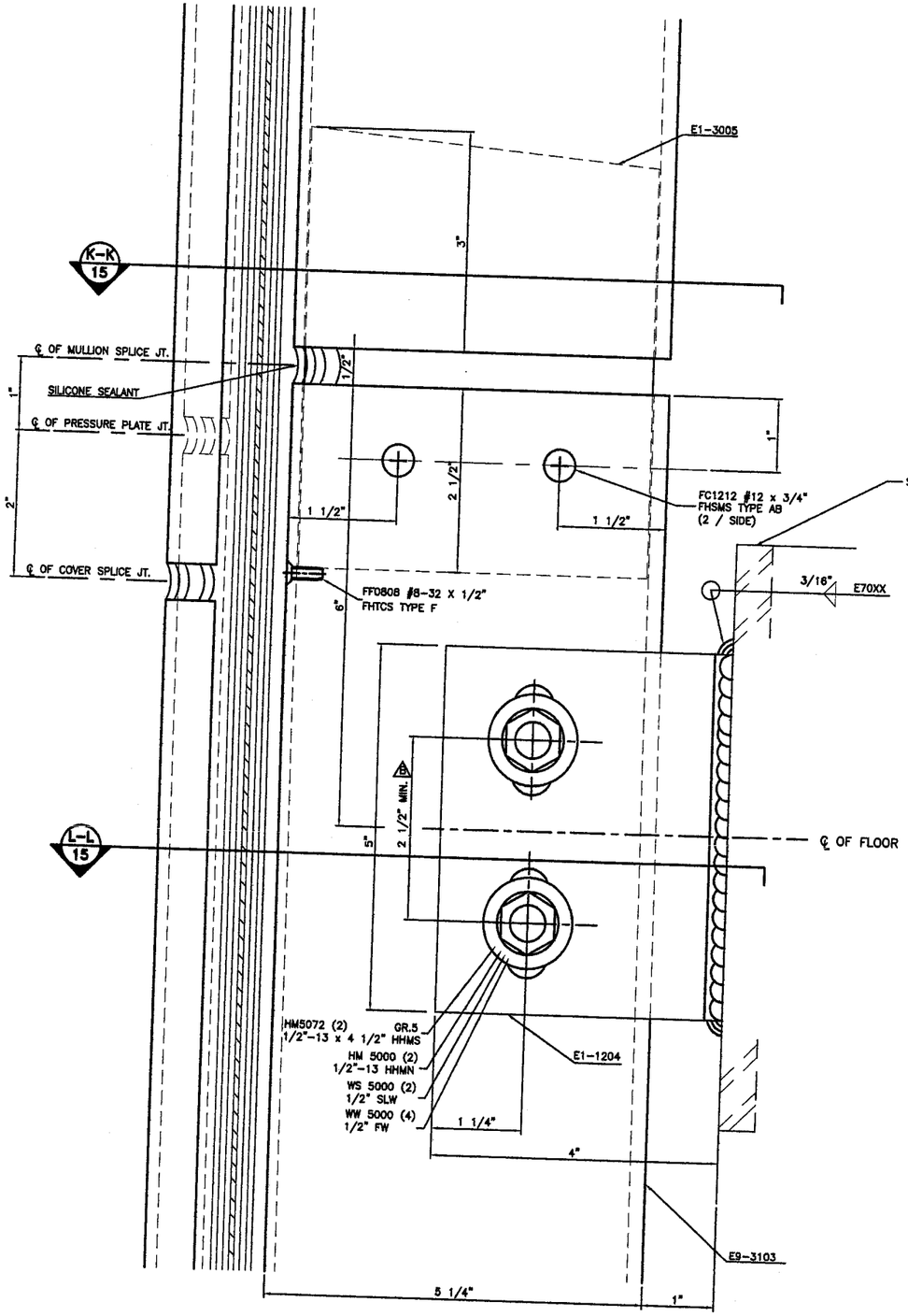

SPLICE & WINDLOAD ANCHOR CLIP

DETAIL 51
JAMB

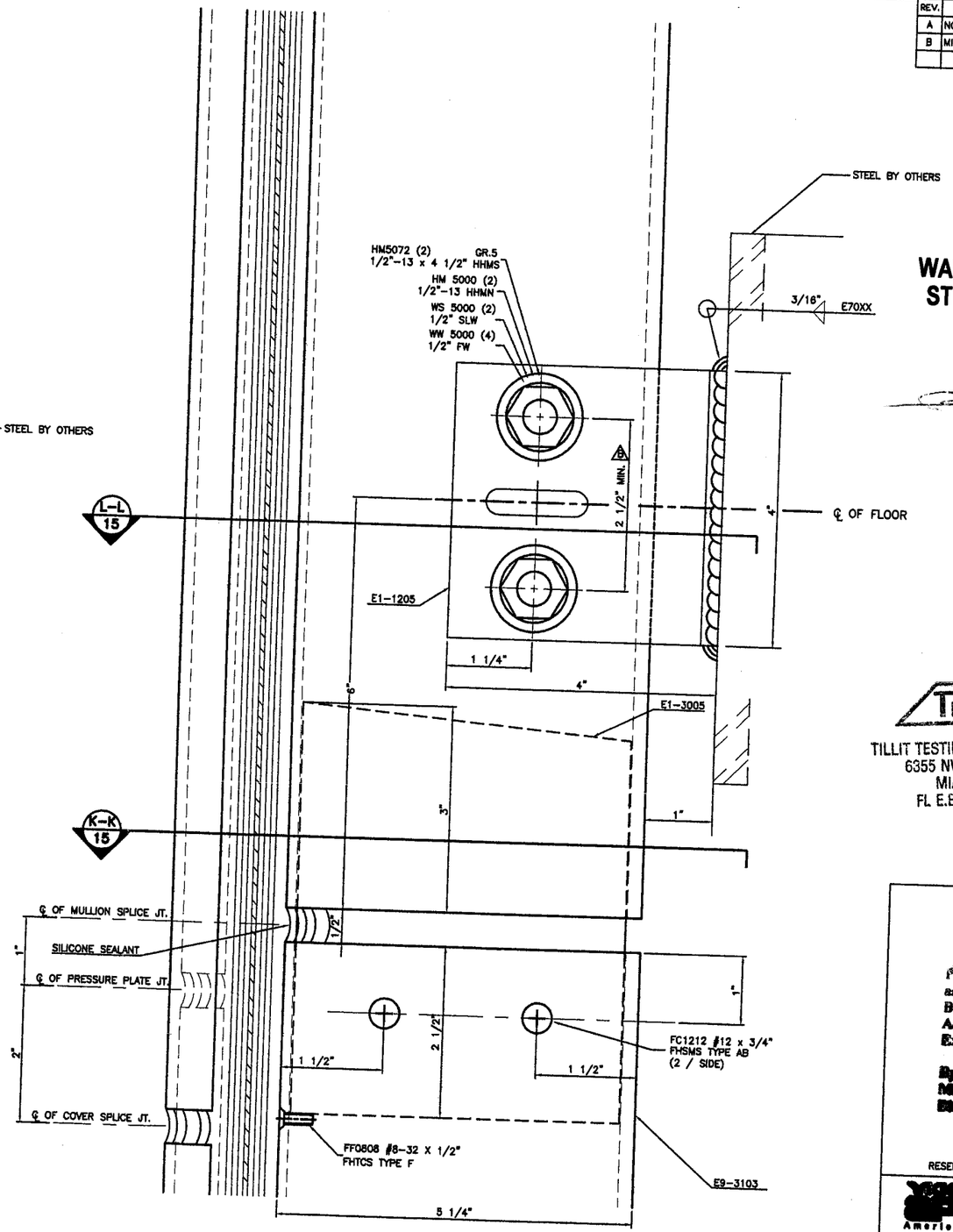

SPLICE & DEADLOAD ANCHOR CLIP

DETAIL 51A
JAMB

WALTER A. TILLIT JR., P.E.
STRUCTURAL ENGINEER
FL. LIC.NO. 44167

APR 12 2006

TILECO INC.

TILLIT TESTING & ENGINEERING COMPANY
6355 NW 36th STREET, STE. 305
MIAMI, FLORIDA 33166
FL E.B. LICENSE No. 0006719

PRODUCT REVISED
as complying with the Florida
Building Code
Acceptance No 06-0306.03
Expiration Date 03/09/11
By
Miami Dade Product Control
Division

RESERVED FOR METRO-DADE USE ONLY

YKK AP AMERICA, INC.
5630 GWALTNEY DRIVE
ATLANTA, GEORGIA 30336

SYSTEM	SCALE
YHC 300 SINGLE GLAZING SYSTEM	1/2

DESCRIPTION: SPLICE AND ANCHOR CLIP DETAILS

DRAWING NUMBER	REV.
YHC-300-OG-SS	A

APPROVED BY	DRAWN BY	DATE	SHEET NO.
JIA	RTB	8/5/02	13 OF 24

G:\SYSDWGS\YHC3000G\DADE\SINGLE\SMALLMISSILE\YHC300p13ss.DWG

REV.	DESCRIPTION	BY	DATE
A	DETAILS 52, & 52A	I.A	3/01/06
B	MINIMUN SPACING REQ'D.	C.V.	4/24/06

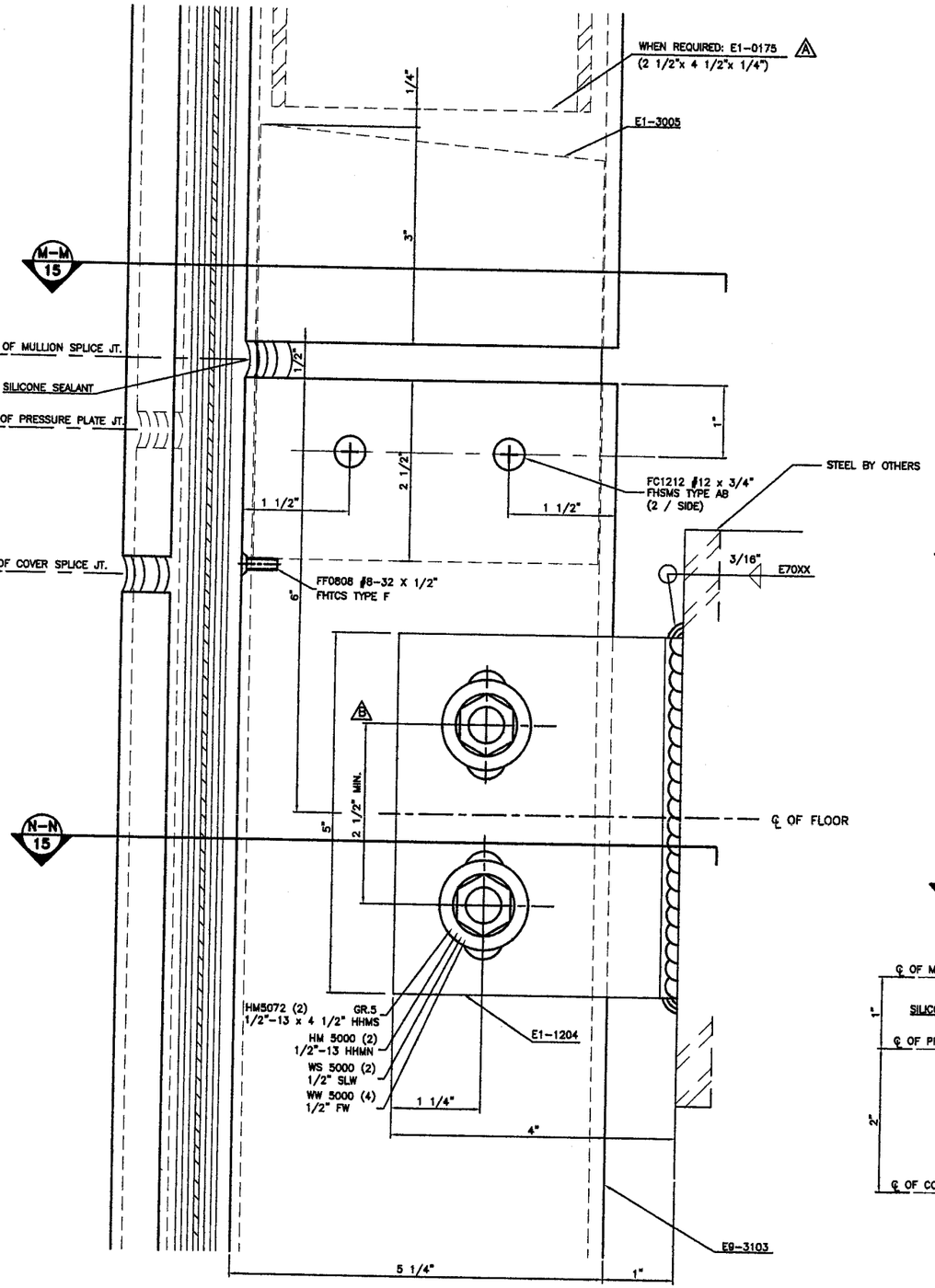

SPLICE & WINDLOAD ANCHOR CLIP

DETAIL 52
● MULL.

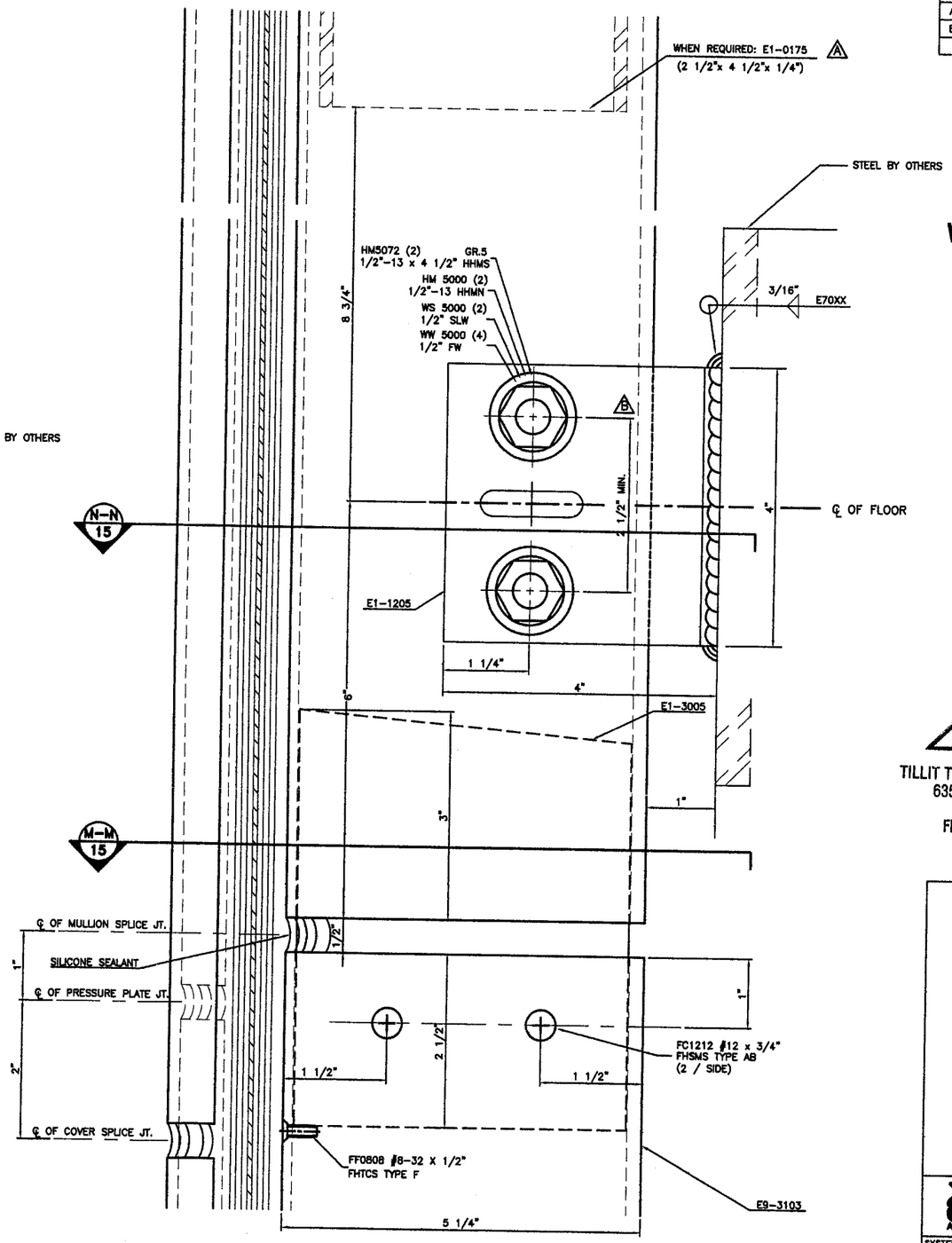

SPLICE & DEADLOAD ANCHOR CLIP

DETAIL 52A
● MJLL.

WALTER A. TILLIT JR., P.E.
STRUCTURAL ENGINEER
FL. LIC.NO. 44167

APR 12 2006

TILLECO INC.

TILLIT TESTING & ENGINEERING COMPANY
6355 NW 36th STREET, STE. 305
MIAMI, FLORIDA 33166
FL E.B. LICENSE No. 0006719

PRODUCT REVIEWED
as complying with the Florida
Building Code
Acceptance No. 06-0306.03
Expiration Date 03/04/11
By
Miami-Dade Product Control
Division

RESERVED FOR METRO-DADE USE ONLY

YKK AP AMERICA, INC.
5630 GWALTNEY DRIVE
ATLANTA, GEORGIA 30336

SYSTEM	SCALE
YHC 300 SINGLE GLAZING SYSTEM	1/2
DESCRIPTION: SPLICE AND ANCHOR CLIP DETAILS	
DRAWING NUMBER: YHC-300-OG-SS	REV. A

APPROVED BY	DRAWN BY	DATE	SHEET NO.
JIA	RTB	8/5/02	14 OF 24

G:\SYSDWGS\YHC300OG\DADE\SINGLE\SMALLMISSILE\YHC300p14ss.DWG

REV.	DESCRIPTION	BY	DATE
A	NO CHANGE THIS SHEET	JIA	2/6/06

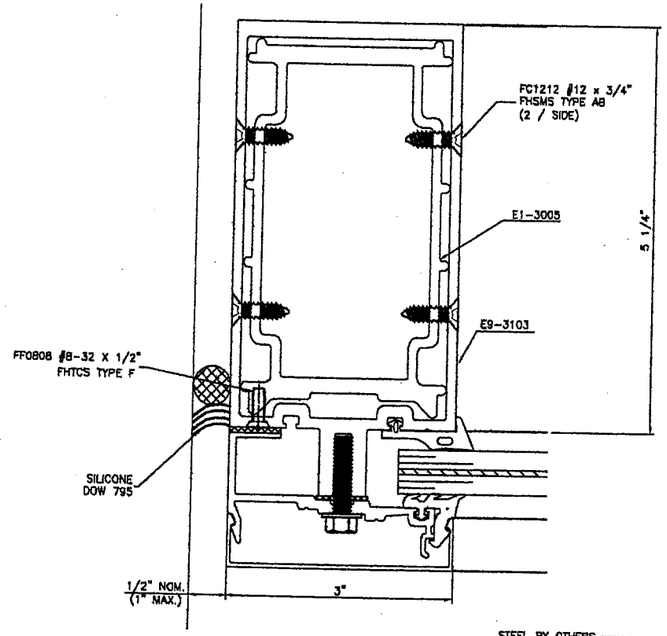

SECTION K-K
JAMB

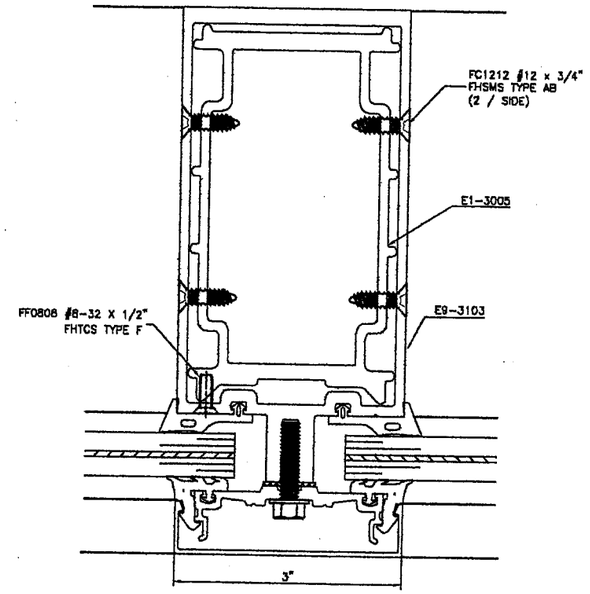

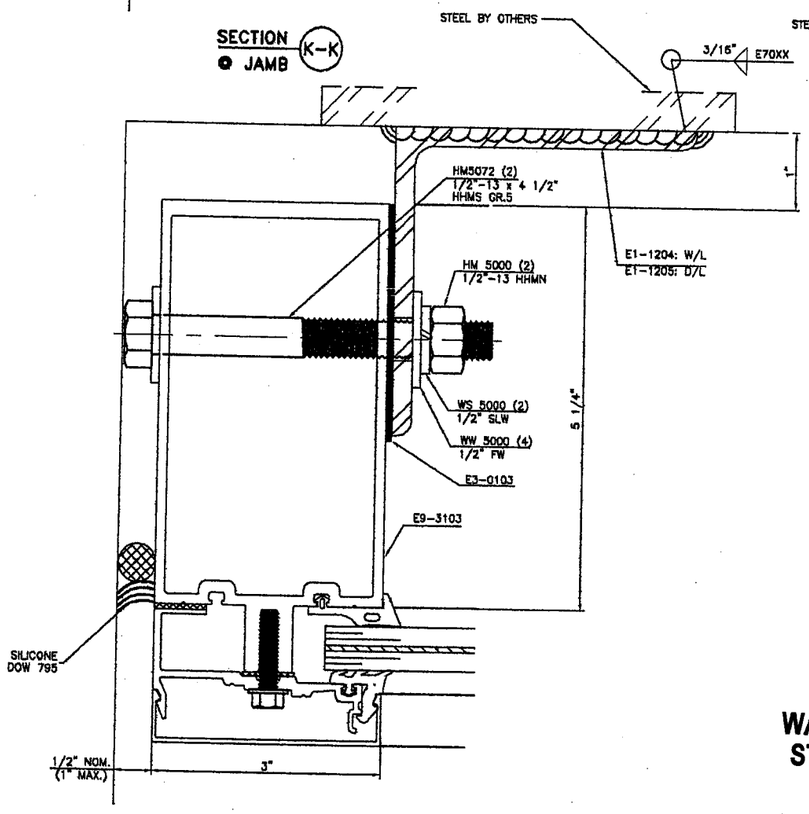

SECTION L-L
JAMB

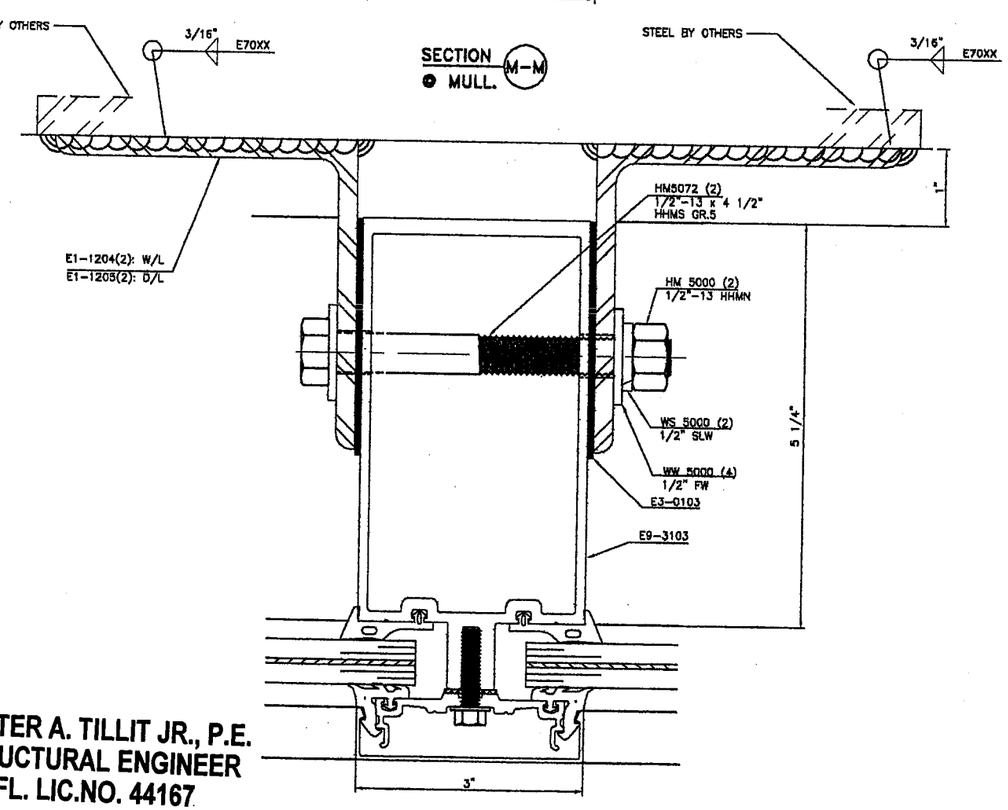

SECTION M-M
MULL.

SECTION N-N
MULL.

WALTER A. TILLIT JR., P.E.
STRUCTURAL ENGINEER
FL. LIC.NO. 44167

APR 12 2006

TILTECO INC.

TILLIT TESTING & ENGINEERING COMPANY
6355 NW 36th STREET, STE. 305
MIAMI, FLORIDA 33166
FL E.B. LICENSE No. 0006719

PRODUCT REVISED
as complying with the Florida
Building Code
Acceptance No. 06-0306.03
Expiration Date 03/04/11
By
Miami-Dade Product Control
Division

RESERVED FOR METRO-DADE USE ONLY

YKK AP America

YKK AP AMERICA, INC.
5630 GWALTNEY DRIVE
ATLANTA, GEORGIA 30336

SYSTEM	SCALE
YHC 300 SINGLE GLAZING SYSTEM	1/2

DESCRIPTION
SPLICE AND ANCHOR CLIP DETAILS

DRAWING NUMBER	REV.
YHC-300-OG-SS	A

APPROVED BY	DRAWN BY	DATE	SHEET NO.
JIA	RTB	8/5/02	15 OF 24

G:\SYSDWGS\YHC300OG\DADE\SINGLE\SMALLMISSILE\YHC300p15ss.DWG

REV.	DESCRIPTION	BY	DATE
A	NO CHANGE THIS SHEET	JIA	2/6/06

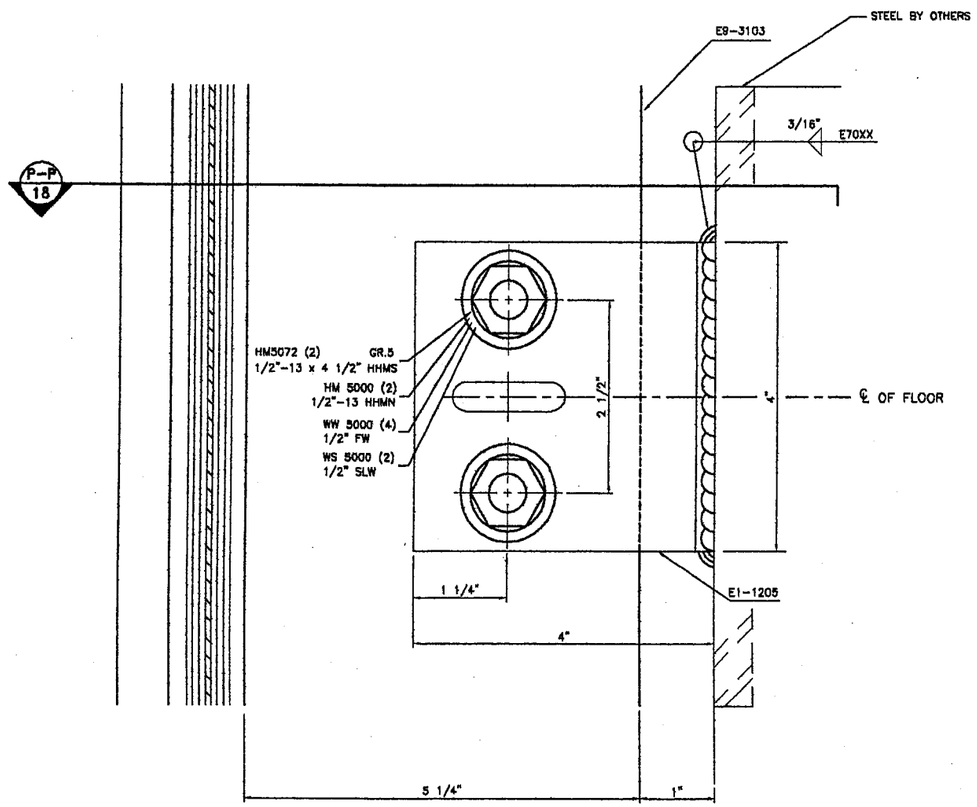

DEADLOAD ANCHOR CLIP

DETAIL 53

JAMB

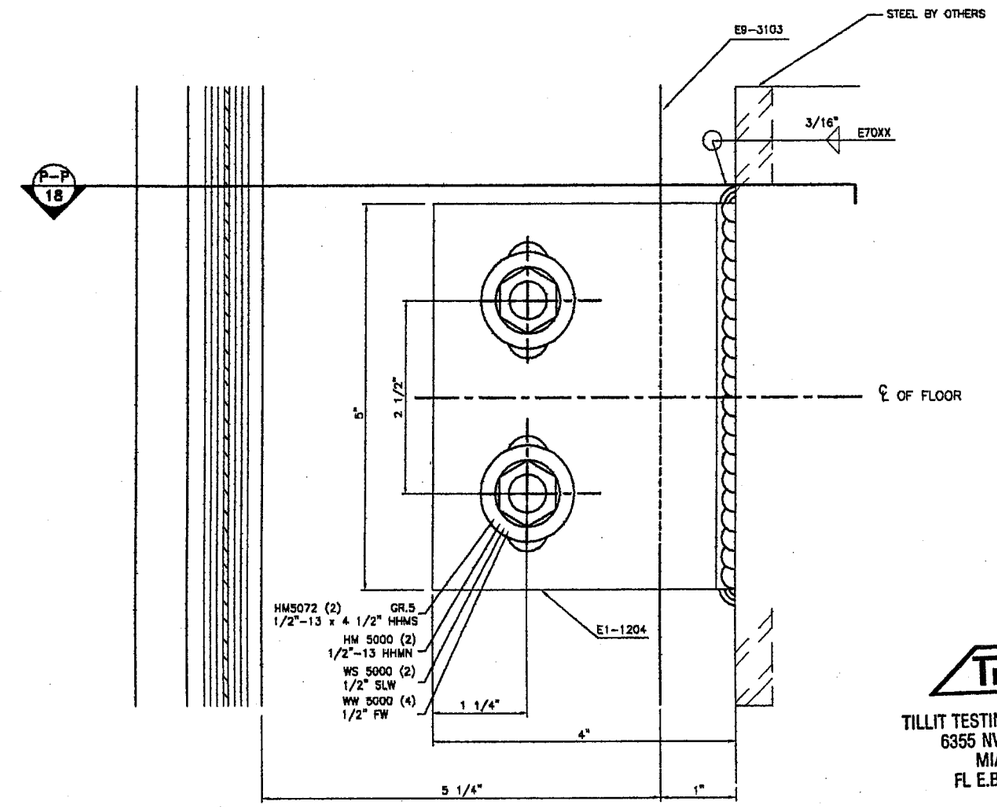

WINDLOAD ANCHOR CLIP

DETAIL 53A

JAMB

TILTECO INC.

TILLIT TESTING & ENGINEERING COMPANY
6355 NW 36th STREET, STE. 305
MIAMI, FLORIDA 33166
FL E.B. LICENSE No. 0006719

PRODUCT REVISED
as complying with the Florida Building Code
Acceptance No. 06-0306.03
Expiration Date 03/04/11
By
Miami Dade Product Control Division

RESERVED FOR METRO-DADE USE ONLY

YKK AP America

YKK AP AMERICA, INC.
5630 GWALTNEY DRIVE
ATLANTA, GEORGIA 30336

SYSTEM	SCALE
YHC 300 SINGLE GLAZING SYSTEM	1/2

DESCRIPTION: MID-ANCHOR CLIP DETAILS

DRAWING NUMBER	REV.
YHC-300-OG-SS	A

APPROVED BY	DRAWN BY	DATE	SHEET NO.
JIA	RTB	8/5/02	16 OF 24

WALTER A. TILLIT JR., P.E.
STRUCTURAL ENGINEER
FL. LIC.NO. 44167

APR 12 2006

G:\SYSDWGS\YHC3000G\DADE\SINGLE\SMALLMISSILE\YHC300p16ss.DWG

REV.	DESCRIPTION	BY	DATE
A	NO CHANGE THIS SHEET	JIA	2/6/06

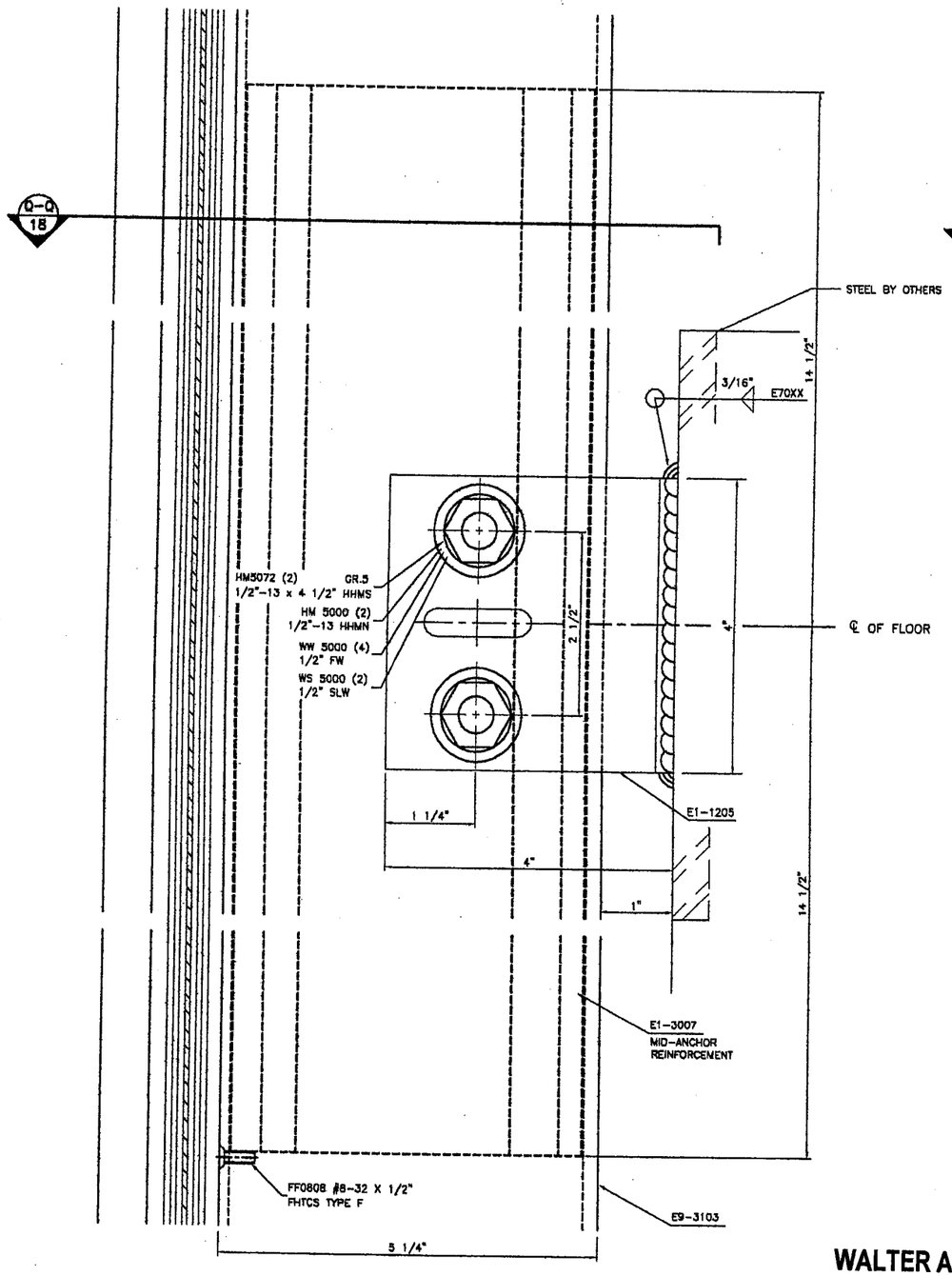

DEADLOAD ANCHOR CLIP

DETAIL 54

● MULL.

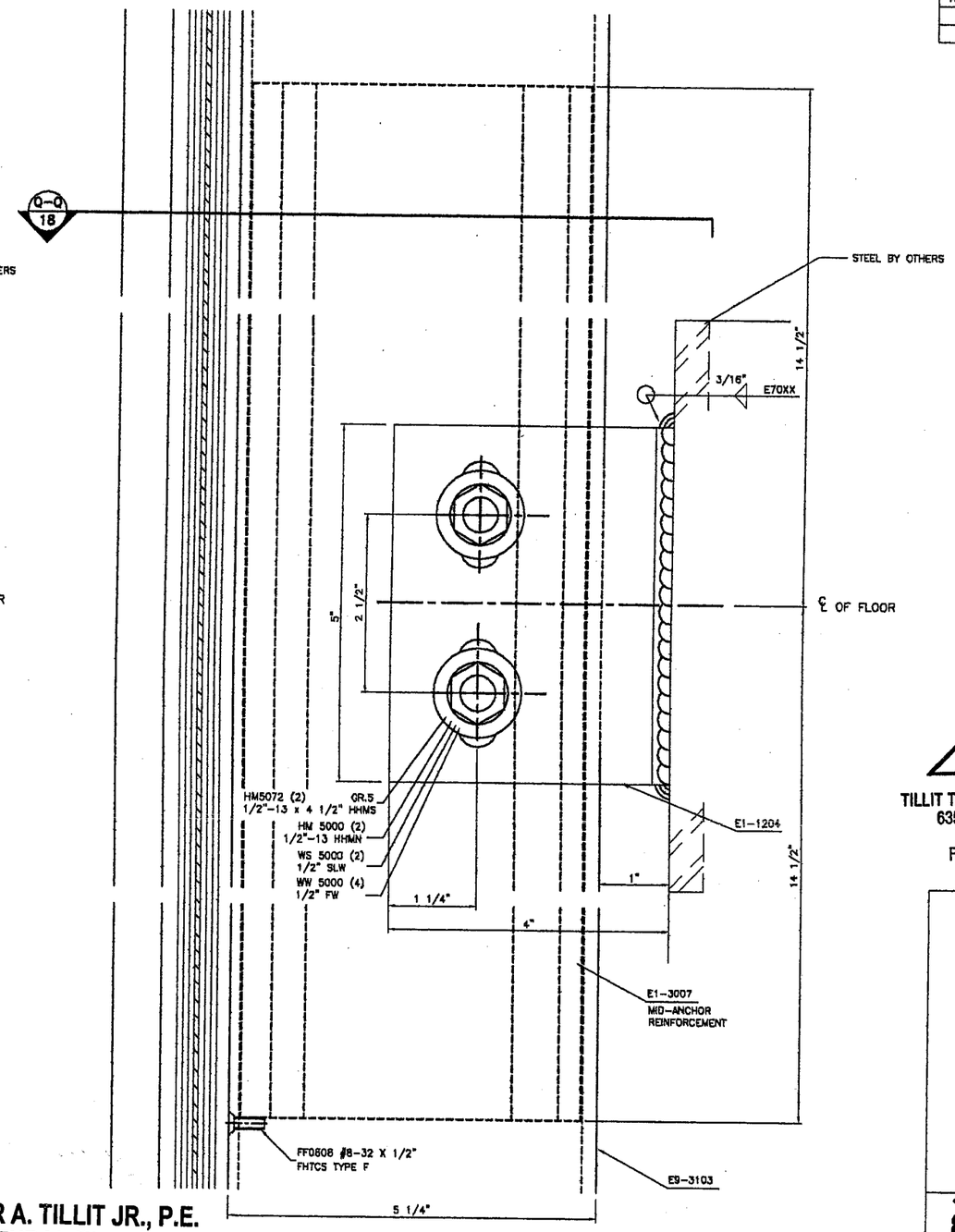

WINDLOAD ANCHOR CLIP

DETAIL 54A

● MULL.

WALTER A. TILLIT JR., P.E.
STRUCTURAL ENGINEER
FL. LIC.NO. 44167

APR 12 2006

TILTECO INC.

TILLIT TESTING & ENGINEERING COMPANY
6355 NW 36th STREET, STE. 305
MIAMI, FLORIDA 33166
FL E.B. LICENSE No. 0006719

PRODUCT REVISED
as complying with the Florida
Building Code
Acceptance No 06-0306.03
Expiration Date 03/04/11
By
Miami Dade Product Control
Division

RESERVED FOR METRO-DADE USE ONLY

YKK AP America

YKK AP AMERICA, INC.
5630 GWALTNEY DRIVE
ATLANTA, GEORGIA 30336

SYSTEM	SCALE
YHC 300 SINGLE GLAZING SYSTEM	1/2

DESCRIPTION: MID-ANCHOR CLIP DETAILS

DRAWING NUMBER	REV.
YHC-300-OG-SS	A

APPROVED BY	DRAWN BY	DATE	SHEET NO.
JIA	RTB	8/5/02	17 OF 24

G:\SYSDWGS\YHC300OG\DADE\SINGLE\SMALLMISSILE\YHC300p17ss.DWG

REV.	DESCRIPTION	BY	DATE
A	NO CHANGE THIS SHEET	JIA	2/6/06

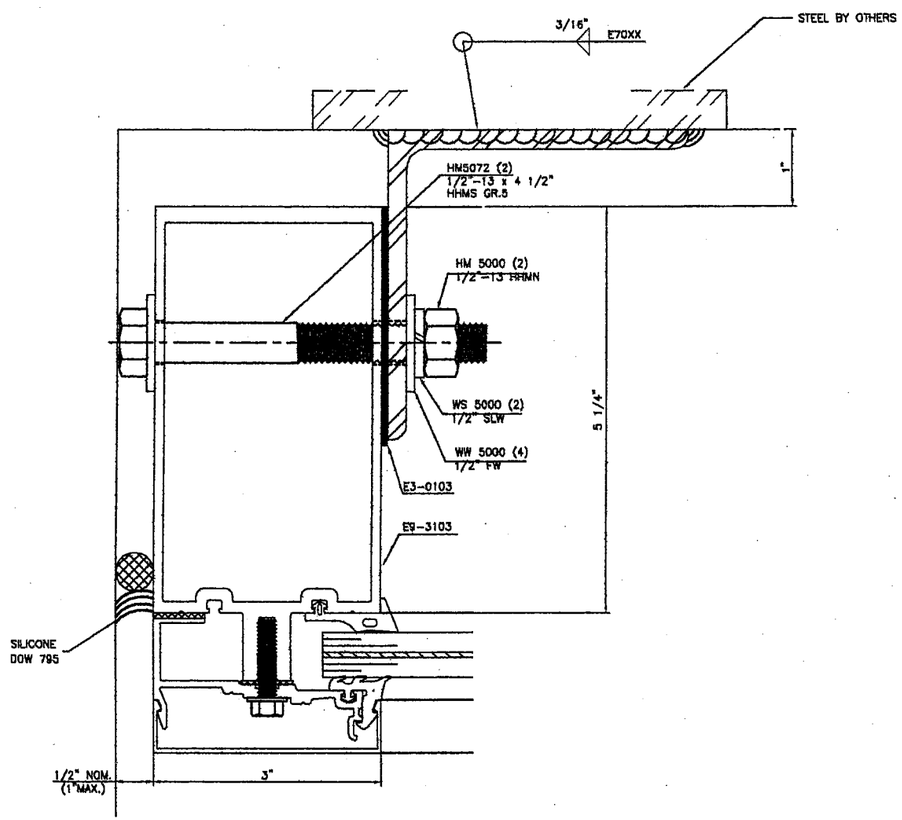

SECTION P-P

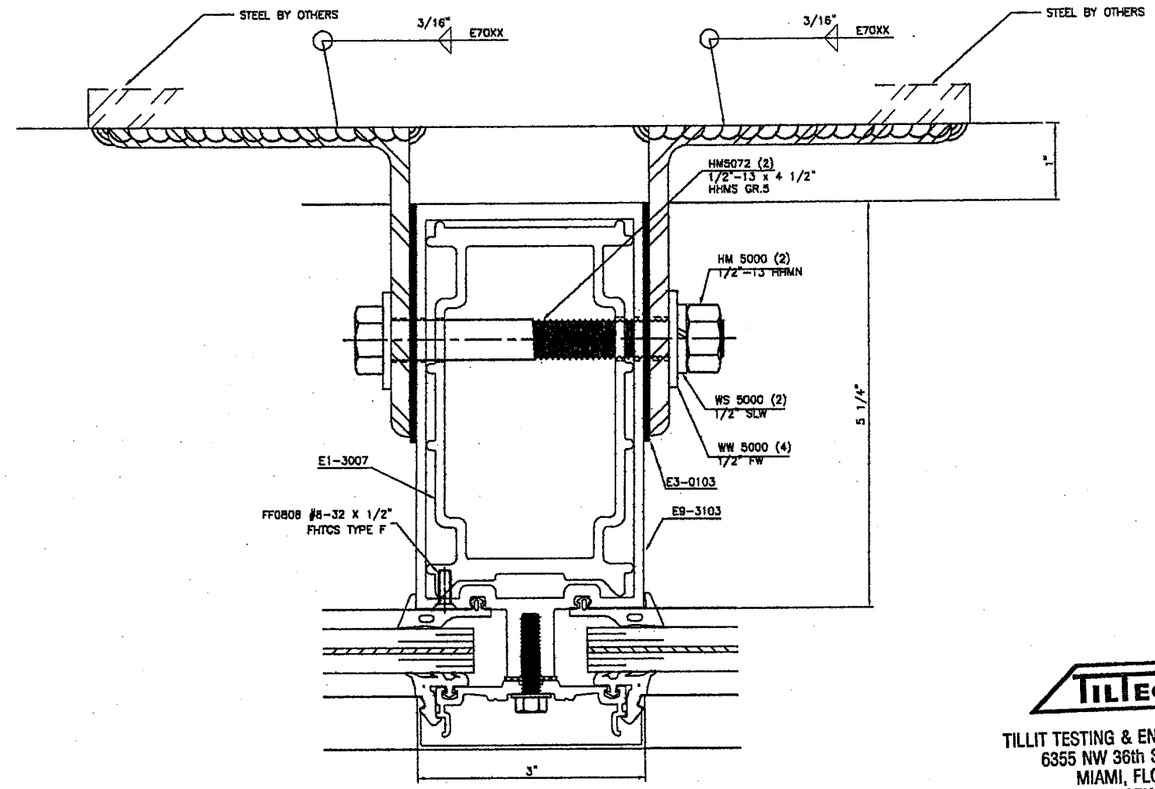

SECTION Q-Q

TILTECO INC.

TILLIT TESTING & ENGINEERING COMPANY
6355 NW 36th STREET, STE. 305
MIAMI, FLORIDA 33166
FL E.B. LICENSE No. 0006719

PRODUCT REVISED
in complying with the Florida Building Code
Acceptance No. 06-0306.03
Expiration Date 03/04/11
By
Miami-Dade Product Control Division

RESERVED FOR METRO-DADE USE ONLY

YKK AP America

YKK AP AMERICA, INC.
5630 GWALTNEY DRIVE
ATLANTA, GEORGIA 30336

SYSTEM	SCALE
YHC 300 SINGLE GLAZING SYSTEM	1/2

DESCRIPTION: MID-ANCHOR CLIP DETAIL

DRAWING NUMBER	REV.
YHC-300-OG-SS	A

APPROVED BY	DRAWN BY	DATE	SHEET NO.
JIA	RTB	8/5/02	18 OF 24

WALTER A. TILLIT JR., P.E.
STRUCTURAL ENGINEER
FL. LIC.NO. 44167

APR 12 2006

G:\SYSDWGS\YHC300OG\DADE\SINGLE\SMALLMISSILE\YHC300p18ss.DWG

REV.	DESCRIPTION	BY	DATE
A	SECTIONS R, S, T & U	I.A.	2/28/06

WALTER A. TILLIT JR., P.E.
STRUCTURAL ENGINEER
FL. LIC.NO. 44167

APR 1 2 2006

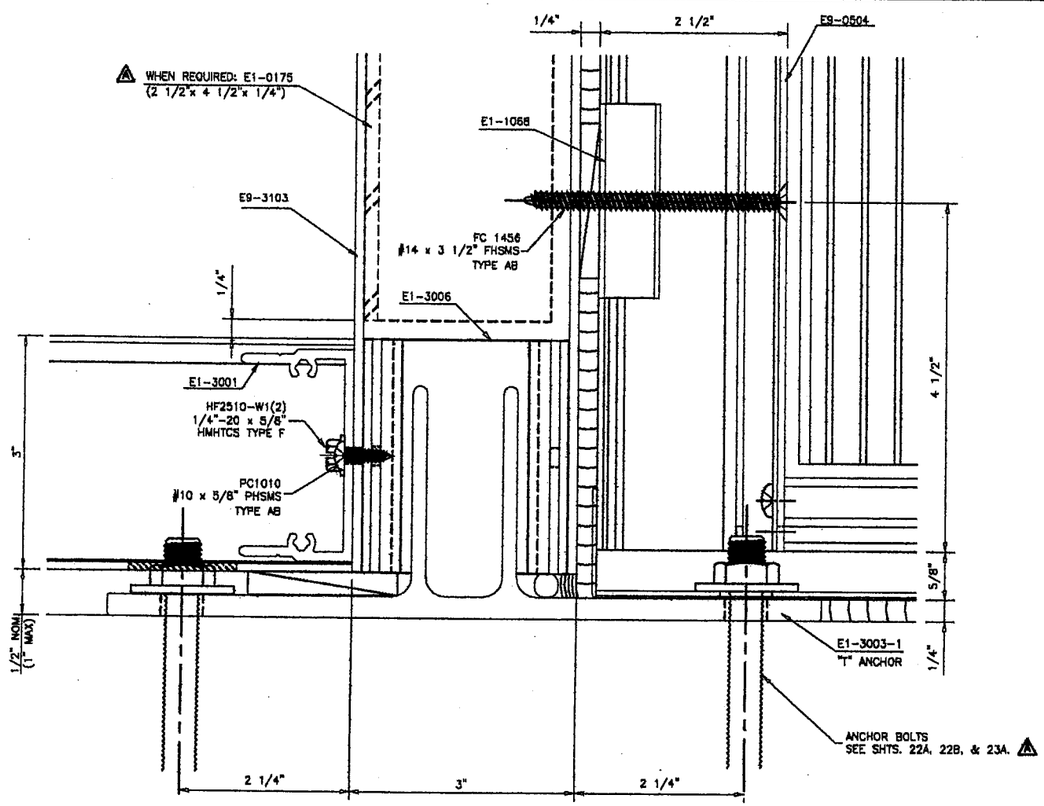

SECTION (R-R)
DOOR

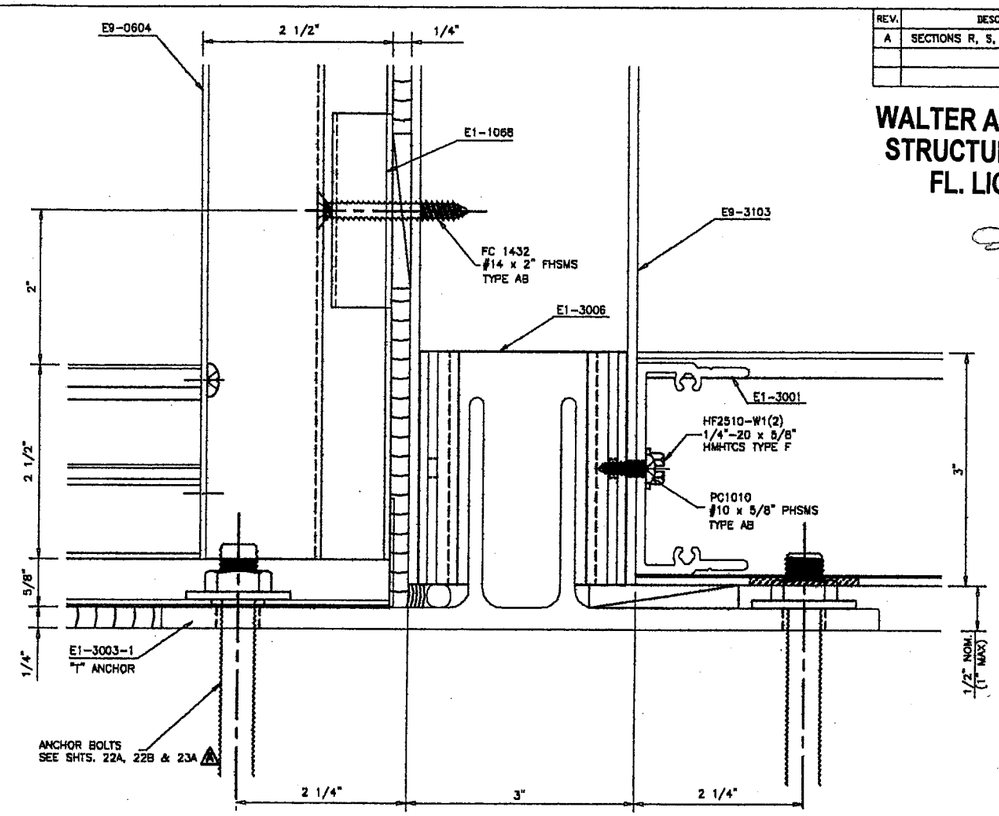

SECTION (S-S)
STOREFRONT

SEE DETAIL OF DOOR AND STOREFRONT IN THE CORRESPONDING NOTICE OF ACCEPTANCE

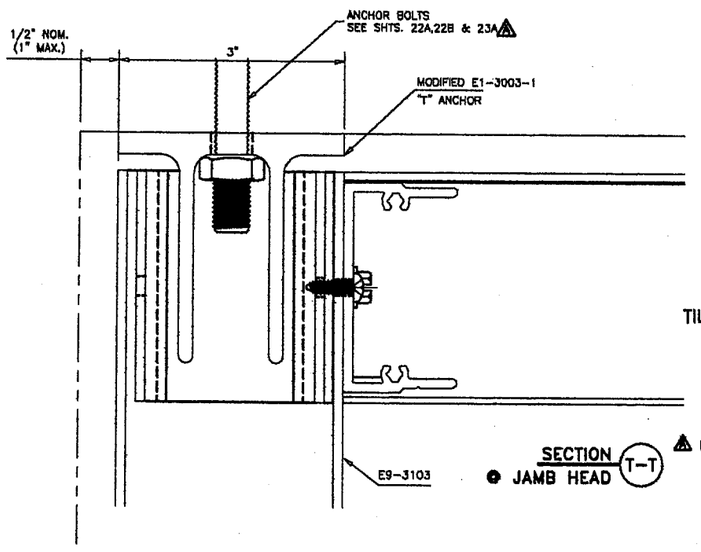

SECTION (T-T)
JAMB HEAD
NEW

NOTCH SIDE WALL OF JAMB TO CLEAR FOR ANCHOR AND SLEEVE
PROCEDURE TO INSTALLATION:
1 INSTALL MODIFIED T ANCHOR AND SECURE ANCHOR BOLT IN PLACE
2. APPLY SLEEVE OVER ANCHOR AND LET IT REST
3. INSTALL JAMB MEMBER AFTER BY MOVING IT FROM THE SIDE OF THE OPENING TOWARDS THE ADJACENT WALL AND OVER ANCHOR ASSEMBLY.
4. CONTINUE REGULAR INSTALLATION.

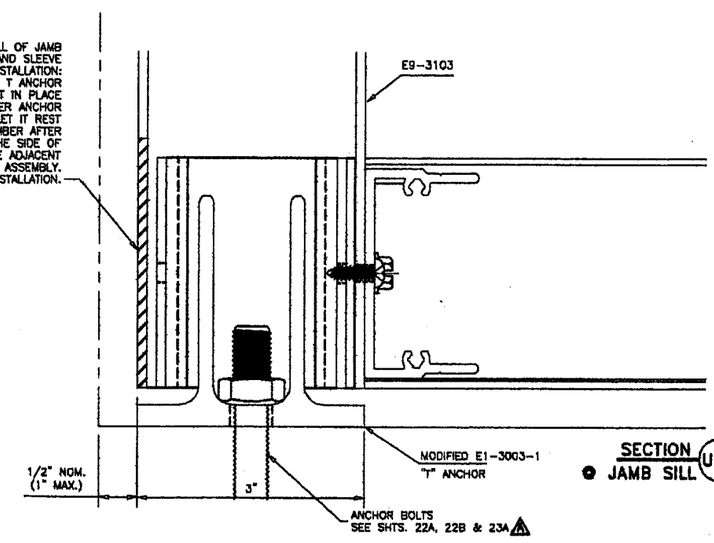

SECTION (U-U)
JAMB SILL
NEW

TILTECO INC.

TILLIT TESTING & ENGINEERING COMPANY
6355 NW 36th STREET, STE. 305
MIAMI, FLORIDA 33166
FL E.B. LICENSE No. 0006719

NOTE: USE ALT. DETAILS SHOWN ON T-T AND U-U FOR HIGH LOAD ONLY.

PRODUCT REVISED
as complying with the Florida Building Code
Acceptance No. 06-0306.03
Expiration Date 03/04/11
By
Miami-Dade Product Control Division

RESERVED FOR METRO-DADE USE ONLY

YKK AP AMERICA, INC.
5630 GWALTNEY DRIVE
ATLANTA, GEORGIA 30336

SYSTEM	SCALE
YHC 300 SINGLE GLAZING SYSTEM	1/2

DESCRIPTION: STOREFRONT/DOOR SILL ANCHOR DETAILS

DRAWING NUMBER	REV.
YHC-300-OG-SS	A

APPROVED BY	DRAWN BY	DATE	SHEET NO.
JIA	RTB	8/5/02	19 OF 24

G:\SYSDWGS\YHC300OG\DADE\SINGLE\SMALLMISSILE\YHC300p19ss.DWG

MATERIAL LIST

	DESCRIPTION	SHAPE #	MATERIAL	BASIC DIMENSIONS	REMARK	REV
	VERT. MULL.	E9-3103	6063-T6	3" x 6 1/8"		A
	HORIZONTAL	E9-3106	6063-T6	3" x 6 1/8"		
	OPEN SIDE HORIZ.	E9-3105	6063-T6	3" x 6 1/8"	FOR SILL & HEAD	
	TYP. PRESS. PLATE	E9-3140	6063-T6	2 1/2" x 5/8"	FOR VERT. & HORIZ. MULLION	
	PERIM. PRESS. PL.	AS-3144	6063-T6	2 3/4" x 1 1/4"	FOR JAMB, HEAD & SILL	
	SNAP COVER	E9-3161	6063-T6	3" x 11/16"	FOR VERT. & HORIZ. MULLION	
	2 PIECE FLUSH FILLER	E9-3162	6063-T6	4 7/8" x 5/16"	FOR OPEN SIDE HORIZ.	
	ANGLE	E9-9303	6063-T6	1 1/2" x 1 1/2"	FOR 90° CORNER	

PART LIST

	SHEAR CLIP	E1-3001	6063-T6	4 1/2" LG.	HORIZ. TO VERT. CONNECTION	
	ANCHOR / SHEAR CLIP "J"	E1-3002	6063-T6	4 1/2" LG.	SILL TO VERT. CONNECTION	
	"T" ANCHOR	E1-3003	6061-T6	4" LG.	TOP ANCHOR	
	"F" ANCHOR	E1-3004	6063-T6	4" LG.	TOP JAMB ANCHOR	
	SPLICE SLEEVE	E1-3005	6063-T6	6" LG.	FOR MULTI-SPAN APPLICATION	
	ANCHOR SLEEVE	E1-3006	6063-T6	3" LG.	USE WITH 'T' & 'F' ANCHORS	
	REINF. SLEEVE	E1-3007	6063-T6	29" LG.	AT MID-SPAN ANCHOR IN TWIN SPAN	
	SPLICE SLEEVE	E1-3009	FORMED ALUM.	2" LG.	FOR COVER	
	END PLATE	E1-3011	ALUM. SHT.		FOR VERT. MULLION SINGLE GL.	
	MODIFIED "T" ANCHOR	E1-3003-1	6063-T6	4" LG.	TOP & BOTTOM JAMB & ANCHOR	
	STEEL REINFORCEMENT	E1-0175	STEEL A36	2 1/2" x 4 1/2" x 1/4"	FOR INTERMEDIATE VERT.	A

DEPTH

SYSTEM **YHC 300**

DESCRIPTION **HURRICANE CURTAINWALL**

FINISH PAINTED OR ANODIZED

HARDWARE N/A

GLAZING SEE ELEVATION SHEET

BILL OF MATERIALS

FOR SINGLE GLAZING

PART LIST

	DESCRIPTION	PART #	MATERIAL	BASIC DIMENSIONS	COLOR	REMARK	REV
	EXT. GASKET 3/16" F.C.	E2-0351	EPDM		BLACK	EXTERIOR FOR 9/16" GLASS	
	INTERIOR GASKET	E2-0376	EPDM		BLACK	INTERIOR	
	END DAM BLOCK	E2-0358	E.V.A. SPONGE		GREY	AT EVERY HORIZ. END	
	ISOLATOR TAPE	E2-0356	PVC SPONGE	11/16" x 1/8"	BLACK	FOR PERIMETER PRESS. PLATE	
	SETTING BLOCK	E2-0357	EPDM	7/16" x 7/16" x 4" LG.	BLACK	FOR 1/4" SPANDREL GL. (2/LITE)	
	SLIP PAD	E3-0103	NYLON	3 3/4" x 5" x 1/16"	WHITE	FOR STEEL ANCHORS	
	FH SMS (F)	FF-0808	ST. ZINC PLATED	#8 x 1/2"		TO LOCATE E1-3007	
	FH SMS (AB)	FC-1016	ST. ZINC PLATED	#10 x 1"		FOR E9-3141 ADAPTOR	
	FH SMS (AB)	FC-1212	ST. ZINC PLATED	#12 x 3/4"		FOR SPLICE SLEEVE	
	FH SMS (AB)	FC-1220	ST. ZINC PLATED	#12 x 1 1/4"		FOR HORIZONTAL/SHEAR CLIP	
	FH SMS (AB)	FC-1410	ST. ZINC PLATED	#14 x 5/8"		FOR MULLION END CAP	
	PH SMS (AB)	PC-1010	ST. ZINC PLATED	#10 x 5/8"		FOR ANCHOR SLEEVE	
	HWH TCS (F)	HF2510-W1	ST. ZINC PLATED	1/4" - 20 x 5/8"		FOR SHEAR CLIP	
	HWH TCS (F)	HF2516-W1	ST. ZINC PLATED	1/4" - 20 x 1"		FOR SHEAR CLIP & STEEL REINF.	
	HH MS	HM-2516-W3	ST. ZINC PLATED	1/4" - 20 x 1"		FOR PRESSURE PLATE	
	BOLT	HM-3864	ST. ZINC PLATED	1/2"-13 x 4"		FOR "J" ANCHOR MULLION	
	BOLT	HM-3816	STEEL GR.5	1/2"-13 x 4"		FOR "J" ANCHOR JAMB	
	NUT 1/2"	HM-3800	STEEL GR.5	1/2"-13		FOR "J" ANCHOR MULL. & JAMB	
	WASHER 1/2"	WW-3800	ST. ZINC PLATED	1/2"		FOR "J" ANCHOR MULL. & JAMB	
	LOCK-WASHER 1/2"	WS-3800	ST. ZINC PLATED	1/2"		FOR "J" ANCHOR MULL. & JAMB	
	NUT - 1/2"	HM-5000	ST. ZINC PLATED	1/2" - 13		FOR INTERMEDIATE ANCHORS	
	WASHER - 1/2"	WN-5000	ST. ZINC PLATED	1/2"		FOR INTERMEDIATE ANCHORS	
	LOCKWASHER - 1/2"	WS-5000	ST. ZINC PLATED	1/2"		FOR INTERMEDIATE ANCHORS	
	BOLT	HM-5072	STEEL GR.5	1/2" - 13 x 4 1/2"		FOR INTERMEDIATE ANCHORS	
	STEEL ANGLE	E1-1204	STEEL A36	4" x 4" x 1/4" x 5" LG.		WINDLOAD ANCHORS	
	STEEL ANGLE	E1-1205	STEEL A36	4" x 4" x 1/4" x 4" LG.		DEADLOAD ANCHORS	
	DOW 795		SILICONE			FOR PERIMETER CAULKING	

NOTE :

PRODUCT REVISED
as complying with the Florida Building Code
Acceptance No. 06-0306.03
Expiration Date 03/04/11
By
Miami-Dade Product Control Division

REV	DESCRIPTION	
A	TO MEET FBC. 2004	3/1/2006

NO. YHC-300-OG-SS A

CKD BY	BY	DATE
JIA	RTB	8/5/02

LP LOOSE PART
S SELECTION PART
OP OPTION PART Y: COLOR INDICATED

G:\SYSDWGS\YHC300OG\DADE\SINGLE\SMALLMISSILE\YHC300p20ss.XLS

APR 12 2006

WALTER A. TILLIT JR., P.E.
STRUCTURAL ENGINEER
FL. LIC.NO. 44167

TILLECO INC.
TILLIT TESTING & ENGINEERING COMPANY
6355 NW 36th STREET, STE. 305
MIAMI, FLORIDA 33166
FL E.B. LICENSE No. 0006719

REV.	DESCRIPTION	BY	DATE
A	MULLION DIMENSION "B"	I.A.	2/28/06

YHC 300 O/G SINGLE SPAN

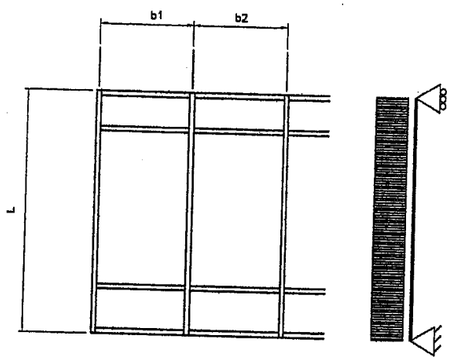

MULLION DIMENSION $b = \frac{b1 + b2}{2}$ ⚠

YHC 300 O/G TWIN SPAN

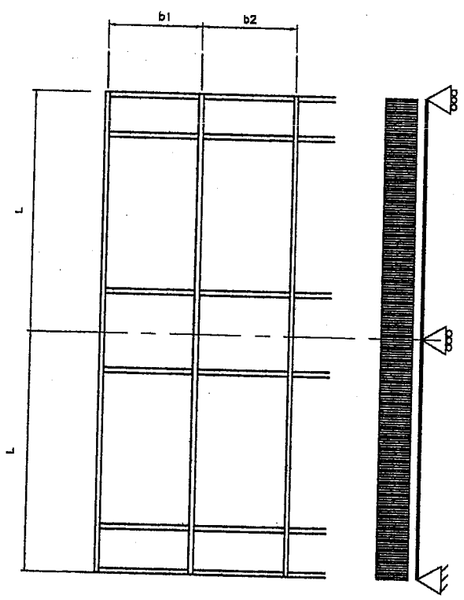

MULLION DIMENSION $b = \frac{b1 + b2}{2}$ ⚠

⚠ MAXIMUM MULLION SPAN "L" (Ft) SCHEDULE FOR A GIVEN MULLION DIMENSION "b" (Ft) AND A GIVEN DESIGN WIND LOAD "W" (psf)

CASE 1 : SINGLE SPAN WITH UNREINFORCED MULLION. (SEE DET. 3/SHT.4)

CASE 2 : SINGLE SPAN WITH REINFORCED MULLION FULL HEIGHT.(SEE DET. 2/SHT. 4) (LENGTH OF E1-0175=L-6 1/2")

CASE 3 : TWIN SPANS WITH REINFORCED MULLION AT INTERMEDIATE SUPPORT ONLY.(SEE DET'S 54 & 54A/SHT.17 & SECT. QQ/SHT.18) (LENGTH OF E1-3007=29").

⚠

MAXIMUM DESIGN LOAD "W"	MULLION DIMENSION "b"	CASE 1 "L"	CASE 2 "L"	CASE 3 "L"
±60.0	3'-0"	11'-6"	14'-0"	14'-0"
	3'-6"	11'-6"	14'-0"	14'-0"
	4'-0"	11'-6"	14'-0"	14'-0"
	4'-6"	10'-11"	14'-0"	14'-0"
	5'-0"	10'-5"	14'-0"	14'-0"
	5'-6"	9'-11"	13'-7"	13'-7"
	6'-0"	9'-6"	13'-3"	13'-3"
±65.0	3'-0"	11'-6"	14'-0"	14'-0"
	3'-6"	11'-6"	14'-0"	14'-0"
	4'-0"	11'-2"	14'-0"	14'-0"
	4'-6"	10'-6"	14'-0"	14'-0"
	5'-0"	10'-0"	13'-8"	13'-8"
	5'-6"	9'-6"	13'-3"	13'-3"
	6'-0"	9'-1"	12'-10"	12'-10"
±70.0	3'-0"	11'-6"	14'-0"	14'-0"
	3'-6"	11'-6"	14'-0"	14'-0"
	4'-0"	10'-9"	14'-0"	14'-0"
	4'-6"	10'-2"	13'-10"	13'-10"
	5'-0"	9'-7"	13'-4"	13'-4"
	5'-6"	9'-2"	12'-11"	12'-11"
	6'-0"	8'-9"	12'-7"	12'-7"
±75.0	3'-0"	11'-6"	14'-0"	14'-0"
	3'-6"	11'-1"	14'-0"	14'-0"
	4'-0"	10'-4"	14'-0"	14'-0"
	4'-6"	9'-9"	13'-6"	13'-6"
	5'-0"	9'-3"	13'-0"	13'-0"
	5'-6"	8'-10"	12'-7"	12'-7"
	6'-0"	8'-6"	12'-3"	12'-3"

⚠

MAXIMUM DESIGN LOAD "W"	MULLION DIMENSION "b"	CASE 1 "L"	CASE 2 "L"	CASE 3 "L"
±80.0	3'-0"	11'-6"	14'-0"	14'-0"
	3'-6"	10'-9"	14'-0"	14'-0"
	4'-0"	10'-0"	13'-9"	13'-9"
	4'-6"	9'-6"	13'-3"	13'-3"
	5'-0"	9'-0"	12'-9"	12'-9"
	5'-6"	8'-7"	12'-4"	12'-4"
	6'-0"	7'-11"	11'-8"	11'-8"
±85.0	3'-0"	11'-3"	14'-0"	14'-0"
	3'-6"	10'-5"	14'-0"	14'-0"
	4'-0"	9'-9"	13'-5"	13'-5"
	4'-6"	9'-2"	13'-0"	13'-0"
	5'-0"	8'-9"	12'-6"	12'-6"
	5'-6"	8'-2"	12'-0"	12'-0"
	6'-0"	7'-6"	11'-0"	11'-0"
±90.0	3'-0"	10'-11"	14'-0"	14'-0"
	3'-6"	10'-1"	13'-10"	13'-10"
	4'-0"	9'-6"	13'-3"	13'-3"
	4'-6"	8'-11"	12'-9"	12'-9"
	5'-0"	8'-6"	12'-6"	12'-6"
	5'-6"	7'-8"	11'-4"	11'-4"
	6'-0"	7'-0"	10'-4"	10'-4"

TILLECO INC.

TILLIT TESTING & ENGINEERING COMPANY
6355 NW 36th STREET, STE. 305
MIAMI, FLORIDA 33166
FL E.B. LICENSE No. 0006719

WALTER A. TILLIT JR., P.E.
STRUCTURAL ENGINEER
FL. LIC.NO. 44167

APR 12 2006

PRODUCT REVIEWED
as complying with the Florida Building Code
Acceptance No. 06-0306.03
Expiration Date 03/04/11
By
Miami-Dade Product Control Division

RESERVED FOR METRO-DADE USE ONLY

YKK ap America

YKK AP AMERICA, INC.
5630 GWALTNEY DRIVE
ATLANTA, GEORGIA 30336

SYSTEM	SCALE
YHC 300 SINGLE GLAZING SYSTEM	NONE

DESCRIPTION: MULLION CHART

DRAWING NUMBER	REV.
YHC-300-OG-SS	A

APPROVED BY	DRAWN BY	DATE	SHEET NO.
JIA	JIA	8/5/02	21 OF 24

G:\SYSDWGS\YHC300OG\DADE\SINGLE\SMALLMISSILE\YHC300p21ss.DWG

REV.	DESCRIPTION	BY	DATE
A	CONDITIONS 1 TO 5 & NEW 1A/5A	LA	2/28/06
	+ ANCHOR BOLT SCHEDULE.		
B	ANCHOR "F" MIN. E.D. & SPACING	L.G.	4/7/06

YHC 300 O/G SINGLE SPAN

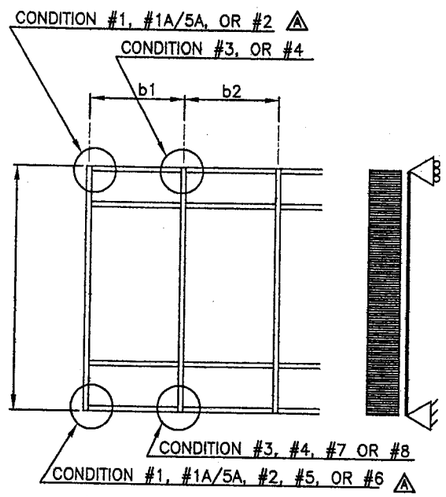

MULLION DIMENSION. $b = \frac{b1 + b2}{2}$ A

ANCHOR BOLT SCHEDULE A

ALL ANCHOR BOLTS SHALL BE INSTALLED STRICTLY FOLLOWING THE ANCHOR MANUFACTURER'S SPECS AND RECOMMENDATION.

ANCHOR BOLT TYPE	DIAMETER & MODEL NAME	MANUFACTURER	Min. EDGE DISTANCE	Min. EMBEDMENT	Min. SPACING	SUBSTRATE
"A"	1/2"ø KWIK BOLT 3	HILTI, INC	3 3/8"	2 1/4"	3" O.C.	f'c=3ksi CONCRETE
"B"	1/2"ø HVA W/ SUPER HAS ROD	HILTI, INC	3"	4 1/4"	3" O.C.	f'c=3ksi CONCRETE
"A1"	1/2"ø KWIK BOLT 3	HILTI, INC	3 3/8"	2 1/4"	3 3/8"	f'c=3ksi CONCRETE
"B1"	1/2"ø HVA W/ SUPER HAS ROD	HILTI, INC	3"	4 1/4"	3 3/8"	f'c=3ksi CONCRETE
"C"	5/8"ø POWER BOLT	POWERS FASTENERS,INC	5"	4"	7 1/2" O.C.	f'c=3ksi CONCRETE
"D"	1/2"ø HVA W/ SUPER HAS ROD	HILTI, INC	5"	4 1/4"	7 1/2" O.C.	f'c=3ksi CONCRETE
"E"	1/2"ø POWER BOLT	POWERS FASTENERS,INC	3 1/2"	4"	7 1/2" O.C.	f'c=3ksi CONCRETE
"F"	1/2"ø BOLT W/ NUT & WASHERS	GRADE 5 STEEL *	B 1"	N/A	B 3" O.C.	1/4" Min. STEEL

* SHALL COMPLY W/ DIN 50018.

TILLECO INC.

TILLIT TESTING & ENGINEERING COMPANY
6355 NW 36th STREET, STE. 305
MIAMI, FLORIDA 33166
FL E.B. LICENSE No. 0006719

CONDITION #8

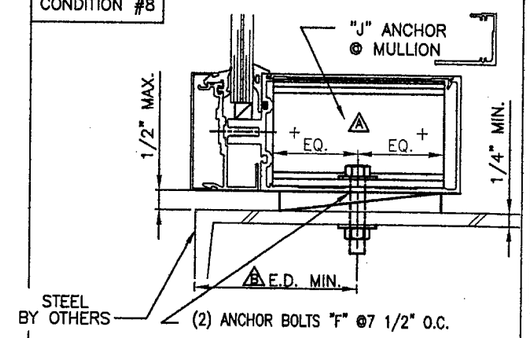

CONDITION #7

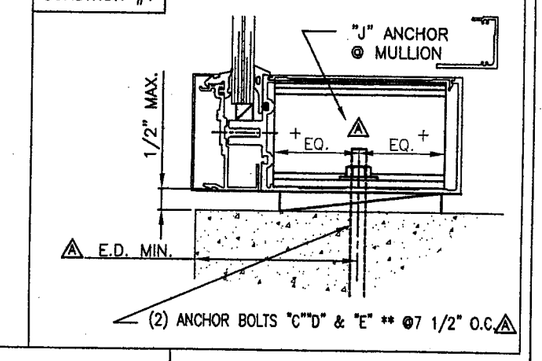

CONDITION #1

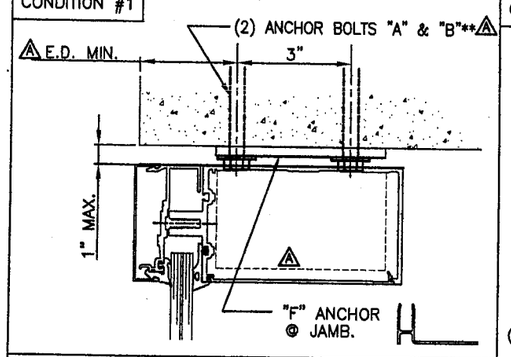

CONDITION #1A/5A A

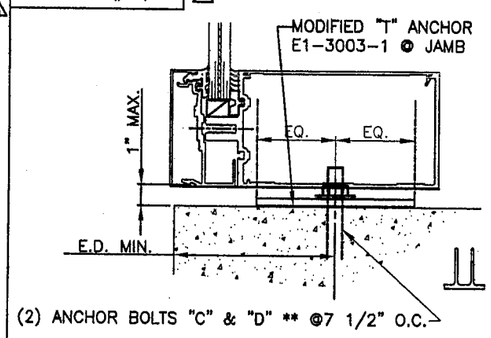

CONDITION #6

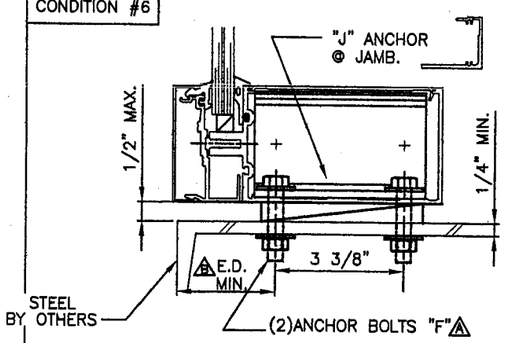

CONDITION #2

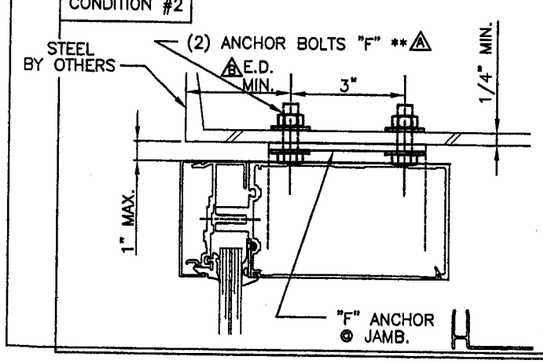

CONDITION #3

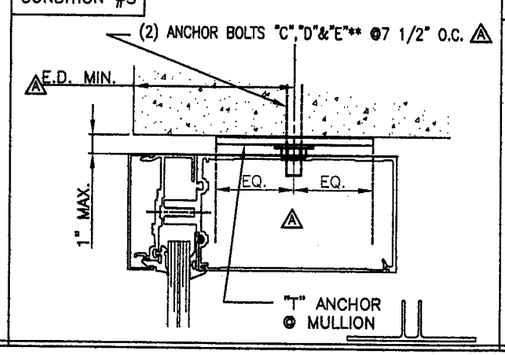

CONDITION #4

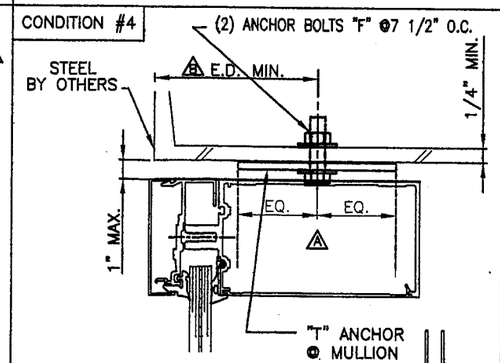

CONDITION #5

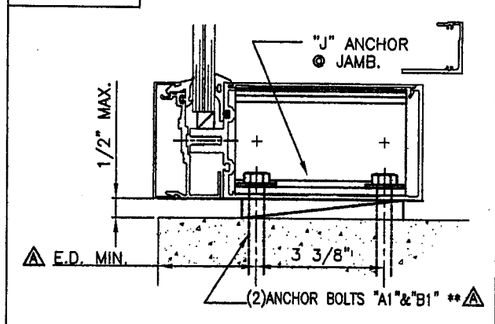

WALTER A. TILLIT JR., P.E.
STRUCTURAL ENGINEER
FL. LIC.NO. 44167

APR 12 2006

PRODUCT REVIEWED
as complying with the Florida Building Code
Acceptance No. 06-0306.03
Expiration Date 03/09/11
By
Miami-Dade Product Control Division

RESERVED FOR METRO-DADE USE ONLY

YKK ap America
YKK AP AMERICA, INC.
5630 GWALTNEY DRIVE
ATLANTA, GEORGIA 30336

SYSTEM	SCALE
YHC 300 SINGLE GLAZING SYSTEM	1/2
DESCRIPTION: ANCHOR BOLT GUIDE -SINGLE SPAN-	
DRAWING NUMBER: YHC-300-OG-SS	REV. A

APPROVED BY	DRAWN BY	DATE	SHEET NO.
JIA	JIA	8/5/02	22 OF 24

G:\SYSDWGS\YHC3000G\DADE\SINGLE\SMALLMISSILE\YHC300p22ss.DWG

REV.	DESCRIPTION	BY	DATE

ANCHOR BOLT'S PRESSURE RATING : SINGLE SPAN

MULLION SPAN "L"	MULLION DIMENS. "b"	DESIGN LOAD OF ANCHOR BOLTS (psf) POSITIVE OR NEGATIVE											
		CONDITION # 1		CONDITION # 3			CONDITION # 5		CONDITION # 7			CONDITION # 1A/5A	
		OPTIONAL ANCHOR BOLTS TYPE											
		A	B	C	D	E	A1	B1	C	D	E	C	D
8'-6"	4'-6"	90	90	90	90	90	90	90	90	90	90	90	90
	4'-9"	90	88.7	90	90	90	90	90	90	90	90	90	90
	5'-0"	87.0	84.2	90	90	90	89.4	90	90	90	90	90	90
	5'-3"	82.8	80.2	90	90	90	85.2	87.1	90	90	88.5	90	90
	5'-6"	79.1	76.6	90	90	89.3	81.3	83.2	90	90	89.4	90	90
	5'-9"	75.6	73.2	90	90	85.4	77.7	79.5	90	90	81.8	90	90
	6'-0"	72.5	70.2	90	90	81.9	74.5	78.2	90	90	77.4	90	90
9'-0"	4'-3"	90	90	90	90	90	90	90	90	90	90	90	90
	4'-6"	90	88.4	90	90	90	90	90	90	90	90	90	90
	4'-9"	86.5	83.7	90	90	90	88.9	90	90	90	90	90	90
	5'-0"	82.1	79.6	90	90	90	84.4	86.4	90	90	87.7	90	90
	5'-3"	78.2	75.8	90	90	88.4	80.4	82.3	90	90	83.6	90	90
	5'-6"	74.7	72.3	90	90	84.4	76.8	78.5	90	90	79.8	90	90
	5'-9"	71.4	69.2	90	90	80.7	73.4	75.1	90	90	76.3	90	90
	6'-0"	68.4	66.3	90	90	77.3	70.4	72.0	87.9	90	73.1	89.1	90
9'-6"	4'-0"	90	90	90	90	90	90	90	90	90	90	90	90
	4'-3"	90	88.7	90	90	90	90	90	90	90	90	90	90
	4'-6"	86.5	83.7	90	90	90	88.9	90	90	90	90	90	90
	4'-9"	81.9	79.3	90	90	90	84.2	86.2	90	90	87.5	90	90
	5'-0"	77.8	75.4	90	90	87.9	80.0	81.9	90	90	83.1	90	90
	5'-3"	74.1	71.8	90	90	83.7	76.2	78.0	90	90	79.2	90	90
	5'-6"	70.7	68.5	90	90	79.9	72.7	74.4	90	90	75.6	90	90
	5'-9"	67.7	65.5	90	90	76.4	69.6	71.2	86.8	90	72.3	90	90
	6'-0"	64.8	62.8	89	90	73.3	66.7	68.2	86.3	90	69.3	90	90
10'-0"	3'-9"	90	90	90	90	90	90	90	90	90	90	90	90
	4'-0"	90	89.5	90	90	90	90	90	90	90	90	90	90
	4'-3"	87.0	84.2	90	90	90	89.4	90	90	90	90	90	90
	4'-6"	82.1	79.6	90	90	90	84.4	86.4	90	90	87.7	90	90
	4'-9"	77.8	75.4	90	90	87.9	80.0	81.9	90	90	83.1	90	90
	5'-0"	73.9	71.6	90	90	83.5	76.0	77.8	90	90	79.0	90	90
	5'-3"	70.4	68.2	90	90	79.5	72.4	74.1	90	90	75.2	90	90
	5'-6"	67.2	65.1	90	90	75.9	69.1	70.7	86.3	90	71.8	90	90
	5'-9"	64.3	62.3	88.2	90	72.6	66.1	67.6	82.5	90	68.7	88.3	90
	6'-0"	61.6	59.7	84.6	90	69.6	63.3	64.8	79.1	90	65.8	84.6	90

MULLION SPAN "L"	MULLION DIMENS. "b"	DESIGN LOAD OF ANCHOR BOLTS (psf) POSITIVE OR NEGATIVE											
		CONDITION # 1		CONDITION # 3			CONDITION # 5		CONDITION # 7			CONDITION # 1A/5A	
		OPTIONAL ANCHOR BOLTS TYPE											
		A	B	C	D	E	A1	B1	C	D	E	C	D
10'-6"	3'-9"	90	90	90	90	90	90	90	90	90	90	90	90
	4'-0"	88.0	85.2	90	90	90	90	90	90	90	90	90	90
	4'-3"	82.8	80.2	90	90	90	85.2	87.1	90	90	88.5	90	90
	4'-6"	78.2	75.8	90	90	88.4	80.4	82.3	90	90	83.6	90	90
	4'-9"	74.1	71.8	90	90	83.7	76.2	78.0	90	90	79.2	90	90
	5'-0"	70.4	68.2	90	90	79.5	72.4.	74.1	90	90	75.2	90	90
	5'-3"	67.0	64.9	90	90	75.8	68.9	70.5	86.1	90	71.6	90	90
	5'-6"	64.0	62.0	87.9	90	72.3	65.8	67.3	82.1	90	68.4	87.9	90
	5'-9"	61.2	59.3	84.0	90	69.2	62.9	64.4	78.6	90	65.4	84.2	90
	6'-0"	58.7	56.8	80.5	90	66.3	60.3	61.7	75.3	90	62.7	80.6	90
11'-0"	3'-9"	89.6	86.8	90	90	90	90	90	90	90	90	90	90
	4'-0"	84.0	81.4	90	90	90	86.4	88.4	90	90	89.7	90	90
	4'-3"	79.1	76.6	90	90	89.3	81.3	83.2	90	90	84.4	90	90
	4'-6"	74.7	72.3	90	90	84.4	76.8	78.5	90	90	79.8	90	90
	4'-9"	70.7	68.5	90	90	79.9	72.7	74.4	90	90	75.6	90	90
	5'-0"	67.2	65.1	90	90	75.9	69.1	70.7	86.3	90	71.8	90	90
	5'-3"	64.0	62.0	87.9	90	72.3	85.8	67.3	82.1	90	68.4	87.9	90
	5'-6"	61.1	59.2	83.9	90	69.0	52.8	64.3	78.4	90	65.3	83.9	90
	5'-9"	58.4	56.6	80.2	90	66.0	60.1	61.5	75.0	90	62.4	80.3	90
	6'-0"	56.0	54.2	76.9	90	63.3	57.6	58.9	71.9	90	59.8	76.9	90
11'-6"	3'-9"	85.7	83.0	90	90	90	88.1	90	90	90	90	90	90
	4'-0"	80.3	77.8	90	90	90	82.6	84.5	90	90	85.8	90	90
	4'-3"	75.6	73.2	90	90	85.4	77.7	79.5	90	90	80.8	90	90
	4'-6"	71.4	69.2	90	90	80.7	73.4	75.1	90	90	76.3	90	90
	4'-9"	67.7	65.5	90	90	76.4	69.6	71.2	86.8	90	72.3	90	90
	5'-0"	64.3	62.3	88.2	90	72.6	66.1	67.6	82.5	90	68.7	88.3	90
	5'-3"	61.2	59.3	84.0	90	69.2	62.9	64.4	78.6	90	65.4	84.1	90
	5'-6"	58.4	56.6	80.2	90	66.0	60.1	61.5	75.0	90	62.4	80.3	90
	5'-9"	55.9	54.1	76.7	90	63.2	57.5	58.8	71.7	90	59.7	76.8	90
	6'-0"	53.6	51.9	73.5	90	65.5	55.1	56.3	68.8	90	57.2	73.6	90

WALTER A. TILLIT JR., P.E.
STRUCTURAL ENGINEER
FL. LIC.NO. 44167

APR 12 2006

PRODUCT REVISED
as complying with the Florida Building Code
Acceptance No 06-0306.03
Expiration Date 03/04/11
By
Miami-Dade Product Control Division

NOTE: MULLION SPAN "L" FOR A GIVEN MULLION DIMENSION "b" SHALL NOT EXCEED MAXIMUN VALUES INDICATED ON SCHEDULE ON SHEET 21

TILTECO INC.
TILLIT TESTING & ENGINEERING COMPANY
6355 NW 36th STREET, STE. 305
MIAMI, FLORIDA 33166
FL E.B. LICENSE No. 0006719

RESERVED FOR METRO-DADE USE ONLY

YKK ap America
YKK AP AMERICA, INC.
5630 GWALTNEY DRIVE
ATLANTA, GEORGIA 30336

SYSTEM	SCALE
YHC 300 SINGLE GLAZING SYSTEM	1/2

DESCRIPTION: ANCHOR BOLT GUIDE -SINGLE SPAN-

DRAWING NUMBER	REV.
YHC-300-OG-SS	

APPROVED BY	DRAWN BY	DATE	SHEET NO.
JIA	I.A	2/28/06	22A OF 24

G:\SYSDWGS\YHC300OG\DADE\SINGLE\SMALLMISSILE\YHC300p22Ass.DWG

REV.	DESCRIPTION	BY	DATE

ANCHOR BOLT'S PRESSURE RATING : SINGLE SPAN

(CONTINUED)

MULLION SPAN "L"	MULLION DIMENS. "b"	DESIGN LOAD OF ANCHOR BOLTS (psf) POSITIVE OR NEGATIVE											
		CONDITION # 1		CONDITION # 3			CONDITION # 5		CONDITION # 7			CONDITION # 1A/5A	
		OPTIONAL ANCHOR BOLTS TYPE											
		A	B	C	D	E	A1	B1	C	D	E	C	D
12'-0"	4'-0"	77.0	74.6	90	90	87	72.2	81.0	90	90	82.3	90	90
	4'-3"	72.5	70.2	90	90	81.9	74.5	76.2	90	90	77.4	90	90
	4'-6"	68.4	66.3	90	90	77.3	70.4	72.0	87.9	90	73.1	90	90
	4'-9"	64.8	62.8	89.0	90	73.3	66.7	68.2	83.2	90	69.3	89.1	90
	5'-0"	61.6	59.7	84.6	90	69.6	63.3	64.8	79.1	90	65.8	84.6	90
	5'-3"	58.7	56.8	80.5	90	66.3	60.3	61.7	75.3	90	62.7	80.6	90
	5'-6"	56.0	54.2	76.9	90	63.3	57.6	58.9	71.9	90	59.8	76.9	90
	5'-9"	53.6	51.9	73.5	90	60.5	55.1	56.3	68.8	90	57.2	73.6	90
	6'-0"	51.3	49.7	70.5	90	58	52.8	54.0	65.9	90	54.8	70.5	90
12'-6"	4'-0"	73.9	71.6	90	90	83.5	70.6	77.8	90	90	79.0	90	90
	4'-3"	69.6	67.4	90	90	78.6	71.5	73.2	89.3	90	74.3	90	90
	4'-6"	65.7	63.6	90	90	74.2	67.6	69.1	84.3	90	70.2	90	90
	4'-9"	62.2	60.3	85.5	90	70.3	64.0	65.5	79.4	90	66.5	85.5	90
	5'-0"	59.1	57.3	81.2	90	66.8	60.8	62.2	75.9	90	63.2	81.2	90
	5'-3"	56.3	54.6	77.3	90	63.6	57.9	59.2	72.3	90	60.2	77.3	90
	5'-6"	53.8	52.1	73.8	90	60.7	55.3	56.6	69.0	90	57.4	73.8	90
	5'-9"	51.4	49.8	70.6	90	58.1	52.9	54.1	66.0	90	54.9	70.6	90
	6'-0"	49.3	47.7	67.7	90	55.7	50.7	51.8	63.3	87.4	52.6	67.7	90
13'-0"	4'-0"	71.1	68.8	90	90	80.3	73.1	79.8	91.2	90	75.9	90	90
	4'-3"	66.9	64.8	90	90	75.6	68.8	70.4	85.9	90	71.5	90	90
	4'-6"	63.2	61.2	86.7	90	71.4	65.0	66.5	81.1	90	67.5	86.8	90
	4'-9"	59.4	58.0	82.2	90	67.6	61.5	63.0	76.8	90	63.9	82.2	90
	5'-0"	56.9	55.1	78.1	90	64.2	58.5	59.8	73.0	90	60.7	78.1	90
	5'-3"	54.2	52.5	74.3	90	61.2	55.7	57.0	69.5	90	52.8	74.4	90
	5'-6"	51.7	50.1	71.0	90	58.4	53.1	54.4	66.3	90	55.2	71.0	90
	5'-9"	49.4	47.9	67.9	90	55.9	50.8	52.0	63.5	87.7	52.8	67.9	90
	6'-0"	47.4	45.9	65.1	88.4	53.5	48.7	49.8	60.8	84.0	50.6	65.1	88.5

MULLION SPAN "L"	MULLION DIMENS. "b"	DESIGN LOAD OF ANCHOR BOLTS (psf) POSITIVE OR NEGATIVE											
		CONDITION # 1		CONDITION # 3			CONDITION # 5		CONDITION # 7			CONDITION # 1A/5A	
		OPTIONAL ANCHOR BOLTS TYPE											
		A	B	C	D	E	A1	B1	C	D	E	C	D
13'-6"	4'-0"	68.4	66.3	90	90	77.3	70.4	72.0	87.9	90	73.1	90	90
	4'-3"	64.4	62.4	88.4	90	72.8	66.2	67.8	82.7	90	68.8	88.5	90
	4'-6"	60.8	58.4	83.5	90	68.7	62.6	64.0	78.1	90	65.0	83.6	90
	4'-9"	57.6	55.8	79.1	90	65.1	59.3	60.6	74.0	90	61.6	79.2	90
	5'-0"	54.8	53.0	75.2	90	61.9	56.3	57.6	70.3	90	58.5	75.2	90
	5'-3"	52.1	50.5	71.6	90	58.4	53.6	54.9	66.9	90	55.7	71.6	90
	5'-6"	49.8	48.2	68.3	90	56.2	51.2	52.4	63.9	88.2	53.2	68.4	90
	5'-9"	47.6	46.1	65.4	88.9	53.8	49.0	50.1	61.1	84.4	50.9	65.4	88.9
	6'-0"	45.6	44.2	62.6	85.2	51.6	46.9	48.0	58.6	80.9	48.7	62.7	85.2
14'-0"	4'-0"	66.0	63.9	90	90	74.6	67.9	69.4	84.7	90	70.5	90	90
	4'-3"	62.1	60.2	85.3	90	70.2	63.9	65.3	79.7	90	66.4	85.3	90
	4'-6"	58.7	56.8	80.5	90	66.3	60.3	61.7	75.3	90	62.7	80.6	90

NOTE: MULLION SPAN "L" FOR A GIVEN MULLION DIMENSION "b" SHALL NOT EXCEED MAXIMUN VALUES INDICATED ON SCHEDULE ON SHEET 21

WALTER A. TILLIT JR., P.E.
STRUCTURAL ENGINEER
FL. LIC.NO. 44167

TILTECO INC.

TILLIT TESTING & ENGINEERING COMPANY
6355 NW 36th STREET, STE. 305
MIAMI, FLORIDA 33166
FL E.B. LICENSE No. 0006719

APR 12 2006

PRODUCT REVISED
as complying with the Florida Building Code
Acceptance No. 06-0306.03
Expiration Date 03/04/11
By
Miami-Dade Product Control Section

RESERVED FOR METRO-DADE USE ONLY

YKK AP America
YKK AP AMERICA, INC.
5630 GWALTNEY DRIVE
ATLANTA, GEORGIA 30336

SYSTEM RESERVED FOR METRO-DADE USE ONLY YHC 300 SINGLE GLAZING SYSTEM	SCALE 1/2
DESCRIPTION ANCHOR BOLT GUIDE -SINGLE SPAN-	
DRAWING NUMBER YHC-300-OG-SS	REV.
APPROVED BY: JIA / DRAWN BY: I.A. / DATE: 2/28/06	SHEET NO. 22B OF 24

G:\SYSDWGS\YHC3000G\DADE\SINGLE\SMALLMISSILE\YHC300p22Bss.DWG

REV.	DESCRIPTION	BY	DATE
A	CONDITIONS 1 TO 8 & NEW 1A/5A.	I.A	2/28/06
	+ ANCHOR BOLT SCHEDULE.		
B	ANCHOR "F" MIN. E.D. & SPACING	L.G.	4/7/06

YHC 300 O/G TWIN SPAN

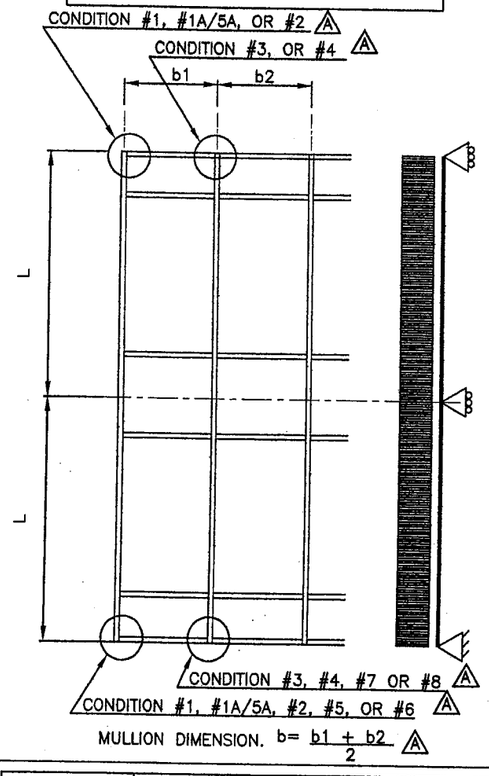

ANCHOR BOLT SCHEDULE A

ALL ANCHOR BOLTS SHALL BE INSTALLED STRICTLY FOLLOWING THE ANCHOR MANUFACTURER'S SPECS AND RECOMMENDATION.

ANCHOR BOLT TYPE	DIAMETER & MODEL NAME	MANUFACTURER	Min. EDGE DISTANCE	Min. EMBEDMENT	Min. SPACING	SUBSTRATE
"A"	1/2"ø KWIK BOLT 3	HILTI, INC	3 3/8"	2 1/4"	3" O.C.	f'c=3ksi CONCRETE
"B"	1/2"ø HVA W/ SUPER HAS ROD	HILTI, INC	3"	4 1/4"	3" O.C.	f'c=3ksi CONCRETE
"A1"	1/2"ø KWIK BOLT 3	HILTI, INC	3 3/8"	2 1/4"	3 3/8"	f'c=3ksi CONCRETE
"B1"	1/2"ø HVA W/ SUPER HAS ROD	HILTI, INC	3"	4 1/4"	3 3/8"	f'c=3ksi CONCRETE
"C"	5/8"ø POWER BOLT	POWERS FASTENERS,INC	5"	4"	7 1/2" O.C.	f'c=3ksi CONCRETE
"D"	1/2"ø HVA W/ SUPER HAS ROD	HILTI, INC	5"	4 1/4"	7 1/2" O.C.	f'c=3ksi CONCRETE
"E"	1/2"ø POWER BOLT	POWERS FASTENERS,INC	3 1/2"	4"	7 1/2" O.C.	f'c=3ksi CONCRETE
"F"	1/2"ø BOLT W/ NUT & WASHERS	GRADE 5 STEEL *	B 1"	N/A	B 3" O.C.	1/4" Min. STEEL

* SHALL COMPLY W/ DIN 50018.

TILTECO INC.

TILLIT TESTING & ENGINEERING COMPANY
6355 NW 36th STREET, STE. 305
MIAMI, FLORIDA 33166
FL E.B. LICENSE No. 0006719

CONDITION #8 A

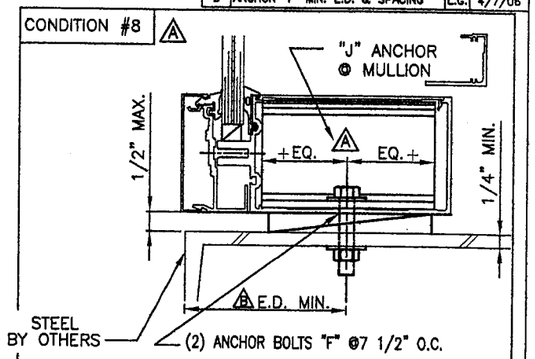

CONDITION #7 A

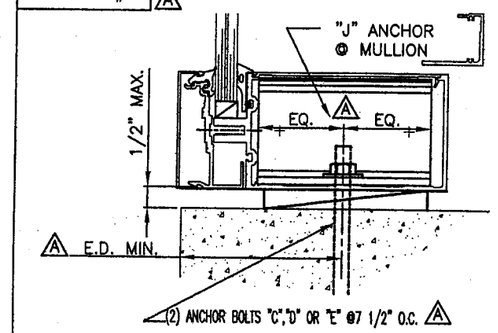

CONDITION #1 A

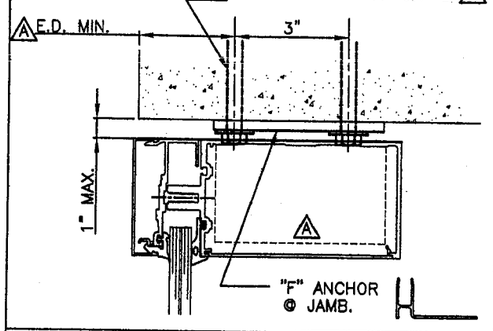

CONDITION #1A/5A A

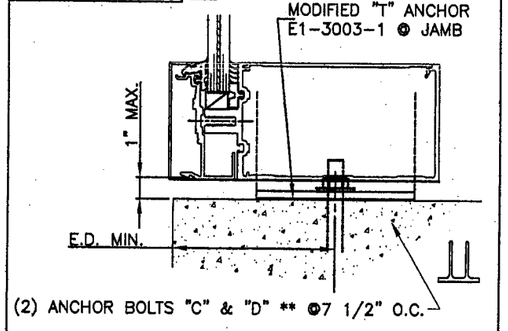

CONDITION #6 A

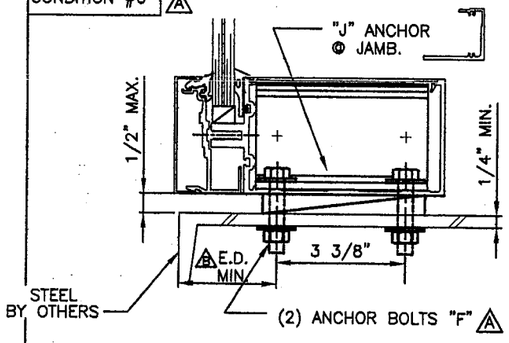

CONDITION #2 A

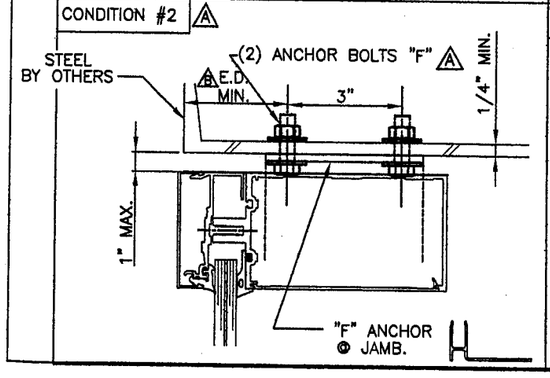

CONDITION #3 A

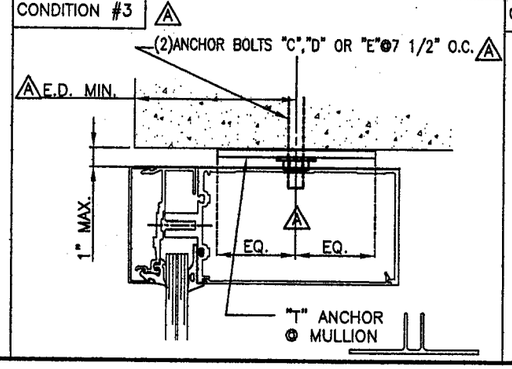

CONDITION #4 A

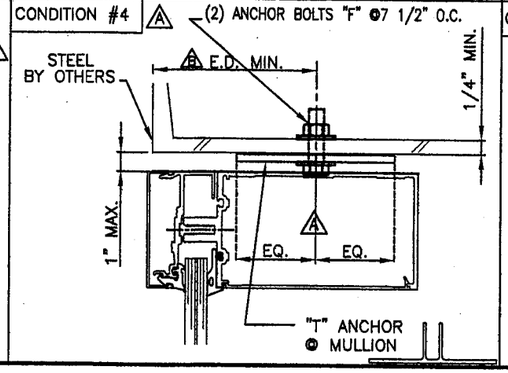

CONDITION #5 A

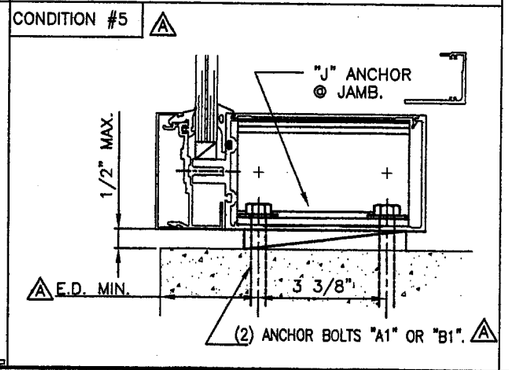

WALTER A. TILLIT JR., P.E.
STRUCTURAL ENGINEER
FL. LIC.NO. 44167

APR 12 2006

PRODUCT REVISED
as complying with the Florida Building Code
Acceptance No. 06-0306.03
Expiration Date 03/04/11
By
Miami-Dade Product Control Division

RESERVED FOR METRO-DADE USE ONLY

YKK ap America
YKK AP AMERICA, INC.
5630 GWALTNEY DRIVE
ATLANTA, GEORGIA 30336

SYSTEM	SCALE
YHC 300 SINGLE GLAZING SYSTEM	1/2
DESCRIPTION: ANCHOR BOLT GUIDE -TWIN SPAN-	
DRAWING NUMBER: YHC-300-OG-SS	REV. A

APPROVED BY	DRAWN BY	DATE	SHEET NO.
JIA	JIA	2/28/06	23 OF 24

G:\SYSDWGS\YHC300OG\DADE\SINGLE\SMALLMISSILE\YHC300p23ss.DWG

REV.	DESCRIPTION	BY	DATE

ANCHOR BOLT'S PRESSURE RATING : TWIN SPAN

MULLION SPAN "L"	MULLION DIMENS. "b"	DESIGN LOAD OF ANCHOR BOLTS (psf) POSITIVE OR NEGATIVE											
		CONDITION # 1		CONDITION # 3			CONDITION # 5		CONDITION # 7			CONDITION # 1A/5A	
		OPTIONAL ANCHOR BOLTS TYPE											
		A	B	C	D	E	A1	B1	C	D	E	C	D
8'-6"	6'-0"	90	90	90	90	90	90	90	90	90	90	90	90
9'-0"	5'-9"	90	90	90	90	90	90	90	90	90	90	90	90
	6'-0"	90	88.4	90	90	90	90	90	90	90	90	90	90
9'-6"	5'-6"	90	90	90	90	90	90	90	90	90	90	90	90
	5'-9"	90	87.4	90	90	90	90	90	90	90	90	90	90
	6'-0	86.5	83.7	90	90	90	89.1	89.1	90	90	90	90	90
10'-0"	5'-3"	90	90	90	90	90	90	90	90	90	90	90	90
	5'-6"	89.6	86.8	90	90	90	90	90	90	90	90	90	90
	5'-9"	85.7	83.0	90	90	90	88.1	90	90	90	90	90	90
	6'-0"	82.1	79.6	90	90	90	84.4	86.4	90	90	87.9	90	90
10'-6"	5'-0"	90	90	90	90	90	90	90	90	90	90	90	90
	5'-3"	89.4	86.6	90	90	90	90	90	90	90	90	90	90
	5'-6"	85.3	82.7	90	90	90	87.7	89.8	90	90	90	90	90
	5'-9"	81.6	79.1	90	90	90	83.9	85.9	90	90	87.2	90	90
	6'-0"	78.2	75.8	90	90	88.4	80.4	82.3	90	90	83.6	90	90
11'-0"	4'-9"	90	90	90	90	90	90	90	90	90	90	90	90
	5'-0"	89.6	86.8	90	90	90	90	90	90	90	90	90	90
	5'-3"	85.3	82.7	90	90	90	87.7	89.8	90	90	90	90	90
	5'-6"	81.5	78.9	90	90	90	83.7	85.7	90	90	87.0	90	90
	5'-9"	77.9	75.5	90	90	88	80.1	82.0	90	90	83.2	90	90
	6'-0"	74.7	72.3	90	90	84.4	76.8	78.5	90	90	74.8	90	90
11'-6"	4'-9"	90	87.4	90	90	90	90	90	90	90	90	90	90
	5'-0"	85.7	83.0	90	90	90	88.1	90	90	90	90	90	90
	5'-3"	81.6	79.1	90	90	90	83.9	85.9	90	90	87.2	90	90
	5'-6"	77.9	75.5	90	90	88.0	80.1	82.0	90	90	83.2	90	90
	5'-9"	74.5	72.2	90	90	84.2	76.6	78.4	90	90	79.6	90	90
	6'-0"	71.4	69.2	90	90	80.7	73.4	75.1	90	90	76.3	90	90
12'-0"	4'-6"	90	88.4	90	90	90	90	90	90	90	90	90	90
	4'-9"	86.5	83.7	90	90	90	88.9	90	90	90	90	90	90
	5'-0"	82.1	79.6	90	90	90	84.4	86.4	90	90	87.7	90	90
	5'-3"	78.2	75.8	90	90	88.4	80.4	82.3	90	90	83.6	90	90
	5'-6"	74.7	72.3	90	90	84.4	76.8	78.5	90	90	79.8	90	90
	5'-9"	71.4	69.2	90	90	80.7	73.4	75.1	90	90	76.3	90	90
	6'-0"	68.4	66.3	90	90	77.3	70.4	72.0	89.9	90	73.1	90	90
12'-6"	4'-3"	90	89.9	90	90	90	95.4	90	90	90	90	90	90
	4'-6"	87.6	84.9	90	90	90	90.1	90	90	90	90	90	90
	4'-9"	83.0	80.4	90	90	90	85.3	87.3	90	90	88.7	90	90
	5'-0"	78.8	76.4	90	90	89.1	81.1	82.9	90	90	84.2	90	90
	5'-3"	75.1	72.7	90	90	84.8	77.2	79.0	90	90	80.2	90	90
	5'-6"	71.7	69.4	90	90	81.0	73.7	75.4	90	90	76.6	90	90
	5'-9"	68.6	66.4	90	90	77.5	70.5	72.1	88.0	90	73.2	90	90
	6'-0"	65.7	63.6	90	90	74.2	67.6	69.1	84.3	90	70.2	90	90

MULLION SPAN "L"	MULLION DIMENS. "b"	DESIGN LOAD OF ANCHOR BOLTS (psf) POSITIVE OR NEGATIVE											
		CONDITION # 1		CONDITION # 3			CONDITION # 5		CONDITION # 7			CONDITION # 1A/5A	
		OPTIONAL ANCHOR BOLTS TYPE											
		A	B	C	D	E	A1	B1	C	D	E	C	D
13'-0"	4'-0"	90	90	90	90	90	97.4	90	90	90	90	90	90
	4'-3"	89.2	86.4	90	90	90	91.7	90	90	90	90	90	90
	4'-6"	84.2	81.6	90	90	90	86.6	88.6	90	90	90	90	90
	4'-9"	79.8	77.3	90	90	90	82.2	84.0	90	90	85.2	90	90
	5'-0"	75.8	73.4	90	90	85.7	77.9	79.8	90	90	81.0	90	90
	5'-3"	72.2	69.9	90	90	81.6	74.2	76.0	90	90	77.1	90	90
	5'-6"	68.9	66.8	90	90	77.9	70.9	72.5	88.5	90	73.6	90	90
	5'-9"	65.9	63.9	90	90	74.5	67.8	69.4	84.6	90	70.4	90	90
	6'-0"	63.2	61.2	86.7	90	71.4	65.0	66.5	81.1	90	67.5	86.8	90
13'-6"	4'-0"	90	88.4	90	90	90	90	90	90	90	90	90	90
	4'-3"	85.9	83.2	90	90	90	88.3	90	90	90	90	90	90
	4'-6"	81.1	78.6	90	90	90	83.4	85.3	90	90	86.7	90	90
	4'-9"	76.8	74.4	90	90	86.8	79.0	80.8	90	90	82.1	90	90
	5'-0"	73.0	70.7	90	90	82.5	75.1	76.8	90	90	78.0	90	90
	5'-3"	69.5	67.3	90	90	78.6	71.5	73.1	89.2	90	74.3	90	90
	5'-6"	66.4	64.3	87.2	90	75.0	68.2	69.8	85.2	90	70.9	90	90
	5'-9"	63.5	61.5	83.5	90	71.7	65.3	66.8	81.5	90	67.8	87.2	90
	6'-0"	60.8	58.9	90	90	68.7	62.6	64.0	78.1	90	65.0	83.6	90
14'-0"	3'-9"	90	90	90	90	90	90	90	90	90	90	90	90
	4'-0"	88.0	85.2	90	90	90	90	90	90	90	90	90	90
	4'-3"	82.8	80.2	90	90	90	85.2	87.1	90	90	88.5	90	90
	4'-6"	78.2	75.8	90	90	88.4	80.4	82.3	90	90	83.6	90	90
	4'-9"	74.1	71.8	90	90	83.7	76.2	78.0	90	90	79.2	90	90
	5'-0"	70.4	68.2	90	90	79.5	72.4	74.1	90	90	75.2	90	90
	5'-3"	67.0	64.9	90	90	75.8	68.9	70.5	86.1	90	71.6	90	90
	5'-6"	64.0	62.0	89.9	90	72.3	65.8	67.3	82.1	90	68.4	87.9	90
	5'-9"	61.2	59.3	84	90	69.2	62.9	64.4	78.6	90	65.4	84.1	90
	6'-0"	58.7	56.8	80.5	90	66.3	60.3	61.7	75.3	90	62.7	80.6	90

PRODUCT REVISED
as complying with the Florida Building Code
Acceptance No. 06-0306.03
Expiration Date 02/09/11
By
Miami Dade Product Control Division

TILTECO INC.

TILLIT TESTING & ENGINEERING COMPANY
6355 NW 36th STREET, STE. 305
MIAMI, FLORIDA 33166
FL E.B. LICENSE No. 0006719

NOTE: MULLION SPAN "L" FOR A GIVEN MULLION DIMENSION "b" SHALL NOT EXCEED MAXIMUN VALUES INDICATED ON SCHEDULE ON SHEET 21

APR 12 2006

WALTER A. TILLIT JR., P.E.
STRUCTURAL ENGINEER
FL. LIC.NO. 44167

RESERVED FOR METRO-DADE USE ONLY

YKK AP America
YKK AP AMERICA, INC.
5630 GWALTNEY DRIVE
ATLANTA, GEORGIA 30336

SYSTEM	SCALE
YHC 300 SINGLE GLAZING SYSTEM	1/2

DESCRIPTION: ANCHOR BOLT GUIDE -TWIN SPAN-

DRAWING NUMBER	REV.
YHC-300-OG-SS	

APPROVED BY	DRAWN BY	DATE	SHEET NO.
JIA	I.A	2/28/06	23A OF 24

G:\SYSDWGS\YHC300OG\DADE\SINGLE\SMALLMISSILE\YHC300p23Ass.DWG

REV.	DESCRIPTION	BY	DATE
A	NO CHANGE THIS SHEET	I.A.	2/28/06
B	ASTM E 1300-98	L.G.	4/7/06

MAXIMUM DESIGN WIND LOAD "W" (psf) SCHEDULE FOR A GIVEN GLASS TYPE AND GLASS PANEL DIMENSIONS WIDTH "b" (in) x LENGTH "a" (in)

GLASS TYPES "P1" & "P2"

WIDTH "b"	LENGTH "a"	MAXIMUM DESIGN LOAD "W"
24"	from 24" to 120"	±90.0
30"	from 30" to 120"	±90.0
36"	from 36" to 120"	±90.0
42"	from 42" to 120"	±90.0
48"	from 48" to 112"	±90.0
54"	from 54" to 100"	±90.0
60"	from 60" to 84"	±90.0
	90"	±85.5
66"	from 66" to 78"	±90.0
	82"	±88.5
72"	from 72" to 75"	±90.0

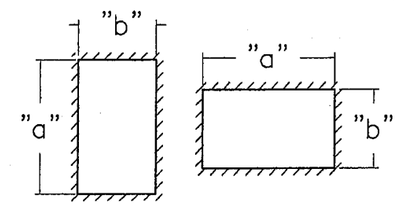

a ≥ b ALWAYS

GLASS PANEL SCHEDULE LEGEND

DIM. a & b REFER TO D.L.O. ON SHOP DRAWINGS.

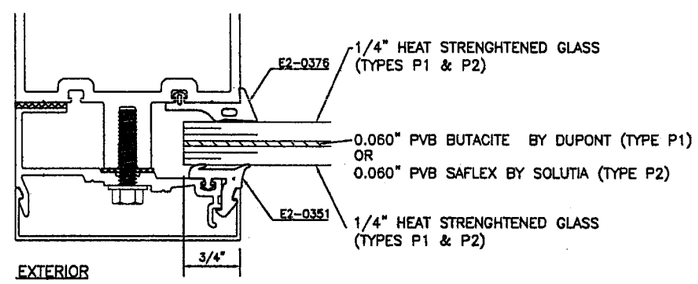

JAMB/HORIZONTAL

GLAZING DETAIL

FOR GLASS TYPES "P1", "P2"

B ASTM E 1300-98

WALTER A. TILLIT JR., P.E.
STRUCTURAL ENGINEER
FL. LIC.NO. 44167

APR 12 2006

TILLECO INC.

TILLIT TESTING & ENGINEERING COMPANY
6355 NW 36th STREET, STE. 305
MIAMI, FLORIDA 33166
FL E.B. LICENSE No. 0006719

PRODUCT REVISED
as complying with the Florida Building Code
Acceptance No. 06-0306.03
Expiration Date 03/04/14
By
Miami-Dade Product Control Division

RESERVED FOR METRO-DADE USE ONLY

YKK ap America

YKK AP AMERICA, INC.
5630 GWALTNEY DRIVE
ATLANTA, GEORGIA 30336

SYSTEM	SCALE
YHC 300 SINGLE GLAZING SYSTEM	1/2

DESCRIPTION: GLASS CAPACITY CHARTS

DRAWING NUMBER	REV.
YHC-300-OG-SS	A

APPROVED BY	DRAWN BY	DATE	SHEET NO.
JIA	JIA	8/5/02	24 OF 24

G:\SYSDWGS\YHC3000G\DADE\SINGLE\LARGEMISSILE\YHC300p24ss.DWG