MIAMI-DADE

BUILDING CODE COMPLIANCE OFFICE (BCCO)
PRODUCT CONTROL DIVISION

MIAMI-DADE COUNTY, FLORIDA
METRO-DADE FLAGLER BUILDING
140 WEST FLAGLER STREET, SUITE 1603
MIAMI, FLORIDA 33130-1563
(305) 375-2901 FAX (305) 375-2908

# NOTICE OF ACCEPTANCE (NOA)

**Southern Metal Products, LLC.**
**D/B/A Aeicor Metal Products**
**450 West McNab Road**
**Fort Lauderdale, FL. 33309**

## SCOPE:

This NOA is being issued under the applicable rules and regulations governing the use of construction materials. The documentation submitted has been reviewed by Miami-Dade County Product Control Division and accepted by the Board of Rules and Appeals (BORA) to be used in Miami Dade County and other areas where allowed by the Authority Having Jurisdiction (AHJ).

This NOA shall not be valid after the expiration date stated below. The Miami-Dade County Product Control Division (In Miami Dade County) and/or the AHJ (in areas other than Miami Dade County) reserve the right to have this product or material tested for quality assurance purposes. If this product or material fails to perform in the accepted manner, the manufacturer will incur the expense of such testing and the AHJ may immediately revoke, modify, or suspend the use of such product or material within their jurisdiction. BORA reserves the right to revoke this acceptance, if it is determined by Miami-Dade County Product Control Division that this product or material fails to meet the requirements of the applicable building code.

This product is approved as described herein, and has been designed to comply with the High Velocity Hurricane Zone of the Florida Building Code.

**DESCRIPTION: Aeicor SS-1-14 & SS-1-20 Standing Seam Metal Roof Panel**

**LABELING:** Each unit shall bear a permanent label with the manufacturer's name or logo, city, state and following statement: "Miami-Dade County Product Control Approved", unless otherwise noted herein.

**RENEWAL** of this NOA shall be considered after a renewal application has been filed and there has been no change in the applicable building code negatively affecting the performance of this product.

**TERMINATION** of this NOA will occur after the expiration date or if there has been a revision or change in the materials, use, and/or manufacture of the product or process. Misuse of this NOA as an endorsement of any product, for sales, advertising or any other purposes shall automatically terminate this NOA. Failure to comply with any section of this NOA shall be cause for termination and removal of NOA.

**ADVERTISEMENT:** The NOA number preceded by the words Miami-Dade County, Florida, and followed by the expiration date may be displayed in advertising literature. If any portion of the NOA is displayed, then it shall be done in its entirety.

**INSPECTION:** A copy of this entire NOA shall be provided to the user by the manufacturer or its distributors and shall be available for inspection at the job site at the request of the Building Official.

This renews NOA #01-0605.05 and consists of pages 1 through 4.
The submitted documentation was reviewed by Alex Tigera.

## ROOFING SYSTEM APPROVAL

| | |
|---|---|
| **Category:** | Roofing |
| **Sub-Category:** | Non-Structural Metal Panels |
| **Material:** | Steel |
| **Maximum Design Pressure** | -45psf. |

## TRADE NAMES OF PRODUCTS MANUFACTURED OR LABELED BY APPLICANT:

| Product | Dimensions | Test Specifications | Product Description |
|---|---|---|---|
| SS-1-14 and SS-1-20 | Length: various<br>Width:13 $^{7}/_{8}$" and 19 $^{7}/_{8}$"<br>Thickness: 0.0276" | TAS 110 | Corrosion resistant, galvalume, performed, standing seam, coated, pre-finished, metal panels. |
| Panel Clips | Length :1½"<br>Height: 1 $^{5}/_{8}$"<br>Width: 1"<br>Thickness: 0.021" | TAS 110 | Corrosion resistant, formed, plated steel clips for metal panel installation. |
| Trim Pieces | Length: varies<br>Width: varies<br>Thickness: 0.0276" | TAS 110 | Standard flashing and trim pieces, corrosion resistant galvalume. |

## EVIDENCE SUBMITTED

| Test Agency | Test Identifier | Test Name/Report | Date |
|---|---|---|---|
| Construction Research Laboratory, Inc. | 6176M | Uplift Pressure Testing<br>ASTM E 330<br>(14" Wide Panels Direct Deck with no Insulation) | May 1995 |
| Lilly Industries, Inc. | Technical Literature | Salt Spray<br>ASTM B 117 | Sept. 1993 |
| Lilly Industries, Inc. | Technical Literature | Accelerated Weathering<br>ASTM G 23 | Sept. 1993 |
| C.R.L. | Test # 5823 | TAS 100 | May 1993 |
| Hurricane Test Laboratory, Inc. | HETI 95-T82 | ASTM E 8 | May 1995 |
| Celotex Corp. | # 258524A | TAS 100-95 | June 1998 |
| Hurricane Test Laboratory, Inc. | #0154-0616-98 | TAS 125 | June 1998 |

## APPROVED ASSEMBLIES

| | |
|---|---|
| **SYSTEM:** | SS-1-14, SS-1-20 Mechanically Seamed Panels |
| **Deck Type:** | Wood, Non-insulated |
| **Deck Description:** | New Construction<br>$^{19}/_{32}$" or greater plywood or wood plank. |
| **Slope Range:** | 2":12" or greater |
| **Maximum Uplift Pressure:** | The maximum allowable uplift pressure for the 13 $^{7}/_{8}$" and 19 $^{7}/_{8}$" wide panels shall be –45 psf. |
| **Deck Attachment:** | In accordance with applicable building code, but in no case shall it be less than # 8 x 2" long screws spaced 6" o.c. In reroofing, where the deck is less than $^{19}/_{32}$" thick (Minimum $^{15}/_{32}$") The above attachment method must be in addition to existing attachment. |
| **Underlayment:** | Minimum underlayment shall be an ASTM D 226 Type II installed with a minimum 4" side-lap and 6" end laps. Underlayment shall be fastened with corrosion resistant tin-caps and 1 ¼ annular ring-shank nails, spaced 6" o.c. at all laps and two staggered rows 12" o.c. in the field of the roll. |
| **Panel Clips:** | Panels shall be installed with approved clips, attached to substrate with one corrosion resistant #8-14 screw of sufficient length to penetrate through the sheathing $^{3}/_{16}$" at a maximum spacing not to exceed 8" o.c. |
| **Valleys:** | Valley construction shall be in compliance with Roofing Application Standard RAS 133 and with the current published installation instructions and details in Aeicor Metal Roofing Installation Manual. |
| **Fire Barrier Board:** | For class A or B fire rating, install minimum ¼" thick Georgia Pacific "Dens Deck (with current NOA) or minimum 4mm thick of Tritex, Rockroof or (with current NOA) or $^{5}/_{8}$" water resistant type X gypsum sheathing with treated core and facer. |
| **Metal Panels and Accessories:** | Install the "SS-1-14 and SS-1-20 Mechanically Seamed Panel" and accessories in compliance with the current published installation instructions and details in Aeicor Metal Roofing Installation Manual. Flashings, penetrations, valley construction and other details shall be constructed in compliance Roofing Application Standard RAS 133. |

## SYSTEM LIMITATIONS

1. The maximum design pressure limitation listed herein shall be applicable to all roof pressure zones (i.e. field, perimeters, and corners). Neither rational analysis, nor extrapolation shall be permitted for enhanced fastening at enhanced pressure zones (i.e. perimeters, and corners).

2. Panels shall be roll formed in continuous lengths from eave to ridge. Maximum lengths shall be as described in Miami-Dade County Roofing Application Protocol RAS 133.

3. All panels shall be permanently labeled with the manufacturer's name and/or logo, and the following statement: "Miami-Dade County Product Control Approved. All clips shall be permanently labeled with manufacturer's name and/or logo, and/or model.

## PROFILE DRAWINGS

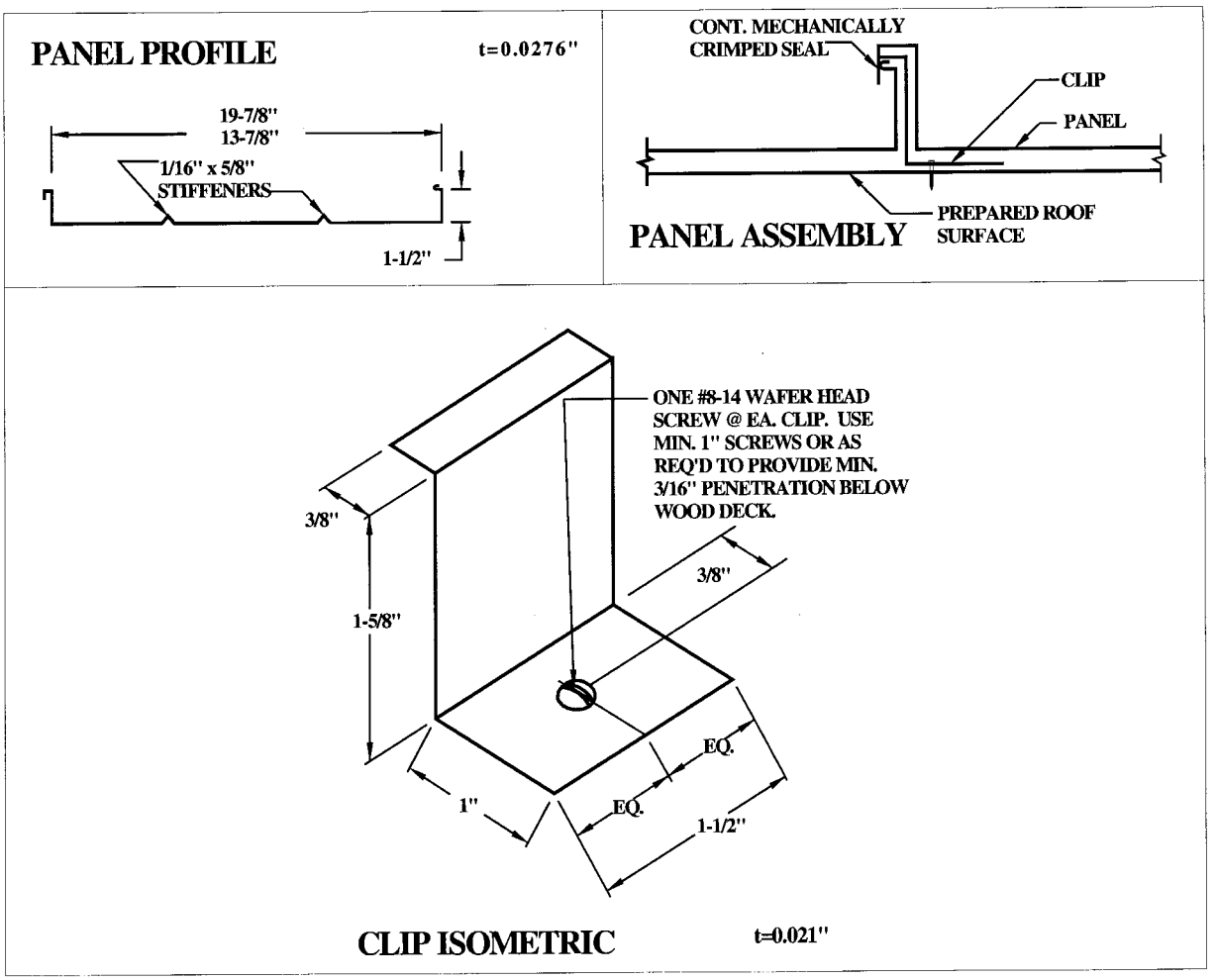


**AEICOR SS-1-14, AEICOR SS-1-20 PANEL AND ATTACHMENT CLIP**

**END OF THIS ACCEPTANCE**