MIAMI-DADE

BUILDING CODE COMPLIANCE OFFICE (BCCO)
PRODUCT CONTROL DIVISION

MIAMI-DADE COUNTY, FLORIDA
METRO-DADE FLAGLER BUILDING
140 WEST FLAGLER STREET, SUITE 1603
MIAMI, FLORIDA 33130-1563
(305) 375-2901 FAX (305) 375-2908

NOTICE OF ACCEPTANCE (NOA)

Southern Metal Products, LLC.
D/B/A Aeicor Metal Products
450 West McNab Road
Ft. Lauderdale, FL. 33309

SCOPE:
This NOA is being issued under the applicable rules and regulations governing the use of construction materials. The documentation submitted has been reviewed by the BCCO and accepted by the Building Code and Product Review Committee to be used in Miami Dade County and other areas where allowed by the Authority Having Jurisdiction (AHJ).

This NOA shall not be valid after the expiration date stated below. The BCCO (In Miami Dade County) and/or the AHJ (in areas other than Miami Dade County) reserve the right to have this product or material tested for quality assurance purposes. If this product or material fails to perform in the accepted manner, the manufacturer will incur the expense of such testing and the AHJ may immediately revoke, modify, or suspend the use of such product or material within their jurisdiction. BCCO reserves the right to revoke this acceptance, if it is determined by BCCO that this product or material fails to meet the requirements of the applicable building code.

This product is approved as described herein, and has been designed to comply with the South Florida Building Code, 1994 Edition for Miami-Dade County or Florida Building Code.

DESCRIPTION: 1" Snap Cap-Metal Roofing System

RENEWAL of this NOA shall be considered after a renewal application has been filed and there has been no change in the applicable building code negatively affecting the performance of this product.

TERMINATION of this NOA will occur after the expiration date or if there has been a revision or change in the materials, use, and/or manufacture of the product or process. Misuse of this NOA as an endorsement of any product, for sales, advertising or any other purposes shall automatically terminate this NOA. Failure to comply with any section of this NOA shall be cause for termination and removal of NOA.

ADVERTISEMENT: The NOA number preceded by the words Miami-Dade County, Florida, and followed by the expiration date may be displayed in advertising literature. If any portion of the NOA is displayed, then it shall be done in its entirety.

INSPECTION: A copy of this entire NOA shall be provided to the user by the manufacturer or its distributors and shall be available for inspection at the job site at the request of the Building Official.

This NOA renews and revises NOA No. 01-0820.02 and consists of pages 1 through 5.
The submitted documentation was reviewed by Jorge L. Acebo

PRODUCT CONTROL ACCEPTED

ROOFING ASSEMBLY APPROVAL

Category: Roofing
Sub-Category: Non-Structural Metal Roofing
Material: Steel
Maximum Design Pressure: **-97.5 psf.**

TRADE NAMES OF PRODUCTS MANUFACTURED OR LABELED BY APPLICANT

Product	Dimensions	Test Specifications	Product Description
SS-4-12 Snap Cap	Length: various Height: $^5/_8$" Width : 12 ¾" Thickness 0.0276		Corrosion resistant, galvalume, preformed, standing seam, coated, pre-finished, metal panels.
CP-4-12 Snap Cap	Length: various Height: $^5/_8$" Width: 12 ¾" Thickness 0.0276		Corrosion resistant, galvalume, preformed, curved coated, pre-finished, metal panels.
Trim Pieces	Length: varies Width: varies Thickness 0.0276		Standard flashing and trim pieces, corrosion resistant galvalume.
Panel Clips	Length: 2" Height: ¾" Width: 1" Thickness 0.019		Corrosion resistant, formed, plated steel clips for metal panel installation

EVIDENCE SUBMITTED

Test Agency	Test Identifier	Test Name/Report	Date
Construction Research Laboratory, Inc.	6176A	Uplift Pressure Testing ASTM E 330 (12" Wide Panels Direct Deck with no Insulation)	March 1995
Lilly Industries, Inc.	Technical Literature	Salt Spray ASTM B 117	Sept. 1993
Lilly Industries, Inc.	Technical Literature	Accelerated Weathering ASTM G 23	Sept. 1993
C.R.L.	Test # 5772	TAS 100	March 1993
Hurricane Test Laboratory, Inc.	#0154-1211-97	TAS 125	January 1998
Celotex Corp.	# 258340	TAS 100	December 1997
Hurricane Test Laboratory, Inc.	#0154-0612-01	TAS 125	June 2001
	#0154-1016-05	TAS 125	02/09/06

SYSTEM APPROVAL:

System:	SS-4-12 Snap Cap & CP-4-12
Deck Type:	Wood, Non-insulated
Deck Description:	New Construction $^{19}/_{32}$" or greater plywood or wood plank.
Slope Range:	2": 12" or greater
Maximum Uplift Pressure:	**See Table A below. (See General Limitation #1)**
Deck Attachment:	In accordance with applicable building code, but in no case shall it be less than # 8 x 2" long screws spaced 6" O.C. In re-roofing, where the deck is less than $^{19}/_{32}$" thick (Minimum $^{15}/_{32}$") the above attachment method must be in addition to existing attachment. (See footnote 1. in Table A below)
Underlayment:	Minimum underlayment shall be an ASTM D 226 Type II installed with a minimum 4" side-lap and 6" end-laps. Underlayment shall be fastened with corrosion resistant tin-caps and 1 ¼" annular ring-shank nails, spaced 6" o.c. at all laps and two staggered rows 12" o.c. in the field of the roll.
Panel Clips:	Panels shall be installed with approved clips, attached to substrate with one corrosion resistant #8-14 screws of sufficient length to penetrate through the sheathing $^{3}/_{16}$" at a maximum spacing listed in **Table A** below. Once the clips are secured in place, the clip tabs are folded over and the snap cap is applied along the full length of the seam.
Valleys:	Valley construction shall be in compliance with RAS 133 and with the current published installation instructions and details in Aeicor Metal Roofing Installation Manual.
Fire Barrier Board:	For class A or B fire rating, install minimum ¼" thick Georgia Pacific "Dens Deck" (with current NOA) or minimum 4mm thick of Tritex, RocRoof (with current NOA) or $^{5}/_{8}$" water resistant type X gypsum sheathing with treated core and facer or a single layer of 0.015" thick VersaShield (with current NOA).
Metal Panels and Accessories:	Install the "SS-4-12 Snap Cap Panel & CP-4-12" and accessories in compliance with the current published installation instructions and details in Aeicor Metal Roofing Installation Manual. Flashing, penetrations, valley construction and other details shall be constructed in compliance with RAS 133.

Table A

	Maximum Design Pressure	
	Field	**Perimeter and Corner[1]**
Maximum Design Pressure	**-85 psf.**	**-99.25 psf.**
Maximum Panel Clip Spacing	**12" o.c.**	**4" o.c.**

1. Extrapolation shall not be allowed
Minimum Deck Thickness 19/32' and attached with 8d ring shank nails spaced 4" o.c. to structural supports.

System: SS-4-12 Snap Cap & CP-4-12

Deck Type: Steel, Non-insulated

Deck Description: New Construction 22 ga. type B steel roof deck.

Slope Range: 2": 12" or greater

Maximum Uplift Pressure: The maximum allowable uplift pressure for the 12- ¾ "wide panel shall be **–97.5 psf. (See General Limitation #2)**

Deck Attachment: Minimum 22 gage type B steel deck fastened to steel supports at a maximum span of 5 feet o.c. Steel deck shall be fastened with minimum $^{5}/_{16}$" puddle welds with 1 $^{7}/_{8}$" weld washer at a maximum spacing of 6"o.c. Side laps shall be fastened with #10 x ¾" HH TEK screws.

Fire Barrier Board: ¼" Dens Deck fastens to steel deck with approved insulation fasteners & 3" steel plate at a density of 1:4ft in accordance with RAS 117.

For class A or B fire rating, install minimum ¼" thick Georgia Pacific "Dens Deck" (with current NOA) Insulation shall be attached to decking with Insta-Stik Roofing adhesive ¾" to 1" minimum wide beads of adhesive space 12" o.c.

Underlayment: A single layer of any Miami Dade County Product Control Approved self-adhered with a 4" overlap is fully adhered to Dens Deck.
Or
An ASTM D 226 type II installed with a minimum 4" side-lap and 6" en-laps. Underlayment fastened with approved insulation fasteners and plates. Spaced 12" o.c. on the laps and two rows spaced 24" o.c. in the field of roll.

Panel Clips: Panels shall be installed with approved clips, attached to substrate with one corrosion resistant #8 Wafer Head TEK screws of sufficient length to penetrate the bottom flute a minimum of ¾"at a maximum spacing of 6 inches o.c. Once the clips are secured in place, the clip tabs are folded over and the snap cap is applied along the full length of the seam.

Valleys: Valley construction shall be in compliance with RAS 133 and with the current published installation instructions and details in Aeicor Metal Roofing Installation Manual.

Metal Panels and Accessories: Install the "SS-4-12 Snap Cap Panel & CP-4-12" and accessories in compliance with the current published installation instructions and details in Aeicor Metal Roofing Installation Manual. Flashings, penetrations, valley construction and other details shall be constructed in compliance with RAS 133.

SYSTEM LIMITATIONS

1. Neither rational analysis, nor extrapolation shall be permitted for the maximum design pressures listed in the "Perimeter and Corner" roof areas as noted in the Approved Assembly herein.
2. The maximum designed pressure limitation listed shall be applicable to all roof pressure zones (i.e. field, perimeters, and corners). Neither rational analysis, nor extrapolation shall be permitted for enhanced fastening at enhanced pressure zones (i.e. perimeters, extended corners and corners). The maximum fastener spacing noted in the "Systems Description" section of this approval shall not be exceeded.
3. Fire classification is not part of this acceptance; refer to current Approved Roofing Materials Directory for fire ratings of this product.
4. Panels shall be roll formed in continuous lengths from eave to ridge. Maximum lengths shall be as described in Roofing Application Protocol RAS 133.
5. All panels shall be permanently labeled with the manufacturer's name and/or logo, and the following statement: "Miami-Dade County Product Control Approved. All clips shall be permanently labeled with manufacturer's name, and/or logo, and/or model.

PROFILE DRAWINGS

AEICOR SS-4-12 & CP-4-12 PANEL AND ATTACHMENT CLIP

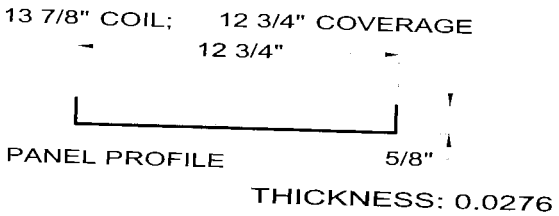

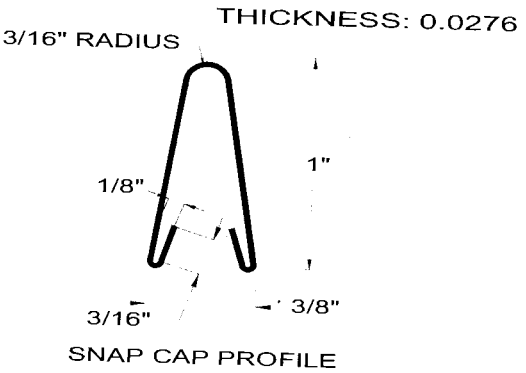

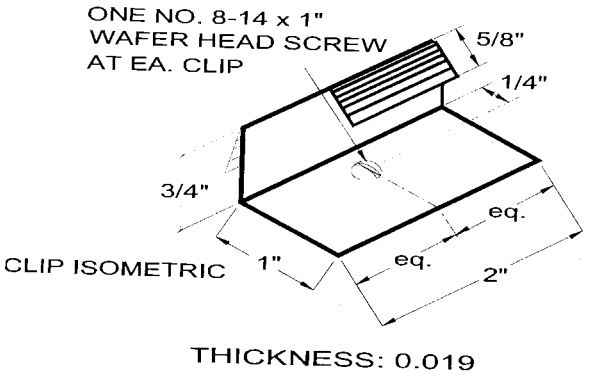

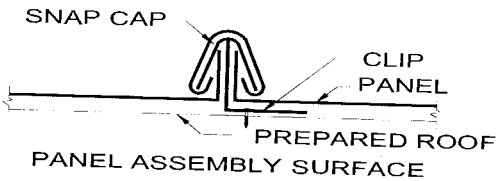

END OF THIS ACCEPTANCE