MIAMI-DADE COUNTY

BUILDING CODE COMPLIANCE OFFICE (BCCO)
PRODUCT CONTROL DIVISION

MIAMI-DADE COUNTY, FLORIDA
METRO-DADE FLAGLER BUILDING
140 WEST FLAGLER STREET, SUITE 1603
MIAMI, FLORIDA 33130-1563
(305) 375-2901 FAX (305) 375-2908
www.buildingcodeonline.com

NOTICE OF ACCEPTANCE (NOA)

Gamma USA
15407 West Dixie Highway
North Miami Beach, FL 33162

SCOPE:

This NOA is being issued under the applicable rules and regulations governing the use of construction materials. The documentation submitted has been reviewed by Miami-Dade County Product Control Division and accepted by the Board of Rules and Appeals (BORA) to be used in Miami Dade County and other areas where allowed by the Authority Having Jurisdiction (AHJ).

This NOA shall not be valid after the expiration date stated below. The Miami-Dade County Product Control Division (In Miami Dade County) and/or the AHJ (in areas other than Miami Dade County) reserve the right to have this product or material tested for quality assurance purposes. If this product or material fails to perform in the accepted manner, the manufacturer will incur the expense of such testing and the AHJ may immediately revoke, modify, or suspend the use of such product or material within their jurisdiction. BORA reserves the right to revoke this acceptance, if it is determined by Miami-Dade County Product Control Division that this product or material fails to meet the requirements of the applicable building code.

This product is approved as described herein, and has been designed to comply with the Florida Building Code, including the High Velocity Hurricane Zone.

DESCRIPTION: Gamma Series "79" Aluminum Sliding Glass Door –S.M.I.

APPROVAL DOCUMENT: Drawing No **T-79**, titled "Test # 79 ALDORA 48" x 120" +110/-120 PSF Small Impact Elevation", sheets 1 through 8 of 8, prepared by manufacture, dated 07/05/05, with last revision "**R2**" on 02/14/06, signed and sealed by Farrokh Rasekhi P. E., bearing the Miami-Dade County Product Control Approval stamp with the Notice of Acceptance number and approval date by the Miami-Dade County Product Control Division.

MISSILE IMPACT RATING: Small Missile Impact

LABELING: Each unit shall bear a permanent label with the manufacturer's name or logo, city, state and following statement: "Miami-Dade County Product Control Approved", unless otherwise noted herein.

RENEWAL of this NOA shall be considered after a renewal application has been filed and there has been no change in the applicable building code negatively affecting the performance of this product.

TERMINATION of this NOA will occur after the expiration date or if there has been a revision or change in the materials, use, and/or manufacture of the product or process. Misuse of this NOA as an endorsement of any product, for sales, advertising or any other purposes shall automatically terminate this NOA. Failure to comply with any section of this NOA shall be cause for termination and removal of NOA.

ADVERTISEMENT: The NOA number preceded by the words Miami-Dade County, Florida, and followed by the expiration date may be displayed in advertising literature. If any portion of the NOA is displayed, then it shall be done in its entirety.

INSPECTION: A copy of this entire NOA shall be provided to the user by the manufacturer or its distributors and shall be available for inspection at the job site at the request of the Building Official.

This NOA consists of this page 1 and evidence pages E-1, as well as approval document mentioned above.

The submitted documentation was reviewed by **Jaime D. Gascon, P.E.**

PRODUCT CONTROL ACCEPTED

J. Gascon
6/2/06

Gamma USA

NOTICE OF ACCEPTANCE: EVIDENCE SUBMITTED

A. DRAWINGS

1. Manufacturer's parts and sections drawings.
2. Drawing No **T-79**, titled "Test # 79 ALDORA 48" x 120" +110/-120 PSF Small Impact Elevation", sheets 1 through 8 of 8, prepared by manufacture, dated 07/05/05 with last revision "**R2**" on 02/14/06, signed and sealed by Farrokh Rasekhi P. E.

B. TESTS

1. Test reports on 1) Air Infiltration Test, per FBC, TAS 202-94
   2) Uniform Static Air Pressure Test, Loading per FBC, TAS 202-94
   3) Water Resistance Test, per FBC, TAS 202-94
   4) Small Missile Impact Test per FBC, TAS 201-94,
   5) Cyclic Wind Pressure Loading per FBC, TAS 203-94
   6) Forced Entry Test, per SFBC 2411 3.2.1, TAS 202-94

   along with the manufacturer's parts and section drawings of an aluminum sliding glass door, prepared by Fenestration Testing Laboratory, Inc. Test Report No. **FTL-4688**, dated 08/19/05, signed and sealed by Edmundo Largaespada, P.E.

C. CALCULATIONS

1. Anchor verification calculations, complying with FBC-2004, dated 02/09/06, prepared by Structural Design, Inc., signed and sealed by Farrokh Rasekhi P. E.
   Complies with ASTM-E-1300-98

D. QUALITY ASSURANCE

1. Miami Dade Building Code Compliance Office (BCCO).

E. MATERIAL CERTIFICATIONS

1. Notice of Acceptance No. **06-0216.06** issued to Solutia, Inc. for their "Saflex IIIG Clear and Colored Interlayer" dated 05/05/06, expiring on 05/21/11.

F. STATEMENTS

1. Conformance letter dated on 02/09/06, signed and sealed by Farrokh Rasekhi P. E.
2. "No financial Interest" letter dated on 02/09/06, signed and sealed by Farrokh Rasekhi P. E.

G. OTHERS

1. Letter from the consultant, dated May 19, 2006, stating that the product is in compliance with the Florida Building Code (FBC).

Jaime D. Gascon, P.E.
Chief, Product Control Division
NOA No 06-0320.03
Expiration Date: June 22, 2011
Approval Date: June 22, 2006

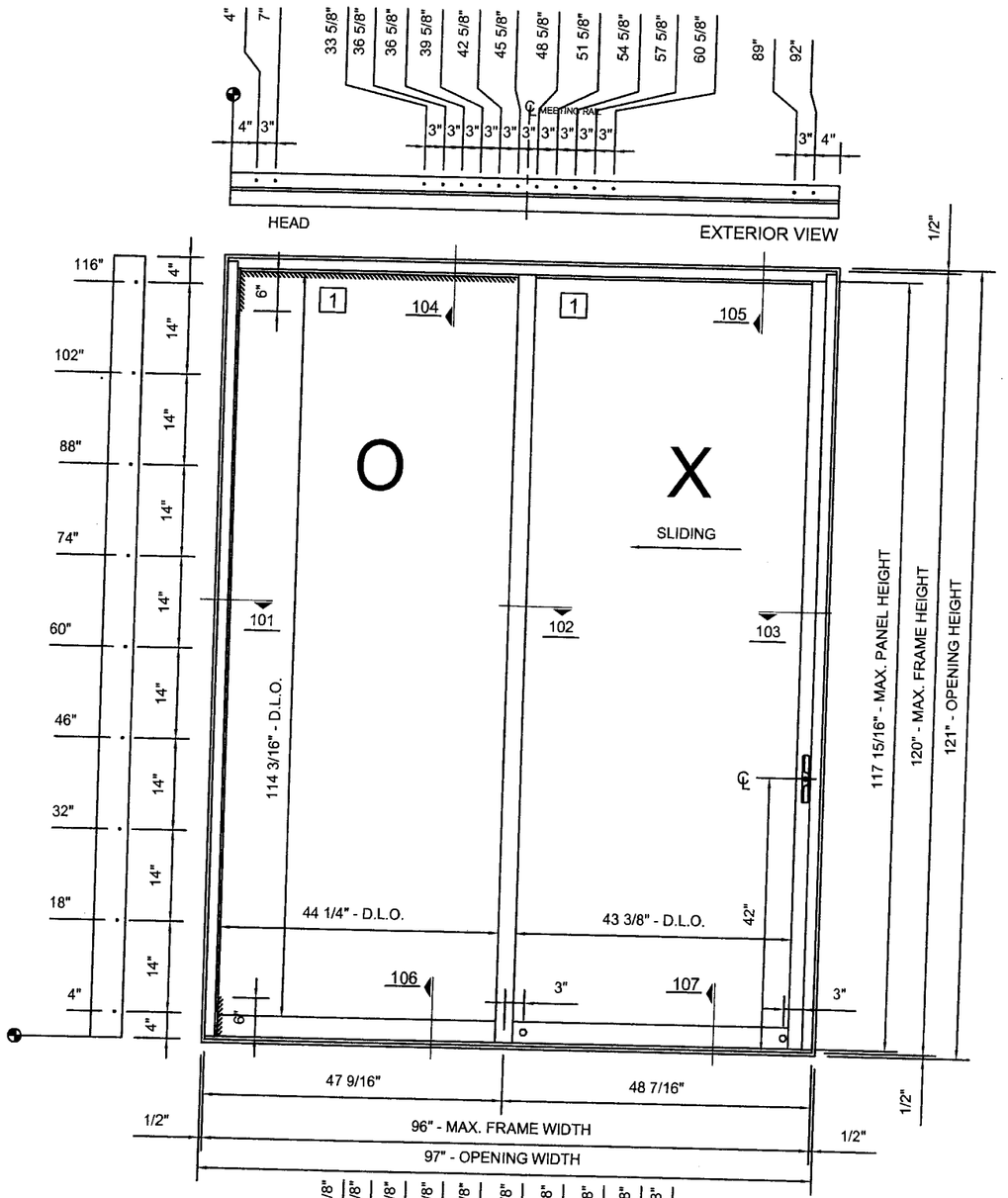

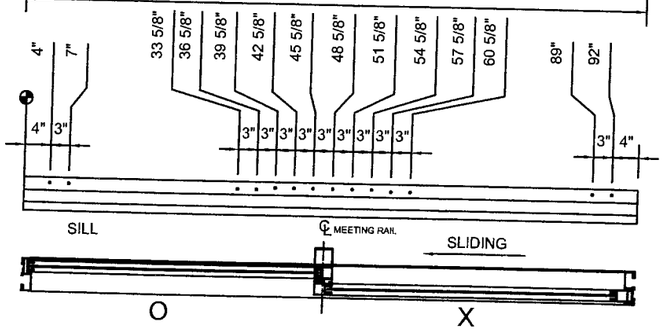

GENERAL NOTES

1 -GLASS TYPE: 9/16" LAMINATED GLASS
1/4" CLEAR TEMPERED GLASS
0.060" PVB (SOLUTIA)
1/4" CLEAR TEMPERED GLASS
-MAXIMUM GLASS DIMENSION 45 3/4" X 115 11/16"
-ALL ALUMINUM IS 6063 T6
-GLAZING PENETRATION: 3/4"

-1/2" MAX. SHIM SPACE
-CONCRETE APPLICATION
-FRAME CORNERS & MEETING RAIL SEAMS SEALED WITH SEALANT SPECTREM 2
-REFER TO BILL OF MATERIEL FOR COMPLETE DESCRIPTION

SHUTTER REQUIREMENTS:
1- INSTALLATION OF THIS UNIT ABOVE 30 FT ABOVE GRADE WILL NOT REQUIRE SHUTTERS
2- MIAMI DADE COUNTY APPROVED SHUTTERS WILL BE REQUIRED FOR INSTALLATION OF THIS UNIT BELOW 30 FT ABOVE THE GRADE

Approved as complying with the Florida Building Code
Date 06/22/06
NOA# 06-0320.04
Miami-Dade Product Control Division
By

REVISIONS:	BY:
R1 07/12/2005	D.L.
R2 02/14/2006	J.P

2/9/06
Farrokh Rasekhi, P.E.
Consulting Struct. Engineer
Structural Design, Inc.
FL. Registration #38001

MANUFACTURER:

Gamma

Gamma Industrie Inc.
15407 West Dixie Highway
North Miami Beach, FL 33162
Phone: (305) 957-7004 Fax: (305) 957-7006
Web site: www.gamma-online.com
Email: tech@gamma-online.com

TITLE:

TEST #79
ALDORA
48" X 120"
+110/-120 PSF
SMALL IMPACT
ELEVATION

SCALE:	DRAWN BY:	
1/2" = 1'-0"	D. LABBÉ	
DATE:	DRAWING NO.	SHEET NO.
07/05/2005	T-79	1 OF 8

Licence RBQ 1159-5927-22

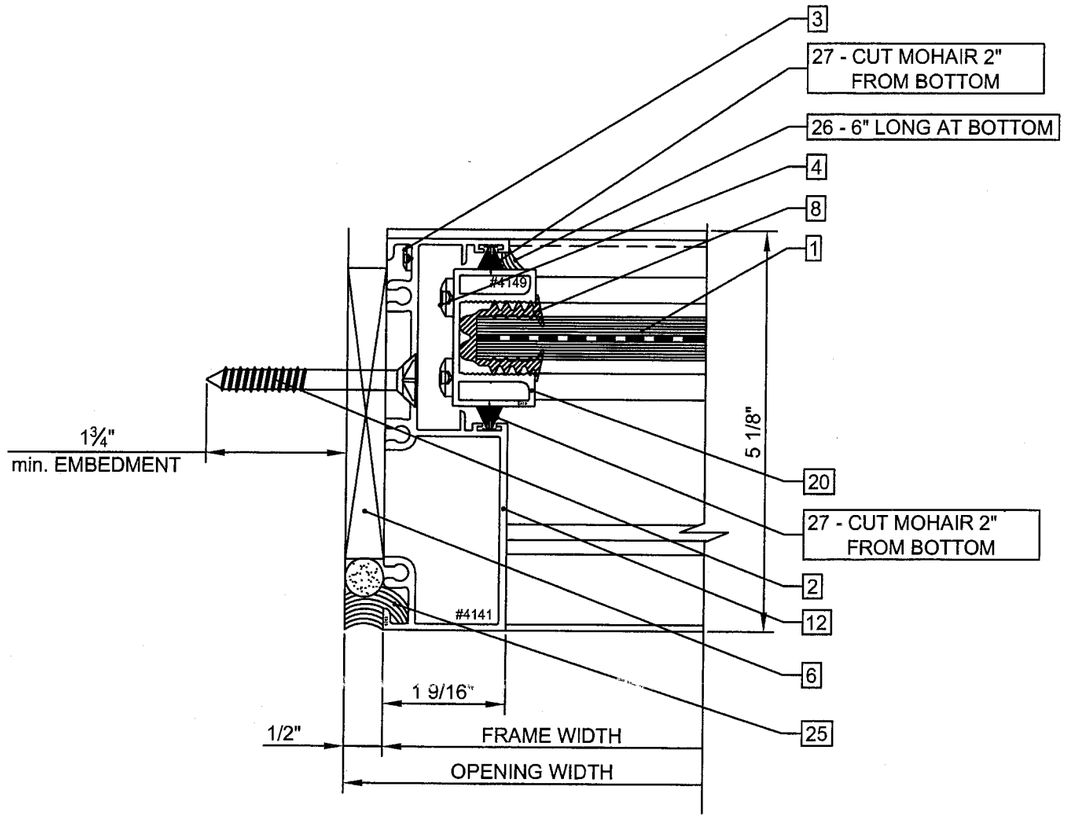

OUTSIDE

detail 101

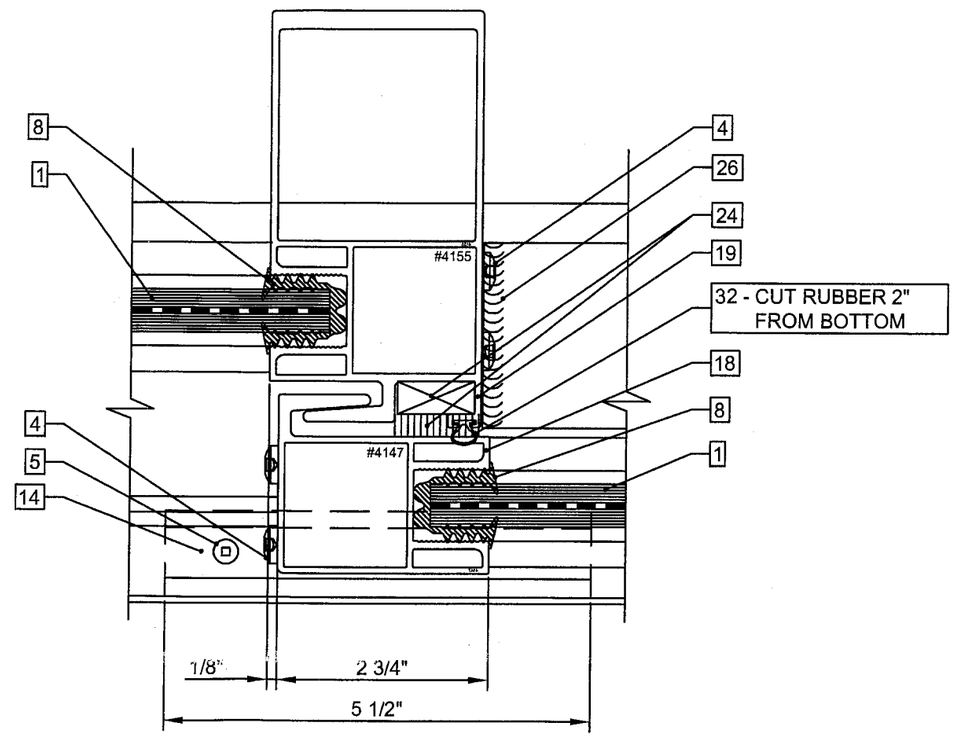

OUTSIDE

detail 102

Approved as complying with the Florida Building Code
Date 06/22/06
NOA# 06-0520.04
Miami-Dade Product Control Division
By

REVISIONS:	BY:
R1 07/12/2005	D.L.

2/9/06

Farrokh Rasekhi, P.E.
Consulting Struct. Engineer
Structural Design, Inc.
FL. Registration #38001

MANUFACTURER:

Gamma
Gamma Industrie Inc.
15407 West Dixie Highway
North Miami Beach, FL 33162
Phone: (305) 957-7004 Fax: (305) 957-7006
Web site: www.gamma-online.com
Email: tech@gamma-online.com

TITLE:

TEST #79
ALDORA
48" X 120"
+110/-120 PSF
SMALL IMPACT
DETAILS 101 & 102

SCALE:	DRAWN BY:	
6" = 1'-0"	D. LABBÉ	
DATE:	DRAWING NO.	SHEET NO.
07/05/2005	T-79	2 OF 8

Licence RBQ 1159-5527-22

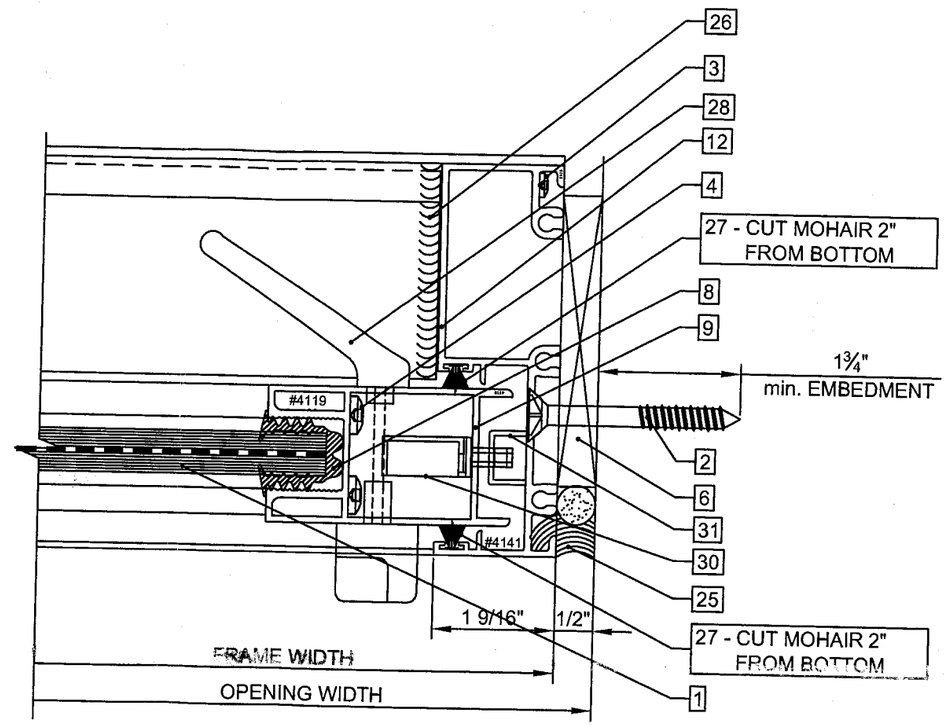

OUTSIDE

detail 103

Approved as complying with the Florida Building Code
Date 06/22/06
NOA# 06-0320.04
Miami Dade Product Control Division
By

REVISIONS: | BY:

2/9/06
Farrokh Rasekhi, P.E.
Consulting Struct. Engineer
Structural Design, Inc.
FL. Registration #38001

MANUFACTURER:

Gamma

Gamma Industrie Inc.
15407 West Dixie Highway
North Miami Beach, FL 33162
Phone: (305) 957-7004 Fax: (305) 957-7006
Web site: www.gamma-online.com
Email: tech@gamma-online.com

TITLE:

TEST #79
ALDORA
48" X 120"
+110/-120 PSF
SMALL IMPACT
DETAILS 103

SCALE:	DRAWN BY:	
6" = 1'-0"	D. LABBÉ	
DATE:	DRAWING NO.	SHEET NO.
07/05/2005	T-79	3 OF 8

License RBQ 1159-5527-22

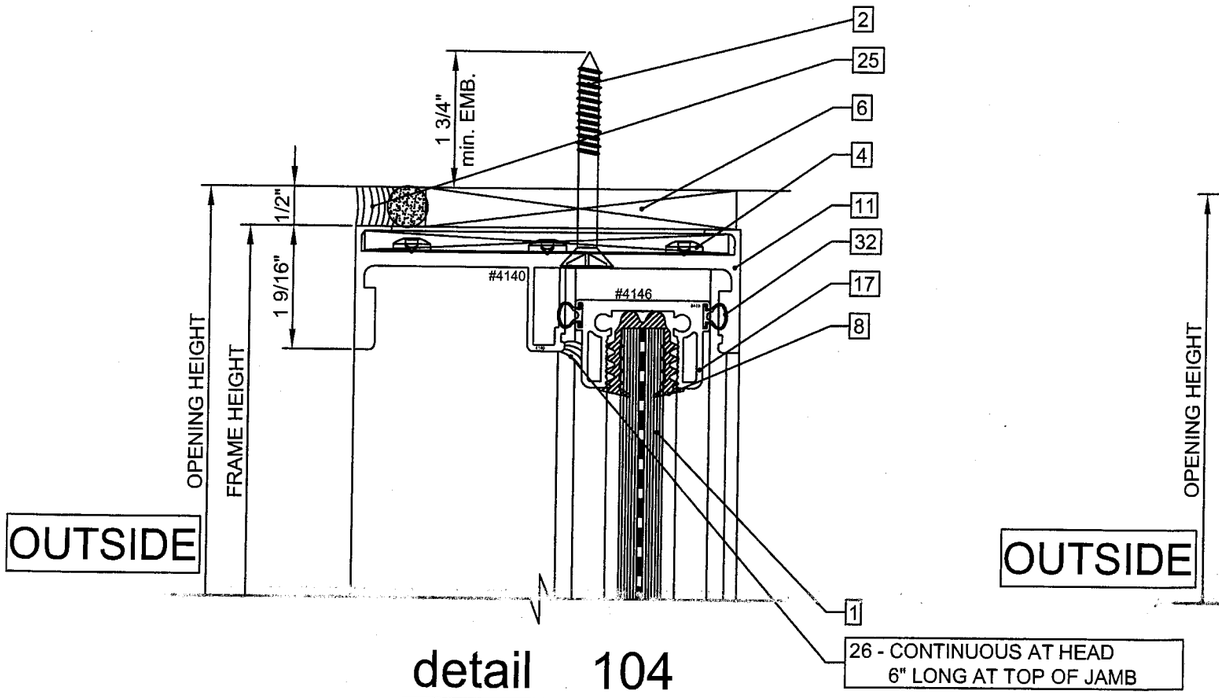

detail 104

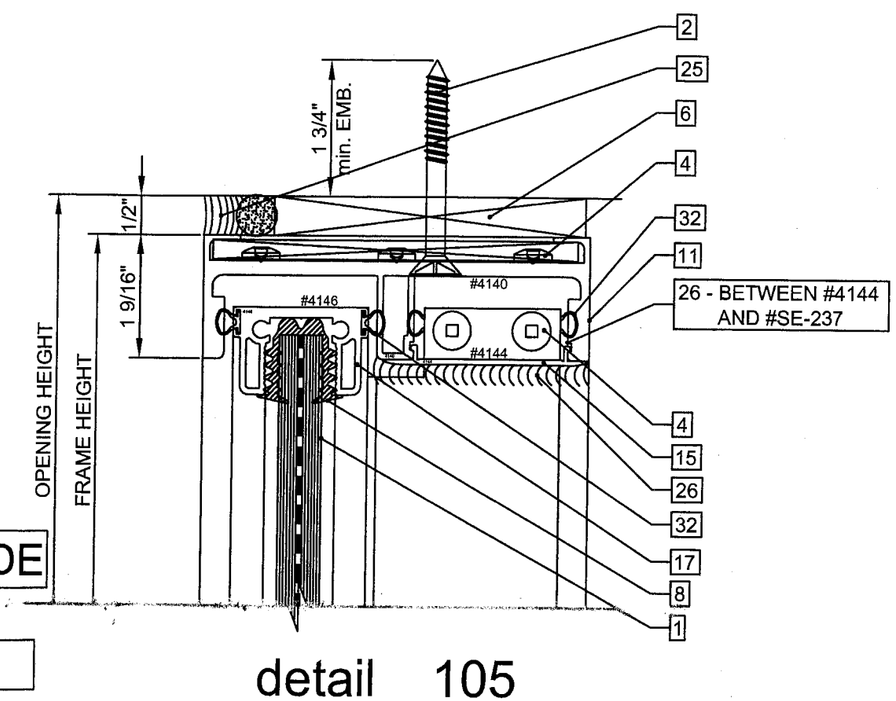

detail 105

Approved as complying with the Florida Building Code
Date 06/22/06
NOA# 06-0320.04
Miami-Dade Product Control Division
By

REVISIONS:	BY:
R1 07/12/2005	D.L.

2/9/06

Farrokh Rasekhi, P.E.
Consulting Struct. Engineer
Structural Design, Inc.
FL. Registration #38001

MANUFACTURER:

Gamma
Gamma Industrie Inc.
15407 West Dixie Highway
North Miami Beach, FL 33162
Phone: (305) 957-7004 Fax: (305) 957-7006
Web site: www.gamma-online.com
Email: tech@gamma-online.com

TITLE:

TEST #79
ALDORA
48" X 120"
+110/-120 PSF
SMALL IMPACT
DETAIL 104 & 105

SCALE:	DRAWN BY:	
6" = 1'-0"	D. LABBÉ	
DATE:	DRAWING NO.	SHEET NO.
07/05/2005	T-79	4 OF 8

Licence RBQ 1159-5527-22

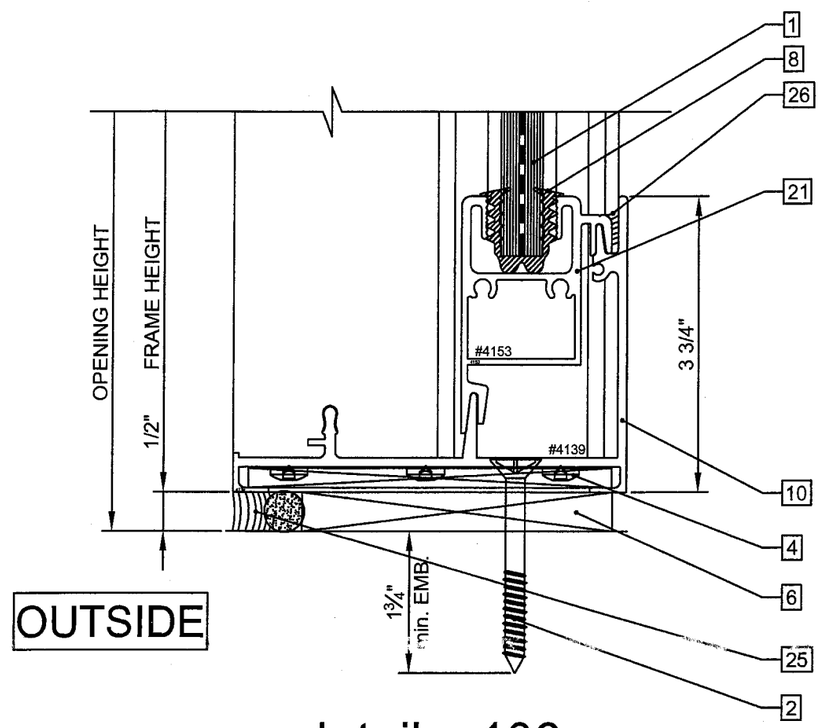

detail 106

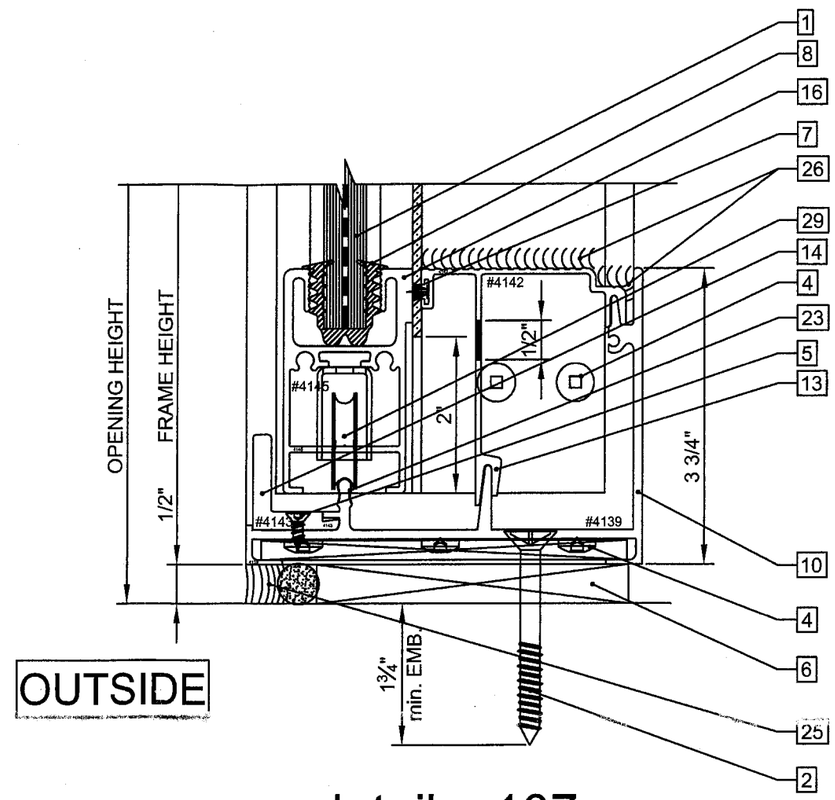

detail 107

Approved as complying with the Florida Building Code
Date 06/22/06
NOA# 06-0220.04
Miami Dade Product Control Division
By

REVISIONS:	BY:

2/4/06

Farrokh Rasekhi, P.E.
Consulting Struct. Engineer
Structural Design, Inc.
FL. Registration #38001

MANUFACTURER:

Gamma

Gamma Industrie Inc.
15407 West Dixie Highway
North Miami Beach, FL 33162

Phone: (305) 957-7004 Fax: (305) 957-7006
Web site: www.gamma-online.com
Email: tech@gamma-online.com

TITLE:

TEST #79
ALDORA
48" X 120"
+110/-120 PSF
SMALL IMPACT
DETAILS 106 & 107

SCALE:	DRAWN BY:	
6" = 1'-0"	D. LABBÉ	
DATE:	DRAWING NO.	SHEET NO.
07/05/2005	T-79	5 OF 8

Licence RBQ 1159-5527-22

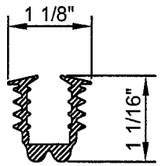

#3066 GLAZING GASKET

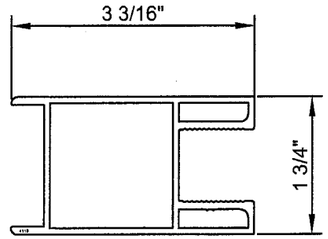

#4119 ALUMINUM MOVING PANEL JAMB AT ASTRAGAL

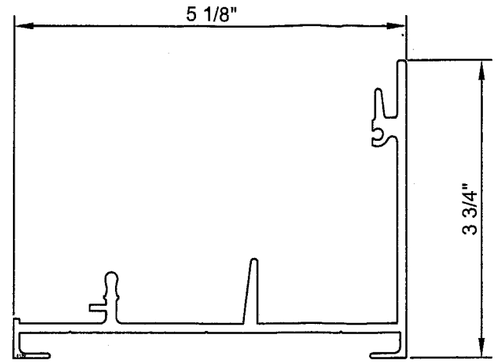

#4139 ALUMINUM FRAME SILL

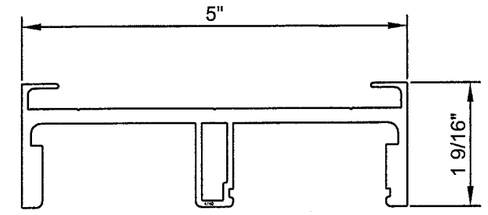

#4140 ALUMINUM FRAME HEAD

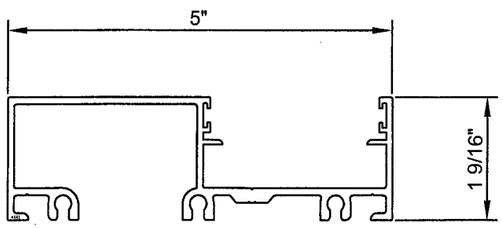

#4141 ALUMINUM FRAME JAMB

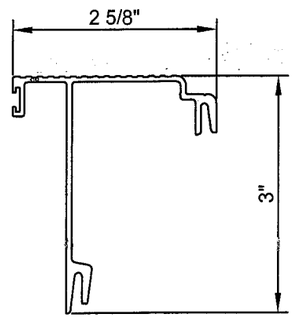

#4142 ALUMINUM THRESHOLD FILLING TRACK

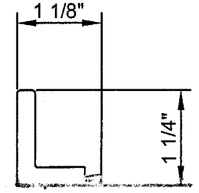

#4143 ALUMINUM STOPPER

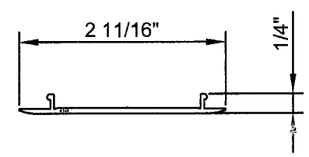

#4144 ALUMINUM SNAP-ON CAP

SANTOPRENE THERMOPLASTIC RUBBER # SE-237

STAINLESS STEEL COVER #502 By Unique

MOHAIR (SCHLEGEL #FS 7532-270)

MOHAIR (SCHLEGEL #FS 7550-270)

Approved as complying with the Florida Building Code
Date 06/22/06
NOA# 06-0320.04
Miami-Dade Product Control Division
By

FOR MORE SPECIFIC DIMENSIONS PLEASE REFER TO THE SPECIFICATION SHEET FOR EACH EXTRUSIONS

REVISIONS: BY:

2/9/06

Farrokh Rasekhi, P.E.
Consulting Struct. Engineer
Structural Design, Inc.
FL. Registration #38001

MANUFACTURER:

Gamma
Gamma Industrie Inc.
15407 West Dixie Highway
North Miami Beach, FL 33162
Phone: (305) 957-7004 Fax: (305) 957-7006
Web site: www.gamma-online.com
Email: tech@gamma-online.com

TITLE:

TEST #79
ALDORA
48" X 120"
+110/-120 PSF
SMALL IMPACT
GAMMA'S EXTRUSIONS

SCALE:	DRAWN BY:	
6" = 1'-0"	D. LABBÉ	
DATE:	DRAWING NO.	SHEET NO.
07/05/2005	T-79	6 OF 8

Licence RBQ 1159-5527-22

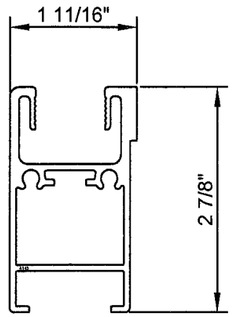

#4145 ALUMINUM MOVING PANEL SILL

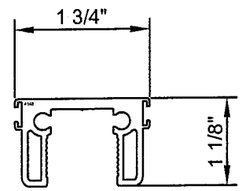

#4146 ALUMINUM PANEL HEAD

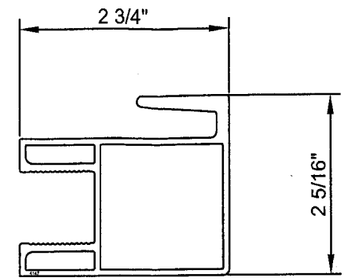

#4147 ALUMINUM MOVING PANEL JAMB AT MEETING RAIL

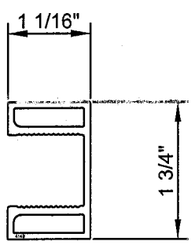

#4149 ALUMINUM FIXED PANEL JAMB

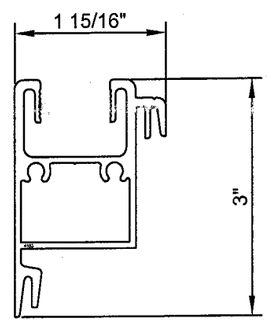

#4153 ALUMINUM FIXED PANEL SILL

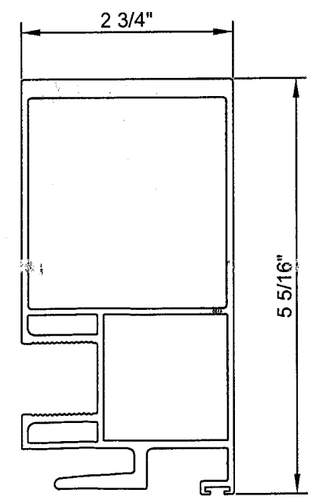

#4155 ALUMINUM FIXED PANEL JAMB AT MEETING RAIL

FOR MORE SPECIFIC DIMENSIONS PLEASE REFER TO THE SPECIFICATION SHEET FOR EACH EXTRUSIONS

Approved as complying with the Florida Building Code
Date 06-22-06
NOA# 06-0320.04
Miami Dade Product Control Division
By

REVISIONS: BY:

2/9/06

Farrokh Rasekhi, P.E.
Consulting Struct. Engineer
Structural Design, Inc.
FL. Registration #38001

MANUFACTURER:

Gamma

Gamma Industrie Inc.
15407 West Dixie Highway
North Miami Beach, FL 33162

Phone: (305) 957-7004 Fax: (305) 957-7006
Web site: www.gamma-online.com
Email: tech@gamma-online.com

TITLE:

TEST #79
ALDORA
48" X 120"
+110/-120 PSF
SMALL IMPACT
GAMMA'S EXTRUSIONS

SCALE:	DRAWN BY:	
6" = 1'-0"	D. LABBÉ	
DATE:	DRAWING NO.	SHEET NO.
07/05/2005	T-79	7 OF 8

Licence RBQ 1159-5527-22

ITEM	PART #	DESCRIPTION
1	-	9/16" LAMINATED GLASS:
		- 1/4" CLEAR TEMPERED GLASS
		- 0.060 PVB (SOLUTIA)
		- 1/4" CLEAR TEMPERED GLASS
2	-	5/16" TAPCON SCREW - 1 3/4" min. EMBEDMENT
3	-	#8 RH SS SCREW x 2" LONG
4	-	1/4"-20 PH SS SCREW x 1" LONG
5	-	#8 FH SS SCREW x 3/4" LONG
6	-	PVC SHIM
7	-	CONTINUOUS MOHAIR (SCHLEGEL # FS7532-270)
8	#3066	GLAZING GASKET
9	#4119	ALUMINUM MOVING PANEL JAMB
10	#4139	ALUMINUM FRAME SILL
11	#4140	ALUMINUM FRAME HEAD
12	#4141	ALUMINUM FRAME JAMB
13	#4142	ALUMINUM THRESHOLD FILLING TRACK
14	#4143	ALUMINUM STOPPER (5 1/2" LONG AT MEETING RAIL)
15	#4144	ALUMINUM SNAP-ON CAP
16	#4145	ALUMINUM MOVING PANEL SILL
17	#4146	ALUMINUM PANEL HEAD
18	#4147	ALUMINUM MOVING PANEL JAMB AT MEETING RAIL
19	#4155	ALUMINUM FIXED PANEL JAMB AT MEETING RAIL
20	#4149	ALUMINUM FIXED PANEL JAMB
21	#4153	ALUMINUM FIXED PANEL SILL
23	-	STAINLESS STEEL COVER #502 By Unique
24	-	PVC BLOCK 3" LONG WITH MOHAIR ON EXTERIOR FACE
25	-	BACKER ROD & SEALANT SPECTREM 1
26	-	SEALANT SPECTREM 1
27	-	CONTINUOUS MOHAIR (SCHLEGEL #FS7550-270)
28	-	ALUMINUM HANDLE SET TRUTH # 2760 / 2761
29	-	ROLLER (TRUTH # 39.13.00.202)
30	-	MORTISE (TRUTH # 16139)
31	-	KEEPER (TRUTH # 32429)
32	-	SANTOPRENE THERMOPLASTIC RUBBER # SE-237

Approved as complying with the Florida Building Code
Date 06/22/06
NOA# 06-0320.04
Miami-Dade Product Control Division
By

REVISIONS:	BY:
R1 07/12/2005	D.L.
R2 02/14/2006	J.P

2/9/06

Farrokh Rasekhi, P.E.
Consulting Struct. Engineer
Structural Design, Inc.
FL. Registration #38001

MANUFACTURER:

Gamma
Gamma Industrie Inc.
15407 West Dixie Highway
North Miami Beach, FL 33162
Phone: (305) 957-7004 Fax: (305) 957-7006
Web site: www.gamma-online.com
Email: tech@gamma-online.com

TITLE:

TEST #79
ALDORA
48" X 120"
+110/-120 PSF
SMALL IMPACT
BILL OF MATERIEL

SCALE:	DRAWN BY:	
N.T.S.	D. LABBÉ	
DATE:	DRAWING NO.	SHEET NO.
07/05/2005	T-79	8 OF 8

Licence RBQ 1159-5527-22