MIAMI-DADE COUNTY, FLORIDA
METRO-DADE FLAGLER BUILDING

BUILDING CODE COMPLIANCE OFFICE (BCCO)
PRODUCT CONTROL DIVISION

140 WEST FLAGLER STREET, SUITE 1603
MIAMI, FLORIDA 33130-1563
(305) 375-2901 FAX (305) 375-2908
www.buildingcodeonline.com

NOTICE OF ACCEPTANCE (NOA)

Alcan Composites USA, Inc.
P. O. Box 507
208 W. 5th Street
Benton, KY 42025

SCOPE: This NOA is being issued under the applicable rules and regulations governing the use of construction materials. The documentation submitted has been reviewed by Miami-Dade County Product Control Division and accepted by the Board of Rules and Appeals (BORA) to be used in Miami Dade County and other areas where allowed by the Authority Having Jurisdiction (AHJ).

This NOA shall not be valid after the expiration date stated below. The Miami-Dade County Product Control Division (In Miami Dade County) and/or the AHJ (in areas other than Miami Dade County) reserve the right to have this product or material tested for quality assurance purposes. If this product or material fails to perform in the accepted manner, the manufacturer will incur the expense of such testing and the AHJ may immediately revoke, modify, or suspend the use of such product or material within their jurisdiction. BORA reserves the right to revoke this acceptance, if it is determined by Miami-Dade County Product Control Division that this product or material fails to meet the requirements of the applicable building code.

This product is approved as described herein, and has been designed to comply with the Florida Building Code including the High Velocity Hurricane Zone.

DESCRIPTION: "Alucobond Composite Wall Panel over Steel"

APPROVAL DOCUMENT: Drawing No. ALUCO/STEEL-1, titled "Dade Co. – Alucobond over Steel", sheet 1 of 1, prepared by Alcan Composites USA, Inc., dated 01/05/06, with last revision on 08/21/06, signed and sealed by A. N. Reeves, P.E., bearing the Miami-Dade County Product Control Renewal stamp with the Notice of Acceptance number and expiration date by the Miami-Dade County Product Control Division.

MISSILE IMPACT RATING: Large and Small Missile Impact

LABELING: Each panel shall bear a permanent label with the manufacturer's name or logo, city, state and the following statement: "Miami-Dade County Product Control Approved or MDCPCA", unless otherwise noted herein.

RENEWAL of this NOA shall be considered after a renewal application has been filed and there has been no change in the applicable building code negatively affecting the performance of this product.

TERMINATION of this NOA will occur after the expiration date or if there has been a revision or change in the materials, use, and/or manufacture of the product or process. Misuse of this NOA as an endorsement of any product, for sales, advertising or any other purposes shall automatically terminate this NOA. Failure to comply with any section of this NOA shall be cause for termination and removal of NOA.

ADVERTISEMENT: The NOA number preceded by the words Miami-Dade County, Florida, and followed by the expiration date may be displayed in advertising literature. If any portion of the NOA is displayed, then it shall be done in its entirety.

INSPECTION: A copy of this entire NOA shall be provided to the user by the manufacturer or its distributors and shall be available for inspection at the job site at the request of the Building Official.

This NOA **renews NOA # 05-0620.04** and consists of this page, evidence page(s) as well as approval document mentioned above.

The submitted documentation was reviewed by **Candido F. Font, P.E.**

09/21/06

NOA No. 06-0320.05
Expiration Date: July 31, 2010
Approval Date: September 21, 2006

Alcan Composite USA, Inc.

NOTICE OF ACCEPTANCE: EVIDENCE SUBMITTED

A DRAWINGS

1 Drawings prepared by Alcan Composites, Inc., titled "Dade Co.– Alucobond over Steel", No.ALUCO/STEEL-1, dated 01/05/06 with last revision on 08/21/06, sheet 1 of 1 signed and sealed by A. N. Reeves, PE.

B TEST

1. Test report on Cyclic Wind Pressure test per TAS 203 and Uniform Static Air Pressure test per PA 202 on "Alucobond Aluminum Composite Wall Panel System", prepared by Architectural Testing Inc., report No. ATI-58412.01-122-18, dated 08/17/05, signed and sealed by S. M. Urich, PE.
2. Self Ignition Temperature test report per ASTM D-1929 on "Alucobond ", prepared by Southwest Research Institute; Project No. SwRi 01.10934.01.657, dated 10/14/05, signed and sealed by R. L. Vinson III, PE.
3. Surface Burning Characteristic test report per ASTM E-84 on "Alucobond " prepared by Southwest Research Institute, Project No. SwRi 01-109.32.01.256(1) dated 10/11/05, and signed and sealed by R. L. Vinson III, PE.
4. Time of Burning test report per ASTM D-635 on "Alucobond " prepared by Southwest Research Institute, Project No. SwRi 01-10932.01.257 dated 10/11/05, signed and sealed by R. L. Vinson III, PE.

C CALCULATIONS

1. N/A.

D QUALITY ASSURANCE

1. Building Code Compliance Office.

E STATEMENTS

1 Test compliance prepared by H. R. Engineering Inc on 07/12/06, signed and sealed by A. N. Reeves, PE.

2 No financial interest letter prepared by H. R. Engineering Inc, on 07/12/06, signed and sealed by A. N. Reeves PE.

09/21/06

Candido F. Bont, P. E.
Product Control Examiner
NOA No. 06-0320.05
Expiration Date: July 31, 2010
Approval Date: September 21, 2006

DESCRIPTION:
THIS IS 4mm THICK ALUCOBOND, A NON-FIRE RATED COMPOSITE PANEL CONSISTING OF TWO 0.020" ALUMINUM FACE SHEETS WITH A LOW DENSITY POLYETHYLENE CORE. THE PANEL EDGES ARE FOLDED OVER AND THE FOLDED CORNERS ARE REINFORCED WITH 0.035" THICK ALUMINUM CORNER ANGLES WHICH ARE ATTACHED WITH #10x3/4" SHEET METAL SCREWS.

MATERIAL CHARACTERISTICS

1. ALUCOBOND WITH POLYETHYLENE CORE

DESCRIPTION	TEST	PROPERTIES
SELF IGNITION TEMP.	ASTM D1929	716°F
FLASH IGNITION TEMP.	ASTM D1929	716°F
RATE OF BURNING	ASTM D635	CC1
FLAME SPREAD INDEX	ASTM E84	5
SMOKE DEVELOPMENT	ASTM E84	0

2. ALUMINUM SKINS

THICKNESS	0.02 INCHES
ALLOY	3003-H24
FINISH	PVDF PAINT

3. PANEL SIZES

WIDTH	39", 48", 50", 60" & 62"
LENGTH	8', 10', 12', & 16'
THICKNESS	0.16 INCHES (4.00mm)

4. STEEL STUDS GREATER THAN 4'-0" IN HEIGHT MUST BE DESIGNED BY A FLORIDA P.E. FOR A MINIMUM OF ±90 PSF WIND PRESSURE.

DESIGN PRESSURE RATING
+90 PSF -90 PSF
LARGE MISSLE IMPACT RESISTANCE
INSTALLED IN FRONT OF 1" RIB
CORRUGATED 22 GAUGE
STEEL DECKING SUPPORTED 16" O.C.

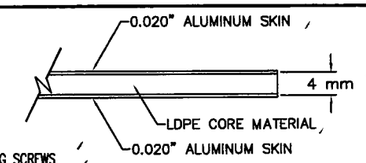

ALUCOBOND-ALUM. COMPOSITE PANEL

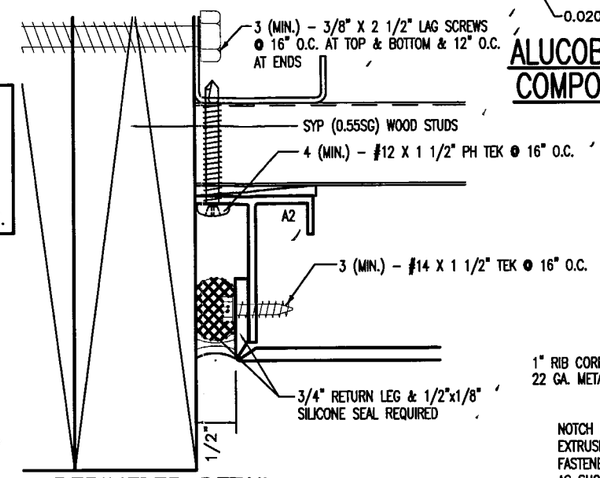

PERIMETER DETAIL

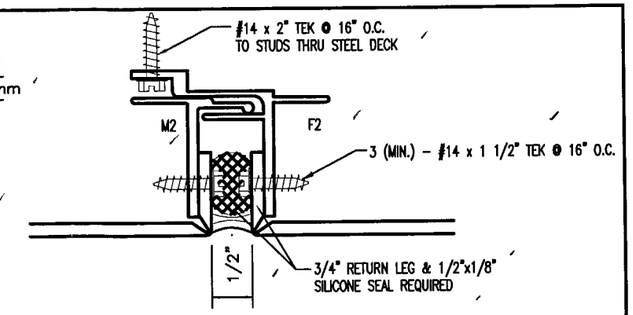

VERTICAL JT DETAIL

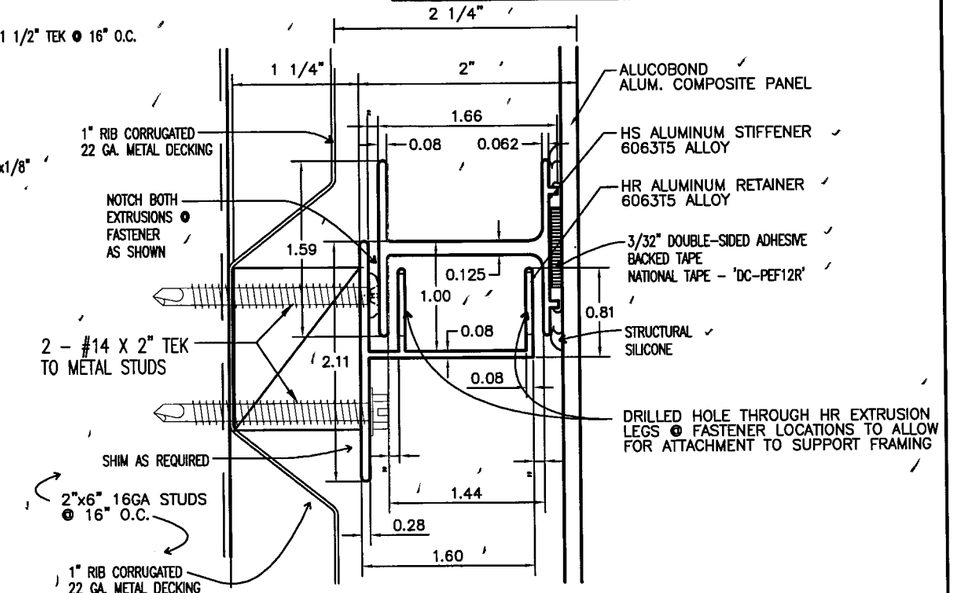

STIFFENER RETAINER DETAIL

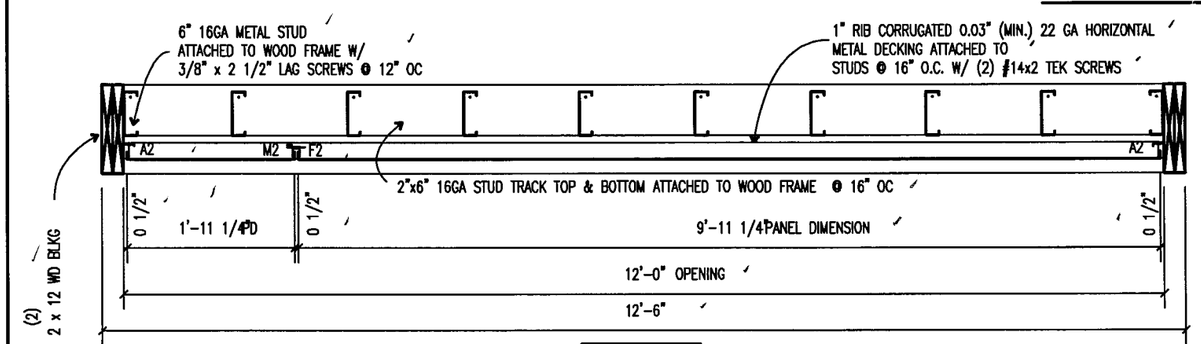

PLAN SECTION

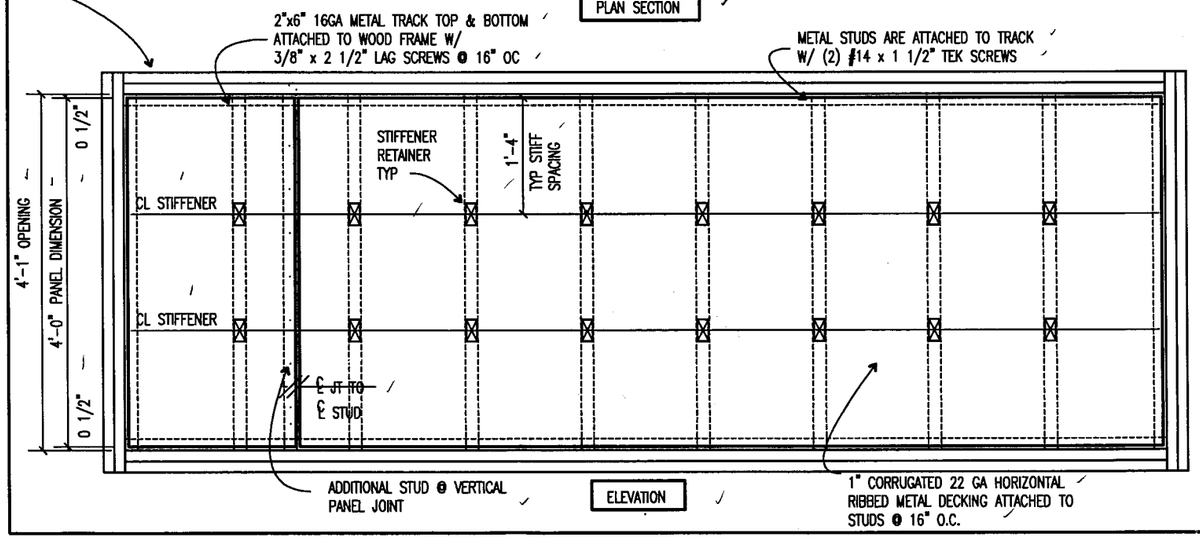

ELEVATION

PRODUCT RENEWED
as complying with the Florida
Building Code
Acceptance No. 06-0320.05
Expiration Date 07/31/10
By
Miami Dade Product Control
Division

Allen N. Reeves
22 AUGUST 2006

ALCAN COMPOSITES USA, INC.
208 WEST 5TH STREET
BENTON, KY. 42025
270-527-4200

TITLE: DADE CO. - ALUCOBOND OVER STEEL			
DWG NO.:	SHT NO.:	DWG DATE:	REV. DATE:
ALUCO/STEEL-1	1	01-05-06	08-21-06

ALLEN N. REEVES, P.E. FLORIDA #19354