MIAMI-DADE COUNTY
BUILDING CODE COMPLIANCE OFFICE (BCCO)
PRODUCT CONTROL DIVISION

MIAMI-DADE COUNTY, FLORIDA
METRO-DADE FLAGLER BUILDING
140 WEST FLAGLER STREET, SUITE 1603
MIAMI, FLORIDA 33130-1563
(305) 375-2901 FAX (305) 375-2908
www.buildingcodeonline.com

# NOTICE OF ACCEPTANCE (NOA)

**T.M. Window & Door Co.**
**601 N.W. 12th Ave.**
**Pompano Beach, FL 33069**

## SCOPE:

This NOA is being issued under the applicable rules and regulations governing the use of construction materials. The documentation submitted has been reviewed by Miami-Dade County Product Control Division and accepted by the Board of Rules and Appeals (BORA) to be used in Miami Dade County and other areas where allowed by the Authority Having Jurisdiction (AHJ).

This NOA shall not be valid after the expiration date stated below. The Miami-Dade County Product Control Division (In Miami Dade County) and/or the AHJ (in areas other than Miami Dade County) reserve the right to have this product or material tested for quality assurance purposes. If this product or material fails to perform in the accepted manner, the manufacturer will incur the expense of such testing and the AHJ may immediately revoke, modify, or suspend the use of such product or material within their jurisdiction. BORA reserves the right to revoke this acceptance, if it is determined by Miami-Dade County Product Control Division that this product or material fails to meet the requirements of the applicable building code.

This product is approved as described herein, and has been designed to comply with the Florida Building Code , including High Velocity Hurricane Zone of the Florida Building Code.

**DESCRIPTION: Series 338 Aluminum Fixed Window-Impact**

**APPROVAL DOCUMENT:** Drawing No. **W03-52 Rev-C,** titled "Series-338 Aluminum Fixed Window (Impact.)", sheets 1 through 4 of 4, prepared by Al Farooq Corporation, dated 07/11/03 last revised on June 13, 2006, signed and sealed by Dr. Humayoun Farooq, P.E., bearing the Miami-Dade County Product Control Revision stamp with the Notice of Acceptance number and expiration date by the Miami-Dade County Product Control Division.

**MISSILE IMPACT RATING: Large Missile Impact Resistant**

**LABELING:** Each unit shall bear a permanent label with the manufacturer's name or logo, city, state and following statement: "Miami-Dade County Product Control Approved", unless otherwise noted herein.

**RENEWAL** of this NOA shall be considered after a renewal application has been filed and there has been no change in the applicable building code negatively affecting the performance of this product.

**TERMINATION** of this NOA will occur after the expiration date or if there has been a revision or change in the materials, use, and/or manufacture of the product or process. Misuse of this NOA as an endorsement of any product, for sales, advertising or any other purposes shall automatically terminate this NOA. Failure to comply with any section of this NOA shall be cause for termination and removal of NOA.

**ADVERTISEMENT:** The NOA number preceded by the words Miami-Dade County, Florida, and followed by the expiration date may be displayed in advertising literature. If any portion of the NOA is displayed, then it shall be done in its entirety.

**INSPECTION:** A copy of this entire NOA shall be provided to the user by the manufacturer or its distributors and shall be available for inspection at the job site at the request of the Building Official.
This NOA **revises # 03-0925.04** and consists of this page 1 and evidence page as well as approval document mentioned above.
The submitted documentation was reviewed by **Ishaq I. Chanda, P.E.**

PRODUCT CONTROL ACCEPTED

6/15/16

## NOTICE OF ACCEPTANCE: EVIDENCE SUBMITTED

**A. DRAWINGS** (transferred from file # **03-0925.04**)

1. Manufacturer's die drawings and sections.
2. Drawing No. **W03-52 Rev-C,** titled "Series-338 Aluminum Fixed Window (Impact.)", sheets 1 through 4 of 4, prepared by Al Farooq Corporation, dated 07/11/03 last revised on June 13, 2006, signed and sealed by Dr. Humayoun Farooq, P.E.

**B. TESTS** (transferred from file # **03-0925.04**) Test conducted per SFBC, PA 201, 202 &203-94

1. Test reports on 1) Air Infiltration Test, per FBC, TAS 202-94
   2) Uniform Static Air Pressure Test, Loading per FBC, TAS 202-94
   3) Water Resistance Test, per FBC, TAS 202-94
   4) Large Missile Impact Test, per FBC, TAS 201-94
   5) Cyclic Wind Pressure Loading, per FBC, TAS 203-94

   Along with marked-up drawings and installation diagram of an aluminum fixed window, prepared by Fenestration Testing Laboratories, Test Report No. **FTL-2782 (FTL00114),** per PA 201, 202, 203-94, **FTL-2784 (FTL00140),** per PA 201 & 203-94 and **FTL-3803 (FTL03072),** Per TAS 201, 202 and 203-94 dated 11/06/01, 11/06/01 and May 22, 2003 respectively, signed and sealed by Luis Figueredo, P. E. and Joseph Chan, P.E.
2. Test reports on 1) Air Infiltration Test, per PA 202-94
   2) Uniform Static Air Pressure Test, Loading per FBC, TAS 202-94
   3) Water Resistance Test, per FBC, TAS 202-94
   4) Large Missile Impact Test, per FBC, TAS 201-94
   5) Cyclic Wind Pressure Loading, per FBC, TAS 203-94

   Along with marked-up drawings and installation diagram of an aluminum fixed window, prepared by American Testing Lab of South Florida, Test Report No. **ATL #0806.02-02**, dated 09/24/02, signed and sealed by William R. Mehner, P.E.

**C. CALCULATIONS**

1. Anchor verification per FBC 2004, signed and sealed by Dr. Humayoun Farooq, P. E.
2. Anchor, glass and structural analysis, prepared by Al Farooq Corporation, dated 09/12/03 and revised on December 11, 2003, signed and sealed by Dr. Humayoun Farooq, P.E. (transferred from file # 03-0925.04)

**D. QUALITY ASSURANCE BY:**

1. Miami-Dade County Building Code Compliance Office (BCCO)

**E. MATERIAL CERTIFICATIONS**

1. Notice of Acceptance **No. 02-1205.03** issued to Security Glass Holding LLC for "SAF-GLAS", expiring on 12/16/07.
2. Notice of Acceptance **No. 03-0916.02** issued to Glasslam NGI, dba Nebula Glass for "Glasslam Safety Plus", expiring on.09-09-2008.
3. Notice of Acceptance No.**03-1223.04** (# 99-0302.04) issued to UCB Chemical Corp for "Uvekol", expiring on.02-08-2009.

**F. STATEMENTS** (transferred from file # **03-0925.04**)

1. Statement letter dtd 02-22-06 of compliance to FBC 2004, signed and sealed by Dr. Humayoun Farooq, P. E
2. Statement letter of conformance and "No financial interest", dated 09/18/03, signed and sealed by Dr. Humayoun Farooq, P.E.
3. Laboratory compliance statements, part of respective test reports.

**G. OTHER**

1. Test proposal by TM Windows dated May 13, 2003 approved dated 5/16/03 by BCCO.

Ishaq I. Chanda

**Ishaq I. Chanda, P.E.**
**Product Control Examiner**
**NOA No 06-0320.07**
**Expiration Date: January 08, 2009**
**Approval Date: July 06, 2006**

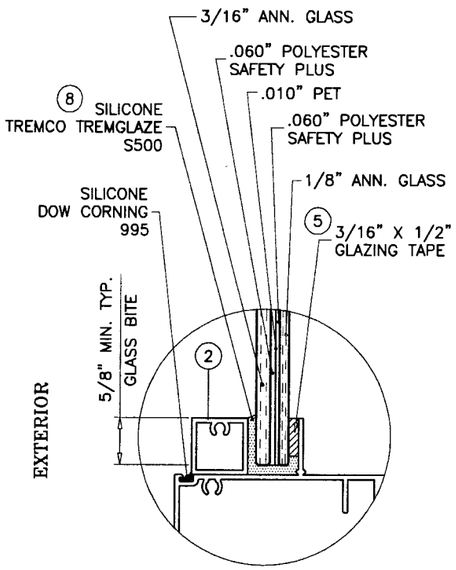


GLASS TYPE 'A'
'GLASSLAM SAFETY PLUS'
BY NEBULA GLASS INTL. INC.

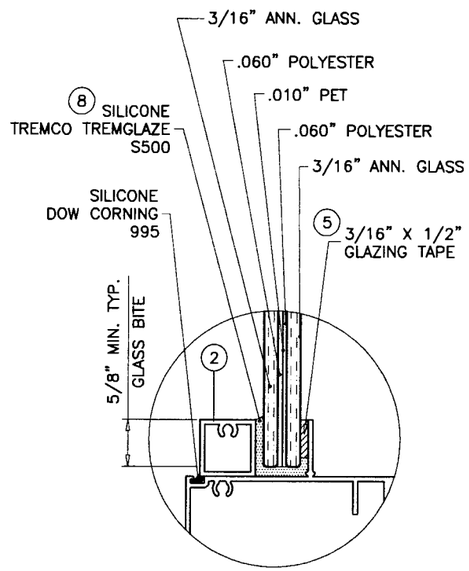


GLASS TYPE 'B'
'GLASSLAM SAFETY PLUS'
BY NEBULA GLASS INTL. INC.

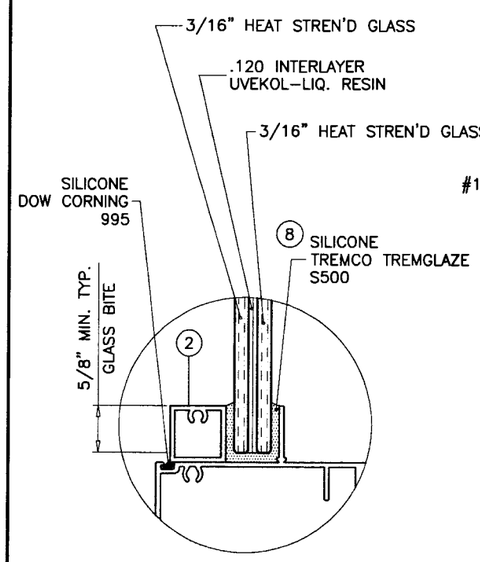


GLASS TYPE 'C'
'UVEKOL'
BY UCB CHEMICAL CORP.

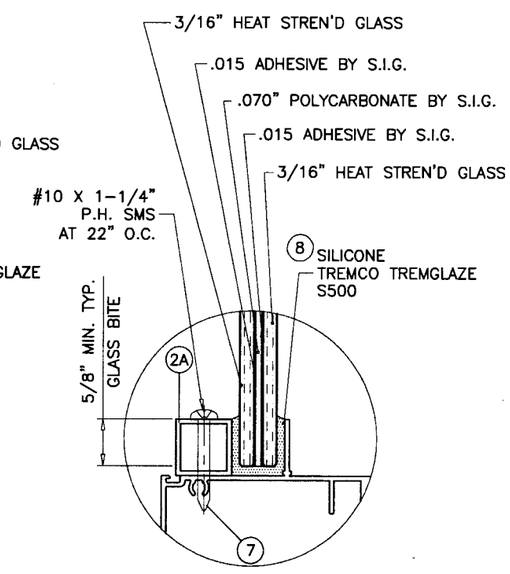


GLASS TYPE 'D'
'SAF-GLAS'
BY SECURITY IMPACT GLASS HOLDING INC.

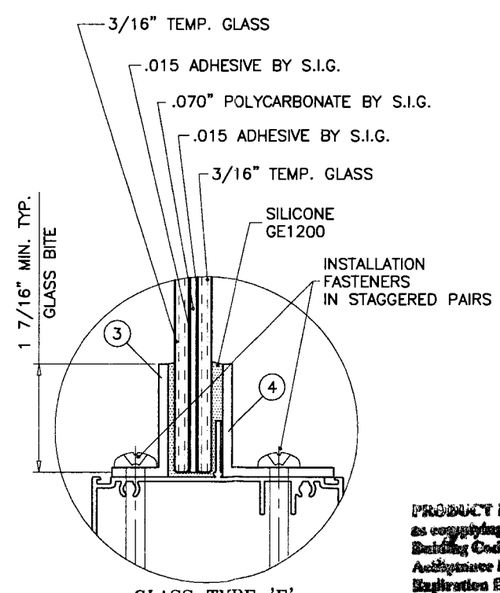


GLASS TYPE 'E'
'SAF-GLAS'
BY SECURITY IMPACT GLASS HOLDING INC.

## GLAZING OPTIONS

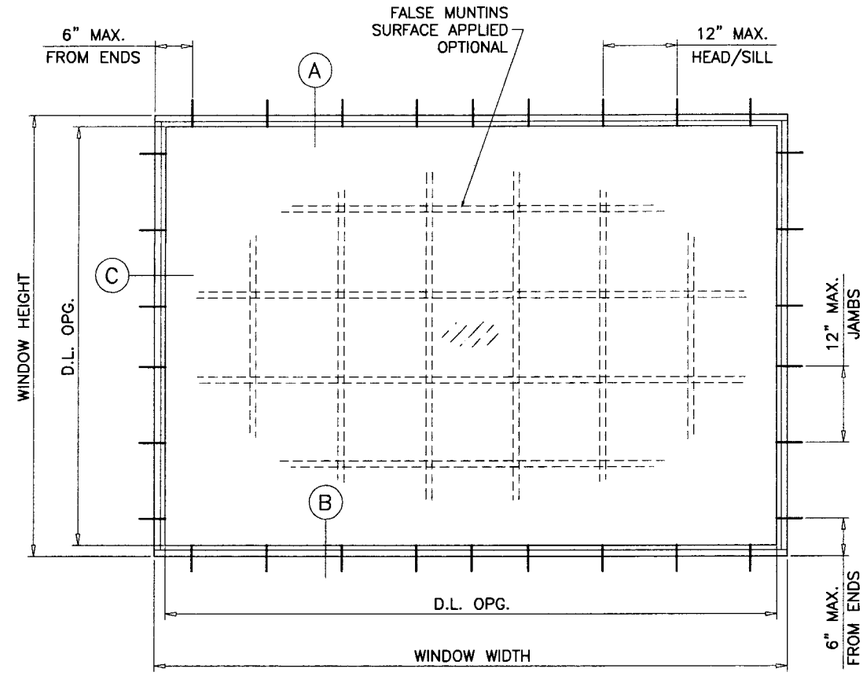


TYPICAL ELEVATION

## SERIES 338 ALUMINUM FIXED WINDOW

DESIGN LOAD RATING FOR THESE WINDOWS TO BE AS PER CHARTS SHOWN ON SHEET 2.

APPROVAL APPLIES TO SINGLE FIXED WINDOWS,
ALSO COMBINATIONS OF FIXED/FIXED OR FIXED WITH OTHER MIAMI-DADE COUNTY APPR'D WINDOWS USING MIAMI-DADE COUNTY APPROVED MULLIONS IN BETWEEN.
LOWER DESIGN PRESSURE FROM WINDOWS OR MULLION APPROVAL WILL APPLY TO ENTIRE SYSTEM.

THIS PRODUCT HAS BEEN DESIGNED AND TESTED TO COMPLY WITH THE REQUIREMENTS OF THE FLORIDA BUILDING CODE 2004 EDITION (REV. 2005) INCLUDING HIGH VELOCITY HURRICANE ZONE (HVHZ).

WOOD BUCKS BY OTHERS, MUST BE ANCHORED PROPERLY TO TRANSFER LOADS TO THE STRUCTURE.

ANCHORS SHALL BE AS LISTED, SPACED AS SHOWN ON DETAILS, ANCHORS EMBEDMENT TO BASE MATERIAL SHALL BE BEYOND WALL DRESSING OR STUCCO.

ANCHORING OR LOADING CONDITIONS NOT SHOWN IN THESE DETAILS ARE NOT PART OF THIS APPROVAL.

A LOAD DURATION INCREASE IN ALLOWABLE STRESS IS USED IN DESIGN OF WOOD ANCHORS ONLY.

ALL STEEL IN CONTACT WITH ALUMINUM TO BE PAINTED OR PLATED.

PRODUCT REVISED
as complying with the Florida Building Code
Acceptance No. 06-0320.07
Expiration Date JAN 08, 2009
By Ishaq I. Chunda
Miami-Dade Product Control Division

THESE WINDOWS ARE RATED FOR LARGE MISSILE IMPACT. SHUTTERS ARE NOT REQUIRED.

Engr: DR. HUMAYOUN FAROOQ
STRUCTURES
FLA. PE # 16557
C.A.N. 3538

JUN 13 2006


AL-FAROOQ CORPORATION
ENGINEERS, PLANNERS & PRODUCT DESIGN
1235 SW 87 AVE
MIAMI, FLORIDA 33174
TEL. (305) 264-8100 FAX. (305) 262-6978
COMP-ANL\W03-52TMW


SERIES 338 ALUMINUM FIXED WINDOW (L.M.I.)

TM WINDOW AND DOOR
601 N.W. 12TH AVE.
POMPANO BEACH, FL. 33069
TEL. (954) 781-4430 FAX. (954) 781-5078

revisions:

| no | date | by | description |
|---|---|---|---|
| A | 12.05.03 | | REV. PER BCCO COMMENTS |
| B | 02.24.06 | | UPDATED FOR 2004 FBC |
| C | 06.12.06 | | REV. PER BCCO COMMENTS |

date: 07-11-03
scale: 1/2" = 1"
dr. by: HAMID
chk. by:

drawing no.
W03-52

sheet 1 of 4

## DESIGN LOAD CAPACITY – PSF

| WINDOW DIMS. | | GLASS TYPE 'A' | | GLASS TYPE 'B' | | GLASS TYPE 'C' | | GLASS TYPE 'D' | | GLASS TYPE 'E' | |
|---|---|---|---|---|---|---|---|---|---|---|---|
| WIDTH | LENGTH | EXT. (+) | INT. (–) | EXT. (+) | INT. (–) | EXT. (+) | INT. (–) | EXT. (+) | INT. (–) | EXT. (+) | INT. (–) |
| 36" | 48" | 62.0 | 62.0 | 59.0 | 59.0 | 75.0 | 75.0 | 90.0 | 90.0 | 95.0 | 95.0 |
| 42" | | 54.6 | 54.6 | 59.0 | 59.0 | 75.0 | 75.0 | 90.0 | 90.0 | 95.0 | 95.0 |
| 48" | | 47.8 | 47.8 | 59.0 | 59.0 | 75.0 | 75.0 | 90.0 | 90.0 | 95.0 | 95.0 |
| 54" | | 47.8 | 47.8 | 59.0 | 59.0 | 75.0 | 75.0 | 90.0 | 90.0 | 95.0 | 95.0 |
| 60" | | X X | X X | 57.9 | 57.9 | 75.0 | 75.0 | 90.0 | 90.0 | 95.0 | 95.0 |
| 66" | | X X | X X | 54.6 | 54.6 | 75.0 | 75.0 | 90.0 | 90.0 | 95.0 | 95.0 |
| 72" | | X X | X X | X X | X X | 75.0 | 75.0 | 90.0 | 90.0 | 95.0 | 95.0 |
| 36" | 60" | 62.0 | 62.0 | 59.0 | 59.0 | 75.0 | 75.0 | 90.0 | 90.0 | 95.0 | 95.0 |
| 42" | | 52.3 | 52.3 | 59.0 | 59.0 | 75.0 | 75.0 | 90.0 | 90.0 | 95.0 | 95.0 |
| 48" | | X X | X X | 57.9 | 57.9 | 75.0 | 75.0 | 90.0 | 90.0 | 95.0 | 95.0 |
| 54" | | X X | X X | X X | X X | 75.0 | 75.0 | 80.0 | 80.0 | 95.0 | 95.0 |
| 60" | | X X | X X | X X | X X | 72.0 | 72.0 | 72.0 | 72.0 | 95.0 | 95.0 |
| 66" | | X X | X X | X X | X X | 72.0 | 72.0 | 72.0 | 72.0 | 95.0 | 95.0 |
| 72" | | X X | X X | X X | X X | 72.0 | 72.0 | 72.0 | 72.0 | 90.3 | 90.3 |
| 36" | 72" | 52.9 | 52.9 | 59.0 | 59.0 | 75.0 | 75.0 | 90.0 | 90.0 | 95.0 | 95.0 |
| 42" | | X X | X X | 56.0 | 56.0 | 75.0 | 75.0 | 90.0 | 90.0 | 95.0 | 95.0 |
| 48" | | X X | X X | X X | X X | 75.0 | 75.0 | 90.0 | 90.0 | 95.0 | 95.0 |
| 54" | | X X | X X | X X | X X | 75.0 | 75.0 | 80.0 | 80.0 | 95.0 | 95.0 |
| 60" | | X X | X X | X X | X X | 72.0 | 72.0 | 72.0 | 72.0 | 90.3 | 90.3 |
| 66" | | X X | X X | X X | X X | X X | X X | X X | X X | 82.1 | 82.1 |
| 72" | | X X | X X | X X | X X | X X | X X | X X | X X | 75.3 | 75.3 |
| 36" | 84" | X X | X X | 58.9 | 58.9 | 75.0 | 75.0 | 90.0 | 90.0 | 95.0 | 95.0 |
| 42" | | X X | X X | X X | X X | 75.0 | 75.0 | 90.0 | 90.0 | 95.0 | 95.0 |
| 48" | | X X | X X | X X | X X | 75.0 | 75.0 | 87.4 | 87.4 | 95.0 | 95.0 |
| 54" | | X X | X X | X X | X X | 75.0 | 75.0 | 77.7 | 77.7 | 95.0 | 95.0 |
| 60" | | X X | X X | X X | X X | X X | X X | X X | X X | 92.9 | 92.9 |
| 66" | | X X | X X | X X | X X | X X | X X | X X | X X | 84.5 | 84.5 |
| 72" | | X X | X X | X X | X X | X X | X X | X X | X X | 77.4 | 77.4 |
| 36" | 96" | X X | X X | X X | X X | 75.0 | 75.0 | 90.0 | 90.0 | 95.0 | 95.0 |
| 42" | | X X | X X | X X | X X | 75.0 | 75.0 | 90.0 | 90.0 | 95.0 | 95.0 |
| 48" | | X X | X X | X X | X X | 75.0 | 75.0 | 77.7 | 77.7 | 95.0 | 95.0 |
| 54" | | X X | X X | X X | X X | X X | X X | X X | X X | 95.0 | 95.0 |
| 60" | | X X | X X | X X | X X | X X | X X | X X | X X | 94.9 | 94.9 |
| 66" | | X X | X X | X X | X X | X X | X X | X X | X X | 86.2 | 86.2 |
| 72" | | X X | X X | X X | X X | X X | X X | X X | X X | 79.0 | 79.0 |
| 36" | 102" | X X | X X | X X | X X | 75.0 | 75.0 | 90.0 | 90.0 | 95.0 | 95.0 |
| 42" | | X X | X X | X X | X X | 75.0 | 75.0 | 90.0 | 90.0 | 95.0 | 95.0 |
| 48" | | X X | X X | X X | X X | X X | X X | X X | X X | 95.0 | 95.0 |
| 54" | | X X | X X | X X | X X | X X | X X | X X | X X | 95.0 | 95.0 |
| 60" | | X X | X X | X X | X X | X X | X X | X X | X X | 89.3 | 89.3 |
| 66" | | X X | X X | X X | X X | X X | X X | X X | X X | 81.2 | 81.2 |
| 36" | 108" | X X | X X | X X | X X | 75.0 | 75.0 | 90.0 | 90.0 | 95.0 | 95.0 |
| 42" | | X X | X X | X X | X X | 75.0 | 75.0 | 89.7 | 89.7 | 95.0 | 95.0 |
| 48" | | X X | X X | X X | X X | X X | X X | X X | X X | 95.0 | 95.0 |
| 54" | | X X | X X | X X | X X | X X | X X | X X | X X | 95.0 | 95.0 |
| 60" | | X X | X X | X X | X X | X X | X X | X X | X X | 95.0 | 95.0 |
| 66" | | X X | X X | X X | X X | X X | X X | X X | X X | 86.4 | 86.4 |
| 36" | 114" | X X | X X | X X | X X | 75.0 | 75.0 | 90.0 | 90.0 | 95.0 | 95.0 |
| 42" | | X X | X X | X X | X X | X X | X X | X X | X X | 95.0 | 95.0 |
| 48" | | X X | X X | X X | X X | X X | X X | X X | X X | 95.0 | 95.0 |
| 54" | | X X | X X | X X | X X | X X | X X | X X | X X | 95.0 | 95.0 |
| 60" | | X X | X X | X X | X X | X X | X X | X X | X X | 91.3 | 91.3 |
| 36" | 120" | X X | X X | X X | X X | 75.0 | 75.0 | 90.0 | 90.0 | 95.0 | 95.0 |
| 42" | | X X | X X | X X | X X | X X | X X | X X | X X | 95.0 | 95.0 |
| 48" | | X X | X X | X X | X X | X X | X X | X X | X X | 95.0 | 95.0 |
| 54" | | X X | X X | X X | X X | X X | X X | X X | X X | 95.0 | 95.0 |
| 60" | | X X | X X | X X | X X | X X | X X | X X | X X | 95.0 | 95.0 |

## DESIGN LOAD CAPACITY – PSF

| WINDOW DIMS. | | GLASS TYPE 'A' | | GLASS TYPE 'B' | | GLASS TYPE 'C' | | GLASS TYPE 'D' | | GLASS TYPE 'E' | |
|---|---|---|---|---|---|---|---|---|---|---|---|
| WIDTH | LENGTH | EXT. (+) | INT. (–) | EXT. (+) | INT. (–) | EXT. (+) | INT. (–) | EXT. (+) | INT. (–) | EXT. (+) | INT. (–) |
| 36" | 126" | X X | X X | X X | X X | 75.0 | 75.0 | 90.0 | 90.0 | 95.0 | 95.0 |
| 42" | | X X | X X | X X | X X | X X | X X | X X | X X | 95.0 | 95.0 |
| 48" | | X X | X X | X X | X X | X X | X X | X X | X X | 95.0 | 95.0 |
| 54" | | X X | X X | X X | X X | X X | X X | X X | X X | 95.0 | 95.0 |
| 36" | 132" | X X | X X | X X | X X | X X | X X | X X | X X | 95.0 | 95.0 |
| 42" | | X X | X X | X X | X X | X X | X X | X X | X X | 95.0 | 95.0 |
| 48" | | X X | X X | X X | X X | X X | X X | X X | X X | 95.0 | 95.0 |
| 54" | | X X | X X | X X | X X | X X | X X | X X | X X | 95.0 | 95.0 |
| 36" | 138" | X X | X X | X X | X X | X X | X X | X X | X X | 95.0 | 95.0 |
| 42" | | X X | X X | X X | X X | X X | X X | X X | X X | 95.0 | 95.0 |
| 48" | | X X | X X | X X | X X | X X | X X | X X | X X | 95.0 | 95.0 |
| 36" | 144" | X X | X X | X X | X X | X X | X X | X X | X X | 95.0 | 95.0 |
| 42" | | X X | X X | X X | X X | X X | X X | X X | X X | 95.0 | 95.0 |
| 48" | | X X | X X | X X | X X | X X | X X | X X | X X | 95.0 | 95.0 |

## DESIGN LOAD CAPACITY X PSF

| WINDOW DIMS. | | GLASS TYPE 'A' | | GLASS TYPE 'B' | | GLASS TYPE 'C' | | GLASS TYPE 'D' | | GLASS TYPE 'E' | |
|---|---|---|---|---|---|---|---|---|---|---|---|
| WIDTH | LENGTH | EXT. (+) | INT. (X) | EXT. (+) | INT. (X) | EXT. (+) | INT. (X) | EXT. (+) | INT. (X) | EXT. (+) | INT. (X) |
| 19–1/8" | 26" | 62.0 | 62.0 | 59.0 | 59.0 | 75.0 | 75.0 | 90.0 | 90.0 | 95.0 | 95.0 |
| 26–1/2" | | 62.0 | 62.0 | 59.0 | 59.0 | 75.0 | 75.0 | 90.0 | 90.0 | 95.0 | 95.0 |
| 37" | | 62.0 | 62.0 | 59.0 | 59.0 | 75.0 | 75.0 | 90.0 | 90.0 | 95.0 | 95.0 |
| 53–1/8" | | 62.0 | 62.0 | 59.0 | 59.0 | 75.0 | 75.0 | 90.0 | 90.0 | 95.0 | 95.0 |
| 19–1/8" | 38–3/8" | 62.0 | 62.0 | 59.0 | 59.0 | 75.0 | 75.0 | 90.0 | 90.0 | 95.0 | 95.0 |
| 26–1/2" | | 62.0 | 62.0 | 59.0 | 59.0 | 75.0 | 75.0 | 90.0 | 90.0 | 95.0 | 95.0 |
| 37" | | 62.0 | 62.0 | 59.0 | 59.0 | 75.0 | 75.0 | 90.0 | 90.0 | 95.0 | 95.0 |
| 53–1/8" | | 59.8 | 59.8 | 59.0 | 59.0 | 75.0 | 75.0 | 90.0 | 90.0 | 95.0 | 95.0 |
| 19–1/8" | 50–5/8" | 62.0 | 62.0 | 59.0 | 59.0 | 75.0 | 75.0 | 90.0 | 90.0 | 95.0 | 95.0 |
| 26–1/2" | | 62.0 | 62.0 | 59.0 | 59.0 | 75.0 | 75.0 | 90.0 | 90.0 | 95.0 | 95.0 |
| 37" | | 62.0 | 62.0 | 59.0 | 59.0 | 75.0 | 75.0 | 90.0 | 90.0 | 95.0 | 95.0 |
| 53–1/8" | | 45.3 | 45.3 | 59.0 | 59.0 | 75.0 | 75.0 | 85.3 | 85.3 | 95.0 | 95.0 |
| 19–1/8" | 63" | 62.0 | 62.0 | 59.0 | 59.0 | 75.0 | 75.0 | 90.0 | 90.0 | 95.0 | 95.0 |
| 26–1/2" | | 62.0 | 62.0 | 59.0 | 59.0 | 75.0 | 75.0 | 90.0 | 90.0 | 95.0 | 95.0 |
| 37" | | 57.6 | 57.6 | 59.0 | 59.0 | 75.0 | 75.0 | 90.0 | 90.0 | 95.0 | 95.0 |
| 53–1/8" | | X X | X X | X X | X X | 75.0 | 75.0 | 81.3 | 81.3 | 95.0 | 95.0 |
| 19–1/8" | 74–1/4" | 62.0 | 62.0 | 59.0 | 59.0 | 75.0 | 75.0 | 90.0 | 90.0 | 95.0 | 95.0 |
| 26–1/2" | | 62.0 | 62.0 | 59.0 | 59.0 | 75.0 | 75.0 | 90.0 | 90.0 | 95.0 | 95.0 |
| 37" | | X X | X X | 59.0 | 59.0 | 75.0 | 75.0 | 90.0 | 90.0 | 95.0 | 95.0 |
| 53–1/8" | | X X | X X | X X | X X | 75.0 | 75.0 | 81.3 | 81.3 | 95.0 | 95.0 |

**PRODUCT REVISED**
**as complying with the Florida Building Code**
**Acceptance No** 06-0320.07
**Expiration Date** JAN 08 2007
**By** Shaq I. Khanda
**Miami-Dade Product Control Division**

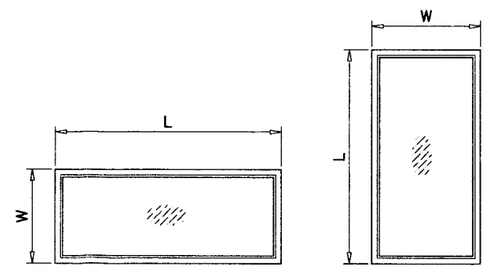


NOTE:
WIDTH AND LENGTH DIMENSIONS CAN BE ORIENTED VERTICALLY OR HORIZONTALLY AS SHOWN ABOVE.

NOTE:
GLASS CAPACITIES ON THIS SHEET ARE BASED ON
A: ASTM E1300–98 (60 SEC. WIND)
B: ASTM E1300–02 (3 SEC. GUSTS)

Engr: DR. HUMAYOUN FAROOQ
STRUCTURES
FLA. PE # 16557
C.A.N. 3538

JUN 13 2006


AL-FAROOQ CORPORATION
ENGINEERS, PLANNERS & PRODUCT DESIGN
1235 SW 87 AVE
MIAMI, FLORIDA 33174
TEL. (305) 264-8100 FAX. (305) 262-6978
COMP-ANL\W03-52TMW


SERIES 338 ALUMINUM FIXED WINDOW (L.M.I.)

**TM WINDOW AND DOOR**
601 N.W. 12TH AVE.
POMPANO BEACH, FL. 33069
TEL. (954) 781-4430 FAX. (954) 781-5078

revisions:

| no | date | by | description |
|---|---|---|---|
| A | 12.05.03 | | REV. PER BCCO COMMENTS |
| B | 02.24.06 | | GLASS NOTE ADDED |
| C | 06.12.06 | | NO CHANGE THIS SHEET |

date: 07-11-03
scale: 1/2" = 1"
dr. by: HAMID
chk. by:

drawing no.
W03-52

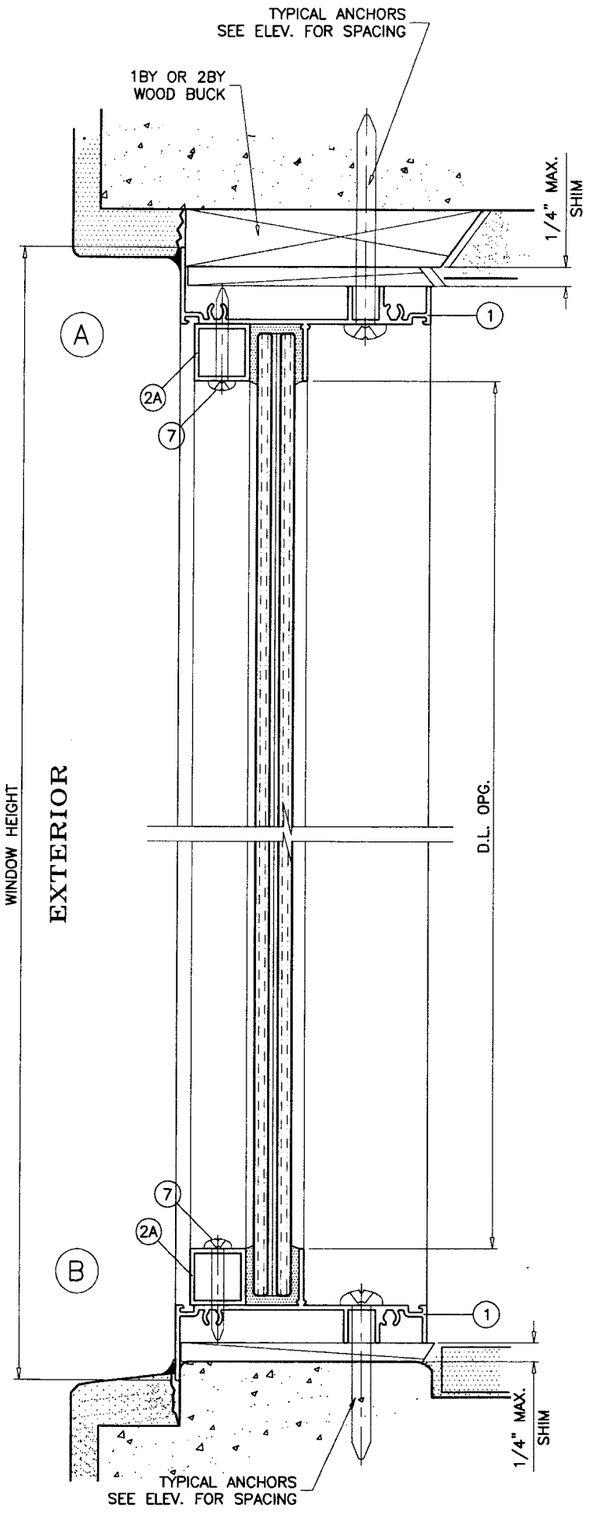


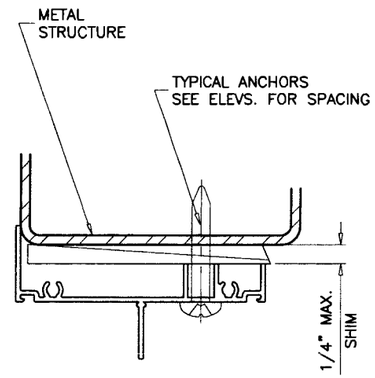


## TYPICAL ANCHORS: SEE ELEV. FOR SPACING

**1/4" TAPCONS**

INTO WOOD STRUCTURES
1-3/4" MIN. PENETRATION INTO WOOD

THRU 1BY OR 2BY WOOD BUCKS INTO MASONRY OR 3000 PSI MIN. CONC.
1-1/4" MIN. EMBED INTO MASONRY OR CONC.

DIRECTLY INTO MASONRY OR 3000 PSI MIN. CONC.
1-1/4" MIN. EMBED INTO MASONRY OR CONC.

**#14 DRILLFLEX OR SELF DRILLING SCREWS** (SAE GRADE 5 Fy MIN.=92 KSI)

INTO METAL STRUCTURES

STEEL : 12 GA. (.105") MIN. (Fy = 36 KSI MIN.)
ALUMINUM : 1/8" THK. MIN. (6063-T5 MIN.)
(STEEL IN CONTACT WITH ALUMINUM TO BE PLATED OR PAINTED)

**#14 SMS**

INTO APPROVED MULLIONS (NO SHIM SPACE)

**TYPICAL EDGE DISTANCE**

INTO CONCRETE AND MASONRY = 2" MIN.
INTO WOOD STRUCTURE = 1" MIN.
INTO METAL STRUCTURE = 3/4" MIN.

## SEALANT:

FRAME CORNERS SEALED WITH SILICONE.

WOOD BUCKS AND METAL STRUCTURES NOT BY TM WINDOWS, MUST SUPPORT LOADS IMPOSED BY GLAZING SYSTEM AND TRANSFER THEM TO THE BUILDING STRUCTURE.

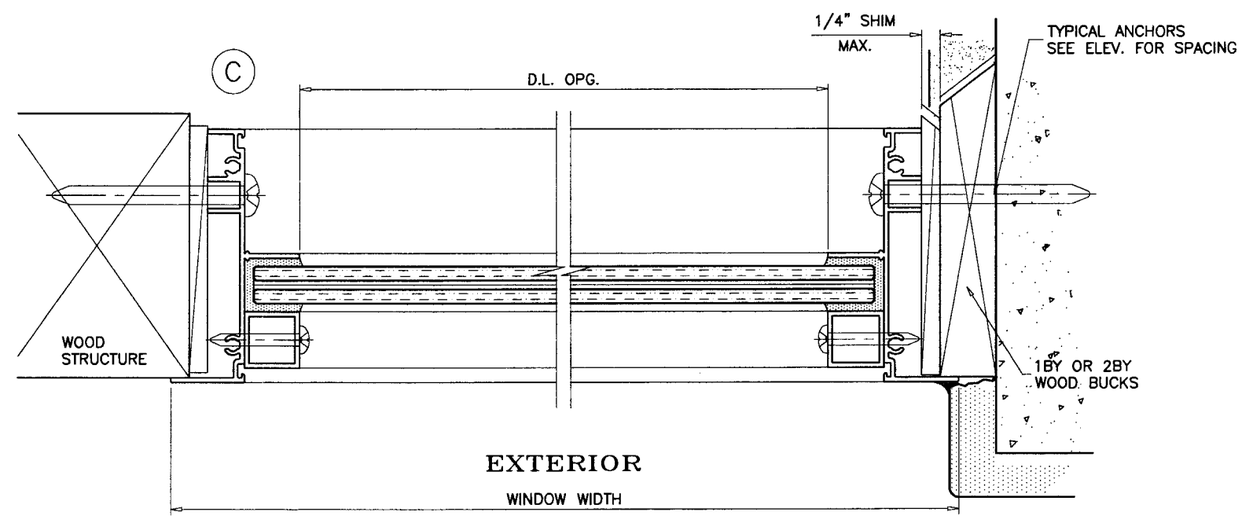


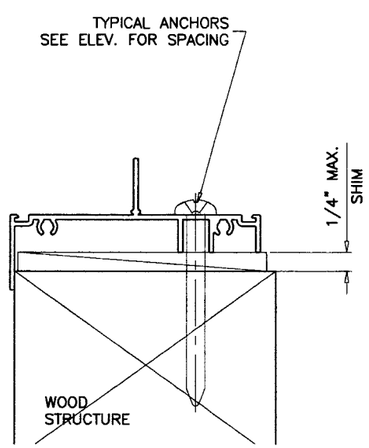


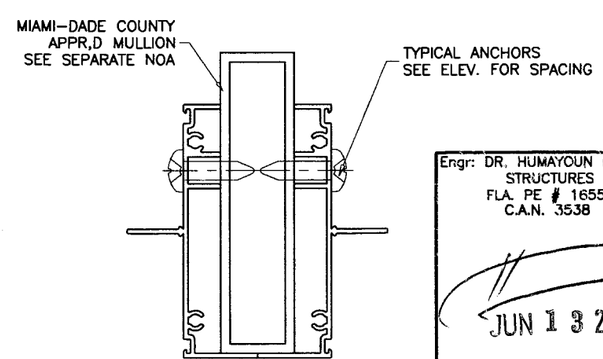


**PRODUCT REVISED**
**as complying with the Florida Building Code**
**Acceptance No** 06-0320.07
**Expiration Date** JAN 08, 2009
**By** Ishaq I. Chanda
**Miami Dade Product Control Division**

Engr: DR. HUMAYOUN FAROOQ
STRUCTURES
FLA. PE # 16557
C.A.N. 3538

JUN 1 3 2006


AL-FAROOQ CORPORATION
ENGINEERS, PLANNERS & PRODUCT DESIGN
1235 SW 87 AVE
MIAMI, FLORIDA 33174
TEL. (305) 264-8100 FAX. (305) 262-6978
COMP-ANL\W03-52TMW


SERIES 338 ALUMINUM FIXED WINDOW (L.M.I.)

**TM WINDOW AND DOOR**
601 N.W. 12TH AVE.
POMPANO BEACH, FL. 33069
TEL. (954) 781-5078 FAX. (954) 781-4430

revisions:

| no | date | by | description |
|---|---|---|---|
| A | 12.05.03 | | REV. PER BCCO COMMENTS |
| B | 02.24.06 | | ANCHORS REV. |
| C | 06.12.06 | | REV. PER BCCO COMMENTS |

date: 07-11-03
scale: 1/2" = 1"
dr. by: HAMID
chk. by:

drawing no.
W03-52

sheet 3 of 4

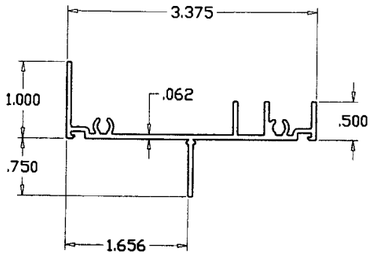


1 WINDOW FRAME

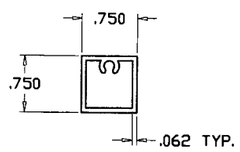


2 GLAZING STOP TUBE

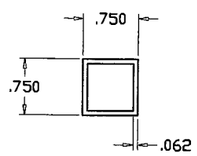


2A GLAZING STOP TUBE

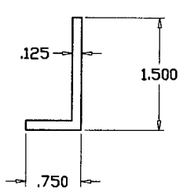


3 GLAZING STOP EXTERIOR ANGLE

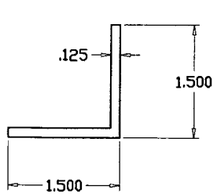


4 GLAZING STOP INTERIOR ANGLE

| ITEM | PART # | QUANTITY | DESCRIPTION | MATERIAL | MANF./SUPPLIER/REMARKS |
|---|---|---|---|---|---|
| 1 | GW-35277-A | 4 | WINDOW FRAME | 6063-T6 | – |
| 2 | 1296 | AS REQD. | GLAZING STOP TUBE | 6063-T5 | – |
| 2A | PW-338 | AS REQD. | GLAZING STOP TUBE | 6063-T5 | – |
| 3 | BPA-1960 | AS REQD. | GLAZING STOP EXTERIOR ANGLE | 6063-T5 | – |
| 4 | BPA-1960 | AS REQD. | GLAZING STOP INTERIOR ANGLE | 6063-T5 | – |
| 5 | – | AS REQD. | GLAZING TAPE, FULL LENGTH | – | 3/16" X 1/2" |
| 6 | #10 X 1" | – | FRAME ASSEMBLY SCREWS | – | P.H. SMS |
| 7 | #10 X 1-1/4" | – | GLAZING STOP SCREWS | – | P.H. SMS |
| 8 | S500 | – | GLAZING COMPOUND | SILICONE | TREMCO TREMGLAZE |
| 8A | GE1200 | – | GLAZING COMPOUND | SILICONE | GE |

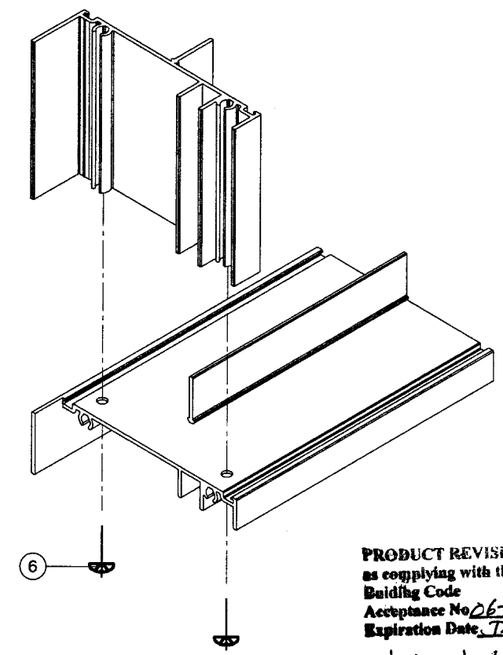


TYP. CORNER DETAIL

**PRODUCT REVISED**
**as complying with the Florida Building Code**
**Acceptance No** 06-0320.07
**Expiration Date** JAN 08, 2009
**By** Ishaq I. Chanda
**Miami Dade Product Control Division**

Engr: DR. HUMAYOUN FAROOQ
STRUCTURES
FLA. PE # 16557
C.A.N. 3538

JUN 13 2006


**AL-FAROOQ CORPORATION**
ENGINEERS, PLANNERS & PRODUCT DESIGN
1235 SW 87 AVE
MIAMI, FLORIDA 33174
TEL. (305) 264-8100 FAX. (305) 262-6978
COMP-ANL\W03-52TMW


SERIES 338 ALUMINUM FIXED WINDOW (L.M.I.)

**TM WINDOW AND DOOR**
601 N.W. 12TH AVE.
POMPANO BEACH, FL. 33069
TEL. (954) 781-4430 FAX. (954) 781-5078

revisions:

| no | date | by | description |
|---|---|---|---|
| A | 12.05.03 | | REV. PER BCCO COMMENTS |
| B | 02.24.06 | | NO CHANGE THIS SHEET |
| C | 06.12.06 | | NO CHANGE THIS SHEET |

date: 07-11-03
scale: 1/2" = 1"
dr. by: HAMID
chk. by:

drawing no.
W03-52

sheet 4 of 4