MIAMI-DADE COUNTY

BUILDING CODE COMPLIANCE OFFICE (BCCO)
PRODUCT CONTROL DIVISION

MIAMI-DADE COUNTY, FLORIDA
METRO-DADE FLAGLER BUILDING
140 WEST FLAGLER STREET, SUITE 1603
MIAMI, FLORIDA 33130-1563
(305) 375-2901 FAX (305) 375-2908
www.buildingcodeonline.com

NOTICE OF ACCEPTANCE (NOA)

Kawneer Company, Inc.
555 Guthridge Court
Norcross, GA 30092

SCOPE:

This NOA is being issued under the applicable rules and regulations governing the use of construction materials. The documentation submitted has been reviewed by Miami-Dade County Product Control Division and accepted by the Board of Rules and Appeals (BORA) to be used in Miami Dade County and other areas where allowed by the Authority Having Jurisdiction (AHJ).

This NOA shall not be valid after the expiration date stated below. The Miami-Dade County Product Control Division (In Miami Dade County) and/or the AHJ (in areas other than Miami Dade County) reserve the right to have this product or material tested for quality assurance purposes. If this product or material fails to perform in the accepted manner, the manufacturer will incur the expense of such testing and the AHJ may immediately revoke, modify, or suspend the use of such product or material within their jurisdiction. BORA reserves the right to revoke this acceptance, if it is determined by Miami-Dade County Product Control Division that this product or material fails to meet the requirements of the applicable building code.

This product is approved as described herein, and has been designed to comply with the Florida Building Code, including the High Velocity Hurricane Zone.

DESCRIPTION: Series "1600 System1" No Steel Reinforcement Aluminum Curtain Wall – L.M.I.

APPROVAL DOCUMENT: Drawing No. **NOA162-100**, titled "Product Approval Drawings 1600 System1-L.M.I. (No Steel) 9/16" & 1-5/16" (.090 PVB) Protocols- TAS 201/202/203 ASTM E 1886/1996", sheets 1 through 8, prepared by manufacturer, dated 05/27/05, signed and sealed by Ballard L. Argus P.E., and bearing the Miami-Dade County Product Control Approval stamp with the Notice of Acceptance number and approval date by the Miami-Dade County Product Control Division.

MISSILE IMPACT RATING: Large and Small Missile Impact

LABELING: Each unit shall bear a permanent label with the manufacturer's name or logo, city, state and following statement: "Miami-Dade County Product Control Approved", unless otherwise noted herein.

RENEWAL of this NOA shall be considered after a renewal application has been filed and there has been no change in the applicable building code negatively affecting the performance of this product.

TERMINATION of this NOA will occur after the expiration date or if there has been a revision or change in the materials, use, and/or manufacture of the product or process. Misuse of this NOA as an endorsement of any product, for sales, advertising or any other purposes shall automatically terminate this NOA. Failure to comply with any section of this NOA shall be cause for termination and removal of NOA.

ADVERTISEMENT: The NOA number preceded by the words Miami-Dade County, Florida, and followed by the expiration date may be displayed in advertising literature. If any portion of the NOA is displayed, then it shall be done in its entirety.

INPECTION: A copy of this entire NOA shall be provided to the user by the manufacturer or its distributors and shall be available for inspection at the job site at the request of the Building Official.

This NOA consists of this page 1 and evidence pages E-1, as well as approval document mentioned above.

The submitted documentation was reviewed by **Jaime D. Gascon, P.E.**

PRODUCT CONTROL ACCEPTED

J. Gascon
6/2/06

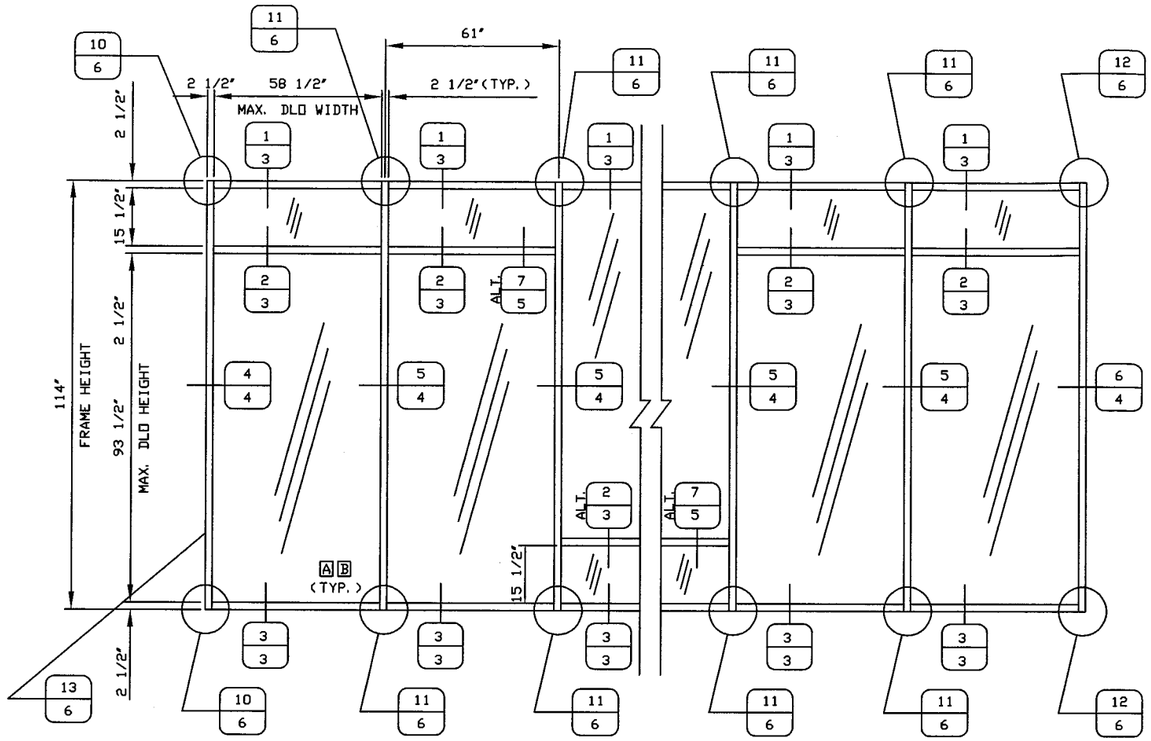

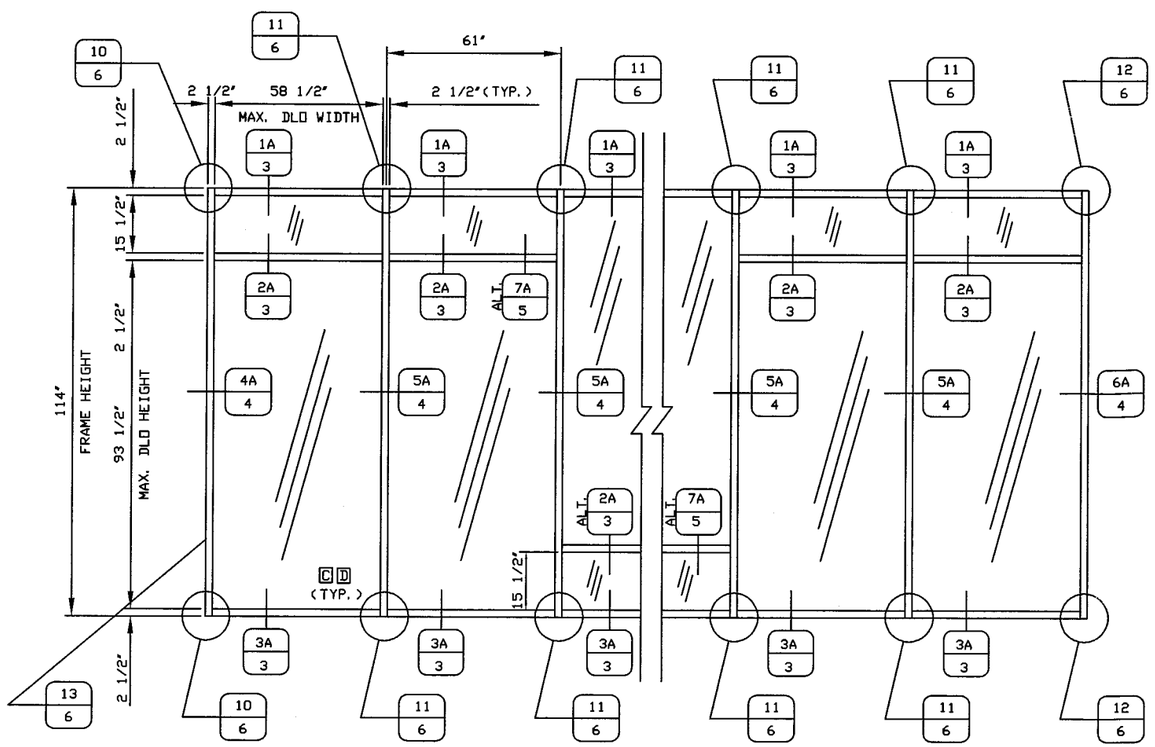

DADE COUNTY PRODUCT APPROVAL DWGS
KAWNEER 1600 SYSTEM1 CURTAIN WALL
LARGE MISSILE IMPACT
9/16" & 1 5/16" (0.090PVB)
LAMINATED GLASS

TYPICAL ELEVATION
SINGLE SPAN WITH
NO STEEL REINFORCEMENT

DESIGN PRESSURE
162-016:9/16" LAM. (+/- 65 PSF)

162-004:1-5/16" IG LAM. (+/- 90 PSF)

NOTES:

1. THE CURTAIN WALL SYSTEM HAS BEEN DESIGNED IN ACCORDANCE WITH THE 2004 FLORIDA BUILDING CODE (FBC) INCLUDING HIGH VELOCITY HURRICANE ZONES (HVHZ), PROTOCOLS TAS 201, 202 & 203, AND ASTM1300-02.
2. NO 33-1/3% INCREASE IN ALLOWABLE STRESS HAS BEEN USED IN THE DESIGN OF THIS SYSTEM, WIND LOAD DURATION FACTOR Cd=1.6 HAS BEEN USED FOR WOOD ANCHOR DESIGN.
3. PROPER SUPPORT AT HEAD, SILL, AND/OR JAMB MUST BE PROPERLY DESIGNED, CONSTRUCTED & INSTALLED TO SUPPORT LOADS TRANSFERED FROM CURTAIN WALL SYSTEM.
4. THERE SHALL BE NO LIMIT TO THE NUMBER OF HORIZONTAL & VERTICAL PANELS USED FOR ANY JOB PROVIDING ALL RESTRICTIONS ARE MET PER THE ELEVATIONS.
5. HORIZONTAL MULLION (DETAIL 7 & 7A/5 IS OPTIONAL AT ANY LOCATION IN ANY BAY UP TO MAX. DLO HEIGHT OF 93-1/2" X 59-1/2" MAX. DLO WIDTH.
6. SEE SHEET 6 OF 8 FOR PERIMETR FASTENER AND PERIMETER ANCHOR FASTENER INFORMATION.
7. ALL SUBSTRATE SHALL HAVE THE FOLLOWING MINIMUM REQUIREMENTS.
   a) ALL CONCRETE SUBSTRATE SHALL BE MIN. 3000 PSI.
   b) ALL WOOD SUBSTRATE SHALL BE MIN. G = 0.55 DENSITY.
   c) ALL METAL STUD SUBSTRATE SHALL BE MIN. 18 GA. Fy = 50 ksi.
8. SEE SHEET 2 OF 8 FOR GLAZING OPTIONS A B C D .
9. STANDARD INSTALLATION INSTRUCTIONS ARE TO BE USED IN CONJUNCTION WITH THESE PRODUCT DRAWINGS.
10. DLO = DAYLIGHT OPENING.
11. ALUMINUM ALLOY 6063-T6.

HURRICANE PROTECTION SYSTEM (SHUTTERS):
THE INSTALLATION OF THIS PRODUCT WILL NOT REQUIRE THE USE OF A HURRICANE PROTECTION SYSTEM.

REV.	DATE	REQUEST LETTER	BY

EC 95502-10 ESTABLISHED 2/01/06

BALLARD L. ARGUS, P.E.
530 WEST PINE STREET
SUITE 5
PONCHATOULA, LA 70454
985-386-4599

3/10/06
FLORIDA #35686, CIVIL

THIS DRAWING IS FOR DADE COUNTY PRODUCT APPROVAL ONLY

Approved as complying with the Florida Building Code
Date 06/22/06
NOA# 06-0320.19
Miami-Dade Product Control Division
By

Kawneer
An Alcoa Company
555 GUTHRIDGE COURT
NORCROSS, GEORGIA 30092
PHONE (770) 449-5555
FAX (770) 734-1560

PRODUCT APPROVAL DRAWINGS
1600 SYSTEM1-LMI (NO STEEL)
9/16" & 1-5/16" (.090 PVB)
PROTOCOLS-TAS 201/202/203
ASTM E1886/1996

SCALE:

DRAWN BY DEH
DATE 05/27/05
DRWG. NO. NOA162-100
SHEET 1 of 8
NOA162-100-001

MATERIAL LIST

#	PART NO.	DESCRIPTION	DIMENSIONS	MATERIAL
GLAZING ACCESORIES AND SEALANTS				
1	027-850	FIXED GASKET	0.250 SPACE	EPDM
2	027-857	FIXED GASKET	0.250 SPACE	EPDM
3	809-111	V2100 NORTON TAPE	0.250 x 0.250 TAPE	NORTON FOAM TAPE
4	162-310	THERMAL SEPARATOR	0.250 SPACE	EPDM
5	027-081	SETTING BLOCK	0.188 x 1.250 x 4.125	EPDM
6	027-342	SETTING BLOCK	0.188 x 0.563 x 4.125	NEOPRENE
7	027-367	SETTING BLOCK	0.437 x 0.750 x 4.125	NEOPRENE
8	027-853	SETTING BLOCK	0.437 x 1.375 x 4.125	EPDM
9	-	STRUCTURAL SILICONE	0.563 x 0.250	DOW CORNING 995 TREMCO SPECTREM2
MISC. FASTENERS				
14	028-843	MULLION TO JAMB ANCHOR	#12 x 1/2" B FHTF	300 SERIES S.S.
15	128-284	SHEAR BLOCK ATTACHMENT SCREW	#12 x 1-1/2" FHTFS	300 SERIES S.S.
16	128-394	SHEAR BLOCK ATTACHMENT SCREW	#12 x 1 7/8" B PHTF	430 SERIES S.S.
17	128-396	SHEAR BLOCK ATTACHMENT SCREW	#12 x 7/16" PHTFS	300 SERIES S.S.
18	128-405	SHEAR BLOCK ATTACHMENT SCREW	#12 x 7/8" AB FHTF	300 SERIES S.S.
19	128-406	PRESSURE PLATE SCREW	1/4" x 1" HWHTF	300 SERIES S.S.
PARTS				
24	162-332	HEAD/SILL SHEAR BLOCK	2.115 x 4.520 x 0.125 x 1.562	6063-T6 ALUMINUM
25	162-312	"T" ANCHOR	8.000 x 3.250 x 0.250 x 4.875	6063-T6 ALUMINUM
26	162-518	PER. OFFSET PRESSURE PLATE	2.500 x 1.347 x 0.100	6063-T6 ALUMINUM
27	162-097	HEAD /SILL HORIZONTAL	2.500 x 5.750 x 0.100	6063-T6 ALUMINUM
28	162-006	COVER	2.500 x 0.504 x 0.050	6063-T6 ALUMINUM
29	162-378	INT. HORIZ. SHEAR BLOCK	2.270 x 4.520 x 0.125 x 1.562	6063-T6 ALUMINUM
30	162-519	INT. HORIZ. SHEAR BLOCK	2.270 x 4.750 x 0.125 x 1.250	6063-T6 ALUMINUM
31	162-517	OFFSET PRESSURE PLATE	2.500 x 0.847 x 0.100	6063-T6 ALUMINUM
32	162-016	MULLION	2.500 x 5.750 x 0.100	6063-T6 ALUMINUM
33	162-176	"F" PERIMETER	1.125 x 3.250 x 0.125	6063-T6 ALUMINUM
34	162-516	PER. OFFSET PRESSURE PLATE	2.500 x 0.847 x 0.100	6063-T6 ALUMINUM
35	162-004	MULLION	2.500 x 6.500 x 0.100	6063-T6 ALUMINUM
36	162-017	"F" PERIMETER	1.125 x 4.000 x 0.125	6063-T6 ALUMINUM
37	162-528	PER. OFFSET PRESSURE PLATE	2.500 x 2.097 x 0.100	6063-T6 ALUMINUM
38	162-095	HEAD/SILL HORIZONTAL	2.500 x 6.500 x 0.100	6063-T6 ALUMINUM
39	162-320	JAMB MULLION ANCHOR	2.270 x 4.750 x 0.125 x 1.460	6063-T6 ALUMINUM
40	162-300	STEEL REINFORCEMENT	1.750 x 4.560 x 0.164	ASTM A-36 STEEL

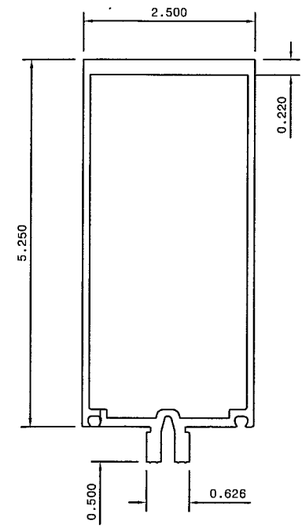

162-016

VERTICAL MULLION
(NON-REINFORCED SECTION)
$I = 9.594\ IN.^4$
$S = 3.163\ IN.^3$

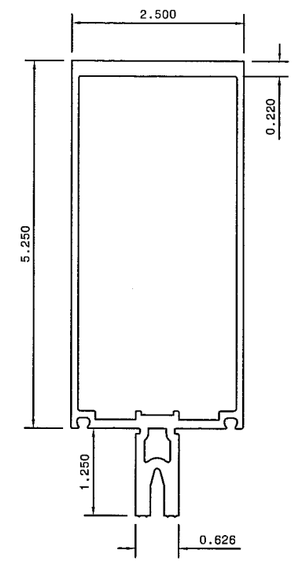

162-004

VERTICAL MULLION
(NON-REINFORCED SECTION)
$I = 12.736\ IN.^4$
$S = 3.791\ IN.^3$

162-004 MULLION REINFORCEMENT CHART			
DESIGN PRESSURE	MAX. VERTICAL MULLION SPACING	HORIZONTAL MULLIONS	162-300 STEEL REINFORCEMENT
<82 PSF	61" O.C.	YES	NO
82-90 PSF	55-1/2" O.C.	YES	NO
82-90 PSF	61" O.C.	YES	YES
90 PSF	61" O.C.	NO	NO

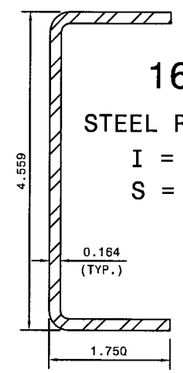

162-300

STEEL REINFORCEMENT
$I = 3.663\ IN.^4$
$S = 1.607\ IN.^3$

GLAZING OPTIONS

TYPE	NOMINAL THICKNESS	DESCRIPTION	STANDARD MULLION
A	9/16"	1/4" HS OUTBOARD / 0.090" PVB INTERLAYER (SOLUTIA) / 1/4" HS INBOARD	162-016
B	9/16"	1/4" HS OUTBOARD / 0.090 PVB INTERLAYER (DUPONT) / 1/4" HS INBOARD	162-016
C	1 5/16"	1/4" HS INBOARD / 0.090" PVB INTERLAYER (SOLUTIA) / 1/4" HS / 1/2" AIR SPACE / 1/4" HS OUTBOARD	162-004
D	1 5/16"	1/4" HS INBOARD / 0.090" PVB INTERLAYER (DUPONT) / 1/4" HS / 1/2" AIR SPACE / 1/4" HS OUTBOARD	162-004

REV.	DATE	REQUEST LETTER	BY

EC 95502-1Q ESTABLISHED 2/01/06

BALLARD L. ARGUS, P.E.
530 WEST PINE STREET
SUITE 5
PONCHATOULA, LA 70454
985-386-4599

3/10/06
FLORIDA #35686, CIVIL

THIS DRAWING IS FOR DADE COUNTY PRODUCT APPROVAL ONLY

Approved as complying with the Florida Building Code
Date 06/22/06
NOA# 06-0320.19
Miami Dade Product Control Division
By

Kawneer
An Alcoa Company
555 GUTHRIDGE COURT
NORCROSS, GEORGIA 30092
PHONE (770) 449-5555
FAX (770) 734-1560

PRODUCT APPROVAL DRAWINGS
1600 SYSTEM1-LMI (NO STEEL)
9/16" & 1-5/16" (.090PVB)
PROTOCOLS-TAS 201/202/203
ASTM E1886/1996

SCALE:

DRAWN BY: DEH
DATE: 05/27/05
DRWG. NO.: NOA162-100
SHEET: 2 of 8
NOA162-100-002

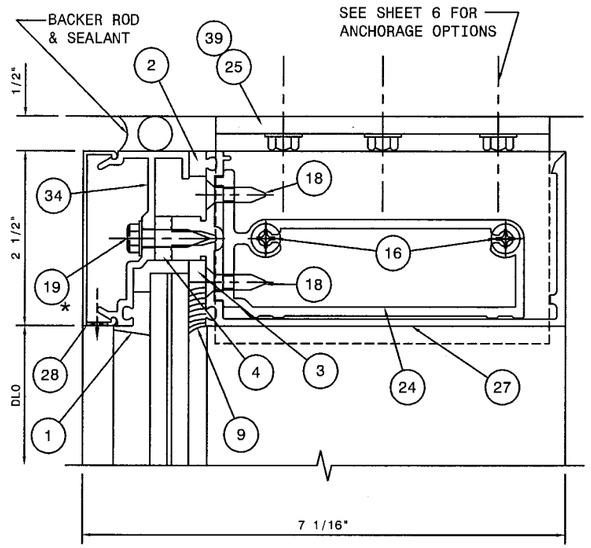

EXTERIOR 1

HEAD

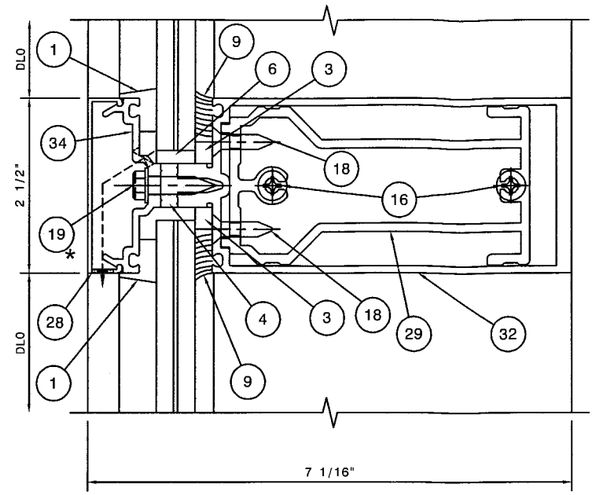

EXTERIOR 2

INT. HORIZONTAL

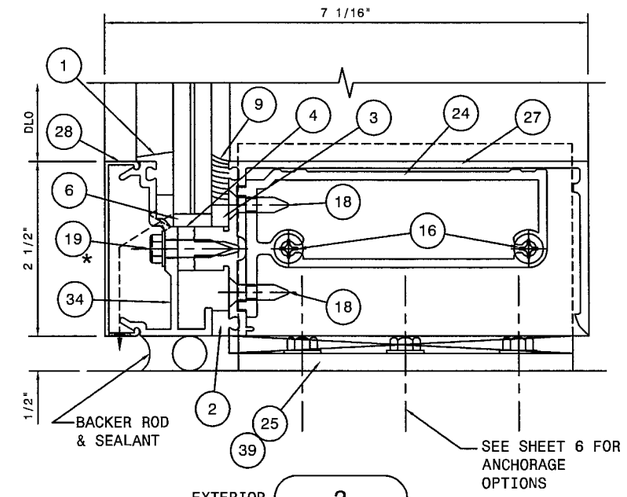

EXTERIOR 3

SILL

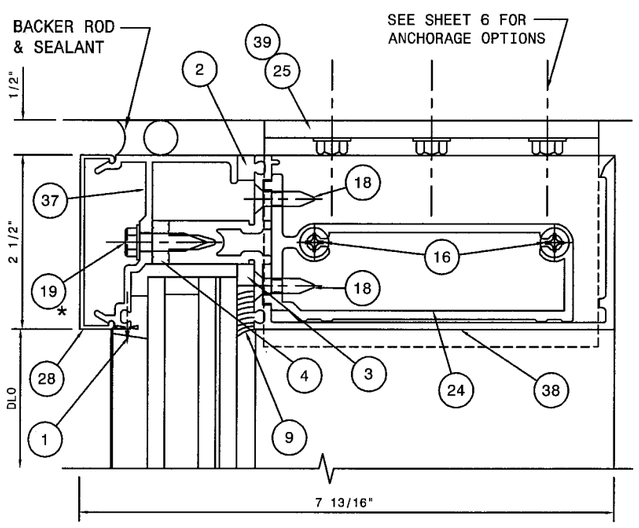

EXTERIOR 1A

HEAD

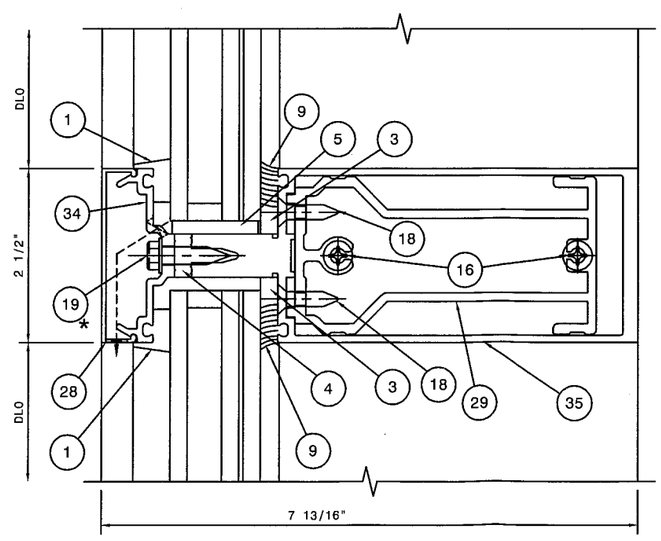

EXTERIOR 2A

INT. HORIZONTAL

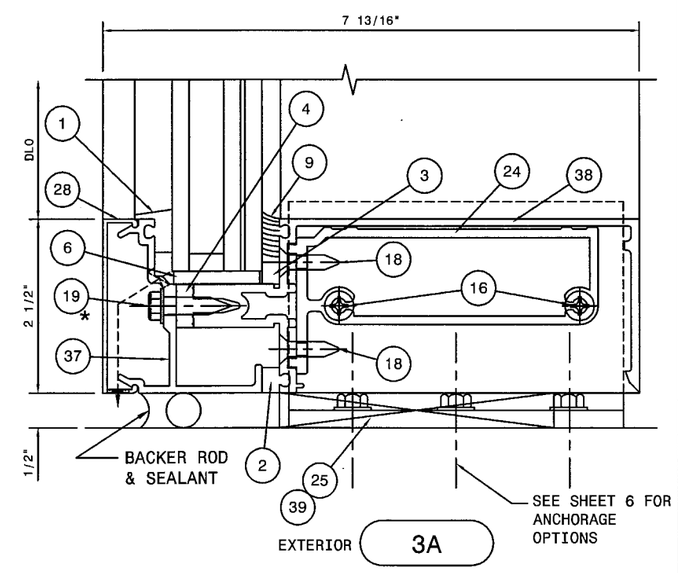

EXTERIOR 3A

SILL

REFER TO GLAZING DETAILS ON SHEET 7, 8 OF 8 FOR SPECIFIC INFORMATION REGARDING GLAZING MATERIALS AND GLASS BITE

* SPACED MAX. 9" O.C.

LARGE MISSILE IMPACT RESISTANT DETAILS

REV.	DATE	REQUEST LETTER	BY

EC 95502-10 ESTABLISHED 2/01/06

BALLARD L. ARGUS, P.E.
530 WEST PINE STREET
SUITE 5
PONCHATOULA, LA 70454
985-386-4599

3/10/06
FLORIDA #35686, CIVIL

THIS DRAWING IS FOR DADE COUNTY PRODUCT APPROVAL ONLY

Approved as complying with the Florida Building Code
Date 06/22/06
NOA# 06-0320.19
Miami-Dade Product Control Division
By

Kawneer
An Alcoa Company
555 GUTHRIDGE COURT
NORCROSS, GEORGIA 30092
PHONE (770) 449-5555
FAX (770) 734-1560

PRODUCT APPROVAL DRAWINGS
1600 SYSTEM1-LMI (NO STEEL)
9/16" & 1-5/16" (090 PVB)
PROTOCOLS-TAS 201/202/203
ASTM E1886/1996

SCALE:

DRAWN BY DEH

DATE 05/27/05

DRWG. NO. NOA162-100

SHEET 3 of 8

NOA162-100-003

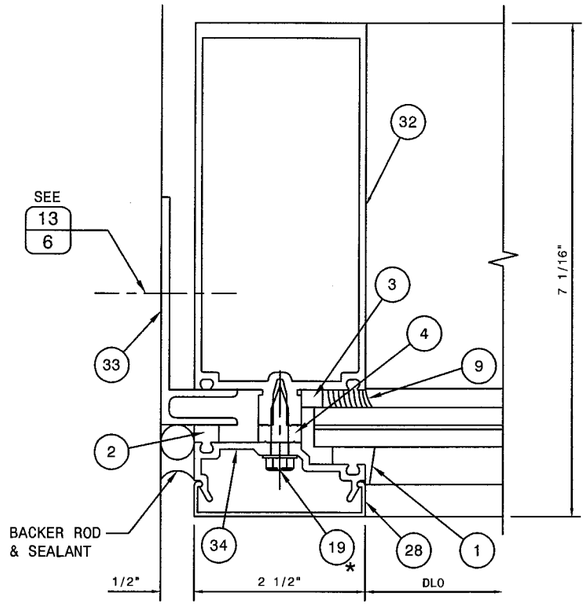

4 EXTERIOR

JAMB

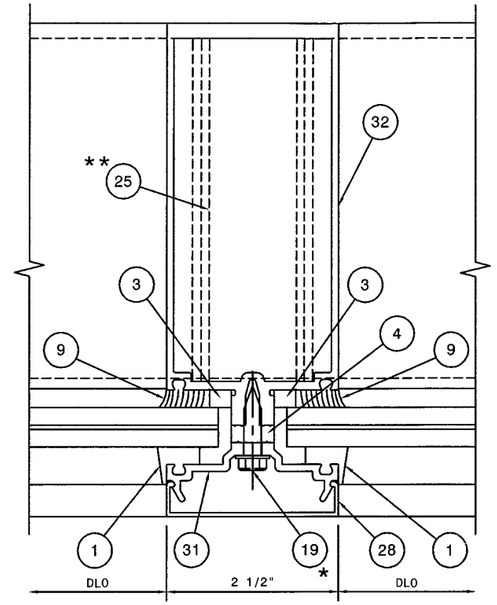

5 EXTERIOR

VERTICAL MULLION

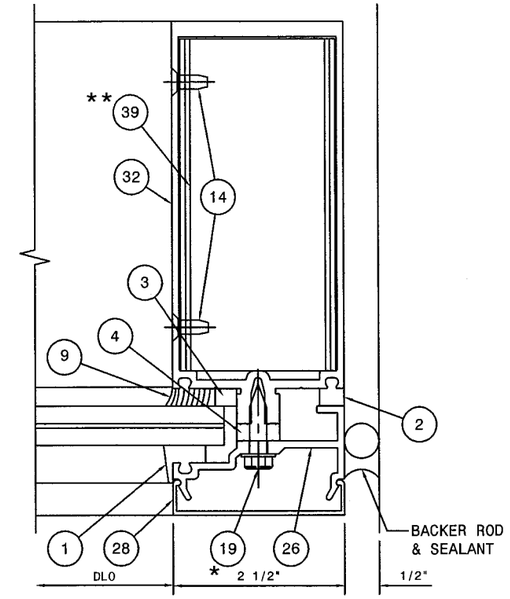

6 EXTERIOR

JAMB

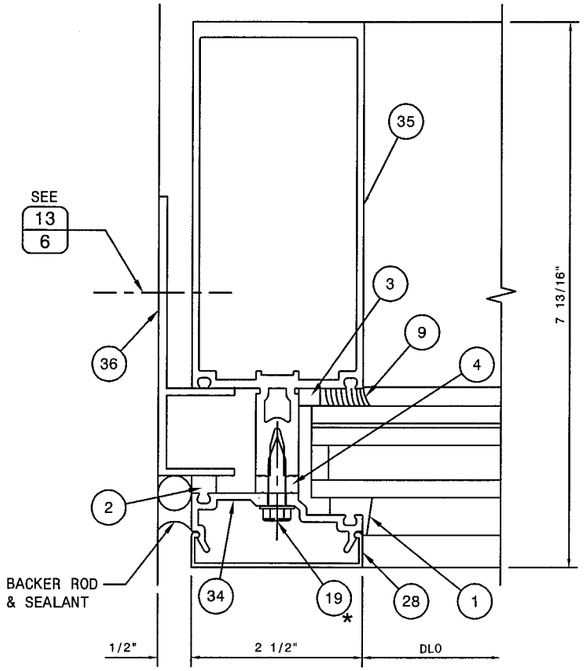

4A EXTERIOR

JAMB

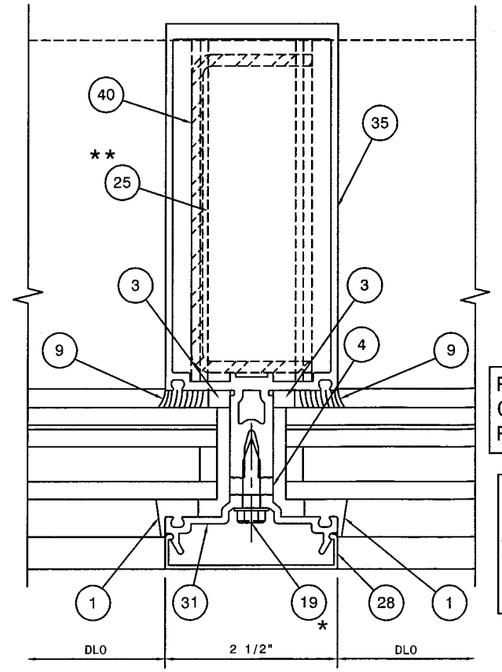

5A EXTERIOR

VERTICAL MULLION

REFER TO STEEL REINFORCEMENT CHART ON SHEET 2 FOR SPECIFIC REQUIREMENTS

REFER TO GLAZING DETAILS ON SHEET 7, 8 OF 8 FOR SPECIFIC INFORMATION REGARDING GLAZING MATERIALS AND GLASS BITE

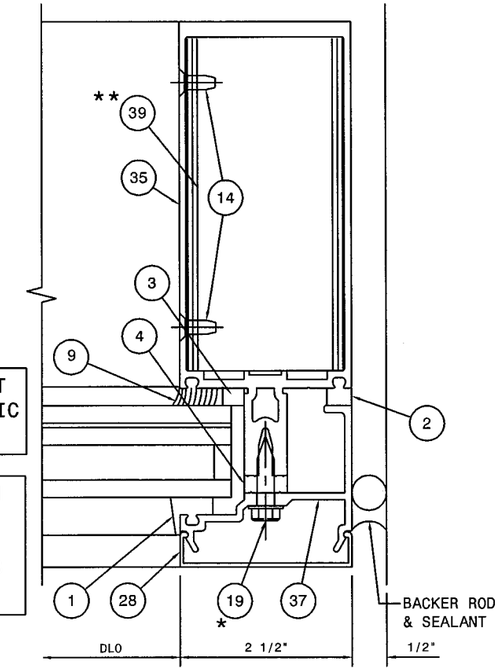

6A EXTERIOR

JAMB

* SPACED MAX. 9" O.C.
** SEE SHEET 6 FOR ANCHORAGE OPTIONS

LARGE MISSILE IMPACT RESISTANT DETAILS

REV.	DATE	REQUEST LETTER	BY

EC 95502-10 ESTABLISHED 2/01/06

BALLARD L. ARGUS, P.E.
530 WEST PINE STREET
SUITE 5
PONCHATOULA, LA 70454
985-386-4599

3/10/06
FLORIDA #35686, CIVIL

THIS DRAWING IS FOR DADE COUNTY PRODUCT APPROVAL ONLY

Approved as complying with the Florida Building Code
Date 06/22/06
NOA# 06-0320.19
Miami-Dade Product Control Division
By

Kawneer
An Alcoa Company
555 GUTHRIDGE COURT
NORCROSS, GEORGIA 30092
PHONE (770) 449-5555
FAX (770) 734-1560

PRODUCT APPROVAL DRAWINGS
1600 SYSTEM1-LMI (NO STEEL)
9/16" & 1-5/16" (090 PVB)
PROTOCOLS-TAS 201/202/203
ASTM E1886/1996

SCALE:

DRAWN BY	DATE
DEH	05/27/05

DRWG. NO. NOA162-100

SHEET 4 of 8

NOA162-100-003

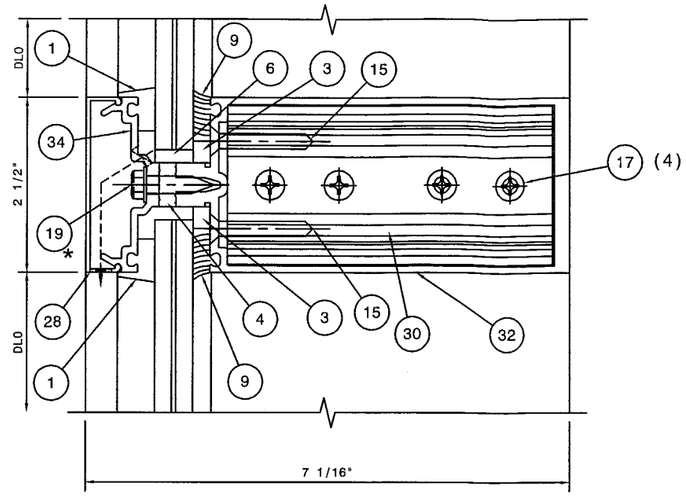

EXTERIOR 7

ALT. INT. HORIZONTAL MAY BE
USED AT ANY HORIZONTAL LOCATION

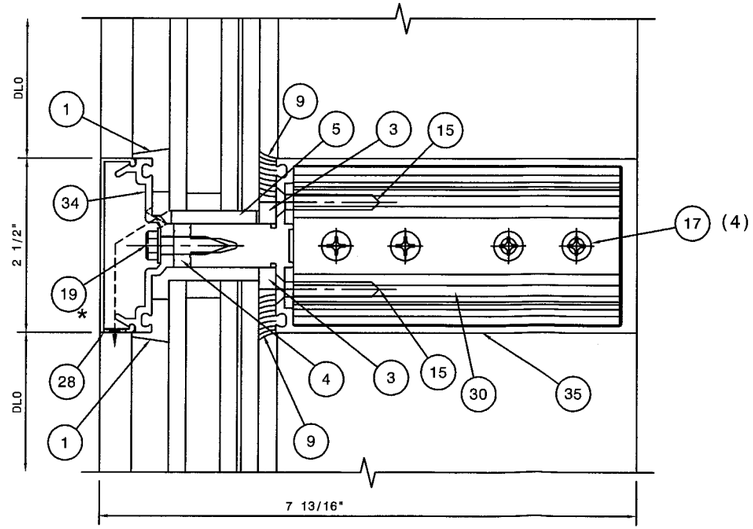

EXTERIOR 7A

ALT. INT. HORIZONTAL MAY BE
USED AT ANY HORIZONTAL LOCATION

LARGE MISSILE IMPACT RESISTANT DETAILS

REFER TO GLAZING DETAILS ON SHEET 7, 8 OF 8 FOR SPECIFIC INFORMATION REGARDING GLAZING MATERIALS AND GLASS BITE

* SPACED MAX. 9" O.C.

REV.	DATE	REQUEST LETTER	BY

EC 95502-10 ESTABLISHED 2/01/06

BALLARD L. ARGUS, P.E.
530 WEST PINE STREET
SUITE 5
PONCHATOULA, LA 70454
985-386-4599

3/10/06
FLORIDA #35686, CIVIL

THIS DRAWING IS FOR DADE COUNTY PRODUCT APPROVAL ONLY

Approved as complying with the Florida Building Code
Date 06/22/06
NOA# 06-0320.19
Miami-Dade Product Control Division
By

Kawneer
An Alcoa Company
555 GUTHRIDGE COURT
NORCROSS, GEORGIA 30092
PHONE (770) 449-5555
FAX (770) 734-1560

PRODUCT APPROVAL DRAWINGS
1600 SYSTEM1-LMI (NO STEEL)
9/16" & 1-5/16" (090 PVB)
PROTOCOLS-TAS 201/202/203
ASTM E1886/1996

SCALE:

DRAWN BY DEH
DATE 05/27/05
DRWG. NO. NOA162-100
SHEET 5 of 8
NOA162-100-005

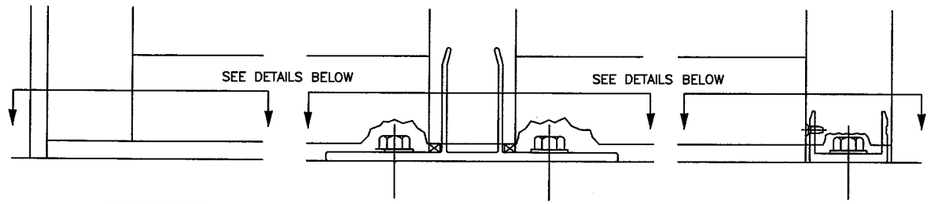

10 JAMB ANCHOR

11 MULLION ANCHOR

12 JAMB ANCHOR

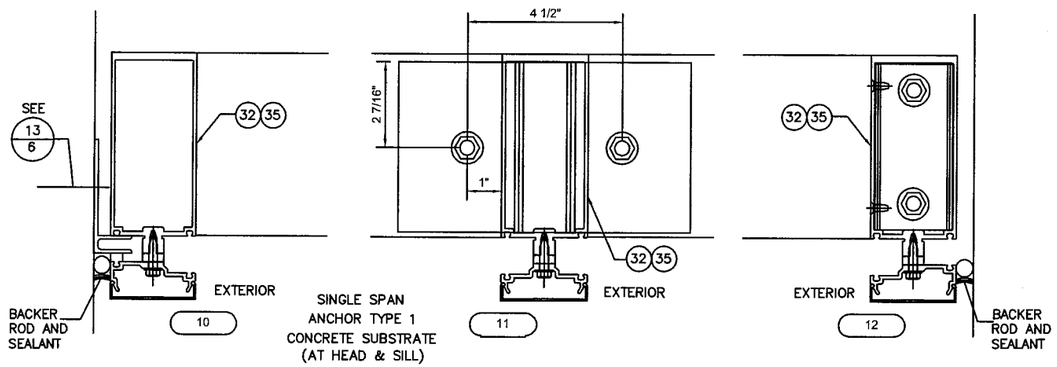

SINGLE SPAN ANCHOR TYPE 1 CONCRETE SUBSTRATE (AT HEAD & SILL)

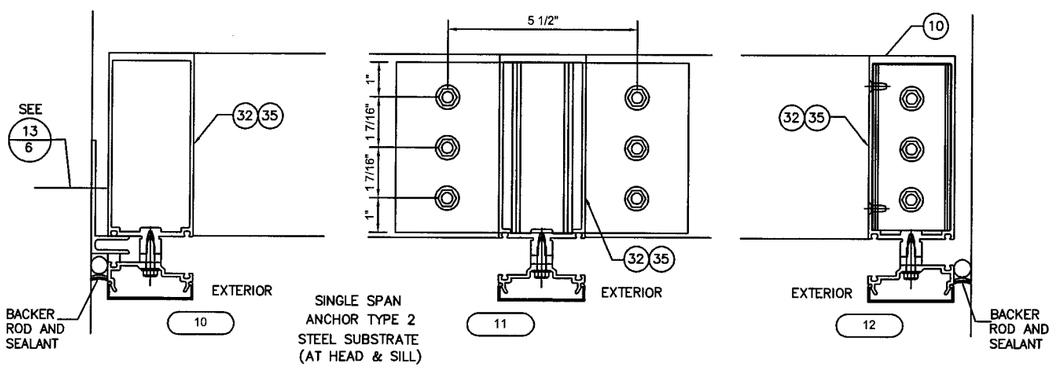

SINGLE SPAN ANCHOR TYPE 2 STEEL SUBSTRATE (AT HEAD & SILL)

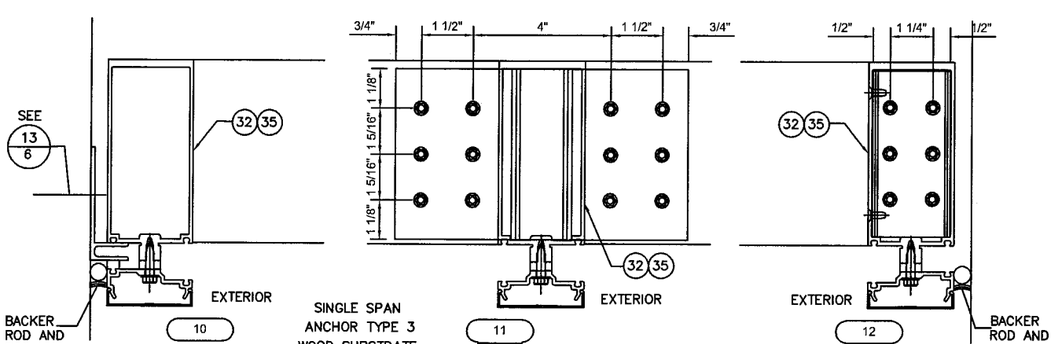

SINGLE SPAN ANCHOR TYPE 3 WOOD SUBSTRATE (AT HEAD & SILL)

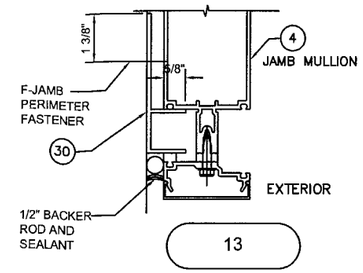

13

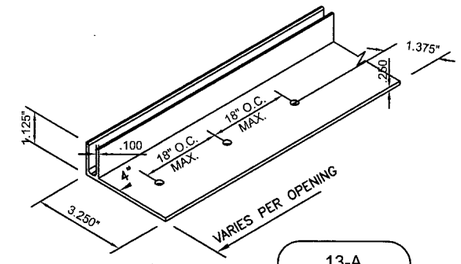

13-A

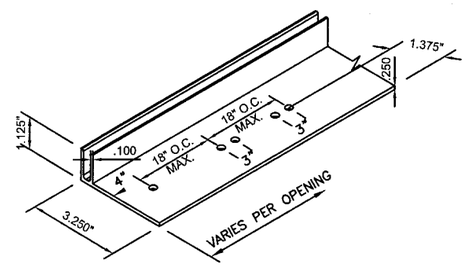

13-B

VERTICAL JAMB "F" PERIMETER FASTENER SCHEDULE

DESCRIPTION	MATERIAL	SUBSTRATE	MIN. EMBED.	TYPICAL SPACING VERTICAL JAMB	SPACING AT HORIZONTAL MULLION CENTER LINE	
1/4–20 x 1–1/2" ELCO DRILLFLEX	SAE GRADE 5 STEEL	STEEL	1/4"	1 ANCHOR @ MAX. 18" O.C. (SEE 13–A)	AT HORIZ. MULLION	2 @ MULLION (SEE 13–A)
1/4" x 2–1/4" ELCO TAPCON	–	CONCRETE/CBS	1–1/4"	1 PAIR ANCHORS @ MAX. 18" O.C. (SEE 13–B)	AT HORIZ. MULLION	3 @ 3"O.C. MIN. (SEE 13–B)
1/4" x 2–1/4" ELCO TAPCON	–	WOOD	1–1/2"	1 PAIR ANCHORS @ MAX. 18" O.C. (13–B)	AT HORIZ. MULLION	4 @ 3"O.C. MIN. (SEE 13–B)

NOTE: FASTENER SPACING NOT TO EXCEED 18" O.C.

ANCHOR SCHEDULE

ANCHOR TYPE	NUMBER	DESCRIPTION	MATERIAL	SUBSTRATE	MIN. EMBED.
1	–	1/2" X 3" POWERS WEDGE–BOLT ANCHOR	THROUGH HARDENED AISI 1020/1040 CARBON STEEL ASTM B 633, SC1, TYPE III ZINC PLATING	CONCRETE MIN. 3000 PSI	2–1/2"
2	–	1/4"–13 TEK SCREW	SAE GRADE 5 STEEL	18GA (.048) X 50KSI STEEL	1/4"
3	–	5/16" SMS 5/16" LAG BOLT	SAE GRADE 2 STEEL SAE GRADE 5 STEEL	WOOD *	3"

*BASED ON ACQ PRESSURE TREATED PINE: SMS OR LAG BOLT TO BE GALVANIZED FINISH OR OTHER PROPIETARY FINISH BY MANUFACTURE SUITABLE FOR USE INTO ACQ TREATED WOOD.

REV.	DATE	REQUEST LETTER	BY
EC 95502-10	ESTABLISHED	2/01/06	

BALLARD L. ARGUS, P.E.
530 WEST PINE STREET
SUITE 5
PONCHATOULA, LA 70454
985-386-4599

3/10/06
FLORIDA #35686, CIVIL

THIS DRAWING IS FOR DADE COUNTY PRODUCT APPROVAL ONLY

Approved as complying with the Florida Building Code
Date 06/22/06
NOA# 06-0320.19
Miami-Dade Product Control Division
By

Kawneer
An Alcoa Company
555 GUTHRIDGE COURT
NORCROSS, GEORGIA 30092
PHONE (770) 449-5555
FAX (770) 734-1560

PRODUCT APPROVAL DRAWINGS
1600 SYSTEM1 - LMI (NO STEEL)
9/16" & 1-5/16" (.090 PVB)
PROTOCOLS-TAS 201/202/203
ASTM E1886/1996

SCALE:

DRAWN BY DEH
DATE 05/27/05
DRWG. NO. NOA162–100
SHEET 6 of 8
NOA162–100–006

GLAZING DETAILS

9/16" LARGE MISSILE

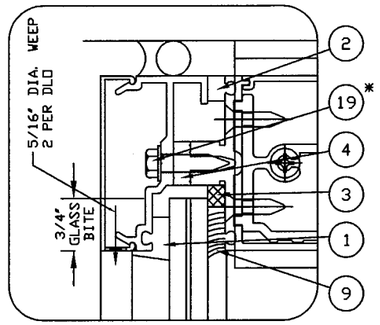

TYPICAL HEAD GLAZING DETAIL
9/16" LAMINATED GLASS

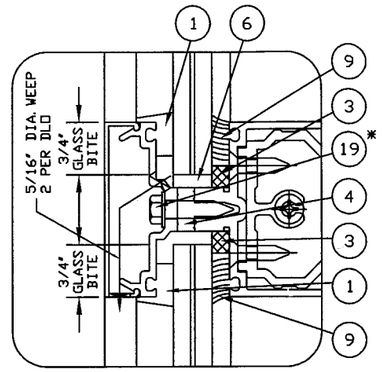

TYPICAL HORIZONTAL GLAZING DETAIL
9/16" LAMINATED GLASS

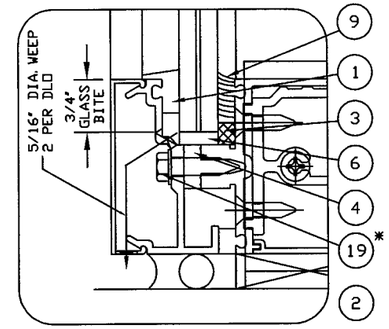

TYPICAL SILL GLAZING DETAIL
9/16" LAMINATED GLASS

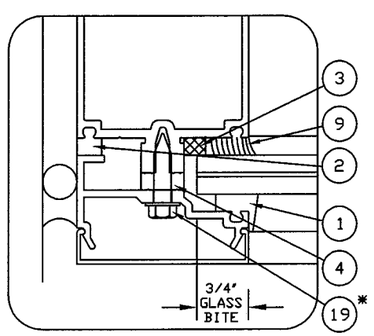

TYPICAL JAMB GLAZING DETAIL
9/16" LAMINATED GLASS

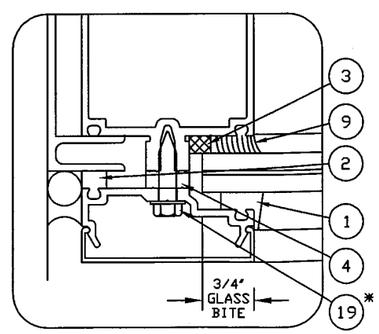

TYPICAL 'F' PERIMETER
JAMB GLAZING DETAIL
9/16" LAMINATED GLASS

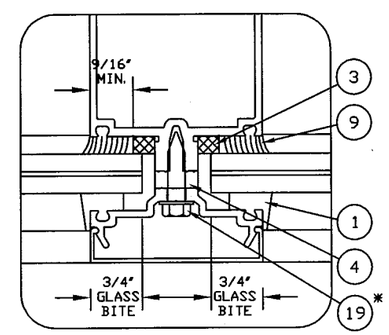

TYPICAL VERTICAL GLAZING DETAIL
9/16" LAMINATED GLASS

LARGE MISSILE IMPACT
RESISTANT DETAILS

GLASS SIZE FORMULA DLO + 1-1/2"
UNLESS OTHERWISE NOTED

* SPACED MAX. 9" O. C.

REV.	DATE	REQUEST LETTER	BY

EC 95502-10 ESTABLISHED 2/01/06

BALLARD L. ARGUS, P. E.
530 WEST PINE STREET
SUITE 5
PONCHATOULA, LA 70454
985-386-4599

3/10/06
FLORIDA #35686, CIVIL

THIS DRAWING IS FOR DADE COUNTY PRODUCT APPROVAL ONLY

Approved as complying with the Florida Building Code
Date 06/22/06
NOA# 06-0320.19
Miami-Dade Product Control Division
By

Kawneer
An Alcoa Company
555 GUTHRIDGE COURT
NORCROSS, GEORGIA 30092
PHONE (770) 449-5555
FAX (770) 734-1560

TEST UNIT DRAWINGS
1600 SYSTEM1 - LMI (NO STEEL)
9/16" & 1-5/16" (.090 PVB)
PROTOCOLS-TAS 201/202/203
ASTM E1886/1996

SCALE:

DRAWN BY: DEH
DATE: 05/27/05
DRWG. NO.: NOA162-100
SHEET: 7 of 8
NOA162-100-007

GLAZING DETAILS

1-5/16" INSULATING LARGE MISSILE

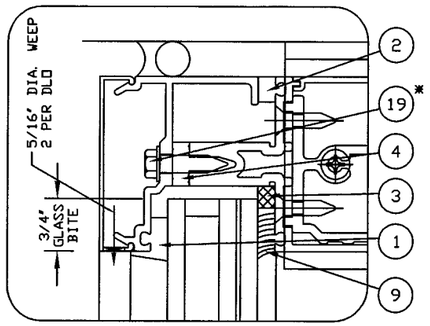

TYPICAL HEAD GLAZING DETAIL
1-5/16" LAMINATED GLASS

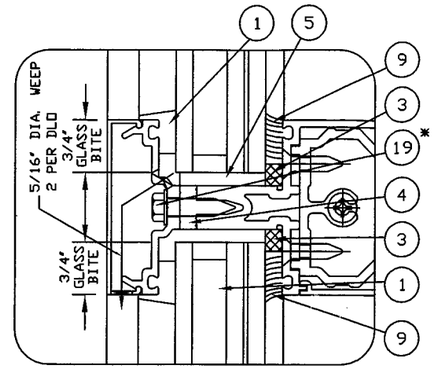

TYPICAL HORIZONTAL GLAZING DETAIL
1-5/16" LAMINATED GLASS

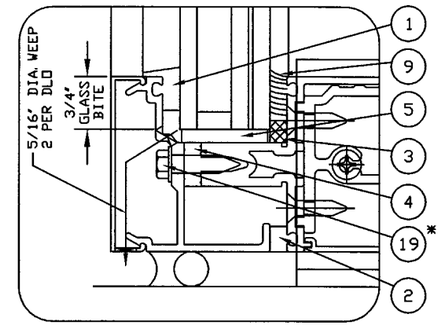

TYPICAL SILL GLAZING DETAIL
1-5/16" LAMINATED GLASS

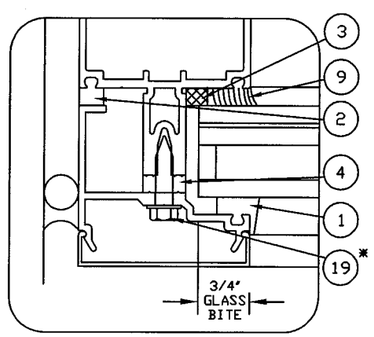

TYPICAL JAMB GLAZING DETAIL
1-5/16" LAMINATED GLASS

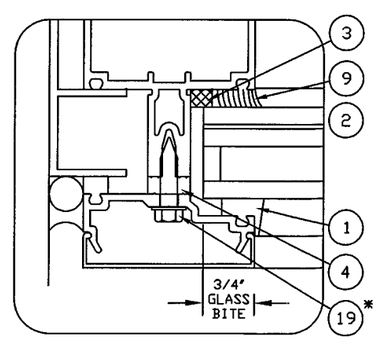

TYPICAL 'F' PERIMETER
JAMB GLAZING DETAIL
1-5/16" LAMINATED GLASS

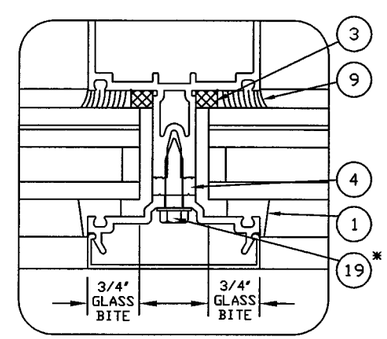

TYPICAL VERTICAL GLAZING DETAIL
1-5/16" LAMINATED GLASS

LARGE MISSILE IMPACT
RESISTANT DETAILS

GLASS SIZE FORMULA DLO + 1-1/2"
UNLESS OTHERWISE NOTED

* SPACED MAX. 9" O. C.

REV.	DATE	REQUEST LETTER	BY

EC 95502-10 ESTABLISHED 2/01/06

BALLARD L. ARGUS, P. E.
530 WEST PINE STREET
SUITE 5
PONCHATOULA, LA 70454
985-386-4599

3/10/06
FLORIDA #35686, CIVIL

THIS DRAWING IS FOR DADE COUNTY PRODUCT APPROVAL ONLY

Approved as complying with the Florida Building Code
Date 06/22/06
NOA# 06-0516.19
Miami-Dade Product Control Division
By

Kawneer
An Alcoa Company
555 GUTHRIDGE COURT
NORCROSS, GEORGIA 30092
PHONE (770) 449-5555
FAX (770) 734-1560

TEST UNIT DRAWINGS
1600 SYSTEM1 - LMI (NO STEEL)
9/16" & 1-5/16" (.090 PVB)
PROTOCOLS-TAS 201/202/203
ASTM E1886/1996

SCALE:

DRAWN BY	DATE
DEH	05/27/05

DRWG. NO. NOA162-100

SHEET 8 of 8

NOA162-100-008