MIAMI-DADE COUNTY, FLORIDA
METRO-DADE FLAGLER BUILDING

BUILDING CODE COMPLIANCE OFFICE (BCCO)
PRODUCT CONTROL DIVISION

140 WEST FLAGLER STREET, SUITE 1603
MIAMI, FLORIDA 33130-1563
(305) 375-2901 FAX (305) 375-2908
www.buildingcodeonline.com

NOTICE OF ACCEPTANCE (NOA)

American Building Company
1150 State Docks Road
Eufaula, Alabama 36027

SCOPE:
This NOA is being issued under the applicable rules and regulations governing the use of construction materials. The documentation submitted has been reviewed by Miami-Dade County Product Control Division and accepted by the Board of Rules and Appeals (BORA) to be used in Miami Dade County and other areas where allowed by the Authority Having Jurisdiction (AHJ).

This NOA shall not be valid after the expiration date stated below. The Miami-Dade County Product Control Division (In Miami Dade County) and/or the AHJ (in areas other than Miami Dade County) reserve the right to have this product or material tested for quality assurance purposes. If this product or material fails to perform in the accepted manner, the manufacturer will incur the expense of such testing and the AHJ may immediately revoke, modify, or suspend the use of such product or material within their jurisdiction. BORA reserves the right to revoke this acceptance, if it is determined by Miami-Dade County Product Control Division that this product or material fails to meet the requirements of the applicable building code.

This product is approved as described herein, and has been designed to comply with the High Velocity Hurricane Zone of the Florida Building Code.

DESCRIPTION: 0.0248" (min.) SS-360 Structural Metal Roof Panel

APPROVAL DOCUMENT: Drawing No. SS36024, titled " Standing Seam 360 Panel ", sheets 1 through 8 of 8, prepared by Jeff Walsh, P.E., last revision #1 dated May 10, 2001, signed and sealed by Jeff Walsh, P.E., on May 10, 2001, bearing the Miami-Dade County Product Control Renewal stamp with the Notice of Acceptance number and expiration date by the Miami-Dade County Product Control Division.

MISSILE IMPACT RATING: Large and Small Missile Impact

LABELING: Each panel shall bear a permanent label with the manufacturer's name or logo, city, state and the following statement: "Miami-Dade County Product Control Approved", unless otherwise noted herein.

RENEWAL of this NOA shall be considered after a renewal application has been filed and there has been no change in the applicable building code negatively affecting the performance of this product.

TERMINATION of this NOA will occur after the expiration date or if there has been a revision or change in the materials, use, and/or manufacture of the product or process. Misuse of this NOA as an endorsement of any product, for sales, advertising or any other purposes shall automatically terminate this NOA. Failure to comply with any section of this NOA shall be cause for termination and removal of NOA.

ADVERTISEMENT: The NOA number preceded by the words Miami-Dade County, Florida, and followed by the expiration date may be displayed in advertising literature. If any portion of the NOA is displayed, then it shall be done in its entirety.

INSPECTION: A copy of this entire NOA shall be provided to the user by the manufacturer or its distributors and shall be available for inspection at the job site at the request of the Building Official.

This NOA **renews NOA # 00-0929.07** and consists of this page 1, evidence submitted pages E-1 & E-2 as well as approval document mentioned above.

The submitted documentation was reviewed by **Helmy A. Makar, P.E.**

Helmy A. Makar
06/01/2006

NOA No 06-0320.22
Expiration Date: 05/31/2011
Approval Date: 06/01/2006

American Building Company

NOTICE OF ACCEPTANCE: EVIDENCE SUBMITTED

1. EVIDENCE SUBMITTED UNDER PREVIOUS APPROVAL #00-0929.07

A. DRAWINGS

1. *Drawing No. SS36024, titled "Standing Seam 360 Panel", last revision #1 dated May 10, 2001, sheets 1 through 8 of 8, prepared by Jeff Walsh, P.E., signed and sealed by Jeff Walsh, P.E. on May 10, 2001.*

B. TESTS

1. *Test report on Large Missile Impact on Standing Seam 360 Roof Panel, prepared by Hurricane Test Laboratory, Inc., Report No. 0207-0814-99, dated October 27, 1999, signed and sealed by Vinu J. Abraham, P.E.*
2. *Test report on Accelerated Weathering Testing of Coating 2000 hours per ASTM G26-96, prepared by Asphalt Technologies, dated May 1, 2000, signed and sealed by Charles L. Thomas, P.E.*
3. *Test report on Salt Spray Testing of Coating 1000 hours per ASTM B117-95, prepared by Celotex, Report No. 520534, dated April 12, 2000, signed and sealed by R. C. Miller, P.E.*
4. *Susceptibility to leakage test in accordance with Miami-Dade County Protocol PA 114 Appendix G, prepared by Celotex, Report No. 520534-1, March 30, 2000, signed and sealed by R. C. Miller, P.E.*
5. *Test report on Uplift Resistance per UL 580 Class 90 on Standing Seam 360 Roof Panel, prepared by Hurricane Test Laboratory, Inc., Report No. 0207-0112-00, dated February 7, 2000, signed and sealed by Vinu J. Abraham, P.E.*
6. *Wind Driven Rain Test per PA-100 on Standing Seam 360 Roof Panel, prepared by Celotex, Report No. 520534-6, dated May 1, 2000, signed and sealed by R. C. Miller, P.E.*

C. CALCULATIONS

1. *Calculations titled "Standing Seam 360 Roof Panel", 7 pages, dated June 17, 2000, prepared by Jeff Walsh, P.E., signed and sealed by Jeff Walsh, P.E.*
2. *Calculations titled "Standing Seam 360 Roof Panel", 7 pages, dated February 28, 2001, prepared by Jeff Walsh, P.E., signed and sealed by Jeff Walsh, P.E.*
3. *Calculations titled "Standing Seam 360 Roof Panel", 3 pages, dated April 4, 2001, prepared by Jeff Walsh, P.E., signed and sealed by Jeff Walsh, P.E.*
4. *Calculations titled "Standing Seam 360 Roof Panel", 6 pages, dated April 5, 2001, prepared by Jeff Walsh, P.E., signed and sealed by Jeff Walsh, P.E.*
5. *Calculations titled "Standing Seam 360 Roof Panel", 3 pages, dated April 24, 2001, prepared by Jeff Walsh, P.E., signed and sealed by Jeff Walsh, P.E.*

Helmy A. Makar, P.E.
Product Control Examiner
NOA No 06-0320.22
Expiration Date: 05/31/2011
Approval Date: 06/01/2006

D. MATERIAL CERTIFICATIONS

1. *Mill Certified Test Report issued by U. S. Steel Group, dated 12/29/99, with chemical composition and mechanical properties of galvalume steel.*
2. *Tensile Test on specimen #1 & #5 of Test No. 0207-0814-99, Report No. 9HM-1896, prepared by QC Metallurgical, Inc., dated August 31, 1999, signed and sealed by Frank Grate, P.E.*
3. *Tensile Test on specimen 1-A & 2-A of Test No. 0207-0112-00, Report No. 0BM-290, prepared by QC Metallurgical, Inc., dated March 24, 2000, signed and sealed by Frank Grate, P.E.*

2. NEW EVIDENCE SUBMITTED

A. DRAWINGS

1. *None.*

B. TESTS

1. *None.*

C. CALCULATIONS

1. *None.*

D. QUALITY ASSURANCE

1. *By Miami-Dade County Building Code Compliance Office.*

E. MATERIAL CERTIFICATIONS

1. *None.*

Helmy A. Makar, P.E.
Product Control Examiner
NOA No 06-0320.22
Expiration Date: 05/31/2011
Approval Date: 06/01/2006

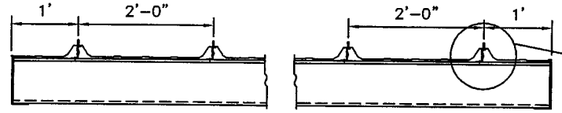

SECTION "A-A"

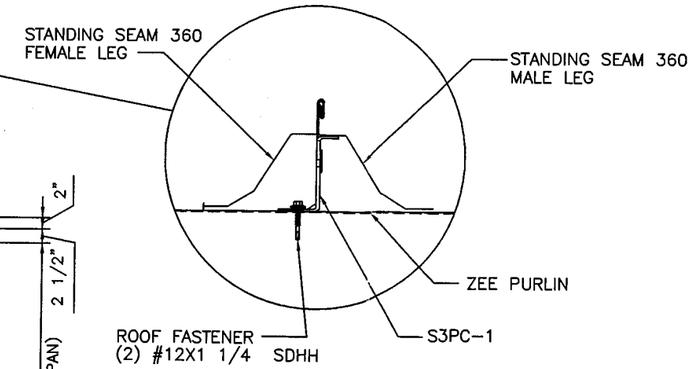

THE MAXIMUM PANEL SPAN AND THE MAXIMUM ALLOWABLE DESIGN UP-LIFT (NEGATIVE) PRESSURE OF THIS ROOF PANEL SHALL BE BASED ON THE FOLLOWING PANEL'S ALLOWABLES:

* MAXIMUM ALLOWABLE BENDING MOMENT OF PANEL AT SUPPORTS = 58.10 FT-LB
* MAXIMUM ALLOWABLE BENDING MOMENT OF PANEL BETWEEN SUPPORTS = 33.90 FT-LB
* MAXIMUM PANEL REACTION @ SUPPORT = 180.40 LBS.
* MAXIMUM ALLOWABLE DEFLECTION OF PANEL = L/240
* PANEL'S EI VALUE = 769,514.0 LBS.-IN^2

NOTES

* THIS ROOF PANEL IS APPROVED FOR UP-LIFT (NEGATIVE) PRESSURE ONLY.
* THIS ROOF PANEL IS APPROVED FOR SPANS OF UP TO 5'-0" MAXIMUM.

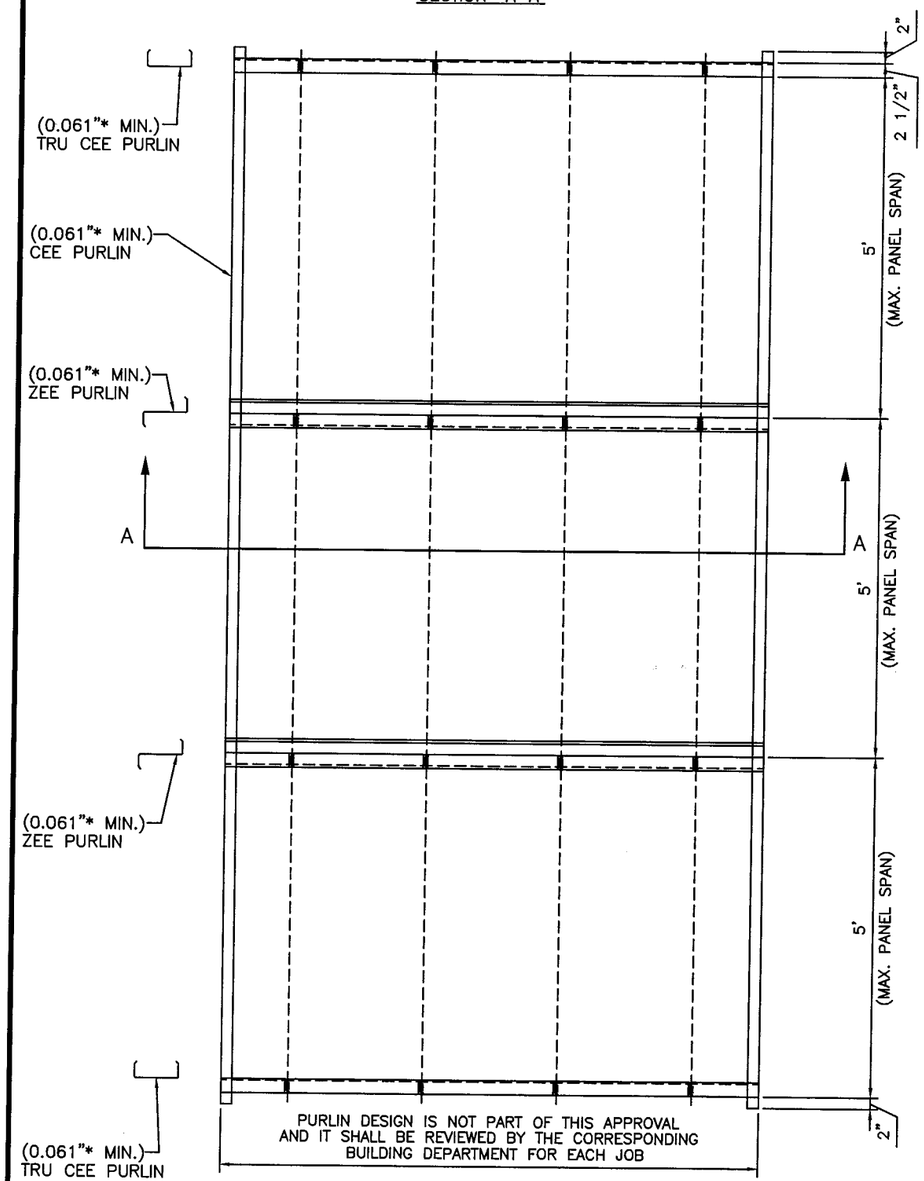

PURLIN DESIGN IS NOT PART OF THIS APPROVAL AND IT SHALL BE REVIEWED BY THE CORRESPONDING BUILDING DEPARTMENT FOR EACH JOB

* THICKNESS SHOWN IS THE "TOTAL" THICKNESS WHICH CONSISTS OF THE BASE METAL THICKNESS AND THE COATING THICKNESS

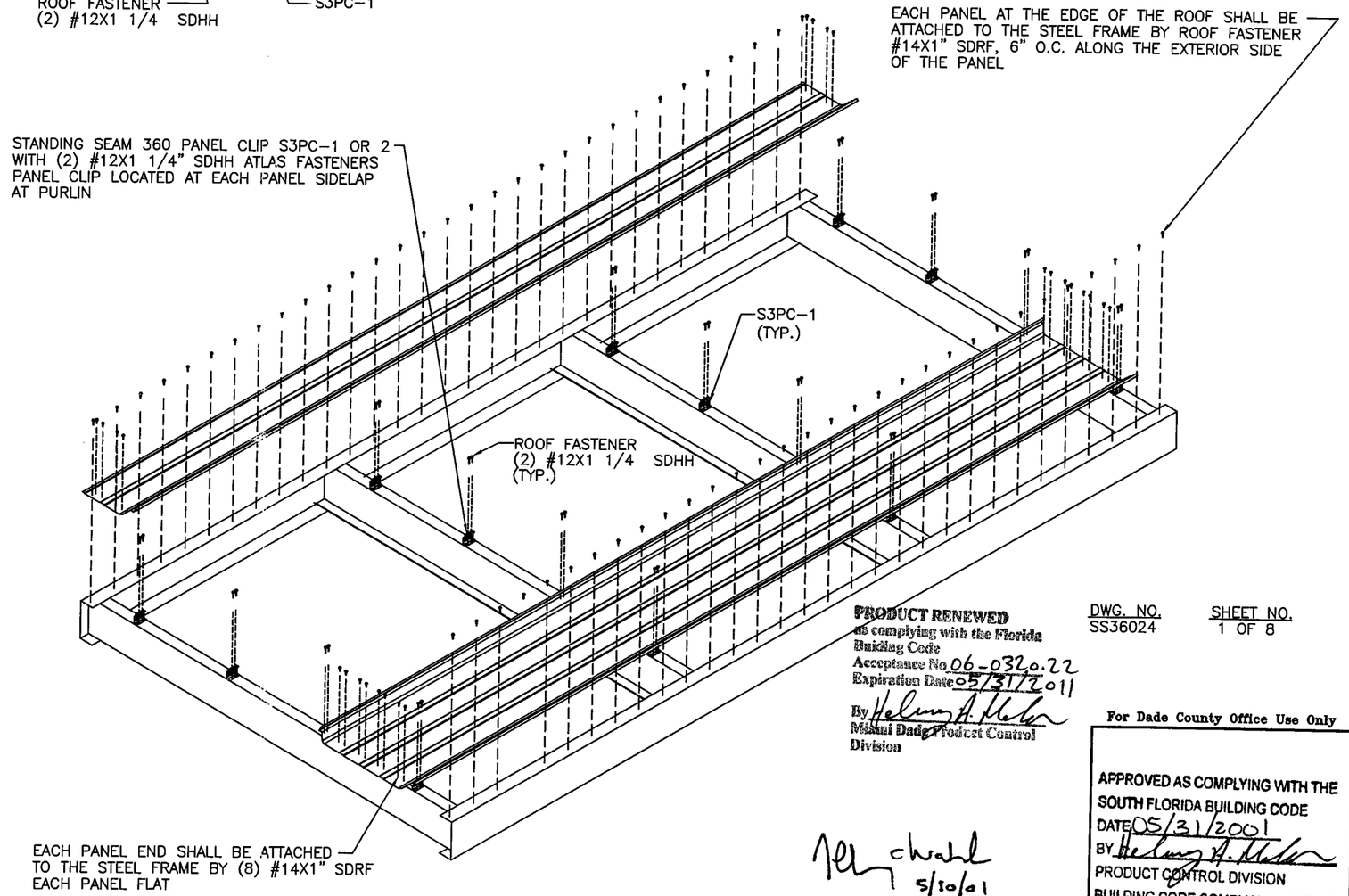

PRODUCT RENEWED as complying with the Florida Building Code
Acceptance No 06-0320.22
Expiration Date 05/31/2011
By [signature]
Miami Dade Product Control Division

DWG. NO. SS36024

SHEET NO. 1 OF 8

For Dade County Office Use Only

APPROVED AS COMPLYING WITH THE SOUTH FLORIDA BUILDING CODE
DATE 05/31/2001
BY [signature]
PRODUCT CONTROL DIVISION
BUILDING CODE COMPLIANCE OFFICE
ACCEPTANCE NO 00-0929.07

[signature] 5/30/01

NOTE:
PANEL CLIP SHALL BE ATTACHED TO STRUCTURAL STEEL FRAMING MEMBERS WITH 0.061" MINIMUM TOTAL THICKNESS, 55 KSI MINIMUM STRENGTH

NO.	REVISION	MADE	CK'D.	DATE
1	GENERAL REVISIONS	TAC	[signature]	5-10-01

ENGINEER'S NAME:	SCALE: NOT TO SCALE	DATE
	DRAWN BY: M.C.S.	9-10-99
ENGINEER'S STATE REGISTRATION NUMBER:	CHECKED BY: D.H.	9-10-99
	DESIGN APP'D BY:	
	ISSUED DATE:	

American Buildings Company
State Docks Road, P.O. Box 800
Eufaula, AL 36027-0800

DRAWING NUMBER: DCTS-SS360

REVISION NUMBER 1

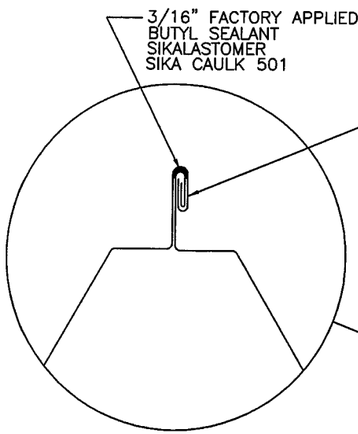

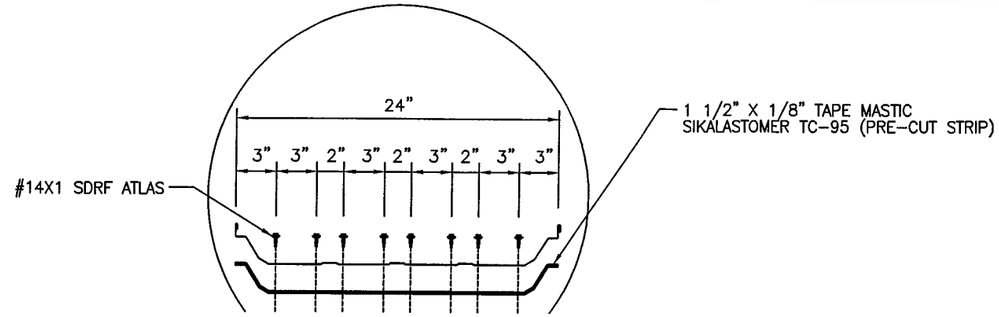

Standard Panel End Splice

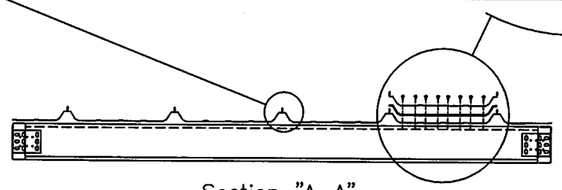

Section "A-A"

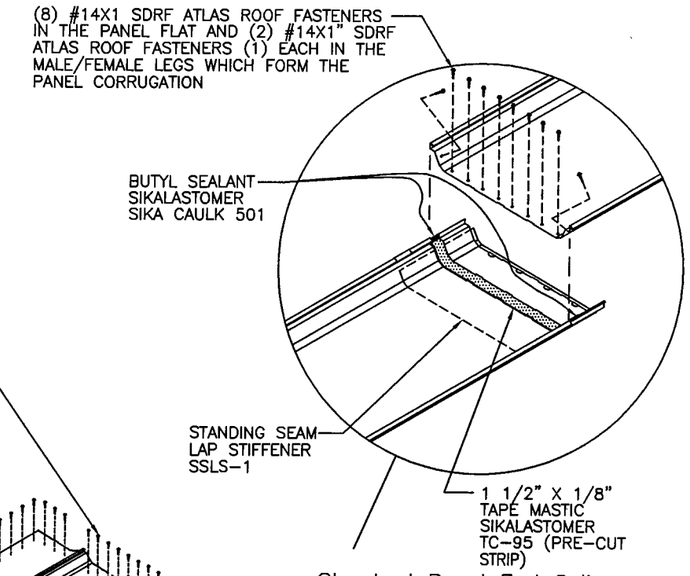

Standard Panel End Splice

LOCATED ON TOP OR IN BETWEEN PURLINS

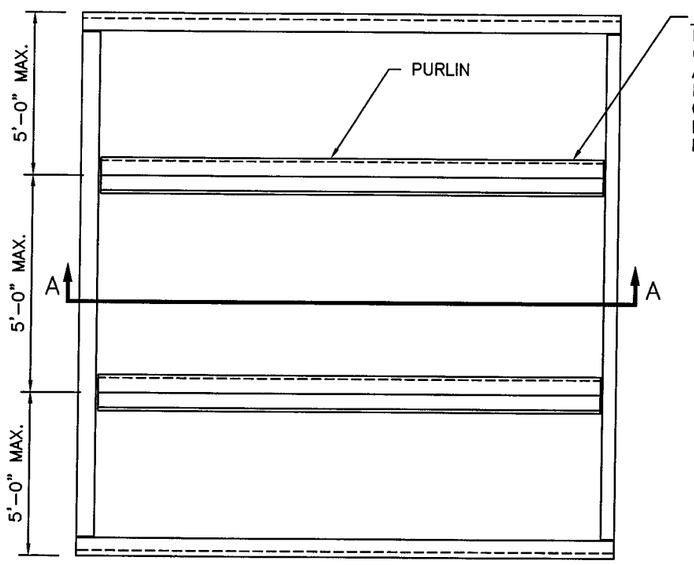

PURLIN
ITS DESIGN IS NOT PART OF THIS APPROVAL AND IT SHALL BE REVIEWED BY THE CORRESPONDING BUILDING DEPARTMENT FOR EACH JOB.

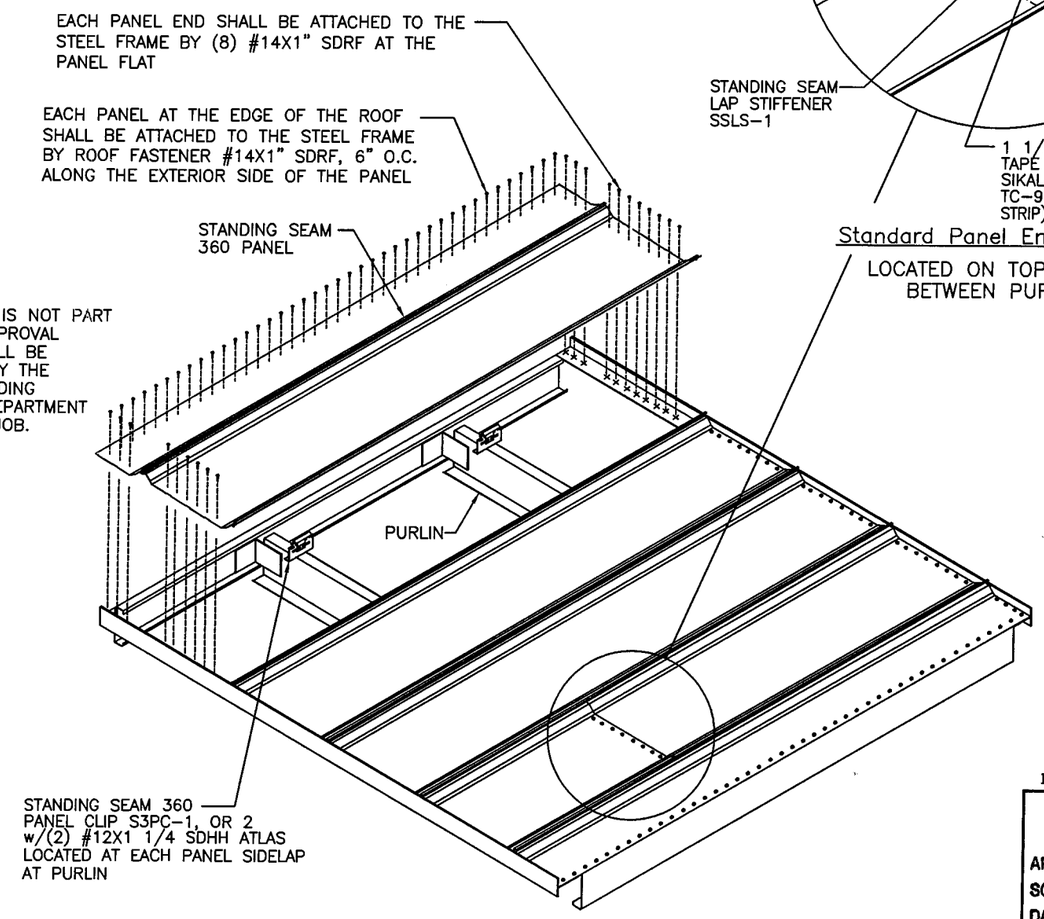

MINOR RIBS NOT SHOWN FOR CLARITY

PRODUCT	MANUFACTURER
#12X1 1/4 SDRF	ATLAS BOLT & SCREW
#12X1 1/4 SDHH	ATLAS BOLT & SCREW
#14X1 SDRF	ATLAS BOLT & SCREW
#12X1 1/2 SDRFT5	ATLAS BOLT & SCREW
1 1/2X1/8 TAPE MASTIC	SIKA CORP.
3/16" BUTYL SEALANT	SIKA CORP.

PRODUCT RENEWED
as complying with the Florida Building Code
Acceptance No. 06-0320.22
Expiration Date 05/31/2011
By Helena A. Molina
Miami Dade District Control Division

DWG. NO. SS36024

SHEET NO. 2 OF 8

For Dade County Office Use Only

APPROVED AS COMPLYING WITH THE SOUTH FLORIDA BUILDING CODE
DATE 05/31/2001
BY Helena A. Molina
PRODUCT CONTROL DIVISION
BUILDING CODE COMPLIANCE OFFICE
ACCEPTANCE NO. 00-0929.07

5/10/01

NO.	REVISION	MADE	CK'D.	DATE
1	GENERAL REVISIONS	TAC		5-10-01

ENGINEER'S NAME:	SCALE: NOT TO SCALE	DATE
	DRAWN BY: T.A.C.	3-14-00
ENGINEER'S STATE REGISTRATION NUMBER:	CHECKED BY: D.H.	3-14-00
	DESIGN APP'D. BY:	
	ISSUED DATE:	3-14-00

American Buildings Company
State Docks Road, P.O. Box 800
Eufaula, AL 36027-0800

DRAWING NUMBER: DCTS-3S24

REVISION NUMBER 1

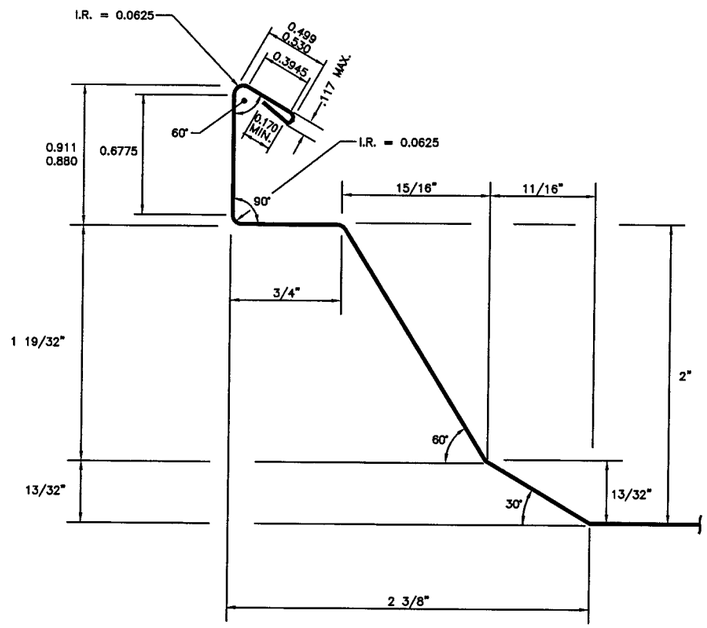

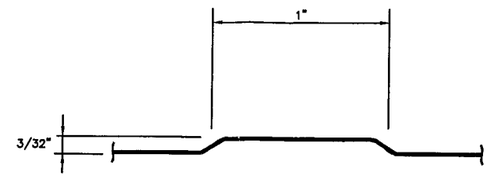

MINOR RIB DETAIL
ALL RADII = 3/32"

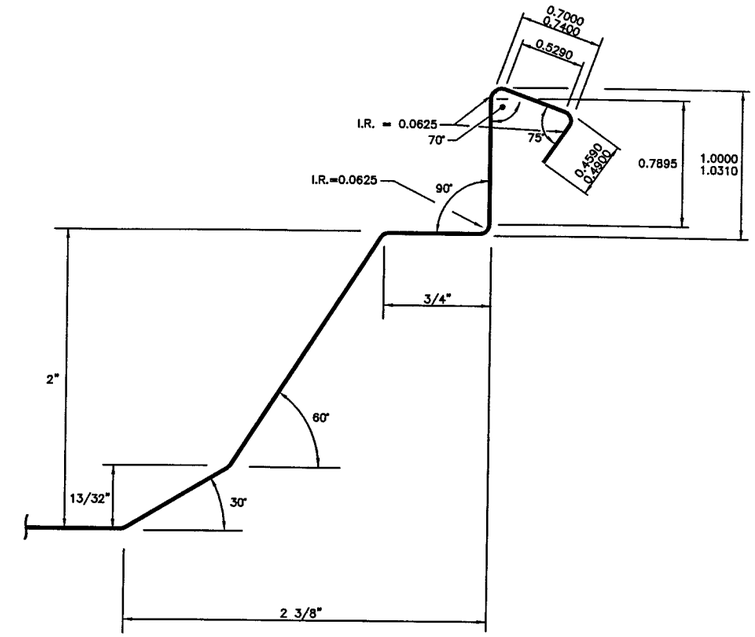

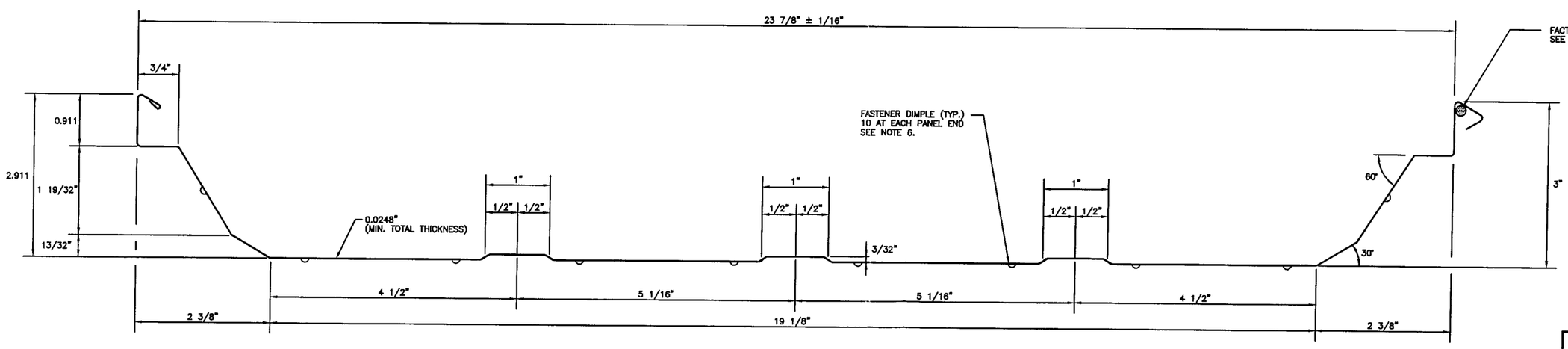

PRODUCT RENEWED
as complying with the Florida Building Code
Acceptance No. 06-0320.22
Expiration Date 05/31/2011
By Helmy A. Moker
Miami Dade Product Control Division

DWG. NO.	SHEET NO.
SS36024	3 OF 8

For Dade County Office Use Only

APPROVED AS COMPLYING WITH THE SOUTH FLORIDA BUILDING CODE
DATE 05/31/2001
BY Helmy A. Moker
PRODUCT CONTROL DIVISION
BUILDING CODE COMPLIANCE OFFICE
ACCEPTANCE NO. 00-0929.07

GENERAL NOTES:

1. ALL DIMENSIONS ARE ±1/32" (U.N.) EXCEPT TOLERANCE DIMENSIONS.
2. ALL ANGLES ± 2° (U.N.)
3. COIL WIDTH = 29 3/8".
4. PANEL LENGTHS = SEE MFG. SECTION OF MASTER PARTS LISTING.
5. MATERIAL WITH 0.0248" MIN. TOTAL THICKNESS W/ GALVANIZED COATING MINIMUM YIELD 50 KSI GALVALUME ASTM A792-97 GR 50B COATED WITH AZ55
6. DIMPLES SHALL BE LOCATED 3/4" FROM BOTH PANEL ENDS. SEE SHEET S3L/R IN MFG. SECTION.
7. MASTIC SHALL BEGIN AND END A MAXIMUM OF 2" FROM BOTH PANEL ENDS, 3/16" MIN., 1/4" MAX.

5/10/01

NO.	REVISION	MADE	CK'D.	DATE
1	GENERAL REVISIONS	TAC		5-10-01

ENGINEER'S NAME:	SCALE: NOT TO SCALE	DATE
	DRAWN BY: YML	2-17-00
ENGINEER'S STATE REGISTRATION NUMBER:	CHECKED BY: DH	2-17-00
	DESIGN APP'D. BY:	
	ISSUED DATE:	2-17-00

STANDING SEAM 360 PANEL
CROSS SECTION
S3P24-LENGTH

American Buildings Company
State Docks Road, P.O. Box 800
Eufaula, AL 36027-0800

DRAWING NUMBER: S3P24

REVISION NUMBER 1

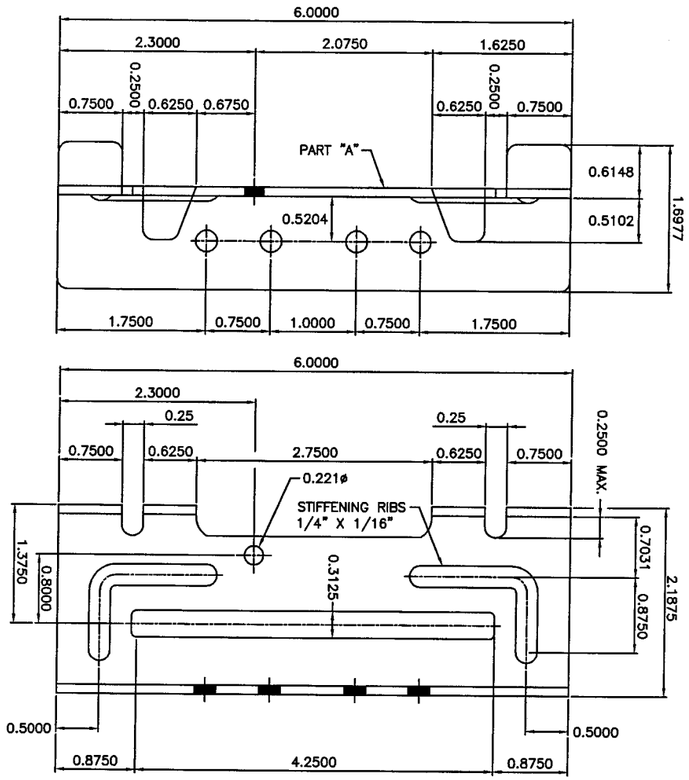

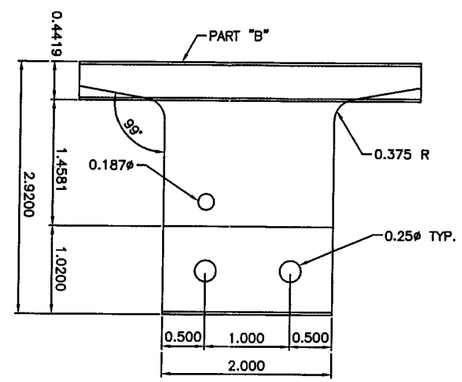

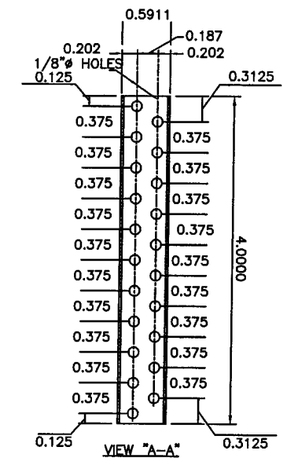

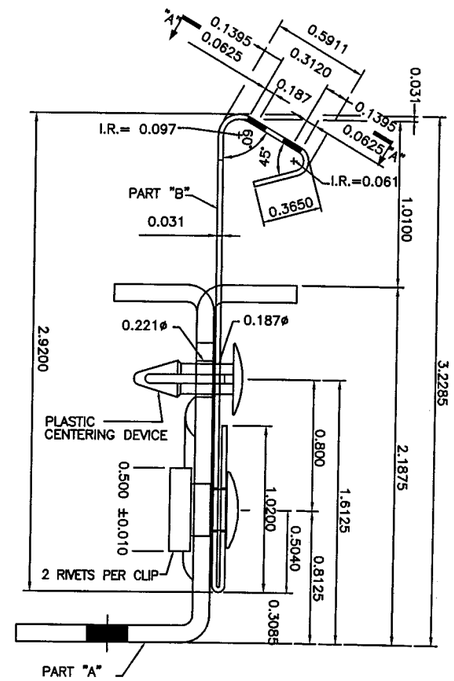

MATERIAL: PART "A"
0.104" MIN.
GALVANIZED STEEL
ASTM A446 GRADE D 50 KSI MIN.

MATERIAL: PART "B"
AZ55 ALUMINUM-ZINC ALLOY COATED
OR ALUMINIZED TYPE 2
THICKNESS= 0.031" (MIN.)
48 KSI MINIMUM

STANDING SEAM 360 PANEL CLIP
[CLIPS SHALL BE ATTACHED TO THE STRUCTURAL STEEL PURLINS (55 KSI MIN. YIELD AND WITH 0.061" MIN. TOTAL THICKNESS) USING TWO #12X1 1/4" ULTRA-Z ROOF FASTENER PER EACH CLIP] FASTENERS SHALL BE THROUGH THE INNER TWO HOLES OR THE OUTER TWO HOLES.

PRODUCT RENEWED
as complying with the Florida
Building Code
Acceptance No. 06-0320.22
Expiration Date 05/31/2011
By Helmy A. Melo
Miami Dade Product Control
Division

DWG. NO. SS36024
SHEET NO. 4 OF 8

For Dade County Office Use Only

APPROVED AS COMPLYING WITH THE
SOUTH FLORIDA BUILDING CODE
DATE 05/31/2001
BY Helmy A. Melo
PRODUCT CONTROL DIVISION
BUILDING CODE COMPLIANCE OFFICE
ACCEPTANCE NO. 00-0929.07

5/10/01

NO.	REVISION	MADE	CK'D.	DATE
1	GENERAL REVISIONS	TAC		5-10-01

ENGINEER'S NAME:	SCALE: NOT TO SCALE	DATE
	DRAWN BY: T.A.C.	3-2-00
ENGINEER'S STATE REGISTRATION NUMBER:	CHECKED BY:	3-2-00
	DESIGN APP'D. BY:	
	ISSUED DATE:	3-2-00

American Buildings Company
State Docks Road, P.O. Box 800
Eufaula, AL 36027-0800

DRAWING NUMBER: S3PC-1
REVISION NUMBER 1

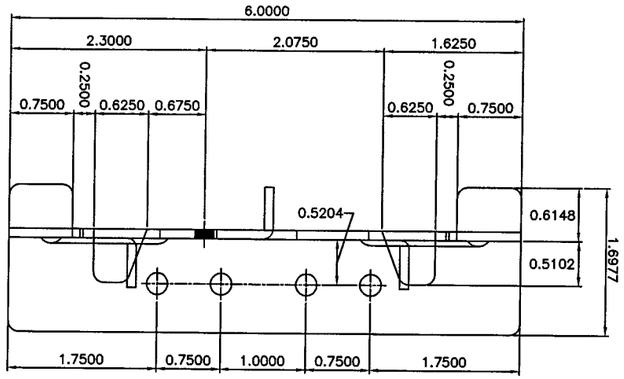

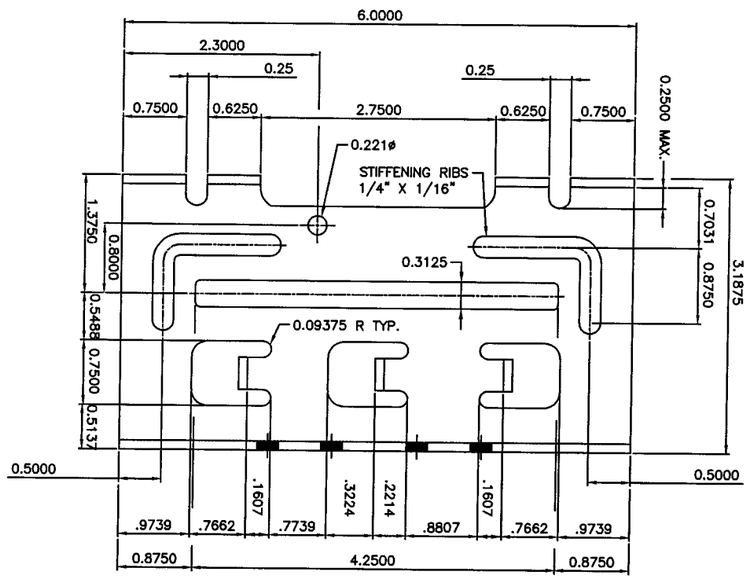

MATERIAL: PART "A"
TOTAL THICKNESS = 0.104" (MIN)
GALVANIZED STEEL
ASTM A446 GRADE D 50 KSI MIN.

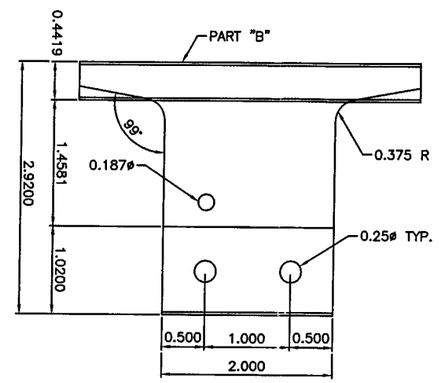

MATERIAL: PART "B"
AZ55 ALUMINUM-ZINC ALLOY COATED
OR ALUMINIZED TYPE 2
THICKNESS= 0.031" (MIN.)
48 KSI MINIMUM

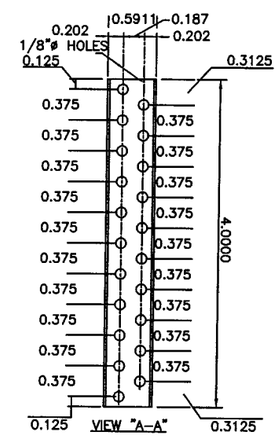

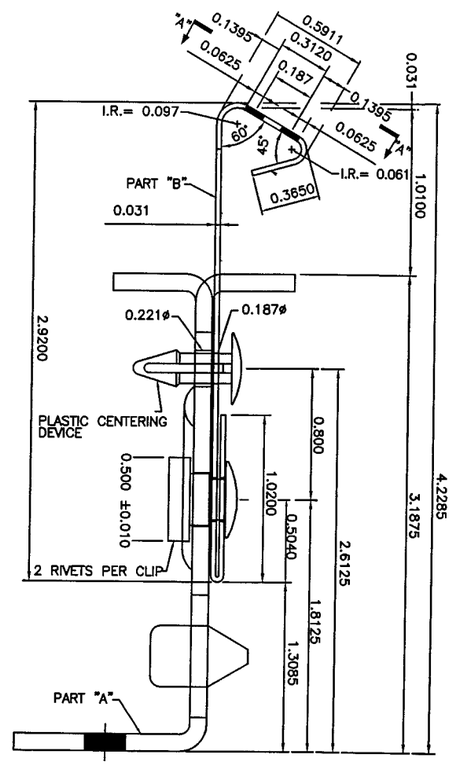

STANDING SEAM 360 PANEL CLIP
[CLIPS SHALL BE ATTACHED TO THE STRUCTURAL STEEL PURLINS (55 KSI MIN. YIELD AND WITH 0.061" MIN. TOTAL THICKNESS) USING TWO #12X1 1/4" ULTRA-Z ROOF FASTENER PER EACH CLIP]
FASTENERS SHALL BE THROUGH THE INNER TWO HOLES OR THE OUTER TWO HOLES.

PRODUCT RENEWED
as complying with the Florida
Building Code
Acceptance No. 06-0320.22
Expiration Date 05/31/2011
By Helmy A. Maher
Miami Dade Product Control
Division

DWG. NO. SS36024

SHEET NO. 5 OF 8

For Dade County Office Use Only

APPROVED AS COMPLYING WITH THE
SOUTH FLORIDA BUILDING CODE
DATE 05/31/2001
BY Helmy A. Maher
PRODUCT CONTROL DIVISION
BUILDING CODE COMPLIANCE OFFICE
ACCEPTANCE NO. 00-0929.07

C Wahl
5/10/01

NO.	REVISION	MADE	CK'D.	DATE
1	GENERAL REVISIONS	TAC	CWJ	5-10-01

ENGINEER'S NAME:	SCALE: NOT TO SCALE		DATE
	DRAWN BY:	T.A.C.	3-2-00
ENGINEER'S STATE REGISTRATION NUMBER:	CHECKED BY:		3-2-00
	DESIGN APP'D. BY:		
	ISSUED DATE:		3-2-00

American Buildings Company
State Docks Road, P.O. Box 800
Eufaula, AL 36027-0800

DRAWING NUMBER: S3PC-2

REVISION NUMBER 1

PRODUCT	MANUFACTURER
#12X1 1/4 SDHH	ATLAS BOLT & SCREW
#14X1 SDRF	ATLAS BOLT & SCREW
BUTYL SEALANT	SIKA CORP.
2"X3/16" TAPE MASTIC	SIKA CORP.

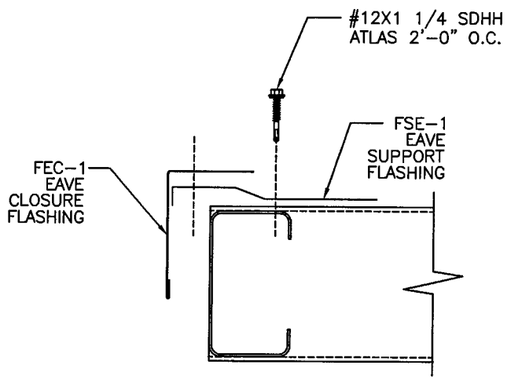

SECTION "A-A"

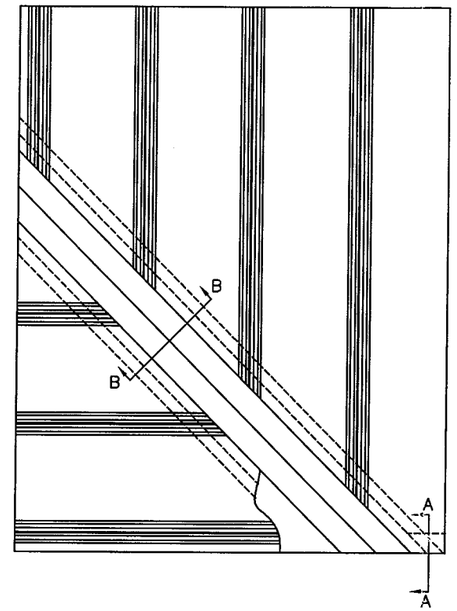

VALLEY DETAILS

MINOR RIBS OMITTED FOR CLARITY

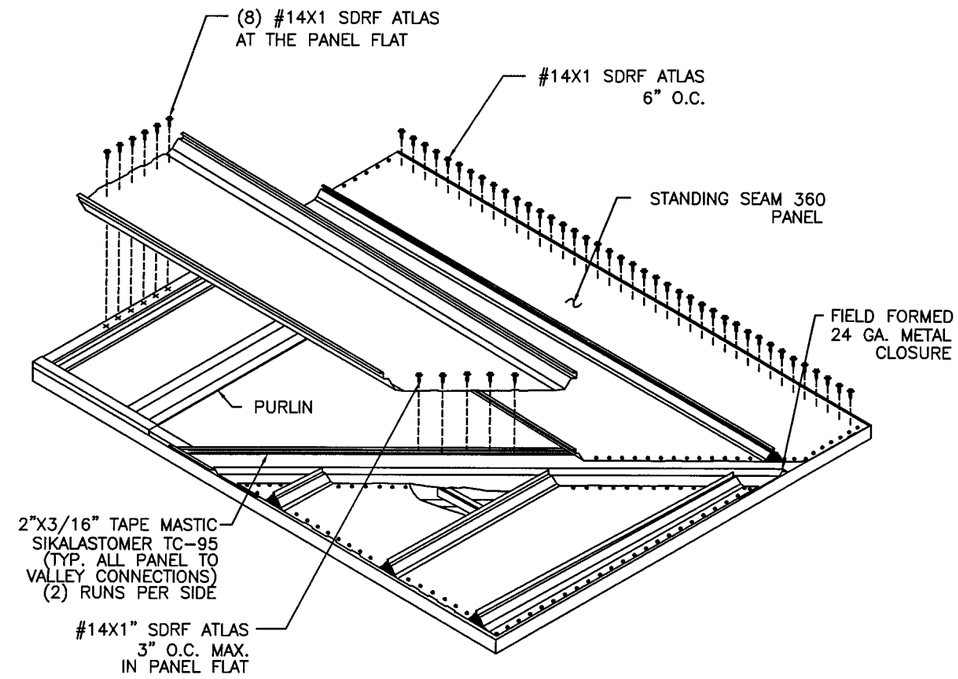

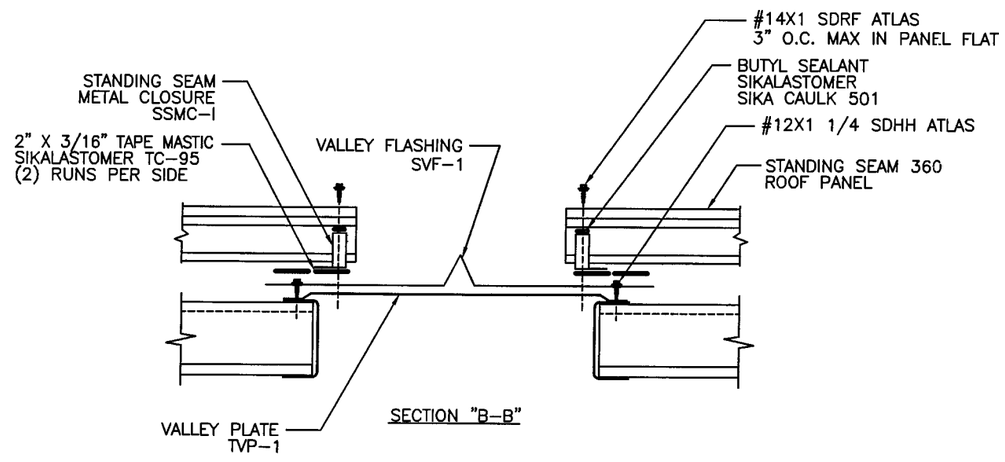

SECTION "B-B"

PRODUCT RENEWED
as complying with the Florida
Building Code
Acceptance No 06-0320.22
Expiration Date 05/31/2011
By Helmy A. Mahr
Miami Dade Product Control
Division

DWG. NO.	SHEET NO.
SS36024	6 OF 8

For Dade County Office Use Only

APPROVED AS COMPLYING WITH THE
SOUTH FLORIDA BUILDING CODE
DATE 05/31/2001
BY Helmy A. Mahr
PRODUCT CONTROL DIVISION
BUILDING CODE COMPLIANCE OFFICE
ACCEPTANCE NO. 00-0929-07

5/10/01

NOTE:
MINIMUM ROOF SLOPE = 1/4 ON 12

NO.	REVISION	MADE	CK'D.	DATE
1	GENERAL REVISIONS	TAC		5-10-01

ENGINEER'S NAME:	SCALE: NOT TO SCALE	DATE
	DRAWN BY: YML	3-30-00
ENGINEER'S STATE REGISTRATION NUMBER:	CHECKED BY: DH	3-30-00
	DESIGN APP'D. BY:	
	ISSUED DATE:	3-30-00

American Buildings Company
State Docks Road, P.O. Box 800
Eufaula, AL 36027-0800

DRAWING NUMBER: DCTS-4S

REVISION NUMBER 1

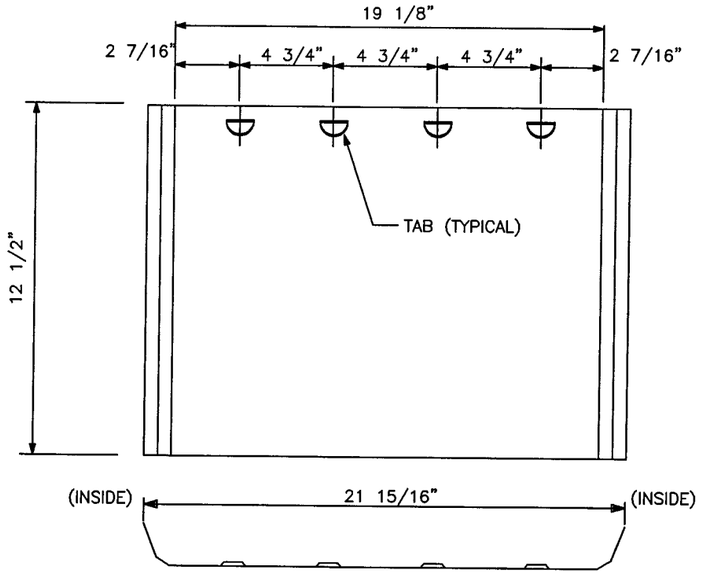

STOCK= 12 1/2" X 0.061" (MIN. TOTAL THICKNESS) X 23 5/8" (50 KSI MIN)
SLOTS= 9/16" X 1"
HOLES= 9/16"ø
COLOR= PREPAINTED WITH RED OXIDE POLYESTER PAINT

WGT. = 5#

STEEL SPEC. = ASTM A570-88, GRADE 55

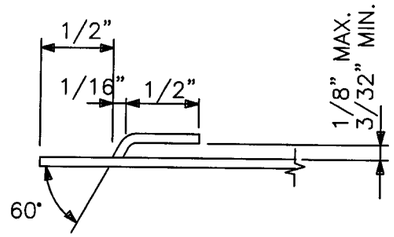

SECTION "A"-"A"

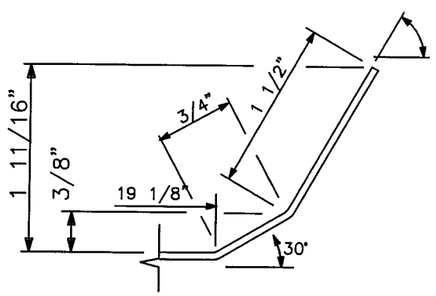

RIB DETAIL

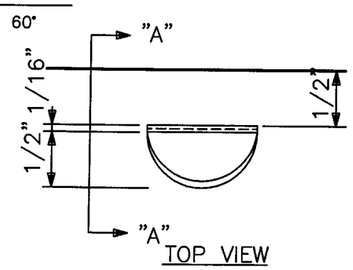

TOP VIEW

TAB DETAILS

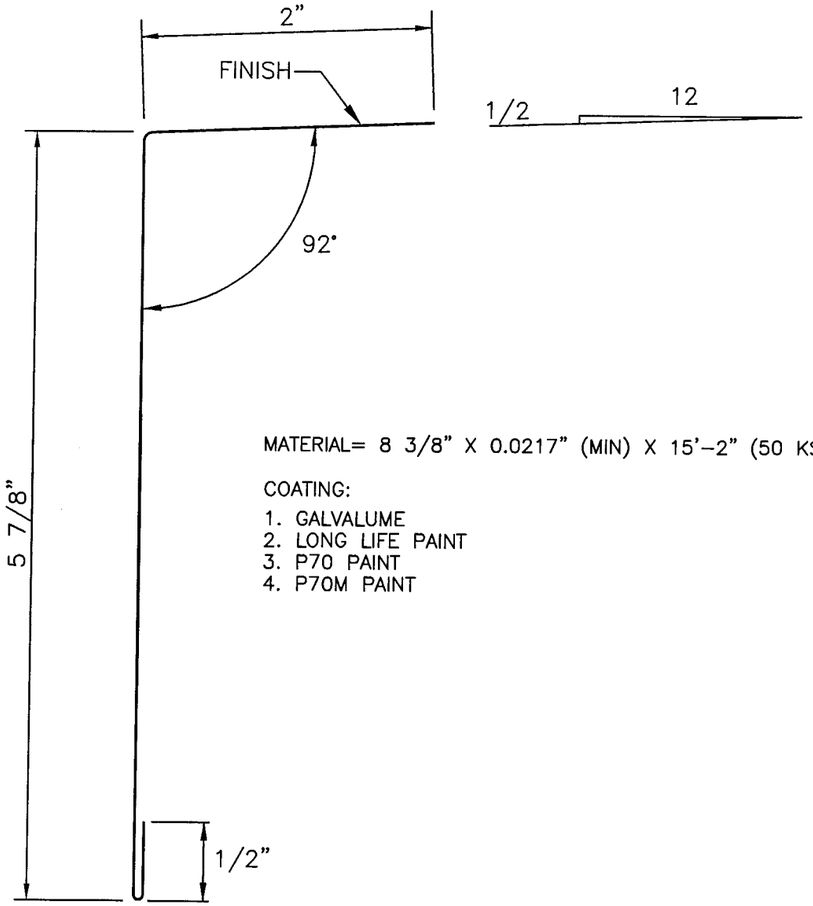

MATERIAL= 8 3/8" X 0.0217" (MIN) X 15'-2" (50 KSI MIN)

COATING:
1. GALVALUME
2. LONG LIFE PAINT
3. P70 PAINT
4. P70M PAINT

EAVE CLOSURE FLASHING
FEC-1

DWG. NO. SS36024

SHEET NO. 7 OF 8

PRODUCT RENEWED
as complying with the Florida Building Code
Acceptance No. 06-0320.22
Expiration Date 05/31/2011
By [signature]
Miami Dade Product Control Division

For Dade County Office Use Only

APPROVED AS COMPLYING WITH THE SOUTH FLORIDA BUILDING CODE
DATE 05/31/2001
BY [signature]
PRODUCT CONTROL DIVISION
BUILDING CODE COMPLIANCE OFFICE
ACCEPTANCE NO. 00-0929.07

[signature] 5/10/01

NO.	REVISION	MADE	CK'D.	DATE
1	GENERAL REVISIONS	TAC	[signature]	5-10-01

ENGINEER'S NAME:	SCALE: NOT TO SCALE		DATE
	DRAWN BY:	T.A.C.	3-2-00
ENGINEER'S STATE REGISTRATION NUMBER:	CHECKED BY:		3-2-00
	DESIGN APP'D. BY:		
	ISSUED DATE:		3-2-00

STANDING SEAM
LAP STIFFENER
& EAVE CLOSURE FLASHING

American Buildings Company
State Docks Road, P.O. Box 800
Eufaula, AL 36027-0800

DRAWING NUMBER: MP-1

REVISION NUMBER 1

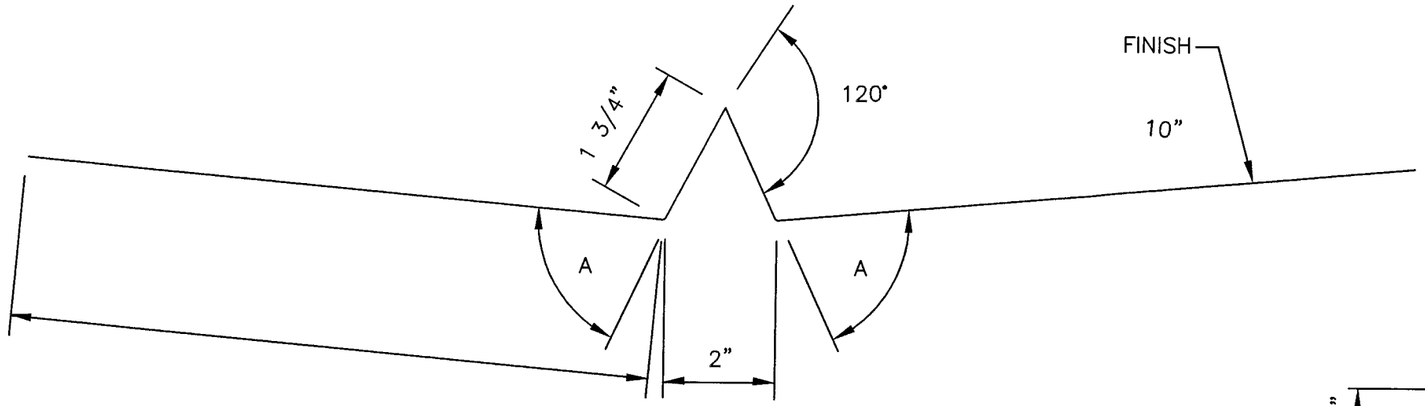

MATERIAL:
23 1/2" STOCK X 0.0217 (MIN.)

MARK NO	A
SVF-1	63°

VALLEY FLASHING
SVF-1

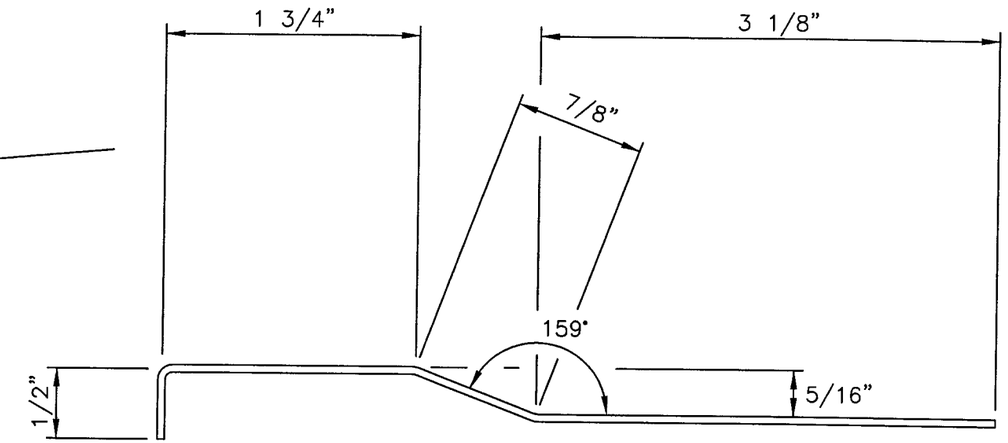

MATERIAL= 6 1/4" X 0.0516" X 15'-2" (CQ min.)
COLOR= ALCT

FLASHING EAVE SUPPORT
FSE-1

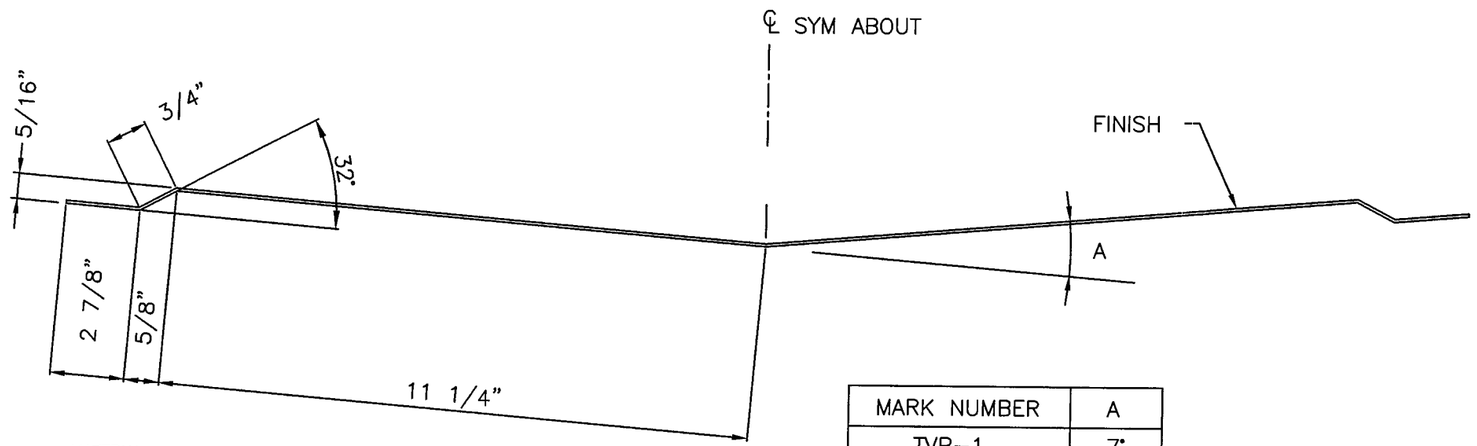

MATERIAL:
30" STOCK X 0.0516" (MIN.)

MARK NUMBER	A
TVP-1	7°

VALLEY PLATE
TVP-1

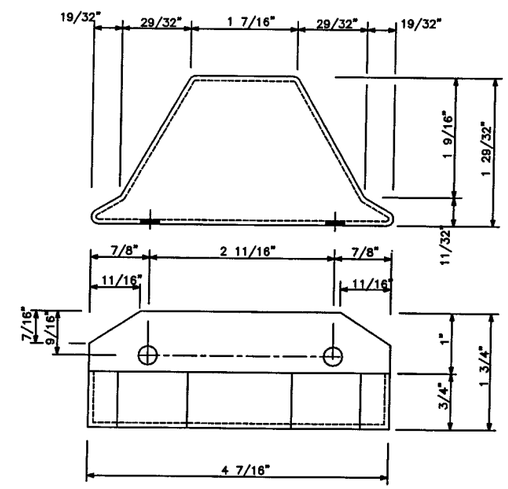

WGT. = .187#

STOCK= 5 1/2" X 0.0396" (MIN.) X 4 1/2" (50 KSI ALCT)
COLOR = SEE TALLY
ALL HOLES 1/4" ø

STANDING SEAM METAL CLOSURE
SSMC-1

PRODUCT RENEWED
as complying with the Florida Building Code
Acceptance No. 06-0320.22
Expiration Date 05/31/2011
By [signature]
Miami Dade Product Control Division

DWG. NO. SS36024
SHEET NO. 8 OF 8

For Dade County Office Use Only

APPROVED AS COMPLYING WITH THE SOUTH FLORIDA BUILDING CODE
DATE 05/31/2001
BY [signature]
PRODUCT CONTROL DIVISION
BUILDING CODE COMPLIANCE OFFICE
ACCEPTANCE NO. 00-0929.07

[signature] 5/10/01

NO.	REVISION	MADE	CK'D.	DATE
1	GENERAL REVISIONS	TAC	[signature]	5-10-01

ENGINEER'S NAME:
ENGINEER'S STATE REGISTRATION NUMBER:

SCALE: NOT TO SCALE	DATE
DRAWN BY: T.A.C.	3-2-00
CHECKED BY:	3-2-00
DESIGN APP'D. BY:	
ISSUED DATE:	3-2-00

VALLEY FLASHING, VALLEY PLATE, FLASHING EAVE SUPPORT, STANDING SEAM METAL CLOSURE

American Buildings Company
State Docks Road, P.O. Box 800
Eufaula, AL 36027-0800

DRAWING NUMBER: MP-2
REVISION NUMBER 1