MIAMI-DADE COUNTY
BUILDING CODE COMPLIANCE OFFICE (BCCO)
PRODUCT CONTROL DIVISION

MIAMI-DADE COUNTY, FLORIDA
METRO-DADE FLAGLER BUILDING

140 WEST FLAGLER STREET, SUITE 1603
MIAMI, FLORIDA 33130-1563
(305) 375-2901 FAX (305) 375-2908
www.buildingcodeonline.com

NOTICE OF ACCEPTANCE (NOA)

American Buildings Company
1150 State Docks Road
P.O.Box 800
Eufaula, AL. 36027

SCOPE:
This NOA is being issued under the applicable rules and regulations governing the use of construction materials. The documentation submitted has been reviewed by Miami-Dade County Product Control Division and accepted by the Board of Rules and Appeals (BORA) to be used in Miami Dade County and other areas where allowed by the Authority Having Jurisdiction (AHJ).

This NOA shall not be valid after the expiration date stated below. The Miami-Dade County Product Control Division (In Miami Dade County) and/or the AHJ (in areas other than Miami Dade County) reserve the right to have this product or material tested for quality assurance purposes. If this product or material fails to perform in the accepted manner, the manufacturer will incur the expense of such testing and the AHJ may immediately revoke, modify, or suspend the use of such product or material within their jurisdiction. BORA reserves the right to revoke this acceptance, if it is determined by Miami-Dade County Product Control Division that this product or material fails to meet the requirements of the applicable building code.

This product is approved as described herein, and has been designed to comply with the Florida Building Code, including the High Velocity Hurricane Zone.

DESCRIPTION: Loc-Seam 360 Metal Roof Panel over Wood Deck

LABELING: Each unit shall bear a permanent label with the manufacturer's name or logo, city, state and the following statement: "Miami-Dade County Product Control Approved", unless otherwise noted herein.

RENEWAL of this NOA shall be considered after a renewal application has been filed and there has been no change in the applicable building code negatively affecting the performance of this product.

TERMINATION of this NOA will occur after the expiration date or if there has been a revision or change in the materials, use, and/or manufacture of the product or process. Misuse of this NOA as an endorsement of any product, for sales, advertising or any other purposes shall automatically terminate this NOA. Failure to comply with any section of this NOA shall be cause for termination and removal of NOA.

ADVERTISEMENT: The NOA number preceded by the words Miami-Dade County, Florida, and followed by the expiration date may be displayed in advertising literature. If any portion of the NOA is displayed, then it shall be done in its entirety.

INSPECTION: A copy of this entire NOA shall be provided to the user by the manufacturer or its distributors and shall be available for inspection at the job site at the request of the Building Official.

This NOA renews NOA # 05-0726.02 and consists of pages 1 through 7.
The submitted documentation was reviewed by Alex Tigera.

PRODUCT CONTROL ACCEPTED

ROOFING ASSEMBLY APPROVAL

Category: Roofing

Sub-Category: Metal, Panels (Non-Structural)

Material: Steel

Deck Type: Wood

Maximum Design Pressure **-86 psf**

TRADE NAMES OF PRODUCTS MANUFACTURED OR LABELED BY APPLICANT:

Product	Dimensions	Test Specifications	Product Description
Loc-seam 360	Length: various Height: 2" Width:16" Thickness 0.026	PA 110	Corrosion resistant, galvalume, preformed, standing seam, coated, pre-finished, metal panels.
Panel Clips	Length: 3" Width: 1-½" Height: 2-3/8" Thickness 0.026	PA 110	Corrosion resistant, two piece formed, painted or unpainted steel clips for metal panel installation.
End Lap Stiffener	Length: 12-½" Width: 15-½" Thickness 0.060"	PA 110	Corrosion resistant, galvalume, preformed, half-circle tabs, stiffening plate utilized at end laps.

EVIDENCE SUBMITTED

Test Agency	Test Identifier	Test Name/Report	Date
Farabough Testing and Engineering, Inc.	T164-05	TAS-125 per UL 580	June 2005
Hurricane Test Laboratory, Inc.	0207-0403-01 Specimen # 1-3	Uplift Pressure Testing UL 580	June 2001
Celotex Corp.	#52034	Salt Spray ASTM B 117	April 2000
Asphalt Technologies	ABC-01-02-01	Accelerated Weathering ASTM G 26	May. 2000
Celotex Corp.	#52034-2	PA 114 (Appendix "G")	March 2000
Celotex Corp.	#520534-3	PA-100-95 (Wind Driven Rain Test)	March 2000

APPROVED ASSEMBLY:

SYSTEM A-1:	Loc-Seam 360 Metal Panel with Mechanically Crimped Seam
Deck Type:	Wood, Non Insulated
Slope Range:	2":12" or greater
Maximum Uplift Pressure:	**See fastening options below.**

Deck Attachment: In accordance with applicable Building Code, but in no case shall it be less than #8 x 2-1/2" wood deck screws spaced 6" o.c. In reroofing, where the deck is less than $^{19}/_{32}$" thick (Minimum $^{15}/_{32}$") The above attachment method must be in addition to existing attachment.

Underlayment: Minimum underlayment shall be an ASTM D 226 Type II installed with a minimum 4" side-lap and 6" end-laps. Underlayment shall be fastened with corrosion resistant tin-caps and 1-¼" annular galvanized ring-shank roofing nails, spaced 6" o.c. at all laps and two staggered rows 12" o.c. in the field of the roll. Or, any approved underlayment having a current NOA.

Fire Barrier Board: Any approved fire barrier having a current NOA. Or for class A or B fire rating, install minimum ¼" thick Georgia Pacific "Dens Deck" (with current NOA) or minimum 4mm thick of Tritex, RockRoof (with current NOA) or $^{5}/_{8}$" water resistant type X gypsum sheathing with treated core and facer.

Valleys: Valley construction shall be in compliance with Roofing Application Standard RAS 133 and with American Buildings Company current published installation instructions.

Metal Panels and Accessories: Install the "Loc-Seam 360 Metal Panel" panels including flashings penetrations, valleys, end laps and accessories in compliance American Building Company's current, published installation instructions and in compliance with the minimum requirements detailed in Roofing Application Standard RAS 133.

Fastening #1: Loc-Seam 360 panels shall be attached with Loc-Seam panel clips and shall be located at each panel rib side lap spaced at a maximum of 24"o.c., fastened with a minimum of (2) # 10 X 1 1/2" STHHW ATLAS woodmate screws of sufficient length to penetrate through the sheathing a minimum $^{3}/_{16}$ of an inch. Standing seams shall be mechanically seamed to a full 180° seam, (single lock).
(Maximum Design Pressure –52.5 psf; See General Limitation #1)

Fastening #2: Loc-Seam 360 panels shall be attached with Loc-Seam panel clips and shall be located at each panel rib side lap spaced at a maximum of 12"o.c., fastened with a minimum of (2) # 10 X 1 1/2" STHHW ATLAS woodmate screws of sufficient length to penetrate through the sheathing a minimum $^{3}/_{16}$ of an inch. Standing seams shall be mechanically seamed to a full 180° seam, (single lock). Panel perimeters shall be attached to the substrate using # 10 STHHW ATLAS woodmate screws long enough to penetrate through the sheathing a minimum of 3/16" at 6" o.c. on the longitudinal side and 3-1/4" o.c. at the panel ends.
(Maximum Design Pressure –86 psf; See General Limitation #1)

SYSTEM LIMITATIONS

1. The maximum design pressure limitation listed herein shall be applicable to all roof pressure zones (i.e. field, perimeters, and corners). Neither rational analysis, nor extrapolation shall be permitted for enhanced fastening at enhanced pressure zones (i.e. perimeters, and corners).

2. Panel shall be roll formed in continuous lengths from eave to ridge. Maximum lengths shall be as described in the Roofing Application Standard RAS 133.

3. All panels shall be permanently labeled with the manufacturer's name or logo, city, state and the following statement: "Miami Dade County Product Control Approved".

PROFILE DRAWINGS

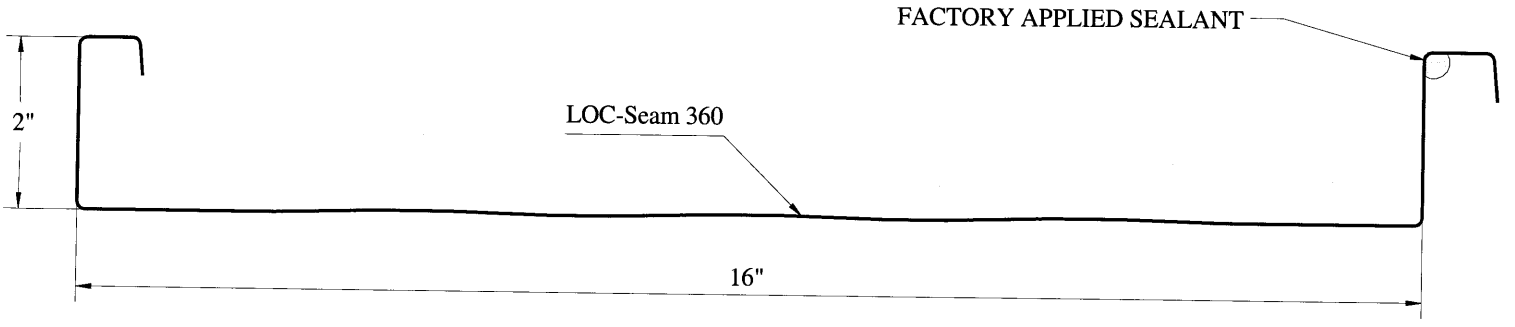

LOC-SEAM 360 METAL PANEL

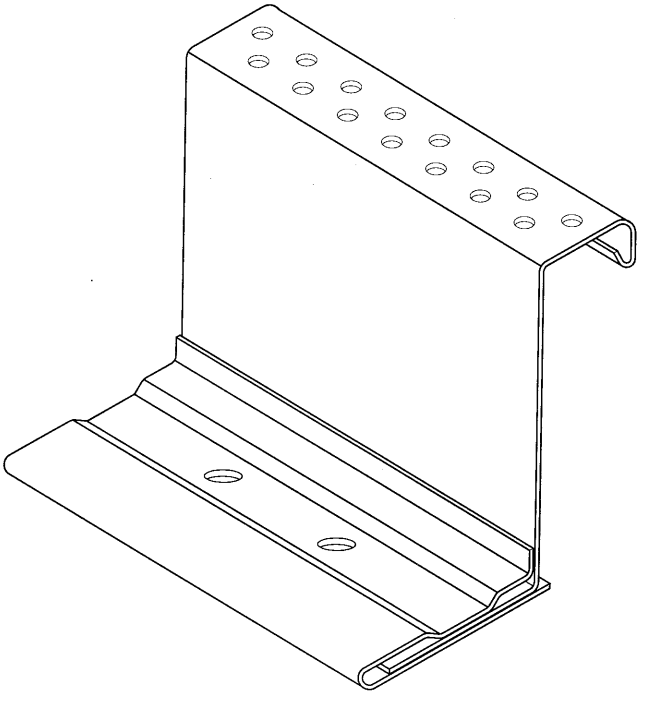

PANEL CLIP

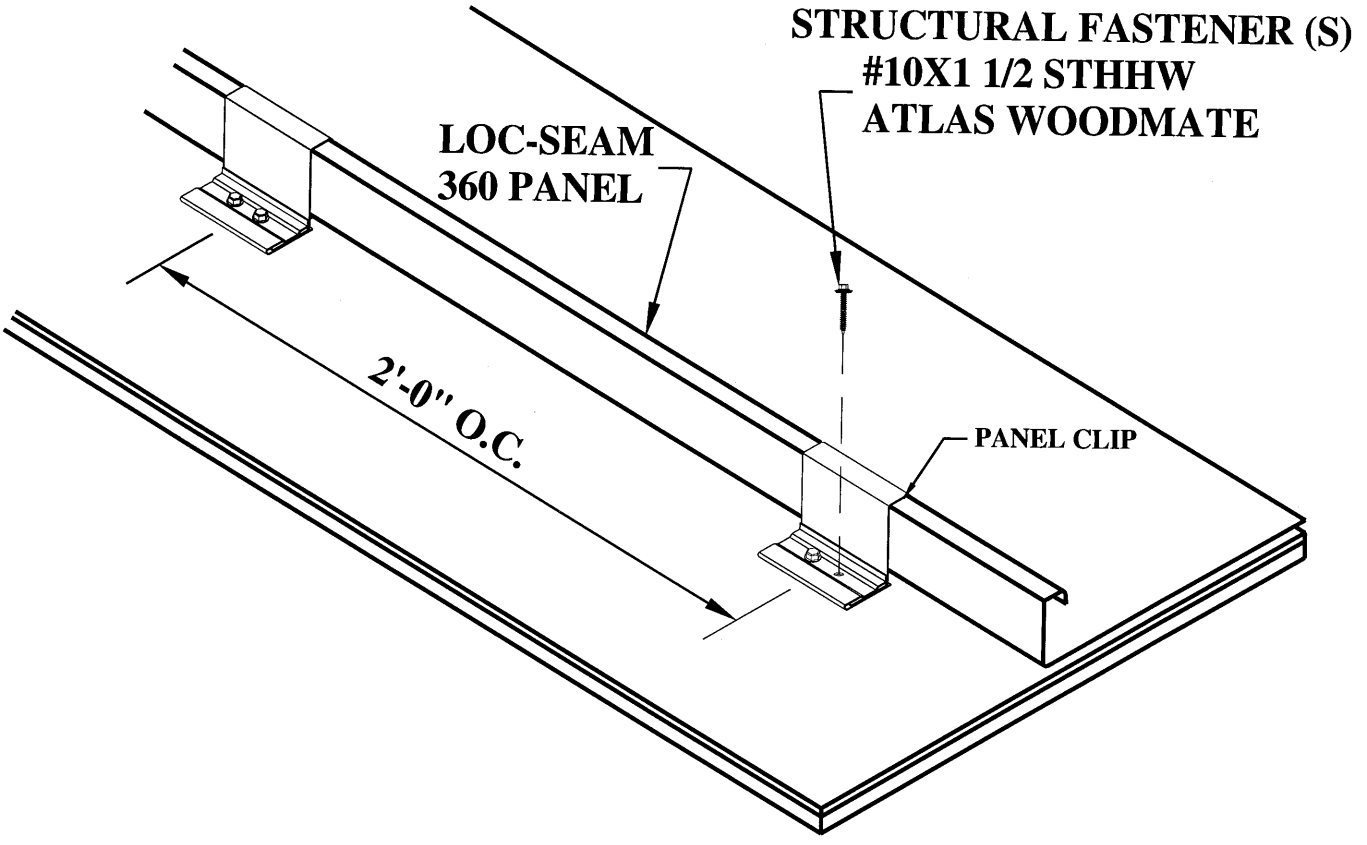

HOOK TAB OF CLIP OVER MALE LEG OF PANEL AND ROTATE DOWN INTO POSITION, SECURE THE CLIP TO THE SUBSTRATE WITH TWO STRUCTURAL FASTENERS. A GAUGE SHOULD BE USED TO MANTAIN PANEL MODULE.

LOC-SEAM 360 ROOF PANEL AND PANEL CLIPS (FASTENING OPTION #1)

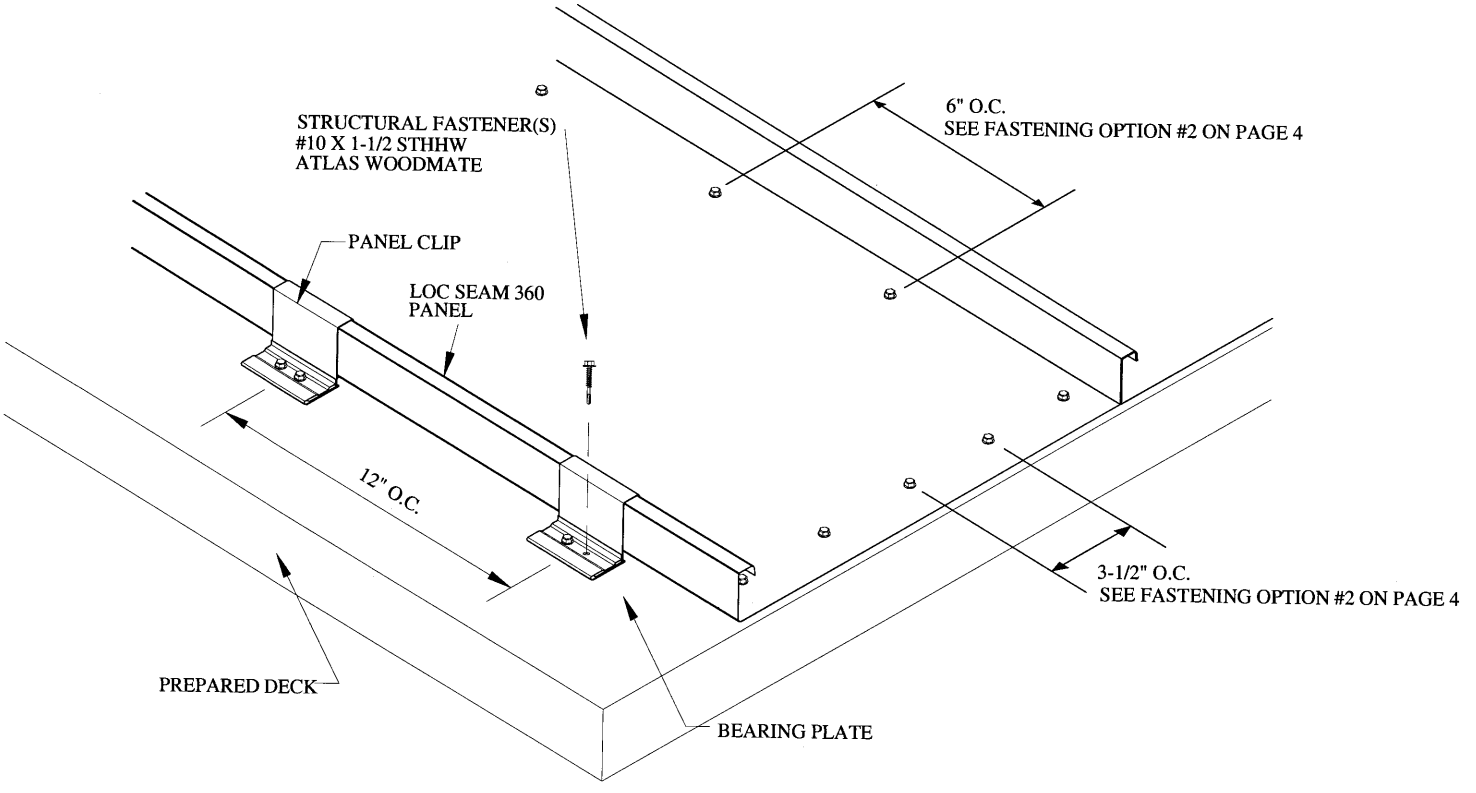

LOC-SEAM 360 ROOF PANEL AND PANEL CLIPS (FASTENING OPTION #2)

END OF THIS ACCEPTANCE