MIAMI-DADE COUNTY

BUILDING CODE COMPLIANCE OFFICE (BCCO)
PRODUCT CONTROL DIVISION

MIAMI-DADE COUNTY, FLORIDA
METRO-DADE FLAGLER BUILDING
140 WEST FLAGLER STREET, SUITE 1603
MIAMI, FLORIDA 33130-1563
(305) 375-2901 FAX (305) 375-2908
www.buildingcodeonline.com

NOTICE OF ACCEPTANCE (NOA)

Palm City Mill Work Inc.
3313 SW 42 Avenue
Palm City, Fl. 34990

SCOPE:

This NOA is being issued under the applicable rules and regulations governing the use of construction materials. The documentation submitted has been reviewed by Miami-Dade County Product Control Division and accepted by the Board of Rules and Appeals (BORA) to be used in Miami Dade County and other areas where allowed by the Authority Having Jurisdiction (AHJ).

This NOA shall not be valid after the expiration date stated below. The Miami-Dade County Product Control Division (In Miami Dade County) and/or the AHJ (in areas other than Miami Dade County) reserve the right to have this product or material tested for quality assurance purposes. If this product or material fails to perform in the accepted manner, the manufacturer will incur the expense of such testing and the AHJ may immediately revoke, modify, or suspend the use of such product or material within their jurisdiction. BORA reserves the right to revoke this acceptance, if it is determined by Miami-Dade County Product Control Division that this product or material fails to meet the requirements of the applicable building code.

This product is approved as described herein, and has been designed to comply with the Florida Building Code, including the High Velocity Hurricane Zone.

DESCRIPTION: The **Series "PCM-DP70/97A" Outswing Mahogany Wood French Doors – L.M.I.**

APPROVAL DOCUMENT: Drawing No **PCM-DP70/97A**, Rev **A**, sheets 1 through 8 of 8, titled "French Door," prepared by manufacturer, dated 09/23/97and last revised on June 21, 2006, signed and sealed by Warren W. Schaefer. P. E. ., bearing the Miami-Dade County Product Control Renewal stamp with the Notice of Acceptance number and expiration date by the Miami-Dade County Product Control Division.

MISSILE IMPACT RATING: Large & Small Missile Impact Resistant

LABELING: Each unit shall bear a permanent label with the manufacturer's name or logo, city, state and following statement: "Miami-Dade County Product Control Approved", unless otherwise noted herein.

RENEWAL of this NOA shall be considered after a renewal application has been filed and there has been no change in the applicable building code negatively affecting the performance of this product.

TERMINATION of this NOA will occur after the expiration date or if there has been a revision or change in the materials, use, and/or manufacture of the product or process. Misuse of this NOA as an endorsement of any product, for sales, advertising or any other purposes shall automatically terminate this NOA. Failure to comply with any section of this NOA shall be cause for termination and removal of NOA.

ADVERTISEMENT: The NOA number preceded by the words Miami-Dade County, Florida, and followed by the expiration date may be displayed in advertising literature. If any portion of the NOA is displayed, then it shall be done in its entirety.

INSPECTION: A copy of this entire NOA shall be provided to the user by the manufacturer or its distributors and shall be available for inspection at the job site at the request of the Building Official.

This NOA **renews NOA # 01-0516.02** consists of this page 1 and evidence pages E-1 & E-2, as well as approval document mentioned above.

The submitted documentation was reviewed by **Ishaq I. Chanda, P.E.**

PRODUCT CONTROL ACCEPTED

6/30/16

NOTICE OF ACCEPTANCE: EVIDENCE SUBMITTED

A. DRAWINGS (transferred from file # 01-0516.04)

1. Manufacturer's die drawings and sections.
2. Drawing No PCM-DP70/97A, Rev **A**, sheets 1 through 8 of 8, titled "French Door," prepared by manufacturer, dated 09/23/97and last revised on June 21, 2006, signed and sealed by Warren W. Schaefer, P.E.

B. TESTS (transferred from file # 01-0516.04) Original test conducted per SFBC, PA 201, 202 & 203-94, now termed as FBC, TAS 201, 202 &203-94.

1. Test reports on 1) Air Infiltration Test, per PA 202-94
   2) Uniform Load Static Air Pressure Test, per PA 202-94
   3) Water Resistance Test, per PA 202-94
   4) Large Missile Impact Test, SFBC PA 201-94
   5) Cyclic Loading Test, per SFBC PA 203-94
   6) Forced Entry Resistance Test, per SFBC3603.2(b)5.

along with installation diagram of an out-swinging French wood door prepared by Hurricane Test Laboratory, Inc., Test Report No. **HTL 97-077**, dated 03/21/97 and 05/07/97, signed and sealed by Timothy Marshall, P.E.

C. CALCULATIONS (transferred from file # 01-0516.04)

1. Anchor revision dated June 21, 2006 complying w/ FBC 2004, signed and sealed by Warren W. Schaefer, P.E.
2. Anchor verification calculations prepared by W. W. Schaefer, Engineering & Consulting, P.A. dated 09/22/97 and revised April 02, 1998, signed and sealed by Warren W. Schaefer, P.E.

D. MATERIAL CERTIFICATIONS

1. Notice of Acceptance No. 030827.07, for "Interlayer for laminated glass" by Solutia, expiring 03-04-2009.

E. QUALITY ASSURANCE

1. Miami-Dade County Building Code Compliance Office.

F. STATEMENTS (transferred from file # 01-0516.04)

1. Statement letter of compliance to FBC 2004, dated June 21, 2006, signed by Warren W. Schaefer, P.E.(statement part of the Dwg. # PCM-DP70/97A)
2. Statement letter of conformance and "No financial interest", both dated September 29, 1997, signed by Warren W.Schaefer, P.E.
3. Statement letter of compliance, as part of above test reports.

F. OTHER

1. This NOA **renews** # 01-0516.04 for **one year**, expiring July 20, 2007.
2. Request for one year renewal dated June 28, 2006, issued by Palm City Millwork, signed by Frank Carr.
3. Letter of test scheduling dated June 28, 2006, issued by Hurricane Testing Lab, signed by Urmilla Jokhu-Sowell, P. E.
4. Glazing complies per ASTME-1300-98

Ishaq I. Chanda

Ishaq I. Chanda, P.E.
Product Control Examiner
NOA No 06-0322.02
Expiration Date: July 20, 2007
Approval Date: July 20, 2006

*NOTE: UNIT SHOWN FROM EXTERIOR.

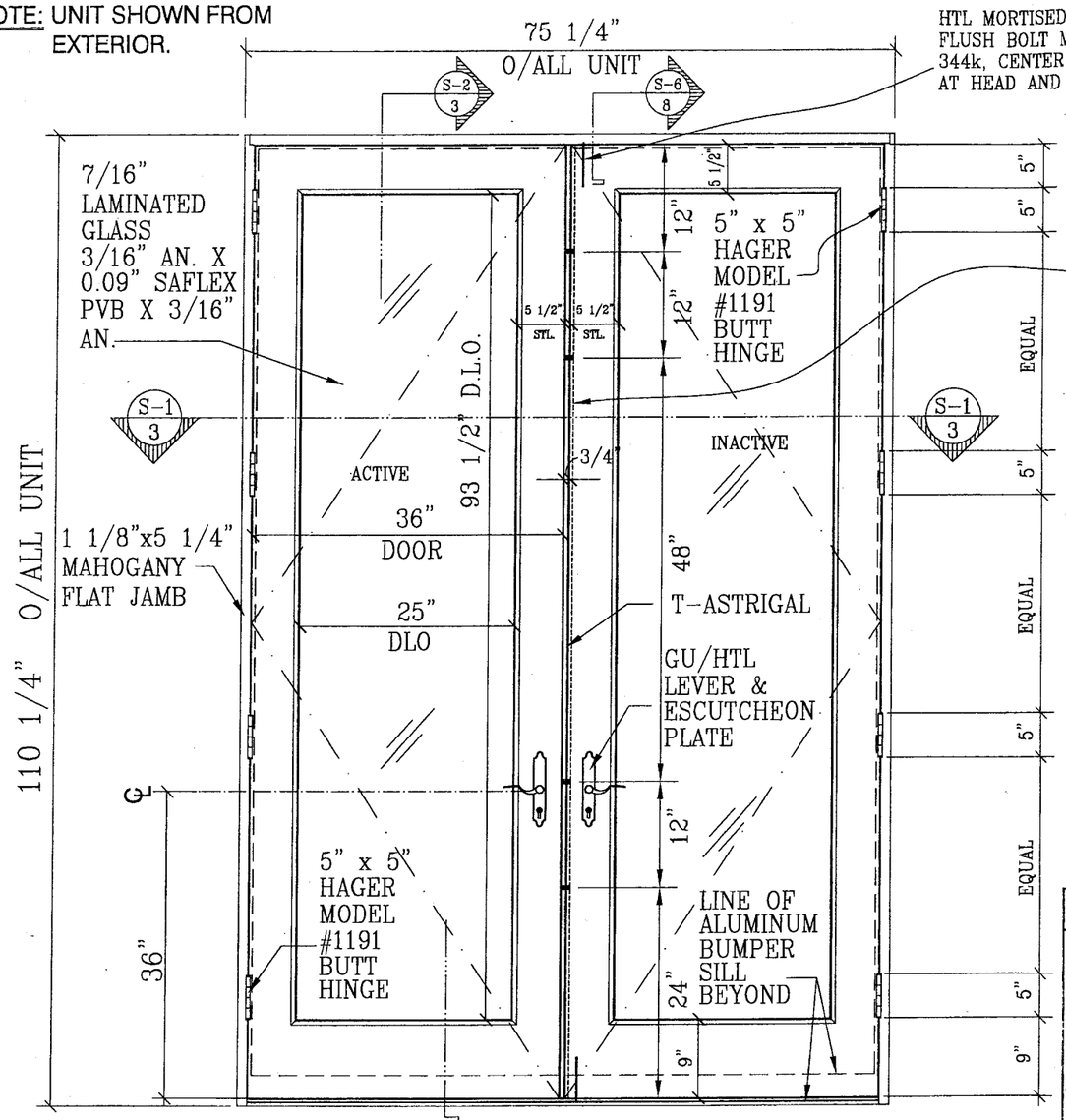

ELEVATION @ (1) LITE OUT SWING FRENCH DOORS

SCALE: 3/4"=1'-0"

PRODUCT RENEWED
as complying with the Florida Building Code
Acceptance No. 06-0322.02
Application Date JULY 24, 2007
By Ishaq I. Chanda
Miami-Dade Product Control Division

ALLOWABLE DESIGN PRESSURE	
AS CONTROLLED BY WIND PRESSURE	
NEGATIVE 70 PSF	POSITIVE 70 PSF
AS CONTROLLED BY WATER LEAKAGE	
NEGATIVE 70 PSF	POSITIVE *53.3 PSF

* WHEN WATER INFILTRATION REQUIREMENT IS NEEDED, UNITS SHALL BE INSTALLED ONLY AT LOCATIONS PROTECTED BY A CANOPY OR OVERHANG SUCH THAT THE ANGLE BETWEEN THE EDGE OF CANOPY OR OVERHANG TO SILL IS LESS THAN 45 DEG. UNLESS UNIT IS INSTALLED IN NON-HABITABLE AREAS WHERE THE UNIT AND THE AREA ARE DESIGNED TO ACCEPT WATER INFILTRATION.

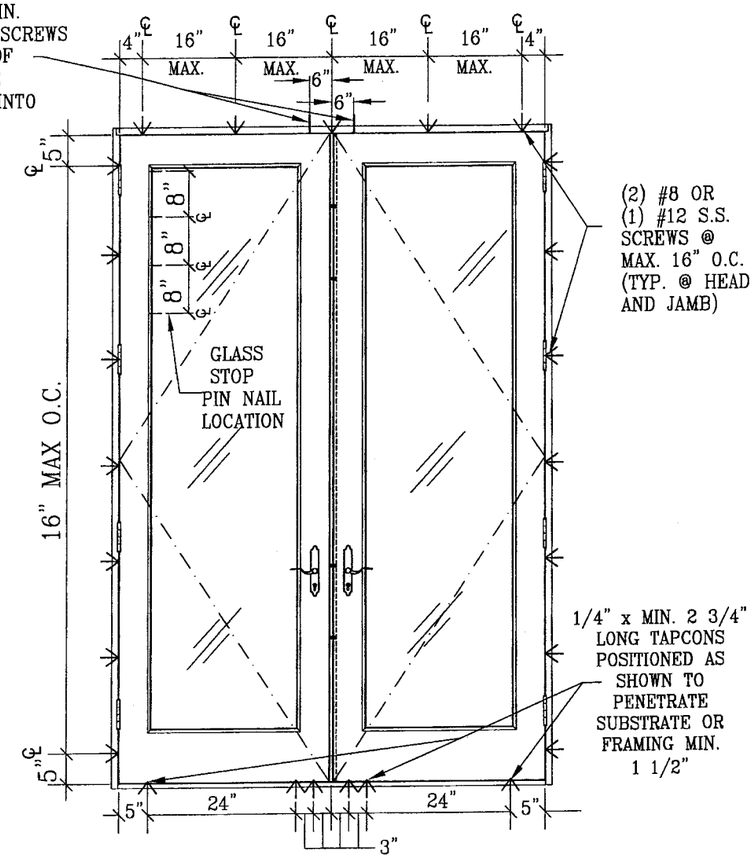

ELEVATION SHOWING FASTENER LOCATION

SCALE: 1/2"=1'-0"

ANCHOR EDGE DISTANCE REQUIREMENTS:	
WOOD SUBSTRATE:	3/4"
CMU:	2 1/2"
MIN. 2500 PSI CONCRETE:	2 1/2"
DISTANCES SPECIFIED ARE MINIMUMS.	

GENERAL NOTES CONTINUED

7. THESE GLASS DOOR SYSTEMS HAVE BEEN DESIGNED IN ACCORDANCE WITH THE 2004 FLORIDA BUILDING CODE, (FBC) INCLUDING HIGH VELOCITY HURRICANE ZONES (HVHZ).
8. THIS PRODUCT HAS BEEN TESTED IN ACCORDANCE WITH FBC PROTOCOLS TAS-201, 202 & 203 FOR LARGE MISSILE IMPACT, STRUCTURAL & CYCLIC TESTING.

GENERAL NOTES

1. THIS FRENCH DOOR SYSTEM HAS BEEN TESTED, ANALYZED AND APPROVED FOR DESIGN PRESSURES NOT TO EXCEED 70PSF.
2. BUCKING, OPENINGS & BUCKING FASTENERS MUST BE DESIGNED & INSTALLED TO WITHSTAND WIND LOADS AS DETERMINED FOR EACH APPLICATION (NEVER TO EXCEED 70 PSF)
3. BUCKING FASTENERS MAY NOT EXCEED 16" O.C. SPACING AROUND OPENINGS REGARDLESS OF CIRCUMSTANCE.
4. ALL HARDWARE & FASTENERS SHALL BE IN ACCORDANCE WITH THESE DRAWINGS & MAY NOT VARY UNLESS SPECIFICALLY MENTIONED ON THE DRAWINGS.
5. THE DETAILS & SPECIFICATIONS SHOWN HEREIN REPRESENT THE PRODUCTS PROPOSED FOR WATER, AIR, IMPACT, CYCLIC & UNIFORM STATIC AIR PRESSURE TESTING IN CONFORMANCE WITH FLORIDA BUILDING CODE PROTOCOLS TAS-201, 202, & 203.
6. ALL JAMB TO BUCKING FASTENERS MUST PENETRATE THE BUCK A MINIMUM OF 1 1/4", IF PENETRATION IS LESS THEN 1 1/4" SCREW LENGTH SHALL INCREASE AS REQUIRED.

JUN 21 2006

WARREN W. SCHAEFER, P.E.
STRUCTURAL ENGINEER
P.E. No. 44135

W. W. SCHAEFER ENGINEERING & CONSULTING, P.A.
STRUCTURAL CONSULTING ENGINEERS
8895 N. MILITARY TRAIL, SUITE C-204
PALM BEACH GARDENS, FL 33410
PHONE: (561)775-4902
FAX: (561)775-4903

REVISION	REVISION DESCRIPTION	BY	DATE
A	UPDATE GENERAL NOTES TO 2004 CODE COMPLIANCE	K.P.S.	08/05/05

PALM CITY MILLWORK, INC.
3313 SW 42ND AVE P.O. BOX 1661
PALM CITY, FL 34990
(561) 288-7086 FAX (561) 288-7440

DRAWING No./ MODEL NAME:	DESCRIPTION:		SHEET No.
PCM-DP70/97A	FRENCH DOOR		1
DATE: 09/23/97	REVISIONS: A	DADE	OF 8
SCALE: AS NOTED			

*NOTE: UNIT SHOWN FROM EXTERIOR.

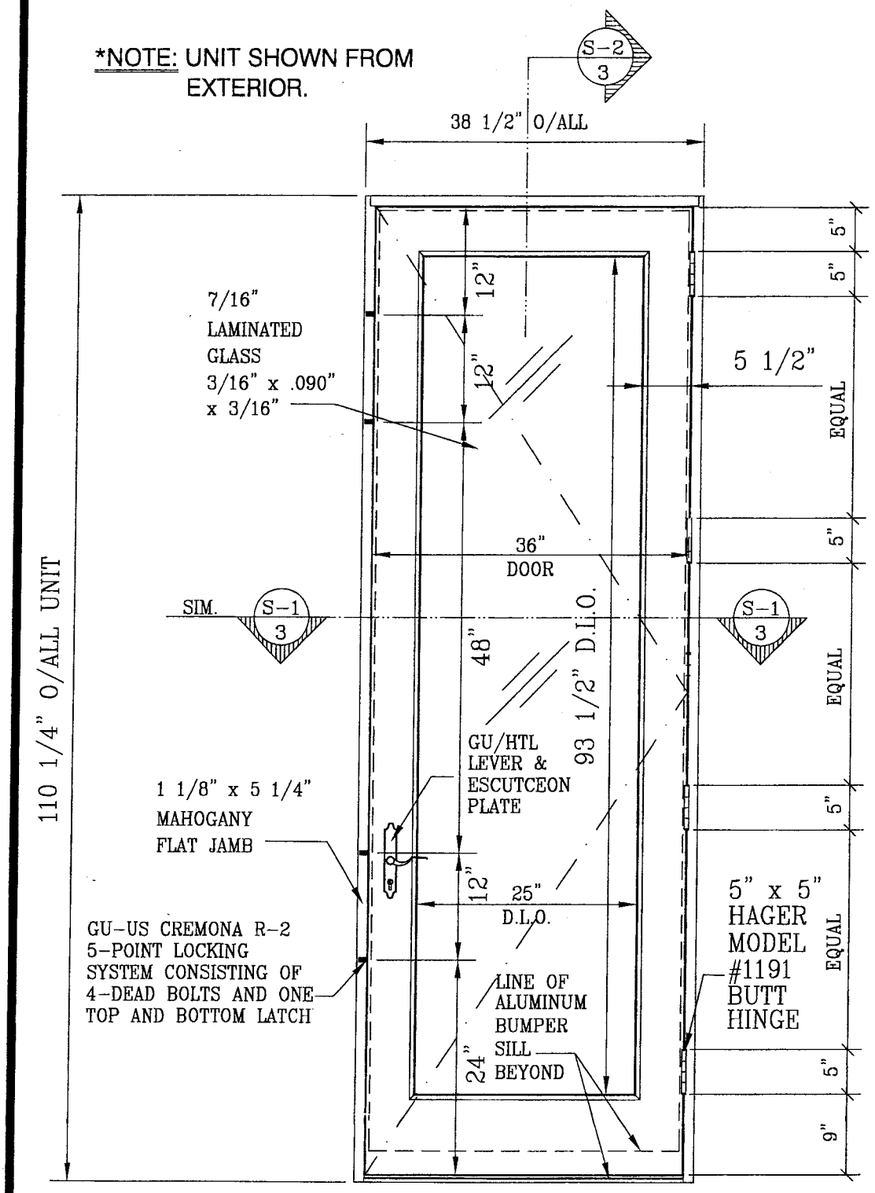

ELEVATION @ (1) LITE OUT SWING FRENCH DOOR

SCALE: 3/4"=1'-0"

GENERAL NOTES

1. THIS FRENCH DOOR SYSTEM HAS BEEN TESTED, ANALYZED AND APPROVED FOR DESIGN PRESSURES NOT TO EXCEED 70PSF.
2. BUCKING, OPENINGS & BUCKING FASTENERS MUST BE DESIGNED & INSTALLED TO WITHSTAND WIND LOADS AS DETERMINED FOR EACH APPLICATION (NEVER TO EXCEED 70 PSF)
3. BUCKING FASTENERS MAY NOT EXCEED 16" O.C. SPACING AROUND OPENINGS REGARDLESS OF CIRCUMSTANCE.
4. ALL HARDWARE & FASTENERS SHALL BE IN ACCORDANCE WITH THESE DRAWINGS & MAY NOT VARY UNLESS SPECIFICALLY MENTIONED ON THE DRAWINGS.
5. THE DETAILS & SPECIFICATIONS SHOWN HEREIN REPRESENT THE PRODUCTS PROPOSED FOR WATER, AIR, IMPACT, CYCLIC & UNIFORM STATIC AIR PRESSURE TESTING IN CONFORMANCE WITH DADE COUNTY PROTOCOLS TAS 201, 202, & 203.
6. ALL JAMB TO BUCKING FASTENERS MUST PENETRATE THE BUCK A MINIMUM OF 1 1/4", IF PENETRATION IS LESS THEN 1 1/4" SCREW LENGTH SHALL INCREASE AS REQUIRED.

ALLOWABLE DESIGN PRESSURE	
AS CONTROLLED BY WIND PRESSURE	
NEGATIVE 70 PSF	POSITIVE 70 PSF
AS CONTROLLED BY WATER LEAKAGE	
NEGATIVE 70 PSF	POSITIVE *53.3 PSF
*WERE WATER LEAKAGE IS A REQUIREMENT THE POSITIVE P.S.F. OF 53.3 WILL CONTROL	

NOTE:
* (3) 3/16" x MIN. 2 3/4" LONG TAPCONS IF INTO BLOCK OR CONCRETE.
* (6) #8 x MIN. 2 3/4" (2) @ EACH LOCATION SHOWN IF INTO WOOD FRAME.

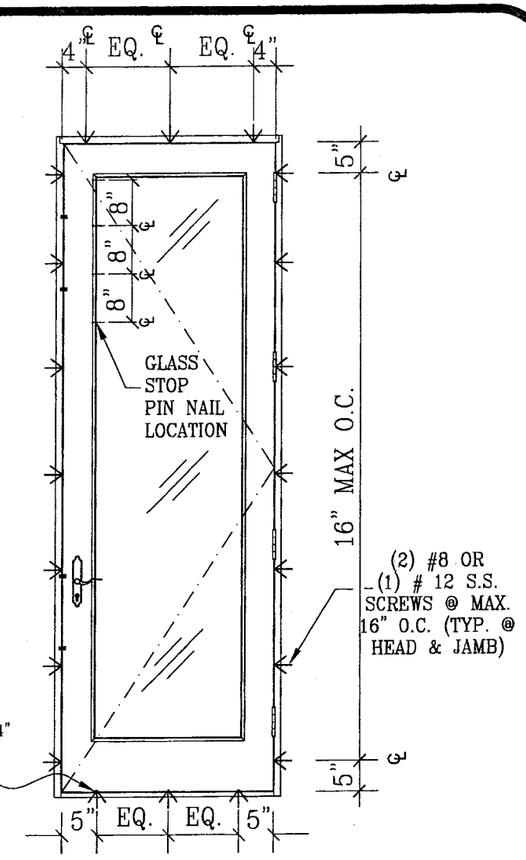

ELEVATION SHOWING FASTENER LOCATION

SCALE: 1/2"=1'-0"

PRODUCT RENEWED as complying with the Florida Building Code
Acceptance No. 06-0322.02
Expiration Date JULY 20, 2007
By Shaq I. Chanda
Miami-Dade Product Control Division

JUN 21 2006

WARREN W. SCHAEFER, P.E.
STRUCTURAL ENGINEER
P.E. No. 44135

W. W. SCHAEFER ENGINEERING & CONSULTING, P.A.
STRUCTURAL CONSULTING ENGINEERS
8895 N. MILITARY TRAIL, SUITE C-204
PALM BEACH GARDENS, FL 33410
PHONE: (561)775-4902
FAX: (561)775-4903

PALM CITY MILLWORK, INC.
3313 SW 42ND AVE P.O. BOX 1661
PALM CITY, FL 34990
(561) 288-7086 FAX (561) 288-7440

DRAWING No./ MODEL NAME	DESCRIPTION:		SHEET No.
PCM-DP70/97A	FRENCH DOOR		2 OF 8
DATE: 09/23/97	REVISIONS: A	DADE	
SCALE: AS NOTED			

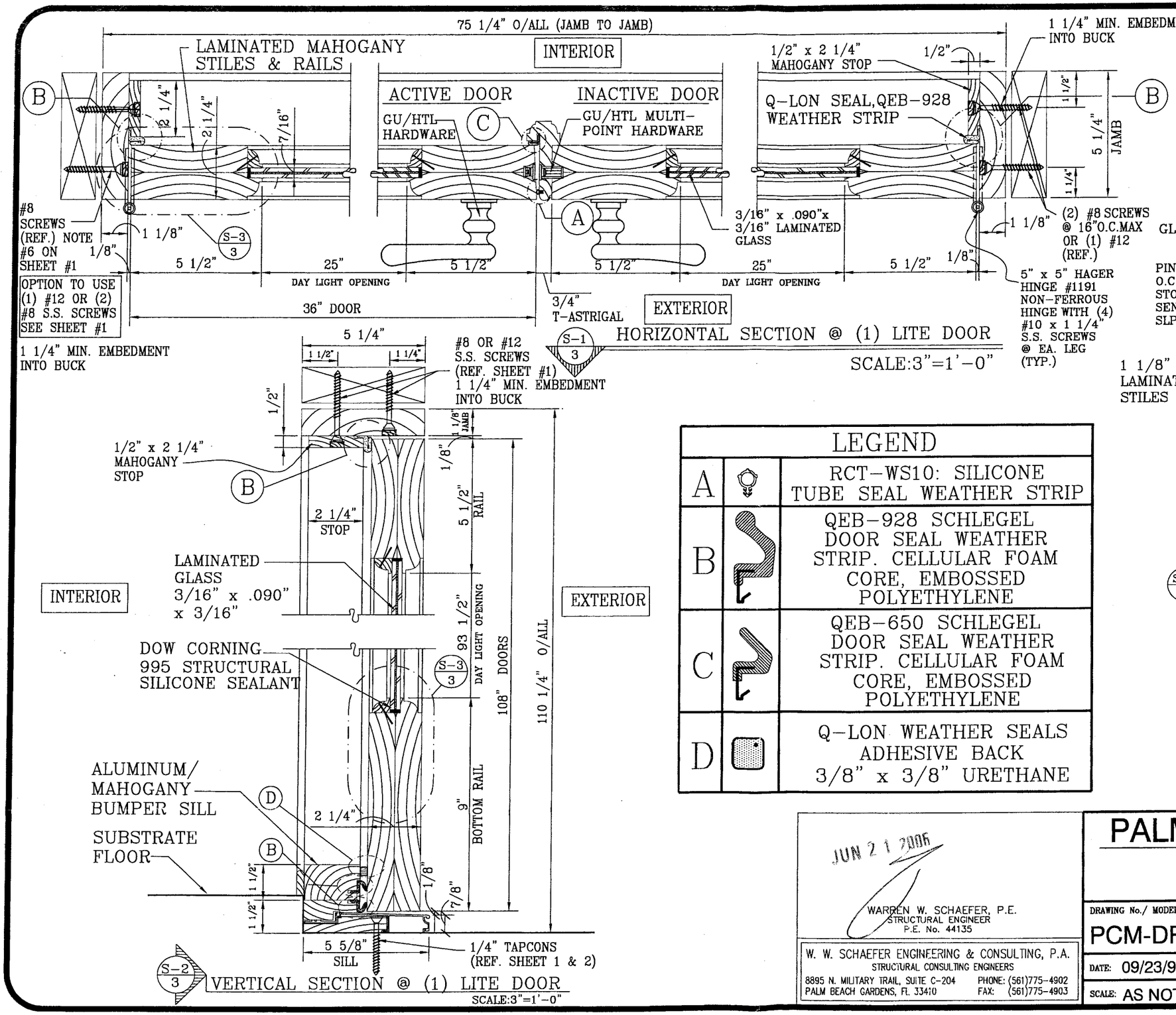

LEGEND

A		RCT-WS10: SILICONE TUBE SEAL WEATHER STRIP
B		QEB-928 SCHLEGEL DOOR SEAL WEATHER STRIP. CELLULAR FOAM CORE, EMBOSSED POLYETHYLENE
C		QEB-650 SCHLEGEL DOOR SEAL WEATHER STRIP. CELLULAR FOAM CORE, EMBOSSED POLYETHYLENE
D		Q-LON WEATHER SEALS ADHESIVE BACK 3/8" x 3/8" URETHANE

PRODUCT RENEWED
as complying with the Florida Building Code
Acceptance No. 06-0322.02
Expiration Date July 20, 2007
By Shaq I. Charak
Miami-Dade Product Control Division

JUN 21 2006

WARREN W. SCHAEFER, P.E.
STRUCTURAL ENGINEER
P.E. No. 44135

W. W. SCHAEFER ENGINEERING & CONSULTING, P.A.
STRUCTURAL CONSULTING ENGINEERS
8895 N. MILITARY TRAIL, SUITE C-204
PALM BEACH GARDENS, FL 33410
PHONE: (561)775-4902
FAX: (561)775-4903

PALM CITY MILLWORK, INC.

3313 SW 42ND AVE P.O. BOX 1661
PALM CITY, FL 34990
(561) 288-7086 FAX (561) 288-7440

DRAWING No./ MODEL NAME	DESCRIPTION:	SHEET No.
PCM-DP70/97A	FRENCH DOOR	3 OF 8
DATE: 09/23/97	REVISIONS: A	DADE
SCALE: AS NOTED		

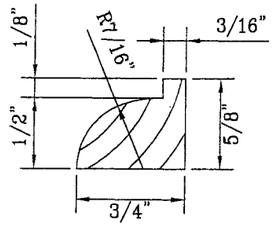

DETAIL @ GLASS STOP

SCALE: FULL SIZE

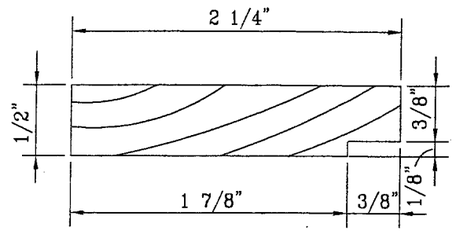

DETAIL @ DOOR STOP

SCALE: FULL SIZE

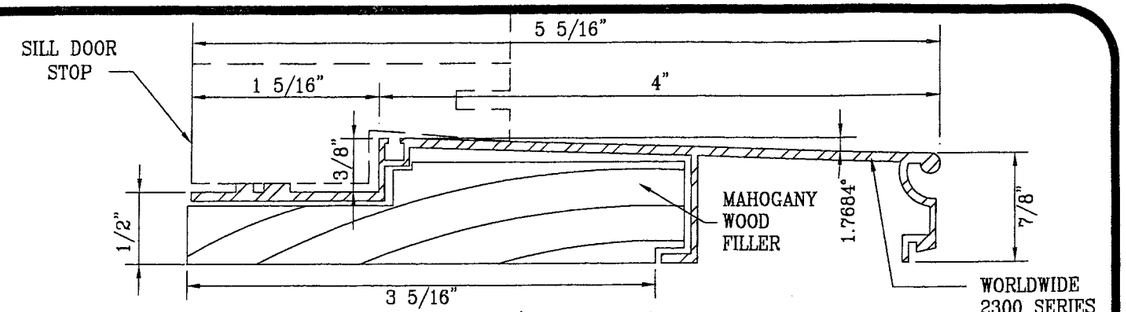

DETAIL @ ALUM./WOOD DOOR SILL

SCALE: FULL SIZE

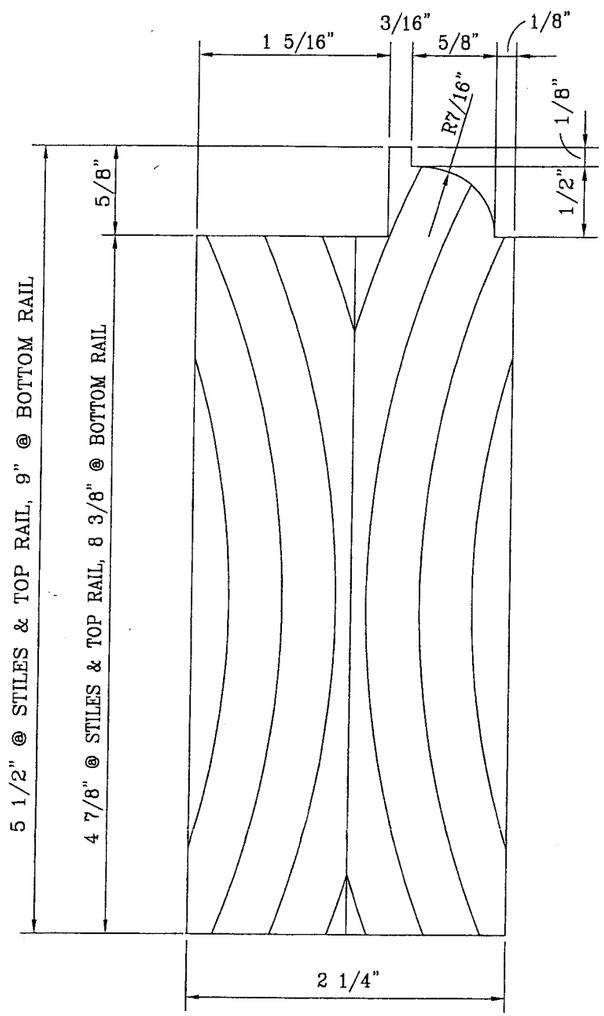

DETAIL @ DOOR STILES & RAILS

SCALE: FULL SIZE

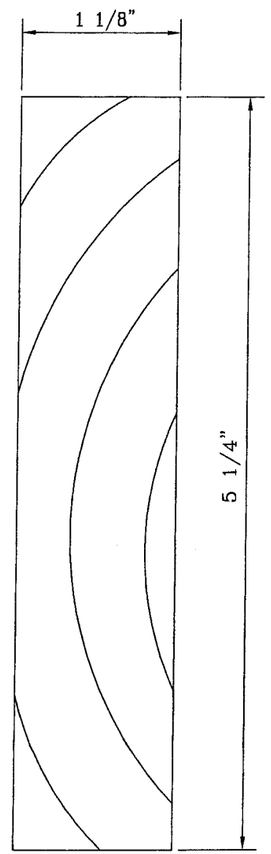

DETAIL @ DOOR JAMB

SCALE: FULL SIZE

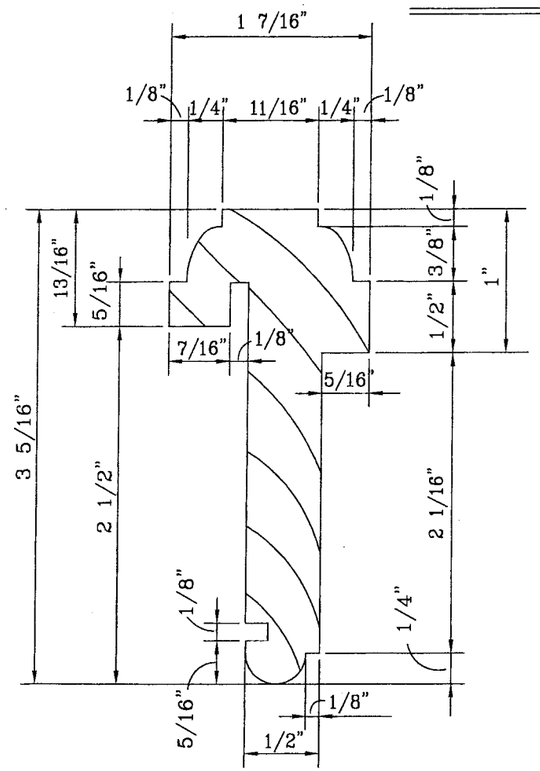

DETAIL @ T-ASTRIGAL

SCALE: FULL SIZE

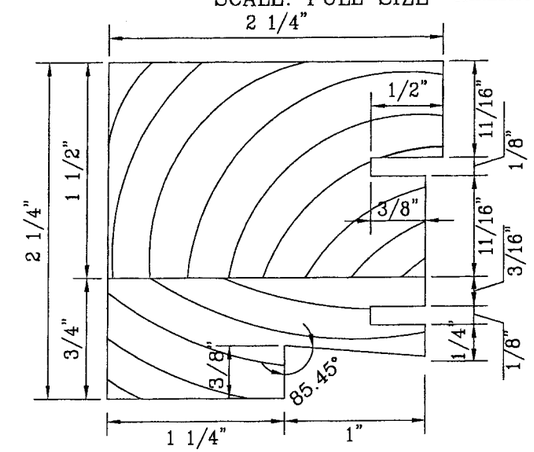

DETAIL @ SILL DOOR STOP

SCALE: FULL SIZE

PRODUCT RENEWED
as complying with the Florida
Building Code
Acceptance No 06-0322.02
Expiration Date July 20, 2007
By Ishaq I. Ulanda
Miami Dade Product Control
Division

JUN 21 2006

WARREN W. SCHAEFER, P.E.
STRUCTURAL ENGINEER
P.E. No. 44135

W. W. SCHAEFER ENGINEERING & CONSULTING, P.A.
STRUCTURAL CONSULTING ENGINEERS
8895 N. MILITARY TRAIL, SUITE C-204
PALM BEACH GARDENS, FL 33410
PHONE: (561)775-4902
FAX: (561)775-4903

PALM CITY MILLWORK, INC.

3313 SW 42ND AVE P.O. BOX 1661
PALM CITY, FL 34990
(561) 288-7086 FAX (561) 288-7440

DRAWING No./ MODEL NAME:	DESCRIPTION:		SHEET No.
PCM-DP70/97A	FRENCH DOOR		4
DATE: 09/23/97	REVISIONS: A	DADE	OF 8
SCALE: AS NOTED			

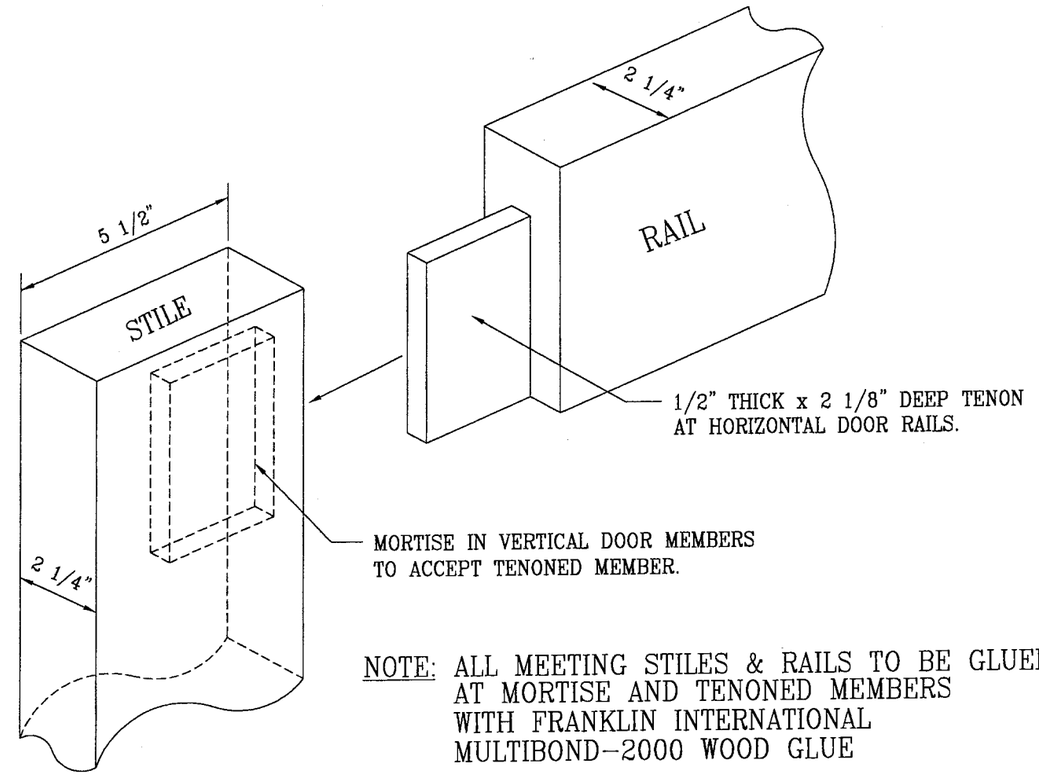

NOTE: ALL MEETING STILES & RAILS TO BE GLUED AT MORTISE AND TENONED MEMBERS WITH FRANKLIN INTERNATIONAL MULTIBOND-2000 WOOD GLUE

TYP. MORTISE & TENON CORNER DETAIL

SCALE: N.T.S.

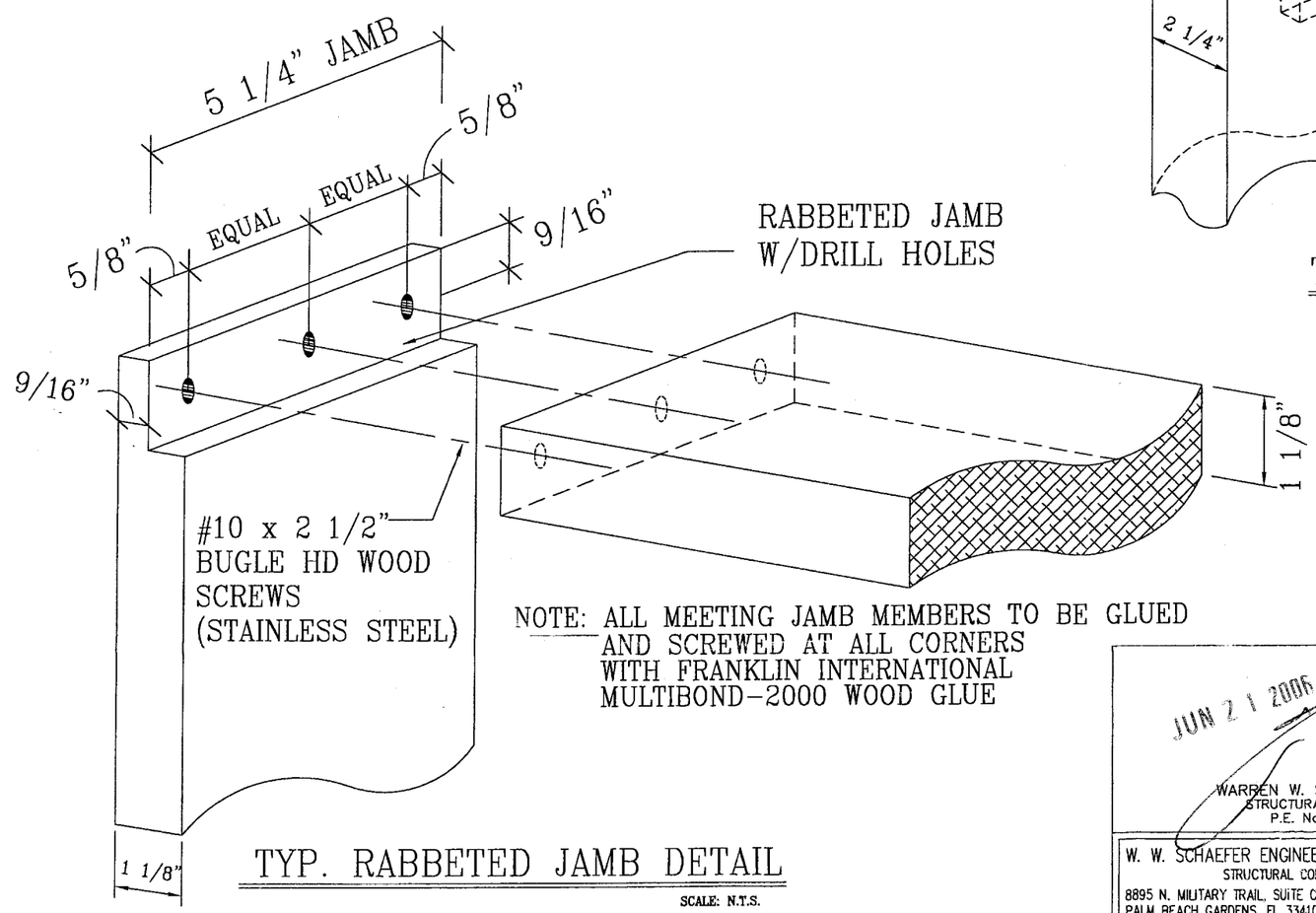

NOTE: ALL MEETING JAMB MEMBERS TO BE GLUED AND SCREWED AT ALL CORNERS WITH FRANKLIN INTERNATIONAL MULTIBOND-2000 WOOD GLUE

TYP. RABBETED JAMB DETAIL

SCALE: N.T.S.

PRODUCT RENEWED
as complying with the Florida
Building Code
Acceptance No 06-0322.02
Expiration Date July 20, 2007
By Ishay I. Chanda
Miami Dade Product Control
Division

JUN 21 2006

WARREN W. SCHAEFER, P.E.
STRUCTURAL ENGINEER
P.E. No. 44135

W. W. SCHAEFER ENGINEERING & CONSULTING, P.A.
STRUCTURAL CONSULTING ENGINEERS
8895 N. MILITARY TRAIL, SUITE C-204 PHONE: (561)775-4902
PALM BEACH GARDENS, FL 33410 FAX: (561)775-4903

PALM CITY MILLWORK, INC.

3313 SW 42ND AVE P.O. BOX 1661
PALM CITY, FL 34990
(561) 288-7086 FAX (561) 288-7440

DRAWING No./ MODEL NAME	DESCRIPTION:		SHEET No.
PCM-DP70/97A	FRENCH DOOR		5
DATE: 09/23/97	REVISIONS: A	DADE	OF 8
SCALE: AS NOTED			

NOTE TO BUCK INSTALLER AND/OR ARCHITECT

POINT LOADS FROM EACH DOOR LATCH EXISTS AT THE HEAD JAMB. DESIGNER SHOULD CONSIDER THIS LOAD WHEN SPECIFYING BUCK TO HEAD FASTENERS. (LOAD VARIES WITH SIZE OF DOORS).

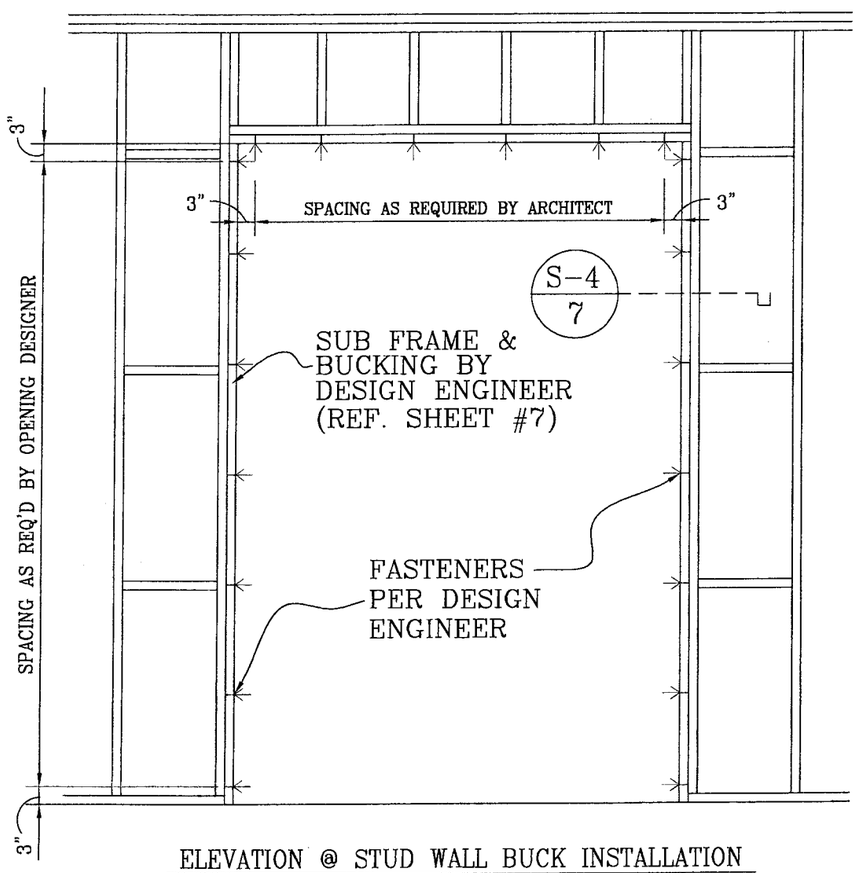

ELEVATION @ STUD WALL BUCK INSTALLATION

SCALE: 1/2"=1'-0"

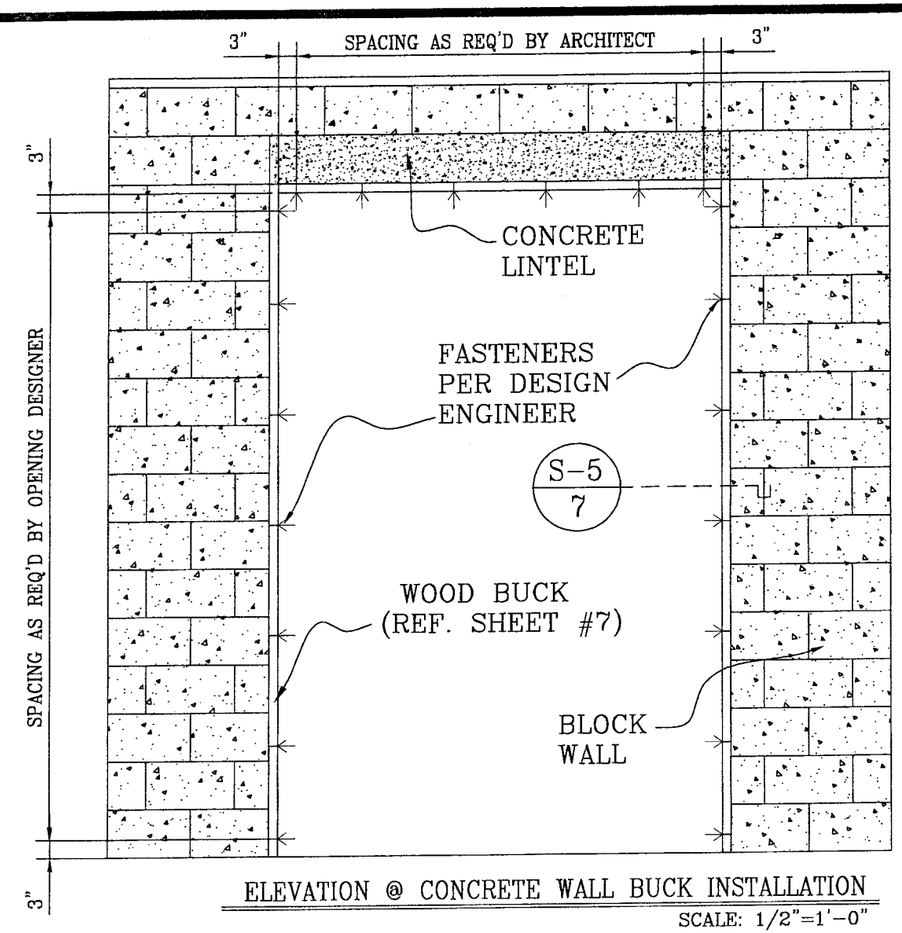

ELEVATION @ CONCRETE WALL BUCK INSTALLATION

SCALE: 1/2"=1'-0"

PRODUCT RENEWED
as complying with the Florida Building Code
Acceptance No 06-0322.02
Expiration Date July 20, 2007
By Isaac L. Chanda
Miami Dade Product Control Division

JUN 21 2006

WARREN W. SCHAEFER, P.E.
STRUCTURAL ENGINEER
P.E. No. 44135

W. W. SCHAEFER ENGINEERING & CONSULTING, P.A.
STRUCTURAL CONSULTING ENGINEERS
8895 N. MILITARY TRAIL, SUITE C-204
PALM BEACH GARDENS, FL 33410
PHONE: (561)775-4902
FAX: (561)775-4903

PALM CITY MILLWORK, INC.

3313 SW 42ND AVE P.O. BOX 1661
PALM CITY, FL 34990
(561) 288-7086 FAX (561) 288-7440

DRAWING No./ MODEL NAME:	DESCRIPTION:		SHEET No.
PCM-DP70/97A	FENCH DOOR		6
DATE: 09/23/97	REVISIONS: A	DADE	OF 8
SCALE: AS NOTED			

NOTE:
(1) #12 x 3" S.S. SCREW MAY BE USED TO FASTEN THE JAMB TO THE BUCK AT 16" O.C. IN LIEU OF THE (2) #8 S.S. SCREWS.
THE #12 SCREW MAY BE PLACED AT EITHER THE OUTER OR INNER PORTION OF THE JAMB PROVIDING THERE IS A MINIMUM EDGE DISTANCE OF 1 1/4" AT BOTH THE JAMB AND BUCKS.

NOTE:
1/4" TAPCON CAN BE USED IN LIEU OF THE NO. 12 FRAME FASTENERS WHEN A DIRECT MOUNT CONDITION IS REQUIRED. THE TAPCON MUST RUN THROUGH THE JAMB & SPACER AND INTO THE BLOCK/CONCRETE MIN. 1 1/4". THE JAMB MUST BE SEPERATED FROM THE BLOCK/CONCRETE WITH P.T. LUMBER.

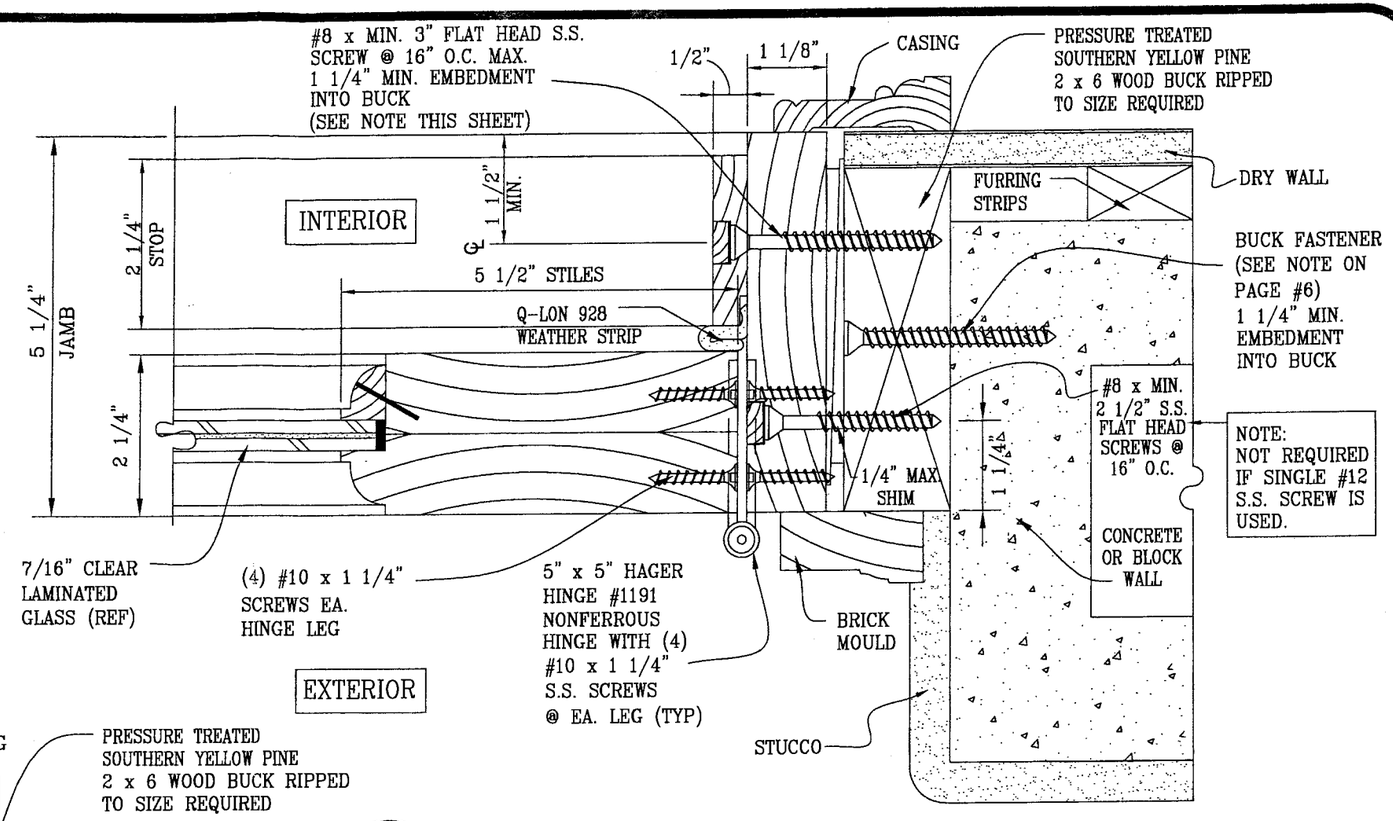

S-5 / 7 HORIZONTAL SECTION OF BLOCK WALL INSTALLATION

SCALE: 1/2"=1" (HALF SIZE)

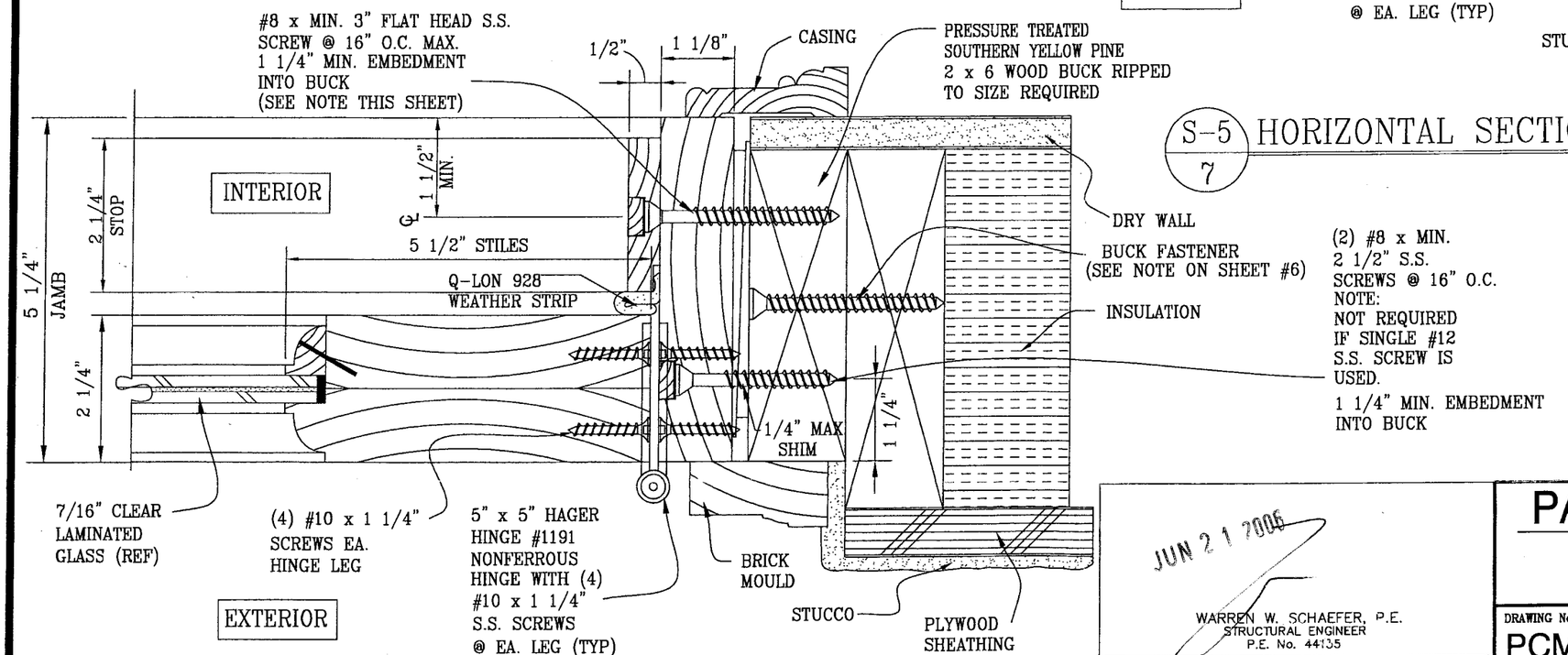

S-4 / 7 HORIZONTAL SECTION OF STUD WALL INSTALLATION

SCALE: 1/2"=1" (HALF SIZE)

PRODUCT RENEWED as complying with the Florida Building Code
Acceptance No. 06-0322.02
Expiration Date July 20, 2007
By Ishay I. Chanda
Miami Dade Product Control Division

JUN 21 2006

WARREN W. SCHAEFER, P.E.
STRUCTURAL ENGINEER
P.E. No. 44135

W. W. SCHAEFER ENGINEERING & CONSULTING, P.A.
STRUCTURAL CONSULTING ENGINEERS
8895 N. MILITARY TRAIL, SUITE C-204
PALM BEACH GARDENS, FL 33410
PHONE: (561)775-4902
FAX: (561)775-4903

PALM CITY MILLWORK, INC.

3313 SW 42ND AVE P.O. BOX 1661
PALM CITY, FL 34990
(561) 288-7086 FAX (561) 288-7440

DRAWING No./ MODEL NAME:	DESCRIPTION:		SHEET No.
PCM-DP70/97A	FRENCH DOOR		7
DATE: 09/23/97	REVISIONS: A	DADE	OF 8
SCALE: AS NOTED			

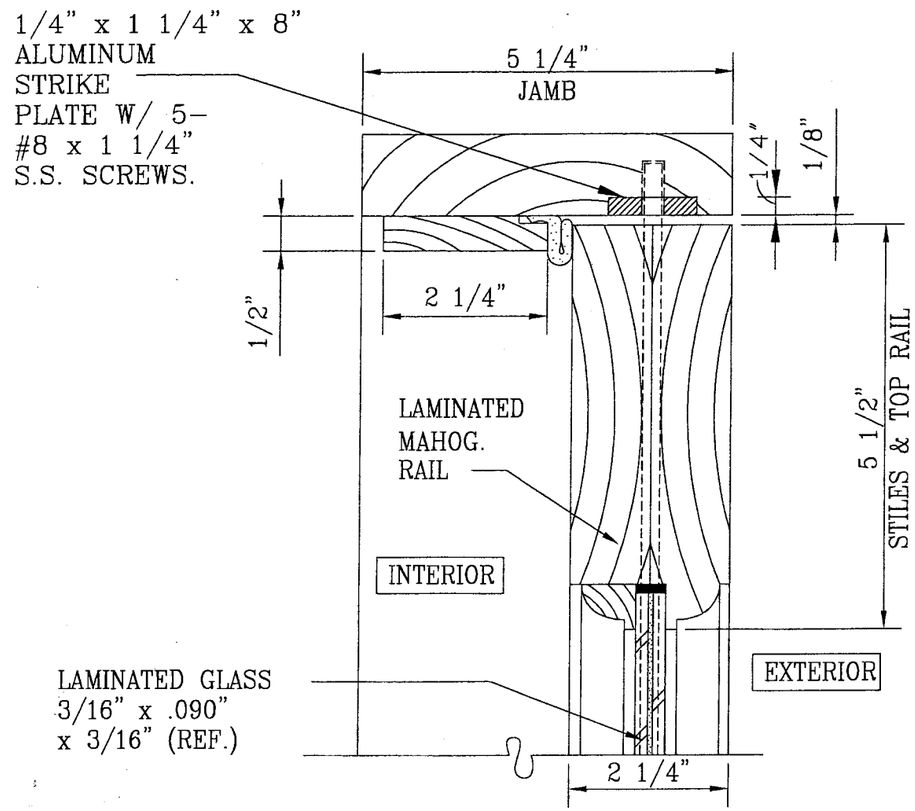

S-6 / 8 SECTION @ STRIKE PLATE IN HEAD JAMB

SCALE: 1/2"=1"

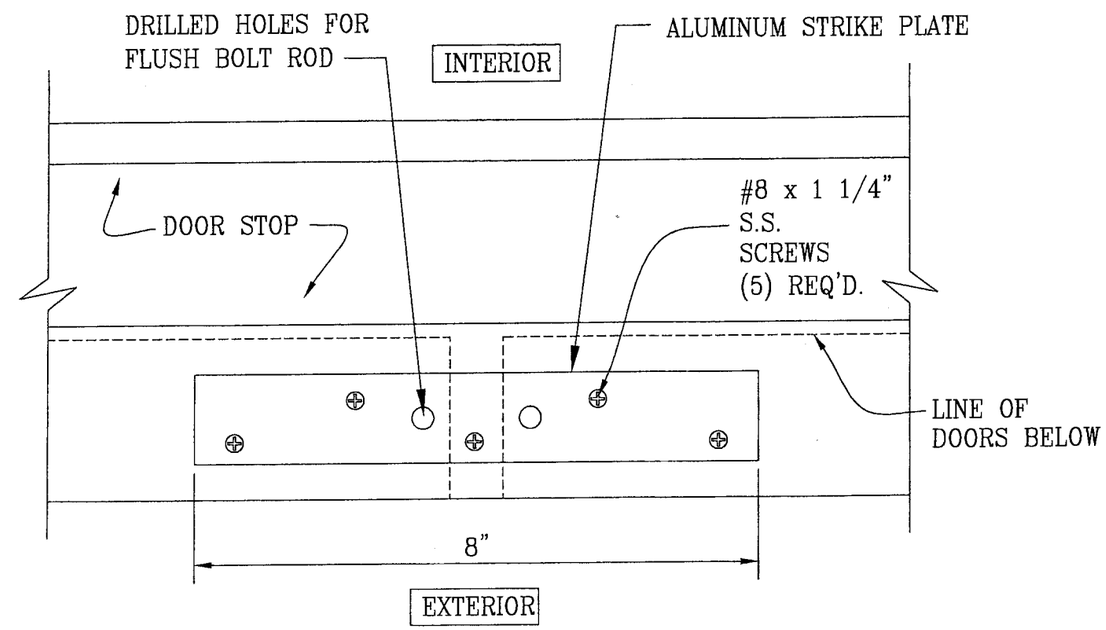

PLAN VIEW AT HEADER AND STRIKE PLATE

SCALE: 1/2"=1" (HALF SIZE)

PRODUCT RENEWED
as complying with the Florida Building Code
Acceptance No. 06-0322.02
Expiration Date JULY 20, 2007
By Ishaq I. Chand
Miami Dade Product Control Division

JUN 21 2006

WARREN W. SCHAEFER, P.E.
STRUCTURAL ENGINEER
P.E. No. 44135

W. W. SCHAEFER ENGINEERING & CONSULTING, P.A.
STRUCTURAL CONSULTING ENGINEERS
8895 N. MILITARY TRAIL, SUITE C-204
PALM BEACH GARDENS, FL 33410
PHONE: (561)775-4902
FAX: (561)775-4903

PALM CITY MILLWORK, INC.

3313 SW 42ND AVE P.O. BOX 1661
PALM CITY, FL 34990
(561) 288-7086 FAX (561) 288-7440

DRAWING No./ MODEL NAME:	DESCRIPTION:		SHEET No.
PCM-DP70/97A	FRENCH DOOR		8 OF 8
DATE: 09/23/97	REVISIONS: A	DADE	
SCALE: AS NOTED			