MIAMI-DADE COUNTY
BUILDING CODE COMPLIANCE OFFICE (BCCO)
PRODUCT CONTROL DIVISION

MIAMI-DADE COUNTY, FLORIDA
METRO-DADE FLAGLER BUILDING
140 WEST FLAGLER STREET, SUITE 1603
MIAMI, FLORIDA 33130-1563
(305) 375-2901 FAX (305) 375-2908
www.buildingcodeonline.com

NOTICE OF ACCEPTANCE (NOA)

PGT Industries
1070 Technology Drive
Nokomis, FL 34275

SCOPE:

This NOA is being issued under the applicable rules and regulations governing the use of construction materials. The documentation submitted has been reviewed by Miami-Dade County Product Control Division and accepted by the Board of Rules and Appeals (BORA) to be used in Miami Dade County and other areas where allowed by the Authority Having Jurisdiction (AHJ).

This NOA shall not be valid after the expiration date stated below. The Miami-Dade County Product Control Division (In Miami Dade County) and/or the AHJ (in areas other than Miami Dade County) reserve the right to have this product or material tested for quality assurance purposes. If this product or material fails to perform in the accepted manner, the manufacturer will incur the expense of such testing and the AHJ may immediately revoke, modify, or suspend the use of such product or material within their jurisdiction. BORA reserves the right to revoke this acceptance, if it is determined by Miami-Dade County Product Control Division that this product or material fails to meet the requirements of the applicable building code.

This product is approved as described herein, and has been designed to comply with the Florida Building Code, including the High Velocity Hurricane Zone.

DESCRIPTION: Series HR 610 Aluminum Horizontal Roller Window-NI

APPROVAL DOCUMENT: Drawing No. **4127-20**, titled "Alum. Horizontal Roller Window, Non-Impact", sheets 1 through 12 of 12, prepared by PGT Industries, dated 03/22/06, with revision dated 05/12/06, signed and sealed by Robert L. Clark, P.E., bearing the Miami-Dade County Product Control Approval stamp with the Notice of Acceptance number and approval date by the Miami-Dade County Product Control Division.

MISSILE IMPACT RATING: None

LABELING: Each unit shall bear a permanent label with the manufacturer's name or logo, city, state and following statement: "Miami-Dade County Product Control Approved", unless otherwise noted herein.

RENEWAL of this NOA shall be considered after a renewal application has been filed and there has been no change in the applicable building code negatively affecting the performance of this product.

TERMINATION of this NOA will occur after the expiration date or if there has been a revision or change in the materials, use, and/or manufacture of the product or process. Misuse of this NOA as an endorsement of any product, for sales, advertising or any other purposes shall automatically terminate this NOA. Failure to comply with any section of this NOA shall be cause for termination and removal of NOA.

ADVERTISEMENT: The NOA number preceded by the words Miami-Dade County, Florida, and followed by the expiration date may be displayed in advertising literature. If any portion of the NOA is displayed, then it shall be done in its entirety.

INSPECTION: A copy of this entire NOA shall be provided to the user by the manufacturer or its distributors and shall be available for inspection at the job site at the request of the Building Official.

This NOA consists of this page 1 and evidence pages E-1 and E-2, as well as approval document mentioned above.

The submitted documentation was reviewed by **Jaime D. Gascon, P.E.**

PRODUCT CONTROL ACCEPTED

J. Gascon
7/6/06

PGT Industries

NOTICE OF ACCEPTANCE: EVIDENCE SUBMITTED

A. DRAWINGS

1. Manufacturer's die drawings and sections.
2. Drawing No. **4127-20**, titled "Alum. Horizontal Roller Window, Non-Impact", sheets 1 through 12 of 12, prepared by PGT Industries, dated 03/22/06, with revision dated 05/21/06, signed and sealed by Robert L. Clark, P.E..

B. TESTS

1. Test reports on 1) Air Infiltration Test, per FBC, TAS 202-94
   2) Uniform Static Air Pressure Test, Loading per FBC, TAS 202-94
   3) Water Resistance Test, per PA 202-94
   4) Forced Entry Test, per FBC 2411.3.2.1 (b) and TAS 202-94
   along with marked-up drawings and installation diagram of an aluminum horizontal sliding window(OX), prepared by Fenestration Testing Laboratory, Inc., Test Report No. **FTL-4857**, dated March 08, 206, re-issued on 2/20/98, signed and sealed by Edmundo Largaespada, P.E.
2. Test reports on 1) Air Infiltration Test, per FBC, TAS 202-94
   2) Uniform Static Air Pressure Test, Loading per FBC, TAS 202-94
   3) Water Resistance Test, per FBC, TAS 202-94
   4) Forced Entry Test, per FBC 2411.3.2.1 (b) and TAS 202-94
   along with marked-up drawings and installation diagram of an aluminum horizontal sliding window (XOX), prepared by Fenestration Testing Laboratory, Inc., Test Report No. **FTL-4860**, dated February 20, 1998, signed and sealed by Edmundo Largaespada, P.E.

C. CALCULATIONS

1. Revised Anchor Calculations, and structural analysis, dated 06/12/06, prepared, signed and sealed by Robert L. Clark, P.E.
   Complies with ASTM E1300-98

D. QUALITY ASSURRANCE

1. Miami-Dade County Building Code Compliance Office

E. MATERIAL CERTIFICATIONS

1. None

F. STATEMENTS

1. Statement letter of conformance, dated 03/23/06, signed by Robert L. Clark, P.E.
2. Statement letter of no financial interest, dated 03/23/06, signed by Robert L. Clark, P.E.

Jaime D. Gascon, P.E.
Chief, Product Control Division
NOA No 06-0327.04
Expiration Date: July 27, 2011
Approval Date: July 27, 2006

NOTICE OF ACCEPTANCE: EVIDENCE SUBMITTED

G. OTHERS

1. Letter from the consultant, dated June 21, 2006, stating that the product is compliance with the Florida Building Code (FBC).

Jaime D. Gascon, P.E.
Chief, Product Control Division
NOA No 06-0327.04
Expiration Date: July 27, 2011
Approval Date: July 27, 2006

GENERAL NOTES: NON-IMPACT HORIZONTAL ROLLER WINDOW

1. GLAZING OPTIONS:

   A. 3/16" ANNEALED GLASS

   B. 3/16" TEMPERED GLASS

   C. 1/4" ANNEALED GLASS

   D. 1/4" TEMPERED GLASS

   A E. 13/16" I.G., 1/8" ANNEALED OUTBOARD, 9/16" AIR SPACE, 1/8" ANNEALED INBOARD

   F. 13/16" I.G., 1/8" TEMPERED OUTBOARD, 9/16" AIR SPACE, 1/8" TEMPERED INBOARD

   G. 13/16" I.G., 3/16" ANNEALED OUTBOARD, 7/16" AIR SPACE, 3/16" ANNEALED INBOARD

   H. 13/16" I.G., 3/16" TEMPERED OUTBOARD, 7/16" AIR SPACE, 3/16" TEMPERED INBOARD

   I. 13/16" I.G., 3/16" ANNEALED OUTBOARD, 1/2" AIR SPACE, 1/8" ANNEALED INBOARD

   J. 13/16" I.G., 3/16" TEMPERED OUTBOARD, 1/2" AIR SPACE, 1/8" TEMPERED INBOARD

2. CONFIGURATIONS: OX, XO, XOX

3. DESIGN PRESSURES: (SEE TABLES, SHEETS 2 THROUGH 4)

   A. NEGATIVE DESIGN LOADS BASED ON TESTED PRESSURE AND GLASS TABLES ASTM E 1300-98.

   B. POSITIVE DESIGN LOADS BASED ON WATER TEST PRESSURE AND GLASS TABLES ASTM E 1300-98.

   C. DESIGN PRESSURES UNDER 40 PSF ARE NOT APPLICABLE IN MIAMI-DADE COUNTY.

4. ANCHORAGE: THE 33 1/3% STRESS INCREASE HAS NOT BEEN USED IN THE DESIGN OF THIS PRODUCT. SEE SHEETS 9 THROUGH 12 FOR ANCHORAGE DETAILS.

5. MIAMI-DADE COUNTY APPROVED SHUTTERS ARE REQUIRED IN MIAMI-DADE AND WHERE IMPACT RESISTANCE IS REQUIRED,

6. FRAME AND PANEL CORNERS SEALED WITH NARROW JOINT SEALANT OR GASKET.

7. A REFERENCES: TEST REPORTS FTL-4857 AND FTL-4860.
   ELCO TEXTRON NOA: 04-0721.01, 03-0225.05
   ANSI/AF&PA NDS-2001 FOR WOOD CONSTRUCTION
   ADM-2000 ALUMINUM DESIGN MANUAL

8. SERIES/MODEL DESIGNATION HR610, PREVIOUSLY REFERRED TO AS HR710.

9. A THIS PRODUCT HAS BEEN DESIGNED & TESTED TO COMPLY WITH THE REQUIREMENTS OF THE FLORIDA BUILDING CODE, 2004 EDITION FOR THE HIGH VELOCITY HURRICANE ZONE (HVHZ).

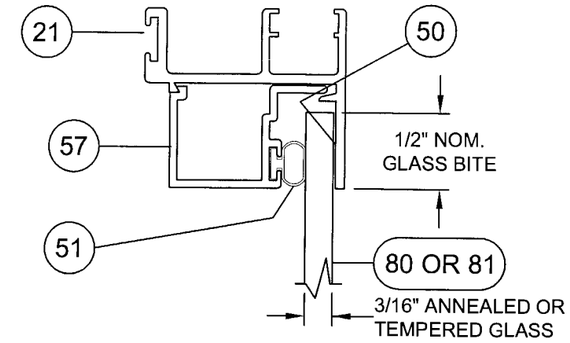

3/16" MONOLITHIC GLASS

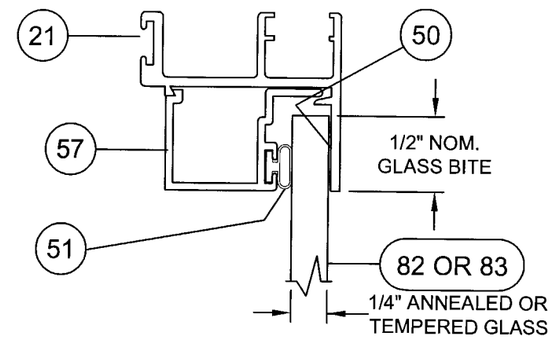

1/4" MONOLITHIC GLASS

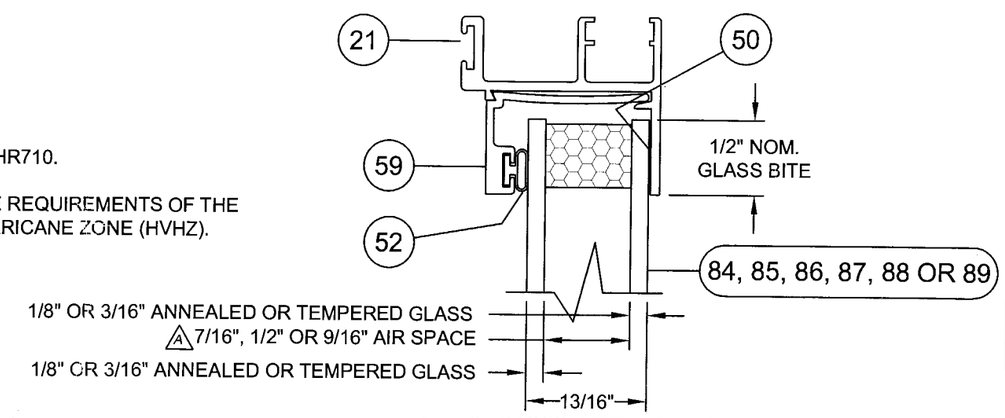

13/16" INSULATED GLASS

NOA DRAWING MAP

	SHEET
GENERAL NOTES	1
GLAZING DETAILS	1
DESIGN PRESSURES	2-4
ELEVATIONS	5
VERT. SECTIONS	6
HORIZ. SECTIONS	6
PARTS LIST	7
EXTRUSIONS	8
CORNER DETAIL	6
ANCHORAGE	9-12

Approved as complying with the Florida Building Code
Date 07/27/06
NOA# 06-0322.04
Miami-Dade Product Control Division
By

Revsd By:	Date:	Revisions:	
Revsd By:	Date:	Revisions:	
Revsd By: F.K.	Date: 5/12/06	Revisions: A	ADD AIR SPACE DIM. NOTE 1, TECH. REF. NOTE 7 & NOTE 9.
Drawn By: F.K.	Date: 2/27/06	Checked By: J.J.	Date: 3/22/06

1070 TECHNOLOGY DRIVE
NOKOMIS, FL 34275

P.O. BOX 1529
NOKOMIS, FL 34274

PGT
Visibly Better

Description: GENERAL NOTES

Title: ALUM. HORIZONTAL ROLLER WINDOW, NON-IMPACT

Series/Model:	Scale:	Sheet:	Drawing No.	Rev:
HR610	NTS	1 of 12	4127-20	A

6/15/06

Robert L. Clark, P.E.
PE #39712
Structural

HR610 (XOX 1/4,1/2,1/4) DESIGN PRESSURES FOR MIAMI-DADE COUNTY (ASTM E 1300-98)

TABLE 1.

WINDOW WIDTH	GLASS TYPE	WINDOW HEIGHT 24"		26"		36"		38 3/8"		48"		50 5/8"		54"		60"		63"	
48"	A,E,I	+75.0	-120.0	+75.0	-120.0	+75.0	-101.1	+75.0	-93.0	+70.7	-70.7	+66.2	-66.2	+60.3	-60.3	+53.1	-53.1	+50.5	-50.5
	C	+75.0	-150.0	+75.0	-150.0	+75.0	-146.2	+75.0	-133.9	+75.0	-100.0	+75.0	-93.5	+75.0	-86.4	+75.0	-76.0	+71.7	-71.7
	B,D,F,H,J	+75.0	-150.0	+75.0	-150.0	+75.0	-150.0	+75.0	-150.0	+75.0	-150.0	+75.0	-150.0	+75.0	-150.0	+75.0	-142.5	+75.0	-134.4
	G	+75.0	-150.0	+75.0	-150.0	+75.0	-150.0	+75.0	-150.0	+75.0	-137.5	+75.0	-128.6	+75.0	-118.8	+75.0	-104.5	+75.0	-98.6
53 1/8"	A,E,I	+75.0	-120.0	+75.0	-120.0	+75.0	-93.4	+75.0	-87.3	+67.4	-67.4	+62.9	-62.9	+57.2	-57.2	+48.3	-48.3	+45.6	-45.6
	C	+75.0	-150.0	+75.0	-150.0	+75.0	-130.9	+75.0	-122.9	+75.0	-93.0	+75.0	-86.8	+75.0	-80.0	+70.2	-70.2	+66.1	-66.1
	B,D,F,H,J	+75.0	-150.0	+75.0	-150.0	+75.0	-150.0	+75.0	-150.0	+75.0	-150.0	+75.0	-150.0	+75.0	-149.9	+75.0	-131.6	+75.0	-124.0
	G	+75.0	-150.0	+75.0	-150.0	+75.0	-150.0	+75.0	-150.0	+75.0	-123.1	+75.0	-115.2	+75.0	-109.1	+75.0	-96.5	+75.0	-90.9
60"	A,E,I	+75.0	-120.0	+75.0	-118.4	+75.0	-83.0	+75.0	-77.6	+60.2	-60.2	+56.2	-56.2	+52.2	-52.2	+46.7	-46.7	+44.5	-44.5
	C	+75.0	-150.0	+75.0	-150.0	+75.0	-113.1	+75.0	-106.4	+75.0	-81.6	+75.0	-78.2	+73.3	-73.3	+64.0	-64.0	+60.2	-60.2
	B,D,F,H,J	+75.0	-150.0	+75.0	-150.0	+75.0	-150.0	+75.0	-150.0	+75.0	-150.0	+75.0	-149.5	+75.0	-137.3	+75.0	-120.0	+75.0	-112.9
	G	+75.0	-150.0	+75.0	-150.0	+75.0	-149.4	+75.0	-139.7	+75.0	-108.3	+75.0	-101.2	+75.0	-93.9	+75.0	-84.0	+75.0	-80.2
74"	A,E,I	+75.0	-96.9	+75.0	-93.2	+68.9	-68.9	+65.8	-65.8	+51.5	-51.5	+48.7	-48.7	+45.0	-45.0	+40.0	-40.0	+37.5	-37.5
	C	+75.0	-105.2	+75.0	-105.2	+75.0	-89.6	+75.0	-82.3	+66.2	-66.2	+62.3	-62.3	+57.9	-57.9	+51.4	-51.4	+48.6	-48.6
	B,D,F,H,J	+75.0	-150.0	+75.0	-150.0	+75.0	-150.0	+75.0	-150.0	+75.0	-140.0	+75.0	-131.3	+75.0	-119.8	+75.0	-103.7	+75.0	-97.1
	G	+75.0	-144.6	+75.0	-144.6	+75.0	-124.0	+75.0	-118.5	+75.0	-92.7	+75.0	-87.7	+75.0	-81.1	+72.0	-72.0	+67.5	-67.5
84"	A,E,I	+75.0	-81.6	+75.0	-80.1	+60.7	-60.7	+58.1	-58.1	+47.8	-47.8	+45.4	-45.4	+42.3	-42.3	+38.1	-38.1	+36.2	-36.2
	C	+75.0	-81.6	+75.0	-81.6	+75.0	-77.6	+73.4	-73.4	+59.6	-59.6	+56.7	-56.7	+52.7	-52.7	+46.9	-46.9	+44.2	-44.2
	B,D,F,H,J	+75.0	-150.0	+75.0	-150.0	+75.0	-150.0	+75.0	-150.0	+75.0	-133.5	+75.0	-122.9	+75.0	-111.5	+75.0	-95.8	+75.0	-89.5
	G	+75.0	-112.2	+75.0	-112.2	+75.0	-109.3	+75.0	-104.5	+75.0	-86.1	+75.0	-81.8	+75.0	-76.2	+68.6	-68.6	+65.2	-65.2
96"	A,E,I	+62.5	-62.5	+62.5	-62.5	+52.2	-52.2	+50.3	-50.3	+44.1	-44.1	+42.1	-42.1	+39.6	-39.6	+35.6	-35.6	+33.8	-33.8
	C	+62.5	-62.5	+62.5	-62.5	+62.5	-62.5	+62.5	-62.5	+54.3	-54.3	+51.6	-51.6	+48.0	-48.0	+43.3	-43.3	+41.0	-41.0
	B,D,F,H,J	+75.0	-117.2	+75.0	-117.2	+75.0	-117.2	+75.0	-117.2	+75.0	-117.2	+75.0	-116.3	+75.0	-104.8	+75.0	-89.1	+75.0	-82.8
	G	+75.0	-85.9	+75.0	-85.9	+75.0	-85.9	+75.0	-85.9	+75.0	-79.4	+75.0	-75.8	+71.2	-71.2	+64.1	-64.1	+60.8	-60.8
106 3/8"	A,E,I	+51.4	-51.4	+50.9	-50.9	+46.6	-46.6	+44.7	-44.7	+40.0	-40.0	+38.7	-38.7	+37.2	-37.2	+33.3	-33.3	+31.7	-31.7
	C	+51.4	-51.4	+50.9	-50.9	+50.9	-50.9	+50.9	-50.9	+48.7	-48.7	+46.9	-46.9	+45.4	-45.4	+40.9	-40.9	+38.9	-38.9
	B,D,F,H,J	+75.0	-96.4	+75.0	-95.5	+75.0	-95.4	+75.0	-95.4	+75.0	-95.4	+75.0	-95.4	+75.0	-95.4	+75.0	-85.0	+75.0	-78.7
	G	+70.7	-70.7	+70.0	-70.0	+70.0	-70.0	+70.0	-70.0	+70.0	-70.0	+69.6	-69.6	+66.9	-66.9	+59.9	-59.9	+57.1	-57.1
108"	A,E,I	+50.0	-50.0	+49.5	-49.5	+45.8	-45.8	+44.0	-44.0	+39.4	-39.4	+38.1	-38.1	+36.7	-36.7	+33.0	-33.0	+31.4	-31.4
	C	+50.0	-50.0	+49.5	-49.5	+49.4	-49.4	+49.4	-49.4	+47.8	-47.8	+46.3	-46.3	+44.8	-44.8	+40.6	-40.6	+38.6	-38.6
	B,D,F,H,J	+75.0	-93.8	+75.0	-92.7	+75.0	-92.6	+75.0	-92.6	+75.0	-92.6	+75.0	-92.6	+75.0	-92.6	+75.0	-84.4	+75.0	-78.2
	G	+68.8	-68.8	+68.0	-68.0	+67.9	-67.9	+67.9	-67.9	+67.9	-67.9	+67.9	-67.9	+66.0	-66.0	+59.4	-59.4	+56.5	-56.5
111"	A,E,I	+47.6	-47.6	+46.9	-46.9	+44.2	-44.2	+42.8	-42.8	+38.3	-38.3	+37.1	-37.1	+35.7	-35.7	+32.4	-32.4	+30.8	-30.8
	C	+47.6	-47.6	+46.9	-46.9	+46.7	-46.7	+46.7	-46.7	+46.4	-46.4	+45.2	-45.2	+43.6	-43.6	+40.0	-40.0	+37.9	-37.9
	B,D,F,H,J	+75.0	-89.3	+75.0	-88.0	+75.0	-87.7	+75.0	-87.7	+75.0	-87.7	+75.0	-87.7	+75.0	-87.7	+75.0	-83.6	+75.0	-77.3
	G	+65.5	-65.5	+64.5	-64.5	+64.3	-64.3	+64.3	-64.3	+64.3	-64.3	+64.3	-64.3	+64.2	-64.2	+58.4	-58.4	+55.5	-55.5
120"	A,E,I	+41.7	-41.7	+40.7	-40.7	+40.0	-40.0	+39.0	-39.0	+35.5	-35.5	+34.3	-34.3	+32.9	-32.9	+30.3	-30.3	+29.1	-29.1
	C	+41.7	-41.7	+40.7	-40.7	+40.0	-40.0	+40.0	-40.0	+40.0	-40.0	+40.0	-40.0	+40.0	-40.0	+37.9	-37.9	+36.4	-36.4
	B,D,F,H,J	+75.0	-78.1	+75.0	-76.4	+75.0	-75.0	+75.0	-75.0	+75.0	-75.0	+75.0	-75.0	+75.0	-75.0	+75.0	-75.0	+75.0	-75.0
	G	+57.3	-57.3	+56.0	-56.0	+55.0	-55.0	+55.0	-55.0	+55.0	-55.0	+55.0	-55.0	+55.0	-55.0	+55.0	-55.0	+52.6	-52.6

GLASS TYPES:
TEST REPORT: FTL-4860

A. 3/16" ANNEALED
B. 3/16" TEMPERED
C. 1/4" ANNEALED
D. 1/4" TEMPERED
E. 13/16" I.G., 1/8"A, 9/16" AIR SPACE, 1/8"A
F. 13/16" I.G., 1/8"T, 9/16" AIR SPACE, 1/8"T
G. 13/16" I.G., 3/16"A, 7/16" AIR SPACE, 3/16"A
H. 13/16" I.G., 3/16"T, 7/16" AIR SPACE, 3/16"T
I. 13/16" I.G., 3/16"A, 1/2" AIR SPACE, 1/8"A
J. 13/16" I.G., 3/16"T, 1/2" AIR SPACE, 1/8"T

Approved as complying with the Florida Building Code
Date 07/27/06
NOA# 06-0322.04
Miami-Dade Product Control Division
By

Revsd By:	Date:	Revisions:	
Revsd By:	Date:	Revisions:	
Revsd By: F.K.	Date: 5/12/06	Revisions: A	ADD AIR SPACE DIM. TO GLASS TYPES E - J.
Drawn By: F.K.	Date: 2/27/06	Checked By: J.J.	Date: 3/22/06

1070 TECHNOLOGY DRIVE
NOKOMIS, FL 34275
P.O. BOX 1529
NOKOMIS, FL 34274

PGT Visibly Better

Description: DESIGN PRESSURES, XOX (1/4-1/2-1/4)
Title: ALUM. HORIZONTAL ROLLER WINDOW, NON-IMPACT

Series/Model:	Scale:	Sheet:	Drawing No.	Rev:
HR610	NTS	2 of 12	4127-20	A

6/13/06
Robert L. Clark, P.E.
PE #39712
Structural

HR610 (XOX 1/3,1/3,1/3) DESIGN PRESSURES FOR MIAMI-DADE COUNTY (ASTM E 1300-98)

TABLE 2.

WINDOW WIDTH	GLASS TYPE	WINDOW HEIGHT																	
		24"		26"		36"		38 3/8"		48"		50 5/8"		54"		60"		63"	
48"	A,E,I	+75.0	-120.0	+75.0	-120.0	+75.0	-120.0	+75.0	-118.5	+75.0	-90.0	+75.0	-84.5	+75.0	-78.3	+69.2	-69.2	+65.5	-65.5
	C	+75.0	-140.6	+75.0	-140.6	+75.0	-128.6	+75.0	-118.5	+75.0	-90.0	+75.0	-84.5	+75.0	-78.3	+69.2	-69.2	+65.5	-65.5
	B,D,F,H,J	+75.0	-150.0	+75.0	-150.0	+75.0	-150.0	+75.0	-150.0	+75.0	-150.0	+75.0	-150.0	+75.0	-146.7	+75.0	-129.8	+75.0	-122.7
	G	+75.0	-150.0	+75.0	-150.0	+75.0	-150.0	+75.0	-150.0	+75.0	-123.8	+75.0	-116.1	+75.0	-107.6	+75.0	-95.2	+75.0	-90.0
53 1/8"	A,E,I	+75.0	-114.8	+75.0	-114.8	+75.0	-114.8	+75.0	-110.2	+75.0	-83.1	+75.0	-77.9	+72.0	-72.0	+63.6	-63.6	+60.1	-60.1
	C	+75.0	-114.8	+75.0	-114.8	+75.0	-114.8	+75.0	-110.2	+75.0	-83.1	+75.0	-77.9	+72.0	-72.0	+63.6	-63.6	+60.1	-60.1
	B,D,F,H,J	+75.0	-150.0	+75.0	-150.0	+75.0	-150.0	+75.0	-150.0	+75.0	-150.0	+75.0	-146.0	+75.0	-135.1	+75.0	-119.2	+75.0	-112.6
	G	+75.0	-150.0	+75.0	-150.0	+75.0	-150.0	+75.0	-150.0	+75.0	-114.3	+75.0	-107.1	+75.0	-99.1	+75.0	-87.4	+75.0	-82.6
60"	A,E,I	+75.0	-90.0	+75.0	-90.0	+75.0	-90.0	+75.0	-90.0	+75.0	-75.8	+70.9	-70.9	+65.5	-65.5	+57.6	-57.6	+54.3	-54.3
	C	+75.0	-90.0	+75.0	-90.0	+75.0	-90.0	+75.0	-90.0	+75.0	-75.8	+70.9	-70.9	+65.5	-65.5	+57.6	-57.6	+54.3	-54.3
	B,D,F,H,J	+75.0	-150.0	+75.0	-150.0	+75.0	-150.0	+75.0	-150.0	+75.0	-142.1	+75.0	-132.9	+75.0	-122.7	+75.0	-108.0	+75.0	-101.9
	G	+75.0	-123.8	+75.0	-123.8	+75.0	-123.8	+75.0	-123.8	+75.0	-104.2	+75.0	-97.5	+75.0	-90.0	+75.0	-79.2	+74.7	-74.7
66"	A,E,I	+74.4	-74.4	+74.4	-74.4	+74.4	-74.4	+74.4	-74.4	+70.8	-70.8	+66.1	-66.1	+60.9	-60.9	+53.4	-53.4	+50.3	-50.3
	C	+74.4	-74.4	+74.4	-74.4	+74.4	-74.4	+74.4	-74.4	+70.8	-70.8	+66.1	-66.1	+60.9	-60.9	+53.4	-53.4	+50.3	-50.3
	B,D,F,H,J	+75.0	-139.5	+75.0	-139.5	+75.0	-139.5	+75.0	-139.5	+75.0	-132.7	+75.0	-123.9	+75.0	-114.2	+75.0	-100.2	+75.0	-94.4
	G	+75.0	-102.3	+75.0	-102.3	+75.0	-102.3	+75.0	-102.3	+75.0	-97.3	+75.0	-90.9	+75.0	-83.7	+73.5	-73.5	+69.2	-69.2
72"	A,E,I	+62.5	-62.5	+62.5	-62.5	+62.5	-62.5	+62.5	-62.5	+62.5	-62.5	+62.1	-62.1	+57.1	-57.1	+50.0	-50.0	+47.1	-47.1
	C	+62.5	-62.5	+62.5	-62.5	+62.5	-62.5	+62.5	-62.5	+62.5	-62.5	+62.1	-62.1	+57.1	-57.1	+50.0	-50.0	+47.1	-47.1
	B,D,F,H,J	+75.0	-117.2	+75.0	-117.2	+75.0	-117.2	+75.0	-117.2	+75.0	-117.2	+75.0	-116.5	+75.0	-107.1	+75.0	-93.8	+75.0	-88.2
	G	+75.0	-85.9	+75.0	-85.9	+75.0	-85.9	+75.0	-85.9	+75.0	-85.9	+75.0	-85.4	+75.0	-78.6	+68.8	-68.8	+64.7	-64.7
74"	A,E,I	+59.2	-59.2	+59.2	-59.2	+59.2	-59.2	+59.2	-59.2	+59.2	-59.2	+59.2	-59.2	+56.0	-56.0	+48.8	-48.8	+46.1	-46.1
	C	+59.2	-59.2	+59.2	-59.2	+59.2	-59.2	+59.2	-59.2	+59.2	-59.2	+59.2	-59.2	+56.0	-56.0	+49.0	-49.0	+46.1	-46.1
	B,D,F,H,J	+75.0	-111.0	+75.0	-110.9	+75.0	-110.9	+75.0	-110.9	+75.0	-110.9	+75.0	-110.9	+75.0	-105.1	+75.0	-91.9	+75.0	-86.4
	G	+75.0	-81.4	+75.0	-81.4	+75.0	-81.4	+75.0	-81.4	+75.0	-81.4	+75.0	-81.4	+75.0	-77.1	+67.4	-67.4	+63.4	-63.4
84"	A,E,I	+46.9	-46.9	+46.2	-46.2	+45.9	-45.9	+45.9	-45.9	+45.9	-45.9	+45.9	-45.9	+45.9	-45.9	+44.7	-44.7	+42.0	-42.0
	C	+46.9	-46.9	+46.2	-46.2	+45.9	-45.9	+45.9	-45.9	+45.9	-45.9	+45.9	-45.9	+45.9	-45.9	+44.7	-44.7	+42.0	-42.0
	B,D,F,H,J	+75.0	-87.9	+75.0	-86.5	+75.0	-86.1	+75.0	-86.1	+75.0	-86.1	+75.0	-86.1	+75.0	-86.1	+75.0	-83.9	+75.0	-78.7
	G	+64.5	-64.5	+63.5	-63.5	+63.1	-63.1	+63.1	-63.1	+63.1	-63.1	+63.1	-63.1	+63.1	-63.1	+61.5	-61.5	+57.7	-57.7
90"	A,E,I	+41.7	-41.7	+40.7	-40.7	+40.0	-40.0	+40.0	-40.0	+40.0	-40.0	+40.0	-40.0	+40.0	-40.0	+40.0	-40.0	+40.0	-40.0
	C	+41.7	-41.7	+40.7	-40.7	+40.0	-40.0	+40.0	-40.0	+40.0	-40.0	+40.0	-40.0	+40.0	-40.0	+40.0	-40.0	+40.0	-40.0
	B,D,F,H,J	+75.0	-78.1	+75.0	-76.4	+75.0	-75.0	+75.0	-75.0	+75.0	-75.0	+75.0	-75.0	+75.0	-75.0	+75.0	-75.0	+75.0	-75.0
	G	+57.3	-57.3	+56.0	-56.0	+55.0	-55.0	+55.0	-55.0	+55.0	-55.0	+55.0	-55.0	+55.0	-55.0	+55.0	-55.0	+55.0	-55.0

GLASS TYPES:

TEST REPORT: FTL-4860

A. 3/16" ANNEALED
B. 3/16" TEMPERED
C. 1/4" ANNEALED
D. 1/4" TEMPERED
E. 13/16" I.G., 1/8"A, 9/16" AIR SPACE, 1/8"A
F. 13/16" I.G., 1/8"T, 9/16" AIR SPACE, 1/8"T
G. 13/16" I.G., 3/16"A, 7/16" AIR SPACE, 3/16"A
H. 13/16" I.G., 3/16"T, 7/16" AIR SPACE, 3/16"T
I. 13/16" I.G., 3/16"A, 1/2" AIR SPACE, 1/8"A
J. 13/16" I.G., 3/16"T, 1/2" AIR SPACE, 1/8"T

Revsd By:	Date:	Revisions:	
Revsd By:	Date:	Revisions:	
Revsd By: F.K.	Date: 5/12/06	Revisions: A	ADD AIR SPACE DIM. TO GLASS TYPES E - J.
Drawn By: F.K.	Date: 2/27/06	Checked By: J.J.	Date: 3/22/06

1070 TECHNOLOGY DRIVE
NOKOMIS, FL 34275

P.O. BOX 1529
NOKOMIS, FL 34274

PGT
Visibly Better

Description: DESIGN PRESSURES, XOX (1/3-1/3-1/3)

Title: ALUM. HORIZONTAL ROLLER WINDOW, NON-IMPACT

Series/Model:	Scale:	Sheet:	Drawing No.	Rev:
HR610	NTS	3 of 12	4127-20	A

Approved as complying with the Florida Building Code
Date 07/27/06
NOA# 06-0322.04
Miami-Dade Product Control Division
By

6/13/06

Robert L. Clark, P.E.
PE #39712
Structural

HR610 (OX AND XO) DESIGN PRESSURES FOR MIAMI-DADE COUNTY (ASTM E 1300-98)

TABLE 3.

WINDOW WIDTH	GLASS TYPE	WINDOW HEIGHT 24"		26"		36"		38 3/8"		48"		50 5/8"		54"		60"		63"	
24"	A,E,I	+75.0	-120.0	+75.0	-120.0	+75.0	-120.0	+75.0	-120.0	+75.0	-120.0	+75.0	-120.0	+75.0	-120.0	+75.0	-114.3	+75.0	-108.3
	C	+75.0	-150.0	+75.0	-150.0	+75.0	-150.0	+75.0	-150.0	+75.0	-147.0	+75.0	-138.4	+75.0	-128.6	+75.0	-114.3	+75.0	-108.3
	B,D,F,H,J	+75.0	-150.0	+75.0	-150.0	+75.0	-150.0	+75.0	-150.0	+75.0	-150.0	+75.0	-150.0	+75.0	-150.0	+75.0	-150.0	+75.0	-150.0
	G	+75.0	-150.0	+75.0	-150.0	+75.0	-150.0	+75.0	-150.0	+75.0	-150.0	+75.0	-150.0	+75.0	-150.0	+75.0	-150.0	+75.0	-150.0
26 1/2"	A,E,I	+75.0	-120.0	+75.0	-120.0	+75.0	-120.0	+75.0	-120.0	+75.0	-120.0	+75.0	-120.0	+75.0	-118.0	+75.0	-104.8	+75.0	-99.2
	C	+75.0	-150.0	+75.0	-150.0	+75.0	-150.0	+75.0	-150.0	+75.0	-135.2	+75.0	-127.1	+75.0	-118.0	+75.0	-104.8	+75.0	-99.2
	B,D,F,H,J	+75.0	-150.0	+75.0	-150.0	+75.0	-150.0	+75.0	-150.0	+75.0	-150.0	+75.0	-150.0	+75.0	-150.0	+75.0	-150.0	+75.0	-150.0
	G	+75.0	-150.0	+75.0	-150.0	+75.0	-150.0	+75.0	-150.0	+75.0	-150.0	+75.0	-150.0	+75.0	-150.0	+75.0	-150.0	+75.0	-150.0
37"	A,E,I	+75.0	-120.0	+75.0	-120.0	+75.0	-113.7	+75.0	-105.8	+75.0	-85.6	+75.0	-83.7	+75.0	-81.8	+75.0	-76.1	+73.7	-73.7
	C	+75.0	-150.0	+75.0	-150.0	+75.0	-149.7	+75.0	-137.5	+75.0	-103.4	+75.0	-96.8	+75.0	-89.5	+75.0	-78.9	+74.5	-74.5
	B,D,F,H,J	+75.0	-150.0	+75.0	-150.0	+75.0	-150.0	+75.0	-150.0	+75.0	-150.0	+75.0	-150.0	+75.0	-150.0	+75.0	-140.3	+75.0	-132.5
	G	+75.0	-150.0	+75.0	-150.0	+75.0	-150.0	+75.0	-150.0	+75.0	-150.0	+75.0	-150.0	+75.0	-139.2	+75.0	-122.8	+75.0	-115.9
48"	A,E,I	+75.0	-107.0	+75.0	-107.0	+75.0	-97.5	+75.0	-91.0	+68.2	-68.2	+63.9	-63.9	+58.2	-58.2	+49.6	-49.6	+47.5	-47.5
	C	+75.0	-107.0	+75.0	-107.0	+75.0	-107.0	+75.0	-107.0	+75.0	-85.8	+75.0	-79.9	+73.5	-73.5	+64.3	-64.3	+60.5	-60.5
	B,D,F,H,J	+75.0	-150.0	+75.0	-150.0	+75.0	-150.0	+75.0	-150.0	+75.0	-150.0	+75.0	-142.1	+75.0	-130.7	+75.0	-114.3	+75.0	-107.6
	G	+75.0	-150.0	+75.0	-150.0	+75.0	-150.0	+75.0	-150.0	+75.0	-131.2	+75.0	-123.4	+75.0	-114.3	+75.0	-100.0	+75.0	-94.2
53 1/8"	A,E,I	+75.0	-88.1	+75.0	-87.4	+75.0	-87.3	+75.0	-82.5	+64.0	-64.0	+59.8	-59.8	+55.1	-55.1	+47.2	-47.2	+44.5	-44.5
	C	+75.0	-88.1	+75.0	-87.4	+75.0	-87.3	+75.0	-87.3	+75.0	-80.3	+74.7	-74.7	+68.5	-68.5	+59.7	-59.7	+56.1	-56.1
	B,D,F,H,J	+75.0	-150.0	+75.0	-150.0	+75.0	-150.0	+75.0	-150.0	+75.0	-142.8	+75.0	-132.8	+75.0	-121.8	+75.0	-106.1	+75.0	-99.7
	G	+75.0	-137.1	+75.0	-135.9	+75.0	-135.8	+75.0	-135.8	+75.0	-115.1	+75.0	-107.6	+75.0	-99.2	+75.0	-91.5	+75.0	-87.3
54"	A,E,I	+75.0	-85.6	+75.0	-84.6	+75.0	-84.5	+75.0	-81.2	+63.0	-63.0	+58.9	-58.9	+54.1	-54.1	+47.2	-47.2	+44.5	-44.5
	C	+75.0	-85.6	+75.0	-84.6	+75.0	-84.5	+75.0	-84.5	+75.0	-79.5	+73.9	-73.9	+67.8	-67.8	+59.0	-59.0	+55.4	-55.4
	B,D,F,H,J	+75.0	-150.0	+75.0	-150.0	+75.0	-150.0	+75.0	-150.0	+75.0	-141.4	+75.0	-131.4	+75.0	-120.5	+75.0	-104.9	+75.0	-98.6
	G	+75.0	-133.1	+75.0	-131.6	+75.0	-131.5	+75.0	-131.5	+75.0	-113.4	+75.0	-105.9	+75.0	-97.4	+75.0	-89.6	+75.0	-85.6
60"	A,E,I	+71.3	-71.3	+69.7	-69.7	+68.5	-68.5	+68.5	-68.5	+57.5	-57.5	+54.3	-54.3	+50.2	-50.2	+43.8	-43.8	+41.7	-41.7
	C	+71.3	-71.3	+69.7	-69.7	+68.5	-68.5	+68.5	-68.5	+68.5	-68.5	+68.5	-68.5	+63.3	-63.3	+54.9	-54.9	+51.5	-51.5
	B,D,F,H,J	+75.0	-126.8	+75.0	-123.9	+75.0	-121.7	+75.0	-121.7	+75.0	-121.7	+75.0	-121.7	+75.0	-112.6	+75.0	-97.6	+75.0	-91.5
	G	+75.0	-110.9	+75.0	-108.4	+75.0	-106.5	+75.0	-106.5	+75.0	-103.6	+75.0	-97.7	+75.0	-90.3	+75.0	-78.9	+75.0	-75.1
66"	A,E,I	+61.1	-61.1	+59.2	-59.2	+56.6	-56.6	+56.6	-56.6	+54.0	-54.0	+50.5	-50.5	+47.1	-47.1	+41.2	-41.2	+38.8	-38.8
	C	+61.1	-61.1	+59.2	-59.2	+56.6	-56.6	+56.6	-56.6	+56.6	-56.6	+56.6	-56.6	+56.6	-56.6	+51.6	-51.6	+48.3	-48.3
	B,D,F,H,J	+75.0	-108.7	+75.0	-105.3	+75.0	-100.6	+75.0	-100.6	+75.0	-100.6	+75.0	-100.6	+75.0	-100.6	+75.0	-91.8	+75.0	-85.8
	G	+75.0	-95.1	+75.0	-92.1	+75.0	-88.0	+75.0	-88.0	+75.0	-88.0	+75.0	-88.0	+75.0	-84.9	+74.2	-74.2	+69.9	-69.9
72"	A,E,I	+53.5	-53.5	+51.5	-51.5	+47.5	-47.5	+47.5	-47.5	+47.5	-47.5	+47.5	-47.5	+44.6	-44.6	+39.7	-39.7	+37.2	-37.2
	C	+53.5	-53.5	+51.5	-51.5	+47.5	-47.5	+47.5	-47.5	+47.5	-47.5	+47.5	-47.5	+47.5	-47.5	+47.5	-47.5	+45.7	-45.7
	B,D,F,H,J	+75.0	-95.1	+75.0	-91.6	+75.0	-84.5	+75.0	-84.5	+75.0	-84.5	+75.0	-84.5	+75.0	-84.5	+75.0	-84.5	+75.0	-81.3
	G	+75.0	-83.2	+75.0	-80.1	+73.9	-73.9	+73.9	-73.9	+73.9	-73.9	+73.9	-73.9	+73.9	-73.9	+71.4	-71.4	+67.0	-67.0
74"	A,E,I	+51.3	-51.3	+49.4	-49.4	+45.0	-45.0	+45.0	-45.0	+45.0	-45.0	+45.0	-45.0	+44.2	-44.2	+39.1	-39.1	+37.1	-37.1
	C	+51.3	-51.3	+49.4	-49.4	+45.0	-45.0	+45.0	-45.0	+45.0	-45.0	+45.0	-45.0	+45.0	-45.0	+45.0	-45.0	+45.0	-45.0
	B,D,F,H,J	+75.0	-91.3	+75.0	-87.8	+75.0	-80.1	+75.0	-80.0	+75.0	-80.0	+75.0	-80.0	+75.0	-80.0	+75.0	-80.0	+75.0	-80.0
	G	+75.0	-79.9	+75.0	-76.8	+70.1	-70.1	+70.0	-70.0	+70.0	-70.0	+70.0	-70.0	+70.0	-70.0	+70.0	-70.0	+66.7	-66.7

GLASS TYPES:

TEST REPORT: FTL-4857

A. 3/16" ANNEALED
B. 3/16" TEMPERED
C. 1/4" ANNEALED
D. 1/4" TEMPERED
E. 13/16" I.G., 1/8"A, 9/16" AIR SPACE, 1/8"A
F. 13/16" I.G., 1/8"T, 9/16" AIR SPACE, 1/8"T
G. 13/16" I.G., 3/16"A, 7/16" AIR SPACE, 3/16"A
H. 13/16" I.G., 3/16"T, 7/16" AIR SPACE, 3/16"T
I. 13/16" I.G., 3/16"A, 1/2" AIR SPACE, 1/8"A
J. 13/16" I.G., 3/16"T, 1/2" AIR SPACE, 1/8"T

Approved as complying with the Florida Building Code
Date 07/27/06
NOA# 06-0322.04
Miami Dade Product Control Division
By

Revsd By:	Date:	Revisions:	
Revsd By:	Date:	Revisions:	
Revsd By: F.K.	Date: 5/12/06	Revisions: A	ADD AIR SPACE DIM. TO GLASS TYPES E - J.
Drawn By: F.K.	Date: 2/27/06	Checked By: J.J.	Date: 3/22/06

1070 TECHNOLOGY DRIVE
NOKOMIS, FL 34275

P.O. BOX 1529
NOKOMIS, FL 34274

PGT
Visibly Better

Description: DESIGN PRESSURES, OX AND XO WINDOWS

Title: ALUM. HORIZONTAL ROLLER WINDOW, NON-IMPACT

Series/Model:	Scale:	Sheet:	Drawing No.	Rev:
HR610	NTS	4 of 12	4127-20	A

6/13/06

Robert L. Clark, P.E.
PE #39712
Structural

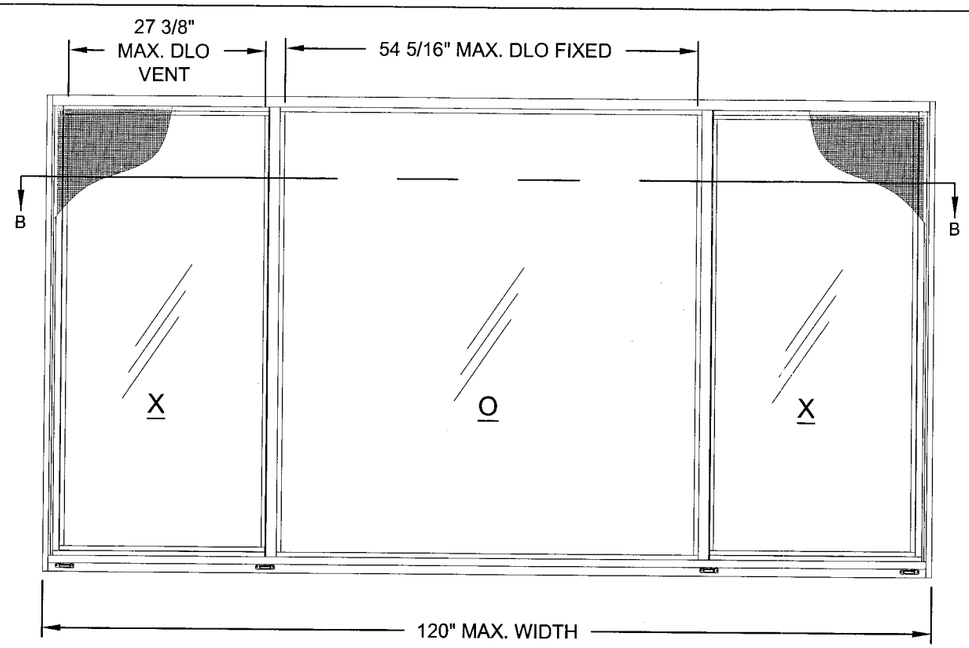

DETAIL B - XOX (1/4-1/2-1/4)

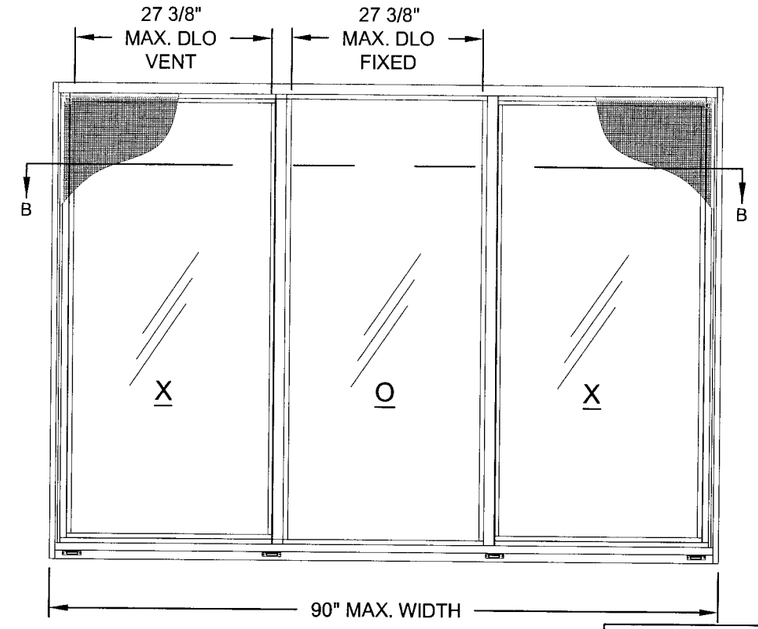

DETAIL C - XOX (1/3-1/3-1/3)

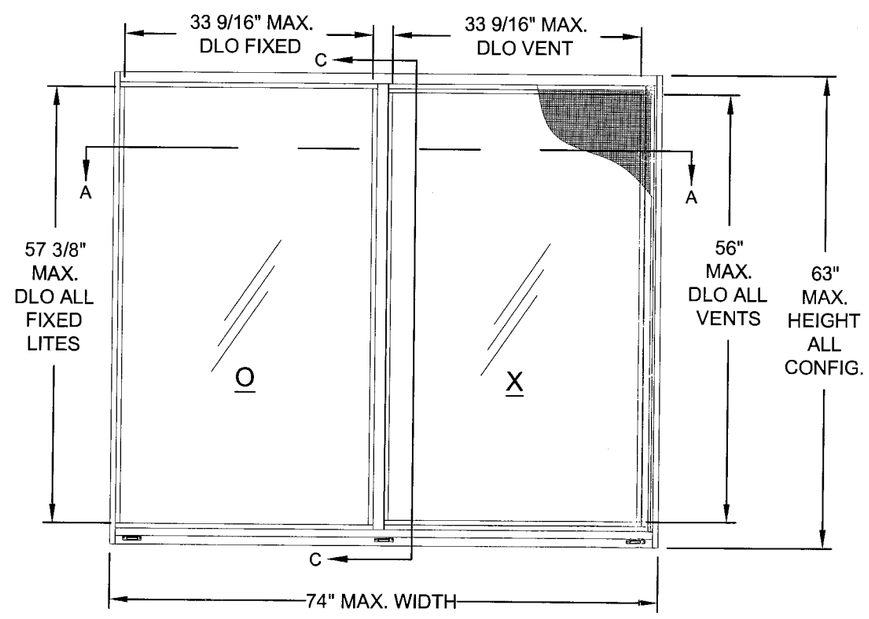

DETAIL A - OX OR XO

NOTE:

1. SEE SHEET 6 FOR VERTICAL AND HORIZONTAL SECTION DETAILS.

Approved as complying with the Florida Building Code
Date 07/27/06
NOA# 06-0327.04
Miami Dade Product Control Division
By

6/13/06
Robert L. Clark, P.E.
PE #39712
Structural

Revsd By:	Date:	Revisions:	
Revsd By:	Date:	Revisions:	
Revsd By: F.K.	Date: 5/12/06	Revisions: A	NO CHANGE THIS SHEET
Drawn By: F.K.	Date: 2/27/06	Checked By: J.J.	Date: 3/22/06

1070 TECHNOLOGY DRIVE
NOKOMIS, FL 34275

P.O. BOX 1529
NOKOMIS, FL 34274

PGT
Visibly Better

Description: ELEVATIONS

Title: ALUM. HORIZONTAL ROLLER WINDOW, NON-IMPACT

Series/Model:	Scale:	Sheet:	Drawing No.	Rev:
HR610	NTS	5 of 12	4127-20	A

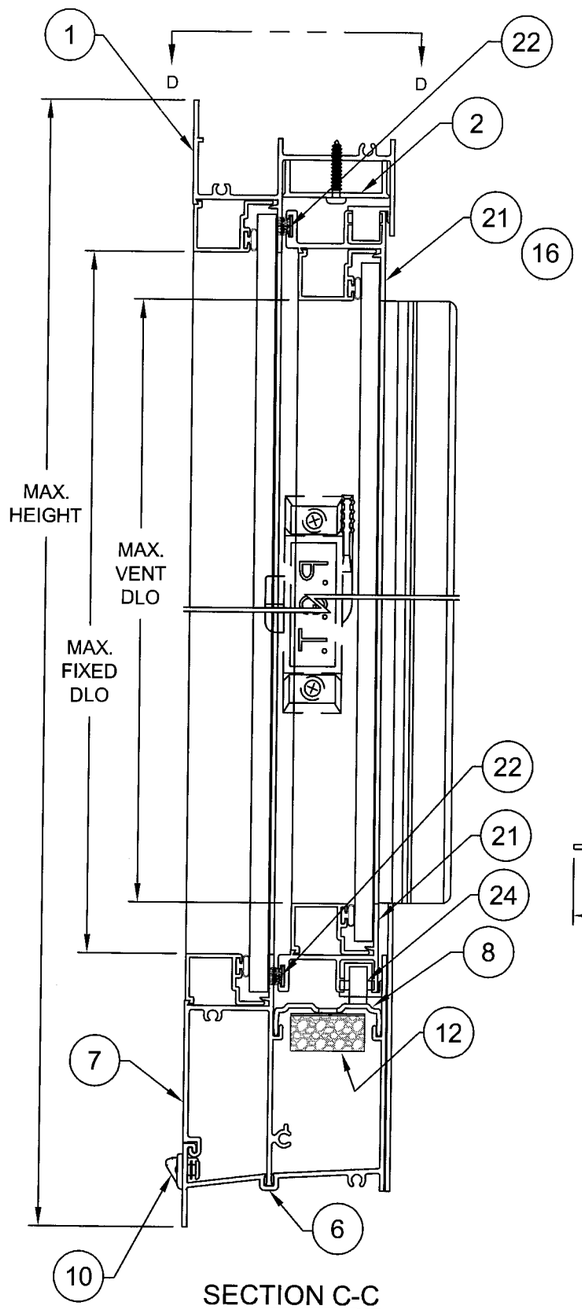

SECTION C-C
(VERTICAL SECTION)

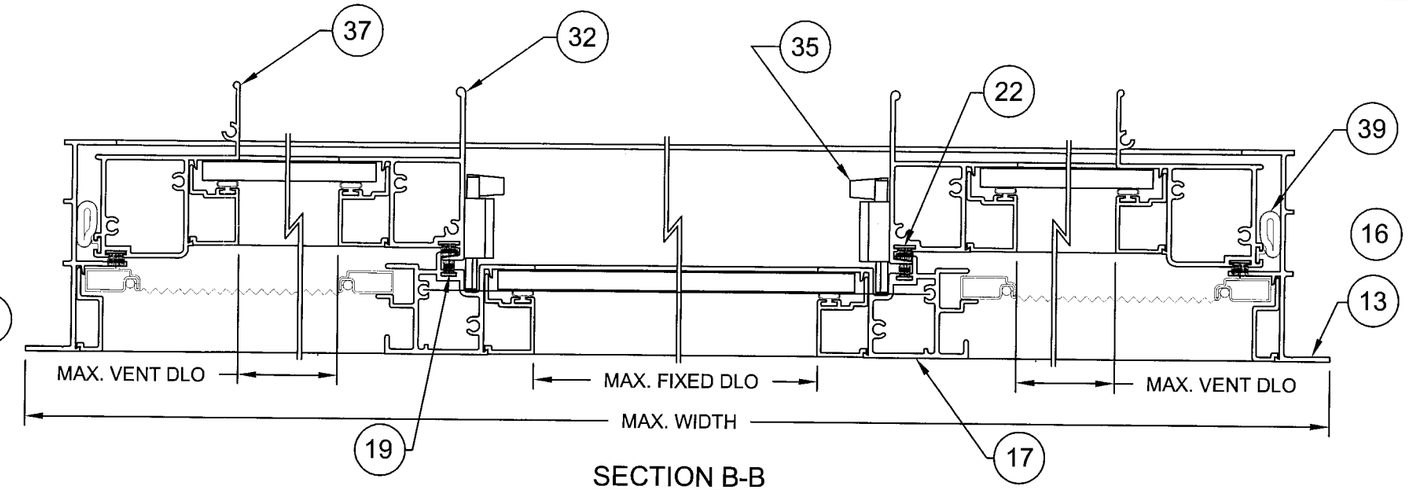

SECTION B-B
(HORIZONTAL SECTION - XOX)

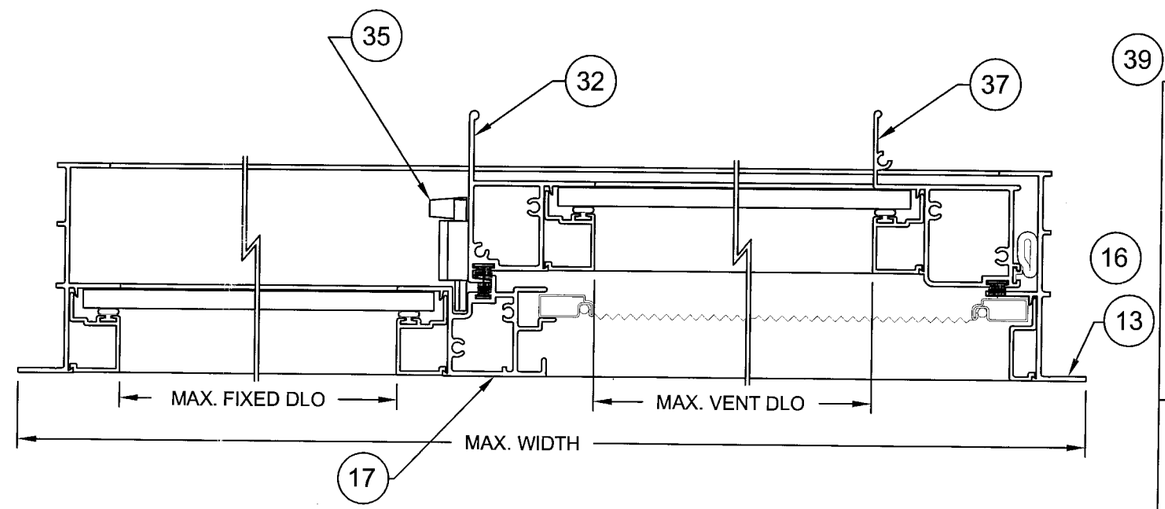

SECTION A-A
(HORIZONTAL SECTION - OX)

39 OPTIONAL

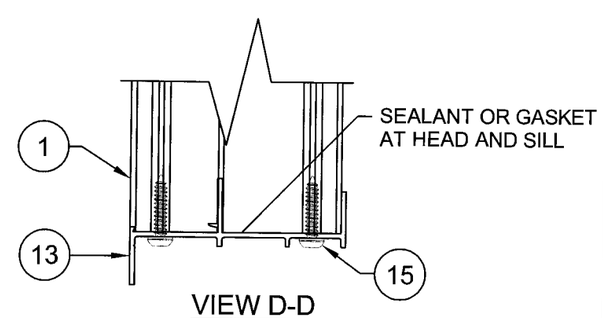

VIEW D-D
(FRAME CORNER CONSTRUCTION)

Approved as complying with the Florida Building Code
Date 07/23/06
NOA# 06-0322.04
Miami-Dade Product Control Division
By

6/13/06
Robert L. Clark, P.E.
PE #39712
Structural

Revsd By:	Date:	Revisions:	
Revsd By:	Date:	Revisions:	
Revsd By: F.K.	Date: 5/12/06	Revisions: A	NO CHANGE THIS SHEET
Drawn By: F.K.	Date: 2/27/06	Checked By: J.J.	Date: 3/22/06

1070 TECHNOLOGY DRIVE
NOKOMIS, FL 34275

P.O. BOX 1529
NOKOMIS, FL 34274

PGT
Visibly Better

Description: SECTIONS

Title: ALUM. HORIZONTAL ROLLER WINDOW, NON-IMPACT

Series/Model:	Scale:	Sheet:	Drawing No.	Rev:
HR610	Half	6 of 12	4127-20	A

ITEM	DWG#	REV	DESCRIPTION	MAT'L	PGT#
1	4102	A	FLANGE FRAME HEAD	6063-T6 AL	612237
2	4025		SASH STOP (STD.) (ANTI LIFT CLIP)	6063-T5 AL	612244
3			#8 X 3/4 PH. PAN HEAD		7834AA
4	4053		SASH STOP COVER (SASH STOP)	6063-T5 AL	
6	4136		FLANGE FRAME SILL	6063-T6 AL	64136
7	4137		SILL ADAPTOR	6063-T6 AL	64137
8	4131		ROLLER TRACK	6063-T6 AL	64131
10	71298		WEEP HOLE COVER	POLYPROP.	71298
12	1626		ADHESIVE OPEN CELL FOAM PAD		7PAD1626
13	4002	A	FLANGE FRAME JAMB	6063-T6 AL	612225
14	4134		GASKET FOR MAIN FRAME SILL JOINT		74134W/K
15	1155		#8 X 1.000 QUAD PN. SMS		781PQA
16	4110	G	SCREEN ADAPTOR	6063-T5 AL	64110G
17	4054	B	FIXED MEETING RAIL	6063HD-T6 AL	64054A
19	4066		WSTP.,.187 X .230, FIN SEAL		64066G
21	4105		SASH TOP AND BOTTOM RAIL	6063-T5 AL	612240
22	1683		WSTP.,.250 X .270 BACK, FIN SEAL		61683G
23	225-1		ROLLER HOUSING & GUIDE		42112HD
24	226		BRASS ROLLER WHEELS	BRASS	7BRWHL2
29	4128		HORIZONTAL ROLLER SASH TOP GUIDE	POLYPROP.	44128N
32	4006	D	SASH MEETING RAIL	6063HS-T6 AL	64006
33	1235		WSTP.,.170 X .270 BACK, FIN SEAL		67S16G
35	1096		SWEEP LATCH	DIE-CAST	71096
36	1016		#8 X .625 PH. FL. SMS		7858
37	4126		SASH SIDE RAIL	6063-T5 AL	64126
39	7070		BULB WEATHERSTRIP .187 X .275		67070K
40			LIFT RAIL COVER CAP		74078"C" L OR R
50			GLAZING SILICONE, DOW 899, 995 OR EQUIVALENT		
51	1224		VINYL GLAZING BEAD BULB (THICK)		6TP247W,K
52	1225		VINYL GLAZING BEAD BULB (THIN)		6TP248K
57	4014	B	GLAZING BEAD - 3/16" & 1/4"		64014
58	4046	A	GLAZING BEAD - 3/16" & 1/4" W/ GRILL KI	6063-T5 AL	644842
59	4067		GLAZING BEAD - 13/16"	6063-T5 AL	64067
80	GLASS,	3/16" ANNEALED			
81	"	3/16" TEMPERED			
82	"	1/4" ANNEALED			
83	"	1/4" TEMPERED			

ITEM	DWG#	REV	DESCRIPTION	MAT'L	PGT#
84	GLASS,	13/16" IG (1/8" ANNEALED, 9/16" AIR SPACE, 1/8" ANNEALED)			
85	"	13/16" IG (1/8" TEMPERED, 9/16" AIR SPACE, 1/8" TEMPERED)			
86	"	13/16" IG (3/16" ANNEALED, 7/16" AIR SPACE, 3/16" ANNEALED)			
87	"	13/16" IG (3/16" TEMPERED, 7/16" AIR SPACE, 3/16" TEMPERED)			
88	"	13/16" IG (3/16" ANNEALED, 1/2" AIR SPACE, 1/8" ANNEALED)			
89	"	13/16" IG (3/16" TEMPERED, 1/2" AIR SPACE, 1/8" TEMPERED)			
90	1014		SCREEN FRAME (HOR. & VER.)	3105-H14 AL	61014
91	1630		SCREEN CORNER KEY W/RINGS	POLYPROP.	71630
92	1631		SCREEN CORNER KEY W/OUT RINGS	POLYPROP.	71631
93	1073		SCREEN SPRING	ST.ST.	7CASP
94	1624		SCREEN SPLINE - .135 DIA. FOAM	EM PVC	61624K
95	1635		SCREEN SPLINE - .135 DIA. HARD	EM PVC	61635K
96			SCREEN	CLOTH	61816

Approved as complying with the Florida Building Code
Date 07/27/06
NOA# 06-0322.04
Miami-Dade Product Control Division
By

Revsd By:	Date:	Revisions:	
Revsd By:	Date:	Revisions:	
Revsd By: F.K.	Date: 5/12/06	Revisions: A	ADD AIR SPACE DIM. TO ITEMS 84-89.
Drawn By: F.K.	Date: 2/27/06	Checked By: J.J.	Date: 3/22/06

1070 TECHNOLOGY DRIVE
NOKOMIS, FL 34275

P.O. BOX 1529
NOKOMIS, FL 34274

PGT
Visibly Better

Description: PARTS LIST

Title: ALUM. HORIZONTAL ROLLER WINDOW, NON-IMPACT

Series/Model:	Scale:	Sheet:	Drawing No.	Rev:
HR610	NTS	7 of 12	4127-20	A

6/13/06

Robert L. Clark, P.E.
PE #39712
Structural

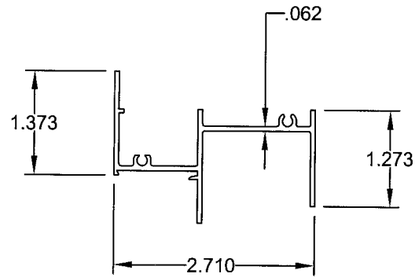

1 FLANGE FRAME HEAD
#4102A, 6063-T6

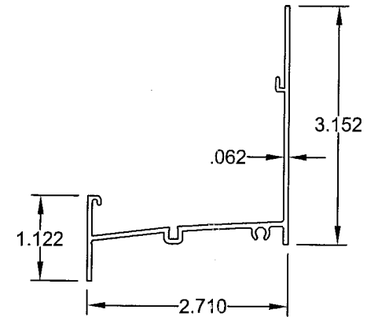

6 FLANGE FRAME SILL
#4136, 6063-T6

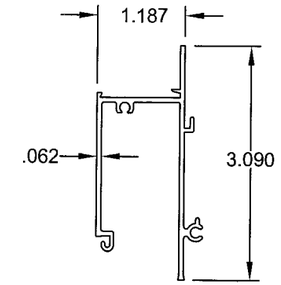

7 FRAME SILL ADAPTER
#4137, 6063-T6

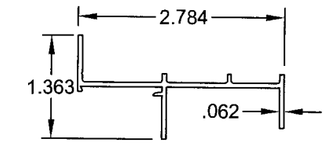

13 FLANGE FRAME JAMB
#4002A, 6063-T6

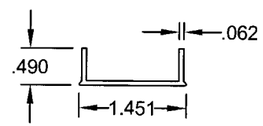

2 SASH STOP
#4025, 6063-T5

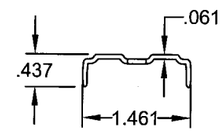

8 ROLLER TRACK
#4131, 6063-T6

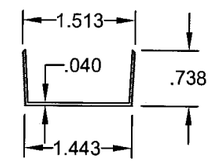

4 SASH STOP COVER
#4053, 6063-T5

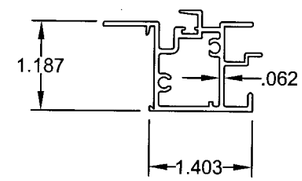

17 FIXED MEETING RAIL
#4054B, 6063HD-T6

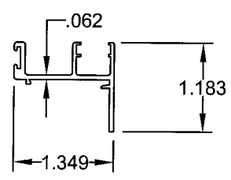

21 SASH TOP & BOTTOM RAIL
#4105, 6063-T5

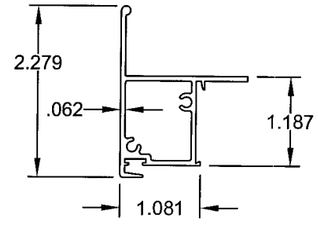

32 SASH MTG. RAIL
#4006D, 6063HS-T6

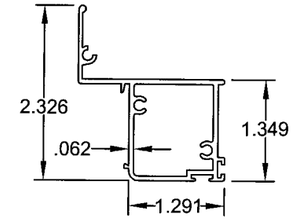

37 SASH SIDE RAIL
#4126, 6063-T5

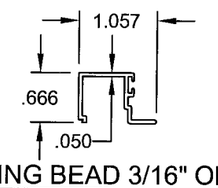

57 GLAZING BEAD 3/16" OR 1/4"
#4014B, 6063-T5

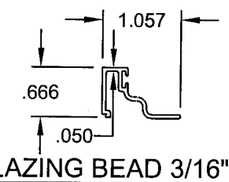

58 GLAZING BEAD 3/16" OR 1/4"
#4046A, 6063-T5
(USED W/ GRILL KIT)

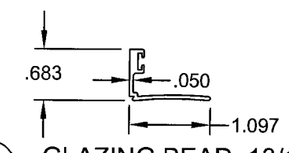

59 GLAZING BEAD, 13/16"
#4067, 6063-T5

Approved as complying with the Florida Building Code
Date 07/23/06
NOA# 06-0322.04
Miami-Dade Product Control Division
By

6/13/06
Robert L. Clark, P.E.
PE #39712
Structural

Revsd By:	Date:	Revisions:	
Revsd By:	Date:	Revisions:	
Revsd By: F.K.	Date: 5/12/06	Revisions: A	NO CHANGE THIS SHEET
Drawn By: F.K.	Date: 2/27/06	Checked By: J.J.	Date: 3/22/06

1070 TECHNOLOGY DRIVE
NOKOMIS, FL 34275

P.O. BOX 1529
NOKOMIS, FL 34274

PGT
Visibly Better

Description: EXTRUSIONS

Title: ALUM. HORIZONTAL ROLLER WINDOW, NON-IMPACT

Series/Model:	Scale:	Sheet:	Drawing No.	Rev:
HR610	Half	8 of 12	4127-20	A

MIAMI-DADE COUNTY ANCHORAGE FOR XOX (1/4-1/2-1/4) WINDOWS - TABLE 4.

GLASS TYPE >	A, C, E, I				B, D, F, H, J				G			
ANCHOR TYPE & SUBSTRATE >	3, WOOD		1,2, WOOD/CONC		3, WOOD		1,2, WOOD/CONC		3, WOOD		1,2, WOOD/CONC	
WINDOW SIZE	ZONES		ZONES		ZONES		ZONES		ZONES		ZONES	
W x H	HEAD & SILL	JAMBS	HEAD & SILL	JAMBS	HEAD & SILL	JAMBS	HEAD & SILL	JAMBS	HEAD & SILL	JAMBS	HEAD & SILL	JAMBS
53.125 x 26.000	C4	2	B3	2	C4	2	B3	2	C4	2	B3	2
36.000	C4	2	B3	2	C4	2	B3	2	C4	2	B3	2
38.375	C4	2	B3	2	D5	2	C4	2	D5	2	C4	2
48.000	C4	3	B3	3	E6	3	C4	3	D5	3	C4	3
50.625	C4	3	B3	3	E6	3	C4	3	D5	3	C4	3
54.000	C4	3	B3	3	F7	3	D5	3	D5	3	C4	3
60.000	C4	3	B3	3	E6	3	C4	3	D5	3	B3	3
63.000	C4	3	B3	3	E6	3	C4	3	D5	3	B3	3
60.000 x 26.000	C4	2	B3	2	C4	2	B3	2	C4	2	B3	2
36.000	C4	2	B3	2	D5	2	C4	2	D5	2	C4	2
38.375	C4	2	B3	2	D5	2	C4	2	D5	2	C4	2
48.000	C4	3	B3	3	F7	3	D5	3	D5	3	C4	3
50.625	C4	3	B3	3	F7	3	D5	3	D5	3	C4	3
54.000	C4	3	B3	3	F7	3	D5	3	D5	3	C4	3
60.000	C4	3	B3	3	F7	3	D5	3	D5	3	B3	3
63.000	C4	3	B3	3	F7	3	C4	3	D5	3	B3	3
74.000 x 26.000	C4	2	B3	2	D5	2	C4	2	D5	2	C4	2
36.000	C4	2	B3	2	E6	2	C4	2	D5	2	C4	2
38.375	C4	2	B3	2	F7	3	D5	2	D5	2	C4	2
48.000	C4	3	B3	3	F7	3	D5	3	D5	3	C4	3
50.625	C4	3	B3	3	F7	3	D5	3	D5	3	C4	3
54.000	C4	3	B3	3	F7	3	D5	3	D5	3	C4	3
60.000	C4	3	B3	3	F7	3	D5	3	D5	3	C4	3
63.000	C4	3	B3	3	F7	3	D5	3	D5	3	C4	3
84.000 x 26.000	C4	2	B3	2	D5	2	C4	2	C4	2	B3	2
36.000	C4	2	B3	2	F7	3	D5	2	D5	2	C4	2
38.375	C4	2	B3	2	NA	NA	D5	3	D5	2	C4	2
48.000	C4	3	B3	3	NA	NA	E6	3	D5	3	C4	3
50.625	C4	3	B3	3	NA	NA	E6	3	D5	3	C4	3
54.000	C4	3	B3	3	NA	NA	D5	3	D5	3	C4	3
60.000	C4	3	B3	3	F7	3	D5	3	D5	3	C4	3
63.000	C4	3	B3	3	F7	3	D5	3	D5	3	C4	3
106.375 x 26.000	B3	2	A2	2	D5	2	C4	2	C4	2	B3	2
36.000	C4	2	B3	2	E6	2	C4	2	D5	2	C4	2
38.375	C4	2	B3	2	E6	2	D5	2	D5	2	C4	2
48.000	C4	3	B3	3	NA	NA	D5	3	E6	3	C4	3
50.625	C4	3	B3	3	NA	NA	D5	3	E6	3	C4	3
54.000	C4	3	B3	3	NA	NA	E6	3	E6	3	C4	3
60.000	C4	3	B3	3	NA	NA	E6	3	E6	3	C4	3
63.000	C4	3	B3	3	NA	NA	E6	3	E6	3	C4	3
120.000 x 26.000	B3	2	A2	2	D5	2	B3	2	B3	2	B3	2
36.000	B3	2	B3	2	D5	2	C4	2	C4	2	B3	2
38.375	C4	2	B3	2	E6	2	C4	2	C4	2	B3	2
48.000	C4	3	B3	3	F7	3	D5	3	D5	3	C4	3
50.625	C4	3	B3	3	F7	3	D5	3	D5	3	C4	3
54.000	C4	3	B3	3	NA	NA	D5	3	E6	3	C4	3
60.000	C4	3	B3	3	NA	NA	E6	3	E6	3	C4	3
63.000	C4	3	B3	3	NA	NA	E6	3	E6	3	C4	3

1. ANCHOR TYPES:
   1 - 1/4" ELCO TAPCONS
   2 - 1/4" ELCO SS4 CRETE-FLEX
   3 - #12 SCREWS

TABLE KEY: D5 | 3 — ANCHOR QTY. PER JAMB; D5 — MTG. RAIL CLUSTER, HEAD & SILL; NA — NOT AVAILABLE

2. GLASS TYPES:
   A. 3/16" ANNEALED GLASS
   B. 3/16" TEMPERED GLASS
   C. 1/4" ANNEALED GLASS
   D. 1/4" TEMPERED GLASS
   A E. 13/16" I.G., 1/8" ANNEALED, 9/16" AIR SPACE, 1/8" ANNEALED
   F. 13/16" I.G., 1/8" TEMPERED, 9/16" AIR SPACE, 1/8" TEMPERED
   G. 13/16" I.G., 3/16" ANNEALED, 7/16" AIR SPACE, 3/16" ANNEALED
   H. 13/16" I.G., 3/16" TEMPERED, 7/16" AIR SPACE, 3/16" TEMPERED
   I. 13/16" I.G., 3/16" ANNEALED, 1/2" AIR SPACE, 1/8" ANNEALED
   J. 13/16" I.G., 3/16" TEMPERED, 1/2" AIR SPACE, 1/8" TEMPERED

3. ANCHOR LOCATIONS ARE BASED ON THE FOLLOWING TESTED DIMENSIONS AT FULL DP:
   HEAD & SILL: 10 1/2" MAX. ON EACH SIDE OF MEETING RAIL CENTERLINE.
   JAMBS: 9" MAX. FROM CORNERS AND 22 1/2" MAX. O.C.

4. INSTALL XOX (1/4-1/2-1/4) WINDOWS IN MIAMI-DADE COUNTY PER ADJACENT TABLE. FOR WINDOW SIZES NOT SHOWN, GO TO NEXT LARGER WINDOW IN TABLE.

5. FOR WINDOWS INSTALLED OUTSIDE OF MIAMI-DADE COUNTY WITH ANY OF THE APPROVED GLASS TYPES TO THEIR RESPECTIVE FULL DESIGN PRESSURE AND WITH EITHER OF THE ANCHOR TYPES, SPACE ANCHORS PER NOTE 3.

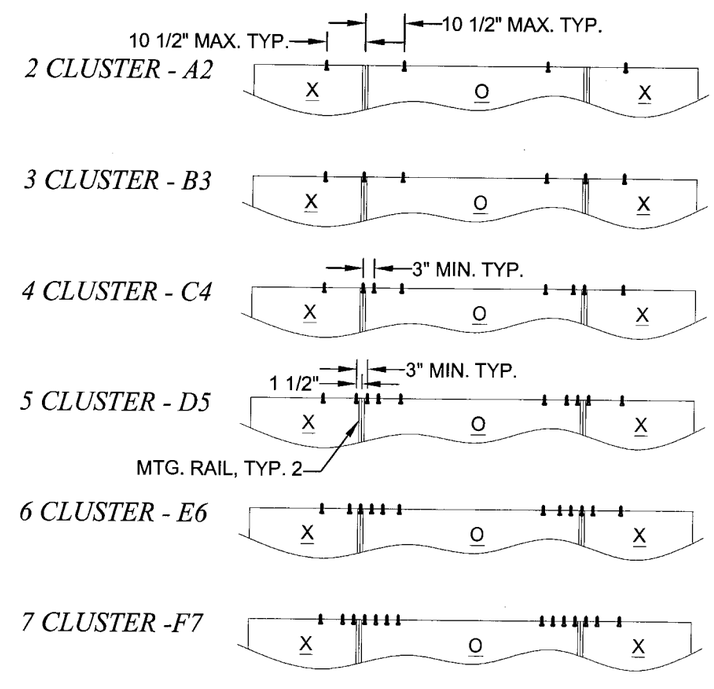

HEAD AND SILL MTG. RAIL ANCHOR CLUSTERS

Approved as complying with the Florida Building Code
Date 07/27/06
NOA# 06-0327.04
Miami-Dade Product Control Division
By

Revsd By:	Date:	Revisions:	
Revsd By:	Date:	Revisions:	
Revsd By: F.K.	Date: 5/12/06	Revisions: A	ADD AIR SPACE DIMENSIONS GLASS TYPES E THRU J.
Drawn By: F.K.	Date: 2/27/06	Checked By: J.J.	Date: 3/22/06

1070 TECHNOLOGY DRIVE
NOKOMIS, FL 34275

P.O. BOX 1529
NOKOMIS, FL 34274

PGT
Visibly Better

Description: ANCHORAGE SPACING, XOX (1/4-1/2-1/4)

Title: ALUM. HORIZONTAL ROLLER WINDOW, NON-IMPACT

Series/Model:	Scale:	Sheet:	Drawing No.	Rev:
HR610	NTS	9 of 12	4127-20	A

6/13/06
Robert L. Clark, P.E.
PE #39712
Structural

MIAMI-DADE COUNTY ANCHORAGE FOR XOX (1/3-1/3-1/3) WINDOWS - TABLE 5.

GLASS TYPE >	A, C, E, I				B, D, F, H, J				G			
ANCHOR TYPE & SUBSTRATE >	3, WOOD		1,2, WOOD/CONC		3, WOOD		1,2, WOOD/CONC		3, WOOD		1,2, WOOD/CONC	
WINDOW SIZE	ZONES		ZONES		ZONES		ZONES		ZONES		ZONES	
W x H	HEAD & SILL	JAMBS	HEAD & SILL	JAMBS	HEAD & SILL	JAMBS	HEAD & SILL	JAMBS	HEAD & SILL	JAMBS	HEAD & SILL	JAMBS
48.000 x 26.000	B3	2	A2	2	B3	2	A2	2	B3	2	A2	2
36.000	G4	2	B3	2	G4	2	B3	2	G4	2	B3	2
38.375	B3	2	B3	2	G4	2	B3	2	G4	2	B3	2
48.000	B3	3	A2	3	H5	3	G4	3	G4	3	B3	3
50.625	B3	3	A2	3	H5	3	G4	3	G4	3	B3	3
60.000	B3	3	A2	3	H5	3	G4	3	G4	3	B3	3
63.000	B3	3	A2	3	H5	3	G4	3	G4	3	B3	3
53.125 x 26.000	B3	2	A2	2	G4	2	B3	2	G4	2	B3	2
36.000	G4	2	B3	2	H5	2	B3	2	H5	2	B3	2
38.375	G4	2	B3	2	H5	2	B3	2	H5	2	B3	2
48.000	B3	3	A2	3	J6	3	G4	3	G4	3	B3	3
50.625	B3	3	A2	3	J6	3	G4	3	G4	3	B3	3
60.000	B3	3	A2	3	H5	3	G4	3	G4	3	B3	3
63.000	B3	3	A2	3	H5	3	G4	3	G4	3	B3	3
60.000 x 26.000	B3	2	A2	2	G4	2	B3	2	G4	2	B3	2
36.000	B3	2	A2	2	H5	2	G4	2	G4	2	B3	2
38.375	B3	2	B3	2	H5	3	G4	2	H5	2	B3	2
48.000	B3	3	B3	3	J6	3	G4	3	H5	3	B3	3
50.625	B3	3	B3	3	J6	3	G4	3	G4	3	B3	3
60.000	B3	3	A2	3	J6	3	G4	3	G4	3	B3	3
63.000	B3	3	A2	3	J6	3	G4	3	G4	3	B3	3
66.000 x 26.000	B3	2	A2	2	G4	2	B3	2	B3	2	A2	2
36.000	B3	2	A2	2	H5	2	G4	2	G4	2	B3	2
38.375	B3	2	A2	2	H5	3	G4	2	G4	2	B3	2
48.000	G4	3	B3	3	J6	3	H5	3	H5	3	B3	3
50.625	G4	3	B3	3	J6	3	G4	3	H5	3	B3	3
60.000	B3	3	A2	3	J6	3	G4	3	G4	3	B3	3
63.000	B3	3	A2	3	J6	3	G4	3	G4	3	B3	3
74.000 x 26.000	A2	2	A2	2	G4	2	B3	2	B3	2	A2	2
36.000	B3	2	A2	2	H5	2	G4	2	G4	2	B3	2
38.375	B3	2	A2	2	H5	2	G4	2	G4	2	B3	2
48.000	B3	3	B3	3	J6	3	G4	3	H5	3	B3	3
50.625	G4	3	B3	3	J6	3	H5	3	H5	3	B3	3
60.000	B3	3	B3	3	J6	3	G4	3	H5	3	B3	3
63.000	B3	3	A2	3	J6	3	G4	3	G4	3	B3	3
84.000 x 26.000	A2	2	A2	2	G4	2	B3	2	B3	2	A2	2
36.000	B3	2	A2	2	G4	2	B3	2	B3	2	B3	2
38.375	B3	2	A2	2	H5	2	B3	2	G4	2	B3	2
48.000	B3	3	A2	3	H5	3	G4	3	G4	3	B3	3
50.625	B3	3	A2	3	J6	3	G4	3	G4	3	B3	3
60.000	G4	3	B3	3	J6	3	H5	3	H5	3	B3	3
63.000	G4	3	B3	3	J6	3	G4	3	H5	3	B3	3
90.000 x 26.000	A2	2	A2	2	G4	2	B3	2	B3	2	A2	2
36.000	B3	2	A2	2	G4	2	B3	2	B3	2	A2	2
38.375	B3	2	A2	2	G4	2	B3	2	B3	2	B3	2
48.000	B3	3	A2	3	H5	3	G4	3	G4	3	B3	3
50.625	B3	3	A2	3	H5	3	G4	3	G4	3	B3	3
60.000	G4	3	B3	3	J6	3	G4	3	H5	3	B3	3
63.000	G4	3	B3	3	J6	3	H5	3	H5	3	B3	3

1. ANCHOR TYPES:
   1 - 1/4" ELCO TAPCONS
   2 - 1/4" ELCO SS4 CRETE-FLEX
   3 - #12 SCREWS

TABLE KEY: B3 | 3 — ANCHOR QTY. PER JAMB
B3 — MTG. RAIL CLUSTER, HEAD & SILL
NA — NOT AVAILABLE

2. GLASS TYPES:
   A. 3/16" ANNEALED GLASS
   B. 3/16" TEMPERED GLASS
   C. 1/4" ANNEALED GLASS
   D. 1/4" TEMPERED GLASS
   △A E. 13/16" I.G., 1/8" ANNEALED, 9/16" AIR SPACE, 1/8" ANNEALED
   F. 13/16" I.G., 1/8" TEMPERED, 9/16" AIR SPACE, 1/8" TEMPERED
   G. 13/16" I.G., 3/16" ANNEALED, 7/16" AIR SPACE, 3/16" ANNEALED
   H. 13/16" I.G., 3/16" TEMPERED, 7/16" AIR SPACE, 3/16" TEMPERED
   I. 13/16" I.G., 3/16" ANNEALED, 1/2" AIR SPACE, 1/8" ANNEALED
   J. 13/16" I.G., 3/16" TEMPERED, 1/2" AIR SPACE, 1/8" TEMPERED

3. ANCHOR LOCATIONS ARE BASED ON THE FOLLOWING TESTED DIMENSIONS AT FULL DP:
   HEAD & SILL: 10 1/2" MAX. ON EACH SIDE OF MEETING RAIL CENTERLINE.
   JAMBS: 9" MAX. FROM CORNERS AND 22 1/2" MAX. O.C.

4. INSTALL XOX (1/3-1/3-1/3) WINDOWS IN MIAMI-DADE COUNTY PER ADJACENT TABLE. FOR WINDOW SIZES NOT SHOWN, GO TO NEXT LARGER WINDOW IN TABLE.

5. FOR WINDOWS INSTALLED OUTSIDE OF MIAMI-DADE COUNTY WITH ANY OF THE APPROVED GLASS TYPES TO THEIR RESPECTIVE FULL DESIGN PRESSURE AND WITH EITHER OF THE ANCHOR TYPES,SPACE ANCHORS PER NOTE 3.

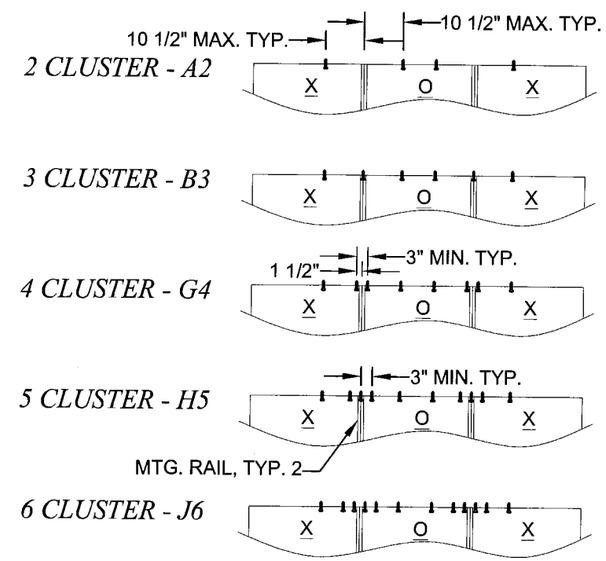

HEAD AND SILL MTG. RAIL ANCHOR CLUSTERS

Approved as complying with the Florida Building Code
Date 07/27/06
NOA# 06-0322.04
Miami Dade Product Control Division
By

6/13/06

Robert L. Clark, P.E.
PE #39712
Structural

Revsd By:	Date:	Revisions:	
Revsd By:	Date:	Revisions:	
Revsd By: F.K.	Date: 5/12/06	Revisions: A	ADD AIR SPACE DIMENSIONS GLASS TYPES E THRU J.
Drawn By: F.K.	Date: 2/27/06	Checked By: J.J.	Date: 3/22/06

1070 TECHNOLOGY DRIVE
NOKOMIS, FL 34275

P.O. BOX 1529
NOKOMIS, FL 34274

PGT Visibly Better

Description: ANCHORAGE SPACING, XOX (1/3-1/3-1/3)

Title: ALUM. HORIZONTAL ROLLER WINDOW, NON-IMPACT

Series/Model:	Scale:	Sheet:	Drawing No.	Rev:
HR610	NTS	10 of 12	4127-20	A

MIAMI-DADE COUNTY ANCHORAGE FOR XO AND OX WINDOWS - TABLE 6.

GLASS TYPE >	A, C, E, I				B, D, F, H, J				G			
ANCHOR TYPE & SUBSTRATE >	3, WOOD		1,2, WOOD/CONC		3, WOOD		1,2, WOOD/CONC		3, WOOD		1,2, WOOD/CONC	
WINDOW SIZE V W x H	ZONES		ZONES		ZONES		ZONES		ZONES		ZONES	
	HEAD & SILL	JAMBS	HEAD & SILL	JAMBS	HEAD & SILL	JAMBS	HEAD & SILL	JAMBS	HEAD & SILL	JAMBS	HEAD & SILL	JAMBS
26.500 x 26.000	B3	2	A2	2	B3	2	A2	2	B3	2	A2	2
36.000	B3	2	A2	2	B3	2	A2	2	B3	2	A2	2
38.375	G4	2	B3	2	G4	2	B3	2	G4	2	B3	2
48.000	G4	3	B3	3	G4	3	B3	3	G4	3	B3	3
50.625	G4	3	B3	3	G4	3	B3	3	G4	3	B3	3
54.000	G4	3	B3	3	H5	3	B3	3	H5	3	B3	3
60.000	G4	3	B3	3	H5	3	G4	3	H5	3	G4	3
63.000	G4	3	B3	3	H5	3	G4	3	H5	3	G4	3
37.000 x 26.000	G4	2	B3	2	G4	2	B3	2	G4	2	B3	2
36.000	H5	2	B3	2	H5	2	B3	2	H5	2	B3	2
38.375	H5	2	B3	2	H5	3	G4	2	H5	3	G4	2
48.000	G4	3	B3	3	J6	3	G4	3	J6	3	G4	3
50.625	G4	3	B3	3	J6	3	G4	3	J6	3	G4	3
54.000	G4	3	B3	3	J6	4	H5	3	J6	3	G4	3
60.000	G4	3	B3	3	K7	4	H5	4	J6	3	G4	3
63.000	G4	3	B3	3	J6	4	H5	4	J6	3	G4	3
48.000 x 26.000	G4	2	B3	2	H5	2	G4	2	H5	2	G4	2
36.000	H5	2	B3	2	J6	3	H5	3	J6	3	H5	3
38.375	H5	2	G4	2	K7	3	H5	3	K7	3	H5	3
48.000	H5	3	B3	3	L8	4	J6	4	K7	3	H5	3
50.625	H5	3	B3	3	L8	4	H5	4	K7	3	H5	3
54.000	G4	3	B3	3	K7	4	H5	4	K7	3	H5	3
60.000	G4	3	B3	3	K7	4	H5	4	J6	3	H5	3
63.000	G4	3	B3	3	K7	4	H5	4	J6	3	G4	3
53.125 x 26.000	G4	2	B3	2	J6	2	G4	2	H5	2	G4	2
36.000	G4	2	B3	2	K7	3	H5	3	J6	3	H5	2
38.375	H5	2	B3	2	K7	3	H5	3	K7	3	H5	3
48.000	H5	3	G4	3	L8	4	J6	4	K7	3	H5	3
50.625	H5	3	B3	3	L8	4	J6	4	K7	3	H5	3
54.000	H5	3	B3	3	L8	4	J6	4	J6	3	H5	3
60.000	G4	3	B3	3	K7	4	H5	4	K7	3	H5	3
63.000	G4	3	B3	3	K7	4	H5	4	J6	3	H5	3
60.000 x 26.000	B3	2	A2	2	J6	2	G4	2	H5	2	G4	2
36.000	G4	2	B3	2	K7	2	H5	2	J6	2	G4	2
38.375	G4	2	B3	2	K7	3	H5	2	J6	2	G4	2
48.000	H5	3	G4	3	L8	4	J6	3	K7	3	H5	3
50.625	H5	3	G4	3	NA	NA	J6	4	K7	3	H5	3
54.000	H5	3	G4	3	L8	4	J6	4	K7	3	H5	3
60.000	H5	3	B3	3	L8	4	J6	4	J6	3	H5	3
63.000	H5	3	B3	3	L8	4	H5	4	J6	3	H5	3
66.000 x 26.000	B3	2	A2	2	H5	2	G4	2	H5	2	B3	2
36.000	G4	2	B3	2	J6	2	H5	2	J6	2	G4	2
38.375	G4	2	B3	2	K7	2	H5	2	J6	2	G4	2
48.000	H5	3	B3	3	L8	3	H5	3	K7	3	H5	3
50.625	H5	3	B3	3	L8	3	J6	3	K7	3	H5	3
54.000	H5	3	G4	3	L8	4	J6	3	K7	3	H5	3
60.000	H5	3	G4	3	L8	4	J6	4	K7	3	H5	3
63.000	H5	3	B3	3	L8	4	J6	4	K7	3	H5	3
74.000 x 26.000	B3	2	A2	2	H5	2	G4	2	H5	2	B3	2
36.000	G4	2	B3	2	J6	2	G4	2	H5	2	G4	2
38.375	G4	2	B3	2	J6	2	G4	2	H5	2	G4	2
48.000	G4	3	B3	3	K7	3	H5	3	J6	3	H5	3
50.625	G4	3	B3	3	K7	3	H5	3	K7	3	H5	3
54.000	H5	3	B3	3	L8	3	J6	3	K7	3	H5	3
60.000	H5	3	G4	3	L8	4	J6	3	K7	3	H5	3
63.000	H5	3	G4	3	NA	NA	J6	4	K7	3	H5	3

1. ANCHOR TYPES:
   1 - 1/4" ELCO TAPCONS
   2 - 1/4" ELCO SS4 CRETE-FLEX
   3 - #12 SCREWS

TABLE KEY: B3 | 3 ← ANCHOR QTY. PER JAMB
B3 → MTG. RAIL CLUSTER, HEAD & SILL
NA — NOT AVAILABLE

2. GLASS TYPES:
   A. 3/16" ANNEALED GLASS
   B. 3/16" TEMPERED GLASS
   C. 1/4" ANNEALED GLASS
   D. 1/4" TEMPERED GLASS
   A E. 13/16" I.G., 1/8" ANNEALED, 9/16" AIR SPACE, 1/8" ANNEALED
   F. 13/16" I.G., 1/8" TEMPERED, 9/16" AIR SPACE, 1/8" TEMPERED
   G. 13/16" I.G., 3/16" ANNEALED, 7/16" AIR SPACE, 3/16" ANNEALED
   H. 13/16" I.G., 3/16" TEMPERED, 7/16" AIR SPACE, 3/16" TEMPERED
   I. 13/16" I.G., 3/16" ANNEALED, 1/2" AIR SPACE, 1/8" ANNEALED
   J. 13/16" I.G., 3/16" TEMPERED, 1/2" AIR SPACE, 1/8" TEMPERED

3. ANCHOR LOCATIONS ARE BASED ON THE FOLLOWING TESTED DIMENSIONS AT FULL DP:
   HEAD & SILL: 10 1/2" MAX. ON EACH SIDE OF MEETING RAIL CENTERLINE.
   JAMBS: 9" MAX. FROM CORNERS AND 22 1/2" MAX. O.C.

4. INSTALL XO AND OX WINDOWS IN MIAMI-DADE COUNTY PER ADJACENT TABLE. FOR WINDOW SIZES NOT SHOWN, GO TO NEXT LARGER WINDOW IN TABLE.

5. FOR WINDOWS INSTALLED OUTSIDE OF MIAMI-DADE COUNTY WITH ANY OF THE APPROVED GLASS TYPES TO THEIR RESPECTIVE FULL DESIGN PRESSURE AND WITH EITHER OF THE ANCHOR TYPES, SPACE ANCHORS PER NOTE 3.

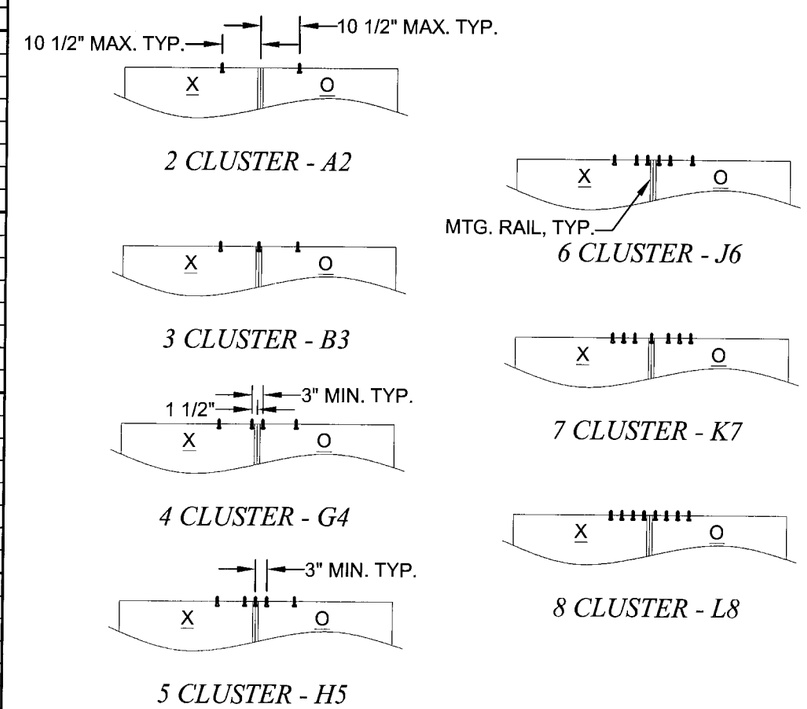

HEAD AND SILL MTG. RAIL ANCHOR CLUSTERS

Approved as complying with the Florida Building Code
Date 07/27/06
NOA# 06-0327.04
Miami-Dade Product Control Division
By

6/13/06
Robert L. Clark, P.E.
PE #39712
Structural

Revsd By:	Date:	Revisions:	
Revsd By:	Date:	Revisions:	
Revsd By: F.K.	Date: 5/12/06	Revisions: A	ADD AIR SPACE DIMENSIONS GLASS TYPES E THRU J.
Drawn By: F.K.	Date: 2/27/06	Checked By: J.J.	Date: 3/22/06

1070 TECHNOLOGY DRIVE
NOKOMIS, FL 34275
P.O. BOX 1529
NOKOMIS, FL 34274

PGT Visibly Better

Description: ANCHORAGE SPACING, XO AND OX WINDOWS
Title: ALUM. HORIZONTAL ROLLER WINDOW, NON-IMPACT

Series/Model:	Scale:	Sheet:	Drawing No.	Rev:
HR610	NTS	11 of 12	4127-20	A

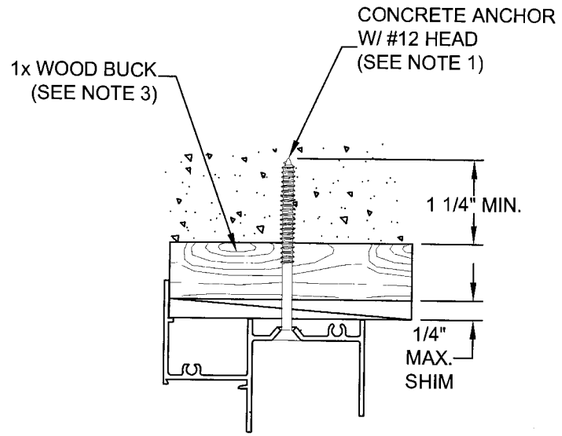

DETAIL A

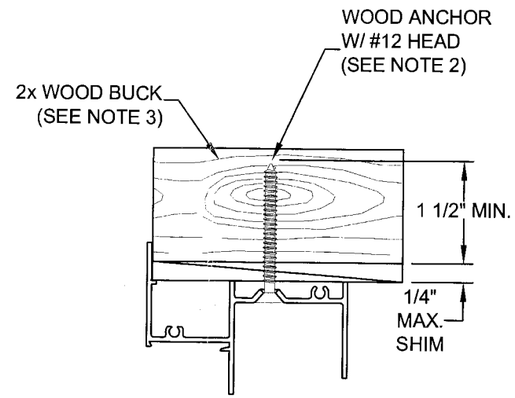

DETAIL B

TYPICAL HEAD SECTIONS

EXTERIOR INTERIOR
(HEAD & SILL DETAILS)

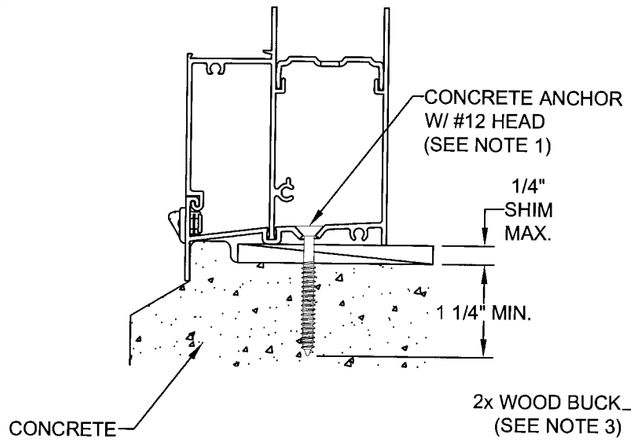

DETAIL C

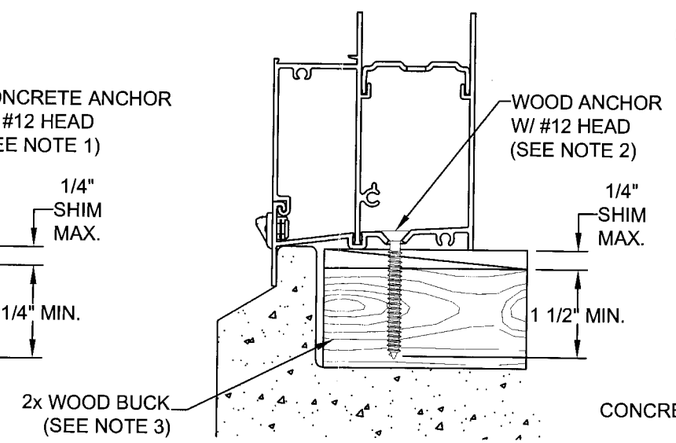

DETAIL D

TYPICAL SILL SECTIONS

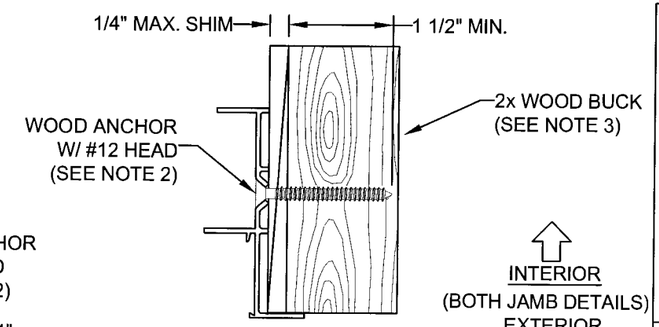

DETAIL E

INTERIOR
(BOTH JAMB DETAILS)
EXTERIOR

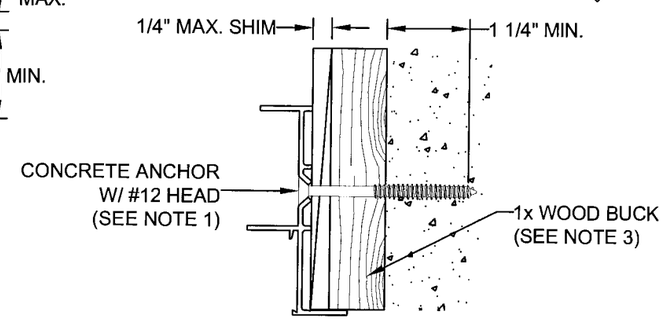

DETAIL F

TYPICAL JAMB SECTIONS

NOTES:

1. FOR CONCRETE APPLICATIONS IN MIAMI-DADE COUNTY, USE ONLY MIAMI-DADE COUNTY APPROVED 1/4" ELCO TAPCONS OR 1/4" SS4 CRETE-FLEX. MINIMUM DISTANCE FROM ANCHOR TO CONCRETE EDGE IS 2 1/2".
2. FOR WOOD APPLICATIONS IN MIAMI-DADE COUNTY, USE #12 SCREWS, 1/4" TAPCONS OR 1/4" SS4 CRETE-FLEX.
3. WOOD BUCKS DEPICTED IN THE SECTIONS ON THIS PAGE AS 1x ARE BUCKS WHOSE TOTAL THICKNESS IS LESS THAN 1 1/2". 1x WOOD BUCKS ARE OPTIONAL IF UNIT CAN BE INSTALLED DIRECTLY TO SOLID CONCRETE. WOOD BUCKS DEPICTED AS 2x ARE 1 1/2" THICK OR GREATER. INSTALLATION TO THE SUBSTRATE OF WOOD BUCKS TO BE ENGINEERED BY OTHERS OR AS APPROVED BY AUTHORITY HAVING JURISDICTION.
4. FOR ATTACHMENT TO ALUMINUM: THE MATERIAL SHALL BE A MINIMUM STRENGTH OF 6063-T5 AND A MINIMUM OF 1/8" THICK. THE ALUMINUM STRUCTURAL MEMBER SHALL BE OF A SIZE TO PROVIDE FULL SUPPORT TO THE WINDOW FRAME SIMILAR TO THAT SHOWN IN THESE DETAILS FOR 2x WOOD BUCKS. THE ANCHOR SHALL BE A #12 SHEET METAL SCREW WITH FULL ENGAGEMENT INTO THE ALUMINUM. IF THESE CRITERIA ARE MET, THE RESPECTIVE DESIGN PRESSURES AND ANCHORAGE SPACING FOR TAPCONS MAY BE USED.
5. (A) MATERIALS, INCLUDING BUT NOT LIMITED TO STEEL SCREWS, THAT COME INTO CONTACT WITH OTHER DISSIMILAR MATERIALS SHALL MEET THE REQUIREMENTS OF FBC 2004, SECTION 2003.8.4 (SUPPLEMENT 2005).

Approved as complying with the Florida Building Code
Date 07/27/06
NOA# 06-0322.04
Miami-Dade Product Control Division
By

10/13/06

Robert L. Clark, P.E.
PE #39712
Structural

Revsd By:	Date:	Revisions:	
Revsd By:	Date:	Revisions:	
Revsd By: F.K.	Date: 5/12/06	Revisions: A	ADD NOTE 5.
Drawn By: F.K.	Date: 2/27/06	Checked By: J.J.	Date: 3/22/06

1070 TECHNOLOGY DRIVE
NOKOMIS, FL 34275

P.O. BOX 1529
NOKOMIS, FL 34274

PGT
Visibly Better

Description: ANCHORAGE DETAILS

Title: ALUM. HORIZONTAL ROLLER WINDOW, NON-IMPACT

Series/Model:	Scale:	Sheet:	Drawing No.	Rev:
HR610	Half	12 of 12	4127-20	A