MIAMI-DADE COUNTY, FLORIDA
METRO-DADE FLAGLER BUILDING
140 WEST FLAGLER STREET, SUITE 1603
MIAMI, FLORIDA 33130-1563
(305) 375-2901 FAX (305) 375-2908
www.buldingcodeonline.com

BUILDING CODE COMPLIANCE OFFICE (BCCO)
PRODUCT CONTROL DIVISION

NOTICE OF ACCEPTANCE (NOA)

Sunshine Windows Manufacturing, Inc.
1745 W 33rd Place
Hialeah, FL 33012

SCOPE:

This NOA is being issued under the applicable rules and regulations governing the use of construction materials. The documentation submitted has been reviewed by Miami-Dade County Product Control Division and accepted by the Board of Rules and Appeals (BORA) to be used in Miami Dade County and other areas where allowed by the Authority Having Jurisdiction (AHJ).

This NOA shall not be valid after the expiration date stated below. The Miami-Dade County Product Control Division (In Miami Dade County) and/or the AHJ (in areas other than Miami Dade County) reserve the right to have this product or material tested for quality assurance purposes. If this product or material fails to perform in the accepted manner, the manufacturer will incur the expense of such testing and the AHJ may immediately revoke, modify, or suspend the use of such product or material within their jurisdiction. BORA reserves the right to revoke this acceptance, if it is determined by Miami-Dade County Product Control Division that this product or material fails to meet the requirements of the applicable building code.

This product is approved as described herein, and has been designed to comply with the Florida Building Code, including the High Velocity Hurricane Zone.

DESCRIPTION: Series 4250 Circle Top Aluminum Fixed Window

APPROVAL DOCUMENT: Drawing No. **PW-00-02**, titled "Series 4250 Aluminum Circle Top Fixed Window", sheets 1 through 8 of 8, dated 09/30/05, prepared by manufacturer, signed and sealed by Francisco Hernandez, P.E., bearing the Miami-Dade County Product Control Revision stamp with the Notice of Acceptance number and expiration date by the Miami-Dade County Product Control Division.

MISSILE IMPACT RATING: None

LABELING: Each unit shall bear a permanent label with the manufacturer's name or logo, city, state and following statement: "Miami-Dade County Product Control Approved", unless otherwise noted herein.

RENEWAL of this NOA shall be considered after a renewal application has been filed and there has been no change in the applicable building code negatively affecting the performance of this product.

TERMINATION of this NOA will occur after the expiration date or if there has been a revision or change in the materials, use, and/or manufacture of the product or process. Misuse of this NOA as an endorsement of any product, for sales, advertising or any other purposes shall automatically terminate this NOA. Failure to comply with any section of this NOA shall be cause for termination and removal of NOA.

ADVERTISEMENT: The NOA number preceded by the words Miami-Dade County, Florida, and followed by the expiration date may be displayed in advertising literature. If any portion of the NOA is displayed, then it shall be done in its entirety.

INSPECTION: A copy of this entire NOA shall be provided to the user by the manufacturer or its distributors and shall be available for inspection at the job site at the request of the Building Official.

This NOA **revises and renews NOA # 05-1013.10** and consists of this page 1 and evidence pages E-1 and E-2, as well as approval document mentioned above.

The submitted documentation was reviewed by **Manuel Perez, P.E.**

PRODUCT CONTROL ACCEPTED

Sunshine Windows Manufacturing, Inc.

NOTICE OF ACCEPTANCE: EVIDENCE SUBMITTED

A. DRAWINGS

1. Manufacturer's die drawings and sections.
2. Drawing No **PW-00-02**, Sheets 1 through 8 of 8, titled "Series 4250 Aluminum Circle Top Fixed Window", dated 09/30/05, prepared by manufacturer, signed and sealed by Francisco Hernandez, P.E.

B. TESTS

1. Test reports on: 1) Air Infiltration Test, per FBC, TAS 202-94
   2) Uniform Static Air Pressure Test, Loading per FBC TAS 202-94
   3) Water Resistance Test, per FBC, TAS 202-94

   along with marked-up drawings and installation diagram of a rectangular and arch top aluminum fixed window, glazed with 1/8" ann. glass, prepared by Fenestration Testing Laboratory, Inc., Test Report No. **FTL-4660**, dated 07/15/05, signed and sealed by Edmundo Largaespada, P.E.
2. Test reports on: 1) Air Infiltration Test, per FBC, TAS 202-94
   2) Uniform Static Air Pressure Test, Loading per FBC TAS 202-94
   3) Water Resistance Test, per FBC, TAS 202-94

   along with marked-up drawings and installation diagram of a rectangular and arch top aluminum fixed window, glazed with 3/16" ann. glass, prepared by Fenestration Testing Laboratory, Inc., Test Report No. **FTL-4659**, dated 07/27/05, signed and sealed by Edmundo Largaespada, P.E.
3. Test reports on: 1) Air Infiltration Test, per FBC, TAS 202-94
   2) Uniform Static Air Pressure Test, Loading per FBC TAS 202-94
   3) Water Resistance Test, per FBC, TAS 202-94

   along with marked-up drawings and installation diagram of a rectangular, arch top and eyebrow aluminum fixed window, glazed with 3/16" temp. glass, prepared by Fenestration Testing Laboratory, Inc., Test Report No. **FTL-4661**, dated 07/28/05, signed and sealed by Edmundo Largaespada, P.E.
4. Test reports on: 1) Air Infiltration Test, per FBC, TAS 202-94
   2) Uniform Static Air Pressure Test, Loading per FBC TAS 202-94
   3) Water Resistance Test, per FBC, TAS 202-94

   along with marked-up drawings and installation diagram of an arch aluminum fixed window, glazed with 3/16" temp. glass, prepared by Fenestration Testing Laboratory, Inc., Test Report No. **FTL-4851**, dated 02/09/06, signed and sealed by Edmundo Largaespada, P.E.

C. CALCULATIONS

1. Anchor Calculations and structural analysis, complying with FBC-2004, dated 10/15/05 and 11/9/06, prepared, signed and sealed by Francisco Hernandez, P.E.
   Complies with ASTM E1300-02

Manuel Perez, P.E.
Product Control Examiner
NOA No 06-0328.02
Expiration Date: October 15, 2011
Approval Date: December 14, 2006

NOTICE OF ACCEPTANCE: EVIDENCE SUBMITTED

D. QUALITY ASSURANCE

1. Miami Dade Building Code Compliance Office (BCCO).

E. MATERIAL CERTIFICATIONS

1. None.

F. STATEMENTS

1. Statement letter of conformance, dated November 9, 2006, signed and sealed by Francisco Hernandez, P.E.
2. Statement letter of no financial interest, dated November 9, 2006, signed and sealed by Francisco Hernandez, P.E.

G. OTHER

1. Notice of Acceptance No. **05-1013.10**, issued to Sunshine Windows Manufacturing, Inc. for their Series 4250 Circle Top Aluminum Fixed Window, approved on 11/03/05 and expiring on 10/15/06.

Manuel Perez, P.E.
Product Control Examiner
NOA No 06-0328.02
Expiration Date: October 15, 2011
Approval Date: December 14, 2006

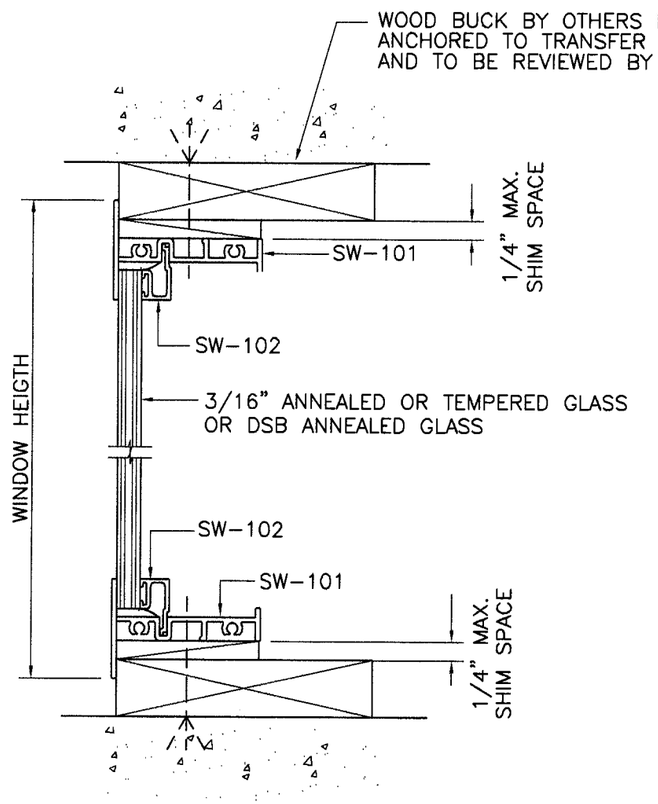

SECTION A - A

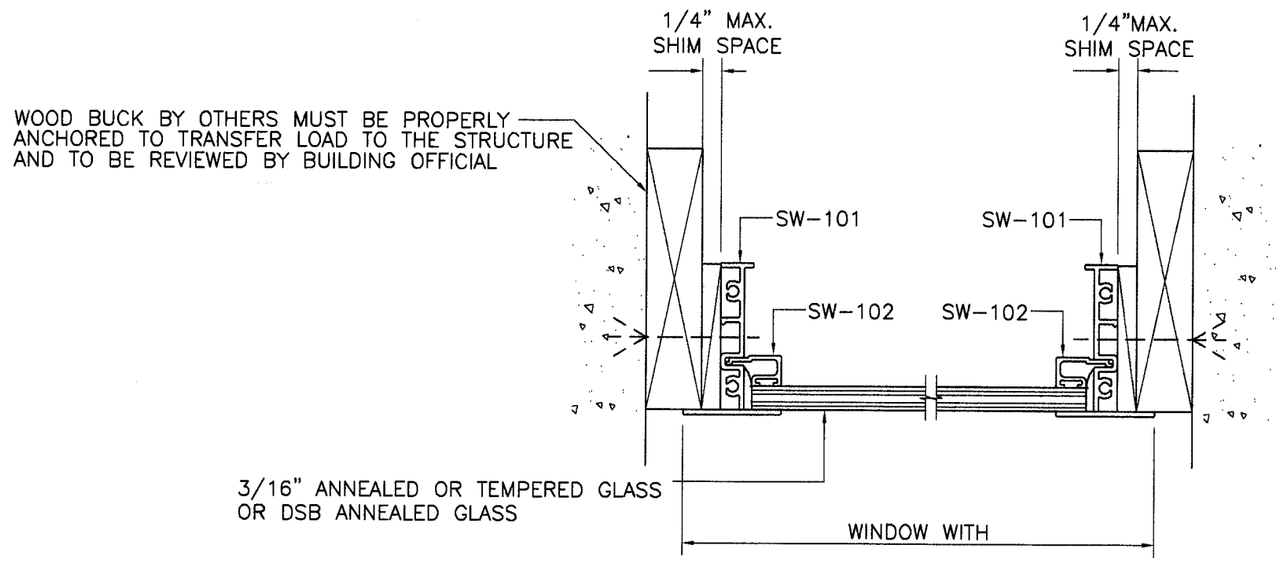

SECTION B - B

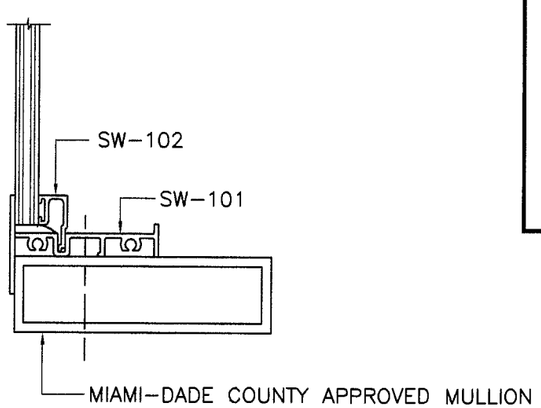

CONNECTION TO ALUMINUM MULL

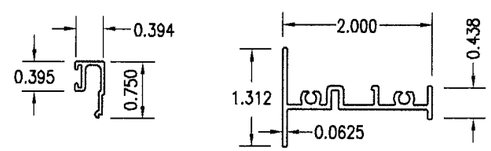

PART No. SW-102
GLAZING BEAD
6063-T6

PART No. SW-101
FRAME
6063-T6

PRODUCT REVISED
as complying with the Florida Building Code
Acceptance No. 06-0328.02
Expiration Date OCT 15, 2011
By: Manuel Perez
Miami-Dade Product Control Division

9-30-05
FRANCISCO HERNANDEZ
FLORIDA PE # 51393

Sunshine Windows Manufacturing, Inc.
1745 W. 33rd Place
Hialeah, Florida 33012
Ph: (305)364-9952
Fax:(305)828-5118

FRANCISCO HERNANDEZ P. E.
Structural Engineering
351 NW 82nd AVE #1118
Miami, Florida 33126
Phone (305) 264 7919
Fax (305) 266 3427

SERIES 4250 ALUMINUM
CIRCLE TOP FIXED WINDOW

Drawn By: MH
Date: 9-30-05
Scale: 1/2"=1"
Revision:
Revision:

DRAWING No:
PW-00-02

SHEET
1 OF 8

DESIGN PRESSURE CHART - PSF

WINDOW SIZE W X H INCHES	3/16" TEMPERED GLASS	
	POS.	NEG.
120 X 40	62.67	70.04
120 X 37	62.67	74.60
120 X 26	62.67	100.70
120 X 19	62.67	133.44
108 X 46	62.67	64.48
108 X 40	62.67	71.63
108 X 37	62.67	76.14
108 X 26	62.67	102.08
108 X 19	62.67	134.72
96 X 48	62.67	64.85
96 X 46	62.67	66.74
96 X 40	62.67	73.72
96 X 37	62.67	78.16
96 X 26	62.67	103.86
96 X 19	62.67	136.37
91 X 50	62.67	64.38
91 X 46	62.67	67.92
91 X 40	62.67	74.81
91 X 37	62.67	79.20
91 X 26	62.67	104.76
91 X 19	62.67	137.20
84 X 54	62.67	63.71
84 X 50	62.67	66.48
84 X 42	62.67	74.11
84 X 40	62.67	76.60
84 X 37	62.67	80.92
84 X 26	62.67	106.23
84 X 19	62.67	138.54
78 X 40	79.45	79.45
78 X 37	83.72	83.72
78 X 26	94.67	109.07
78 X 19	94.67	141.62
74 X 40	85.33	85.33
74 X 37	89.76	89.76
74 X 26	94.67	116.22
74 X 19	94.67	150.40
63 X 40	93.77	93.77
63 X 31.50	94.67	108.36
63 X 26	94.67	124.06

DESIGN PRESSURE CHART - PSF

WINDOW SIZE W X H INCHES	3/16" TEMPERED GLASS	
	POS.	NEG.
63 X 19	94.67	158.66
53 X 46	94.67	100.17
53 X 40	94.67	104.73
53 X 37	94.67	108.30
53 X 26.50	94.67	131.24
53 X 19	94.67	167.26
46 X 40	94.67	110.77
46 X 37	94.67	113.22
46 X 26	94.67	134.27
46 X 19	94.67	166.11
38 X 37	94.67	127.73
38 X 26	94.67	141.78
38 X 19	94.67	170.19
26 X 26	94.67	204.50
26.50 X 13.25	94.67	210.00

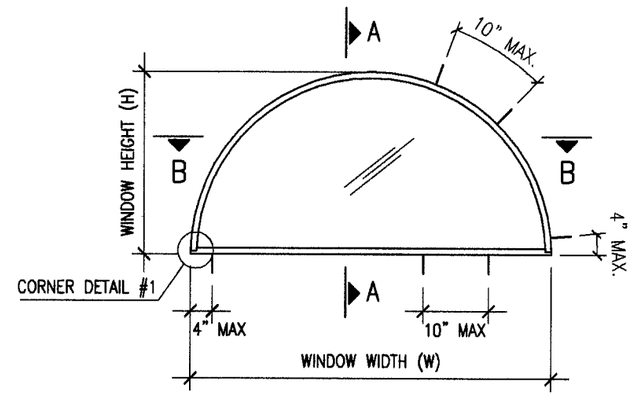

ARCH
TYPICAL ELEVATION

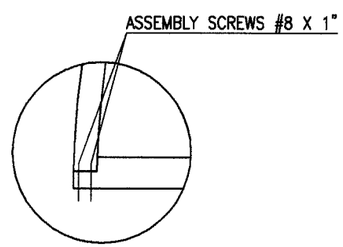

CORNER DETAIL #1

ANCHORS:

1. FOR CONNECTION TO CONCRETE BLOCK USE 1/4" ELCO TAPCON WITH 1 1/2" MINIMUM EMBEDMENT INTO WALL
2. FOR CONNECTION TO METAL STRUCTURE USE 1/4" -20 HILTI KWIK-FLEX SELF-DRILLING SCREW

   STEEL MATERIAL SHALL CONFORM TO ASTM A500, A653 OR A36 WITH 12 Ga MINIMUM WALL THICKNESS.
   ALUMINUM ALLOY 6063-T5 WITH 1/8" MINIMUM WALL THICKNESS.
3. FOR CONNECTION TO 2BY WOOD BUCK OR WOOD STRUCTURE USE 1/4"-20 HILTI KWIK-FLEX SELF-DRILLING SCREW WITH 1 1/2" MINIMUM EMBEDMENT INTO WOOD

WELDING:

FOR CORNER WELDED CONNECTIONS USE 1/8" FILLET WELD WITH 1 1/4" MINIMUN LENGTH MADE WITH ER4043 FILLER ALLOY

PRODUCT REVISED
as complying with the Florida
Building Code
Acceptance No. 06-0328.02
Expiration Date OCT 15, 2011
By Manuel Serra
Miami-Dade Product Control
Division

9-30-05
FRANCISCO HERNANDEZ
FLORIDA PE # 51393

Sunshine Windows Manufacturing, Inc.
1745 W. 33rd Place
Hialeah, Florida 33012
Ph: (305)364-9952
Fax:(305)828-5118

FRANCISCO HERNANDEZ P. E.
Structural Engineering
351 NW 82nd AVE #1118
Miami, Florida 33126
Phone (305) 264 7919
Fax (305) 266 3427

SERIES 4250 ALUMINUM
CIRCLE TOP FIXED WINDOW

Drawn By: MH
Date: 9-30-05
Scale: 3/8"=1'
Revision:
Revision:

DRAWING NO.
PW-00-02

DESIGN PRESSURE CHART - PSF

WINDOW SIZE W X H INCHES	3/16" ANNEALED GLASS		DSB ANNEALED GLASS	
	POS.	NEG.	POS.	NEG.
74 X 26	38.00	45.70	–	–
74 X 19	38.00	63.67	–	–
63 X 40	38.00	38.62	–	–
63 X 31.5	38.00	44.63	–	–
63 X 26	38.00	51.10	–	–
63 X 19	38.00	65.36	–	–
53 X 40	38.00	42.34	–	–
53 X 37	38.00	43.78	–	–
53 X 26.5	38.00	53.06	–	–
53 X 19	38.00	67.62	40.50	40.50
46 X 40	38.00	46.64	–	–
46 X 37	38.00	47.67	–	–
46 X 26	38.00	56.53	41.33	43.90
46 X 19	38.00	69.95	41.33	46.80
38 X 37	38.00	55.54	41.33	46.80
38 X 26	38.00	61.65	41.33	47.87
38 X 19	38.00	74.00	41.33	57.46
26 X 26	38.00	81.12	41.33	62.99
26.5 X 13.25	38.00	106.11	41.33	82.40

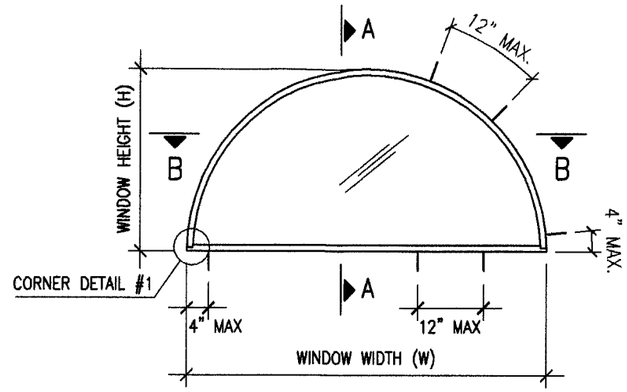

ARCH
TYPICAL ELEVATION

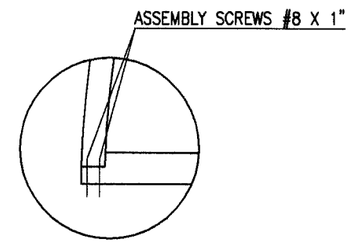

CORNER DETAIL #1

ANCHORS:

1. FOR CONNECTION TO CONCRETE BLOCK USE 1/4" ELCO TAPCON WITH 1 1/2" MINIMUM EMBEDMENT INTO WALL
2. FOR CONNECTION TO METAL STRUCTURE USE 1/4" –20 HILTI KWIK–FLEX SELF–DRILLING SCREW

   STEEL MATERIAL SHALL CONFORM TO ASTM A500, A653 OR A36 WITH 12 Ga MINIMUM WALL THICKNESS. ALUMINUM ALLOY 6063–T5 WITH 1/8" MINIMUM WALL THICKNESS.
3. FOR CONNECTION TO 2BY WOOD BUCK OR WOOD STRUCTURE USE 1/4"–20 HILTI KWIK–FLEX SELF–DRILLING SCREW WITH 1 1/2" MINIMUM EMBEDMENT INTO WOOD

WELDING:

FOR CORNER WELDED CONNECTIONS USE 1/8" FILLET WELD WITH 1 1/4" MINIMUN LENGTH MADE WITH ER4043 FILLER ALLOY

PRODUCT REVISED
as complying with the Florida
Building Code
Acceptance No. 06-0328.02
Expiration Date OCT. 15, 2011
By: Manuel Perez
Miami-Dade Product Control
Division

9-30-05
FRANCISCO HERNANDEZ
FLORIDA PE # 51393

Sunshine Windows Manufacturing, Inc.
1745 W. 33rd Place
Hialeah, Florida 33012
Ph: (305)364–9952
Fax:(305)828–5118

FRANCISCO HERNANDEZ P. E.
Structural Engineering
351 NW 82nd AVE #1118
Miami, Florida 33126
Phone (305) 264 7919
Fax (305) 266 3427

SERIES 4250 ALUMINUM
CIRCLE TOP FIXED WINDOW

Drawn By: MH
Date: 9–30–05
Scale: 3/8"=1'
Revision:
Revision:

DRAWING NO.
PW–00–02

SHEET
3 OF 8

DESIGN PRESSURE CHART - PSF

WINDOW SIZE W X H INCHES	3/16" ANNEALED GLASS		DSB ANNEALED GLASS	
	POS.	NEG.	POS.	NEG.
120 X 26	37.70	37.70	–	–
120 X 19	62.67	71.50	–	–
108 X 26	38.90	38.90	–	–
108 X 19	62.67	73.50	–	–
96 X 26	40.20	40.20	–	–
96 X 19	62.67	75.20	–	–
91 X 26	41.00	41.00	–	–
91 X 19	62.67	76.40	–	–
84 X 26	42.50	42.50	–	–
84 X 19	62.67	78.10	–	–
78 X 46	32.60	32.60	–	–
78 X 40	32.90	32.90	–	–
78 X 37	33.10	33.10	–	–
78 X 26	44.20	44.20	–	–
78 X 19	74.40	74.40	32.80	32.80
74 X 58	30.10	30.10	–	–
74 X 54	31.60	31.60	–	–
74 X 50	33.60	33.60	–	–
74 X 46	34.70	34.70	–	–
74 X 40	35.60	35.60	–	–
74 X 37	35.70	35.70	–	–
74 X 26	45.70	45.70	–	–
74 X 19	80.30	80.30	33.50	33.50
63 X 58	34.90	34.90	–	–
63 X 54	37.00	37.00	–	–
63 X 50	39.10	39.10	–	–
63 X 46	40.70	40.70	–	–
63 X 40	42.90	42.90	–	–
63 X 37	43.50	43.50	–	–
63 X 26	51.30	51.30	–	–
63 X 19	62.67	84.20	36.50	36.50
53 X 50	44.90	44.90	–	–
53 X 46	47.70	47.70	–	–
53 X 40	51.30	51.30	30.10	30.10
53 X 50	44.90	44.90	–	–
53 X 37	52.60	52.60	32.20	32.20
53 X 26	60.00	60.00	37.30	37.30
53 X 19	88.90	88.90	40.50	40.50
46 X 40	58.60	58.60	34.40	34.40
46 X 37	61.30	61.30	37.00	37.00

DESIGN PRESSURE CHART - PSF

WINDOW SIZE W X H INCHES	3/16" ANNEALED GLASS		DSB ANNEALED GLASS	
	POS.	NEG.	POS.	NEG.
46 X 26	71.30	71.30	44.50	44.50
46 X 19	94.30	94.30	46.80	46.80
38 X 37	73.10	73.10	43.30	43.30
38 X 26	85.40	85.40	55.40	55.40
38 X 19	94.67	116.00	58.60	58.60
26 X 26	94.67	130.00	76.60	76.60
26 X 19	94.67	166.00	89.10	89.10

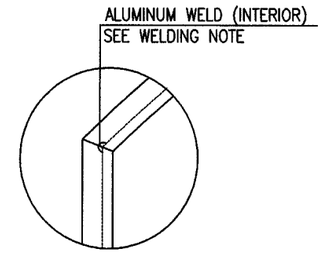

CORNER DETAIL #1

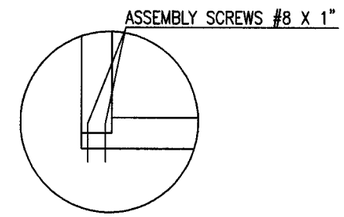

TYP 90° CORNER DETAIL

ANCHORS:

1. FOR CONNECTION TO CONCRETE BLOCK USE 1/4" ELCO TAPCON WITH 1 1/2" MINIMUM EMBEDMENT INTO WALL
2. FOR CONNECTION TO METAL STRUCTURE USE 1/4" –20 HILTI KWIK–FLEX SELF–DRILLING SCREW

   STEEL MATERIAL SHALL CONFORM TO ASTM A500, A653 OR A36 WITH 12 Ga MINIMUM WALL THICKNESS. ALUMINUM ALLOY 6063–T5 WITH 1/8" MINIMUM WALL THICKNESS.
3. FOR CONNECTION TO 2BY WOOD BUCK OR WOOD STRUCTURE USE 1/4"–20 HILTI KWIK–FLEX SELF–DRILLING SCREW WITH 1 1/2" MINIMUM EMBEDMENT INTO WOOD

WELDING:

FOR CORNER WELDED CONNECTIONS USE 1/8" FILLET WELD WITH 1 1/4" MINIMUN LENGTH MADE WITH ER4043 FILLER ALLOY

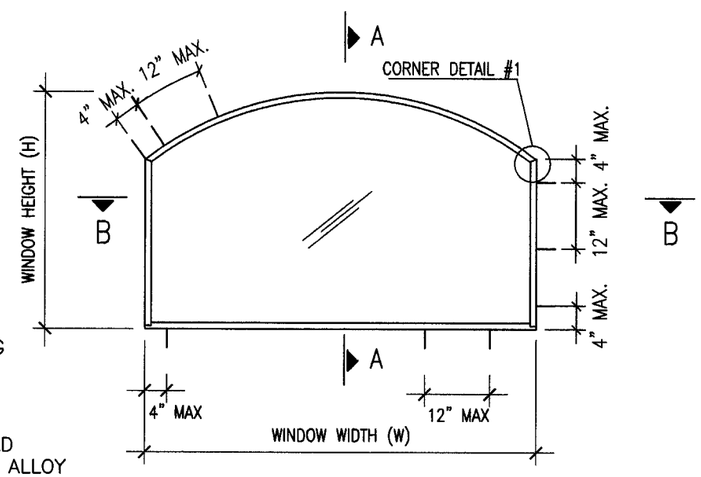

SIDEWAYS RECTANGLE WITH CIRCLE TOP
TYPICAL ELEVATION

PRODUCT REVIEWED
in complying with the Florida
Building Code
Application No. 06-0328.02
Expiration Date: Oct. 15, 2011
By: Manuel Perez
Manufactured Product Control
Inspector

9-30-05
FRANCISCO HERNANDEZ
FLORIDA PE # 51393

Sunshine Windows Manufacturing, Inc.
1745 W. 33rd Place
Hialeah, Florida 33012
Ph: (305)364–9952
Fax:(305)828–5118

FRANCISCO HERNANDEZ P. E.
Structural Engineering
351 NW 82nd AVE #1118
Miami, Florida 33126
Phone (305) 264 7919
Fax (305) 266 3427

SERIES 4250 ALUMINUM
CIRCLE TOP FIXED WINDOW

Drawn By: MH
Date: 9–30–05
Scale: 3/8"=1'
Revision:
Revision:

DRAWING NO.
PW–00–02

SHEET
4 OF 8

DESIGN PRESSURE CHART - PSF

WINDOW SIZE W X H INCHES	3/16" TEMPERED GLASS	
	POS.	NEG.
120 X 40	62.67	70.04
120 X 37	62.67	74.60
120 X 26	62.67	100.70
120 X 19	62.67	133.44
108 X 46	62.67	64.48
108 X 40	62.67	71.63
108 X 37	62.67	76.14
108 X 26	62.67	102.08
108 X 19	62.67	134.72
96 X 50	60.03	60.03
96 X 46	62.67	65.25
96 X 40	62.67	73.72
96 X 37	62.67	78.16
96 X 26	62.67	103.86
96 X 19	62.67	136.37
91 X 54	55.59	55.59
91 X 50	60.03	60.03
91 X 46	62.67	65.25
91 X 40	62.67	74.81
91 X 37	62.67	79.20
91 X 26	62.67	104.76
91 X 19	62.67	137.20
84 X 58	51.75	51.75
84 X 54	55.59	55.59
84 X 50	60.03	60.03
84 X 46	62.67	65.25
84 X 40	62.67	75.04
84 X 37	62.67	80.92
84 X 26	62.67	106.23
84 X 19	62.67	138.54
78 X 46	72.85	72.85
78 X 40	79.45	79.45
78 X 37	83.72	83.72
78 X 26	94.67	109.07
78 X 19	94.67	141.62

DESIGN PRESSURE CHART - PSF

WINDOW SIZE W X H INCHES	3/16" TEMPERED GLASS	
	POS.	NEG.
74 X 50	75.23	75.23
74 X 46	78.57	78.57
74 X 40	85.33	85.33
74 X 37	89.76	89.76
74 X 26	94.67	116.22
74 X 19	94.67	150.40
63 X 58	78.23	78.23
63 X 54	82.96	82.96
63 X 50	84.88	84.88
63 X 46	87.65	87.65
63 X 40	93.77	93.77
63 X 37	94.67	97.95
63 X 26	94.67	124.06
63 X 19	94.67	158.66
53 X 50	90.75	90.75
53 X 46	94.67	98.64
53 X 40	94.67	104.73
53 X 37	94.67	108.30
53 X 26	94.67	132.92
53 X 19	94.67	167.26
46 X 40	94.67	110.77
46 X 37	94.67	113.22
46 X 26	94.67	134.27
46 X 19	94.67	166.11
38 X 37	94.67	122.64
38 X 26	94.67	141.78
38 X 19	94.67	170.19
26 X 26	94.67	174.52
26 X 19	94.67	210.00

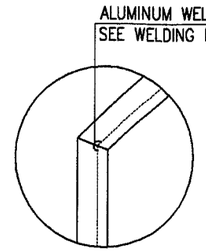

CORNER DETAIL #1

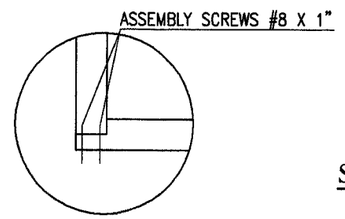

TYP 90° CORNER DETAIL

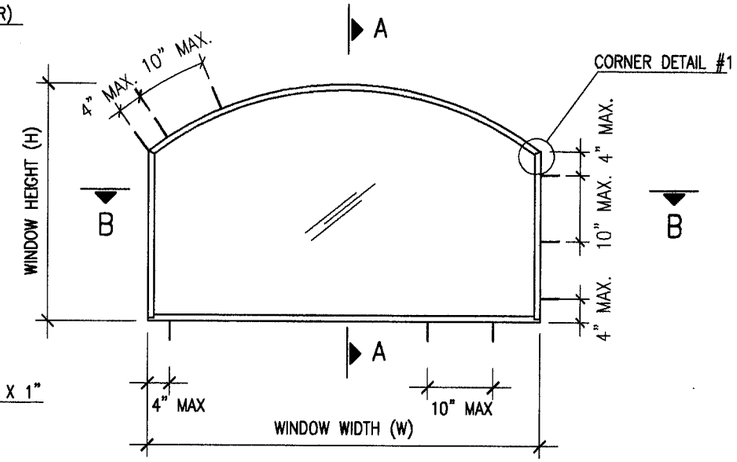

SIDEWAYS RECTANGLE WITH CIRCLE TOP

TYPICAL ELEVATION

ANCHORS:

1. FOR CONNECTION TO CONCRETE BLOCK USE 1/4" ELCO TAPCON WITH 1 1/2" MINIMUM EMBEDMENT INTO WALL
2. FOR CONNECTION TO METAL STRUCTURE USE 1/4" -20 HILTI KWIK-FLEX SELF-DRILLING SCREW

   STEEL MATERIAL SHALL CONFORM TO ASTM A500, A653 OR A36 WITH 12 Ga MINIMUM WALL THICKNESS. ALUMINUM ALLOY 6063-T5 WITH 1/8" MINIMUM WALL THICKNESS.
3. FOR CONNECTION TO 2BY WOOD BUCK OR WOOD STRUCTURE USE 1/4"-20 HILTI KWIK-FLEX SELF-DRILLING SCREW WITH 1 1/2" MINIMUM EMBEDMENT INTO WOOD

WELDING:

FOR CORNER WELDED CONNECTIONS USE 1/8" FILLET WELD WITH 1 1/4" MINIMUN LENGTH MADE WITH ER4043 FILLER ALLOY

PRODUCT REVISED
as complying with the Florida Building Code
Acceptance No. 06-0328.02
Application Date Oct. 15, 2011
By: Manuel Perez
Miami-Dade Product Control Division

9-30-05
FRANCISCO HERNANDEZ
FLORIDA PE # 51393

Sunshine Windows Manufacturing, Inc.
1745 W. 33rd Place
Hialeah, Florida 33012
Ph: (305)364-9952
Fax:(305)828-5118

FRANCISCO HERNANDEZ P. E.
Structural Engineering
351 NW 82nd AVE #1118
Miami, Florida 33126
Phone (305) 264 7919
Fax (305) 266 3427

SERIES 4250 ALUMINUM
CIRCLE TOP FIXED WINDOW

Drawn By: MH
Date: 9-30-05
Scale: 3/8"=1'
Revision:
Revision:

DRAWING NO.
PW-00-02

SHEET
5 OF 8

DESIGN PRESSURE CHART - PSF

WINDOW SIZE W X H INCHES	3/16" ANNEALED GLASS		DSB ANNEALED GLASS	
	POS.	NEG.	POS.	NEG.
26 X 120	37.70	37.70	–	–
19 X 120	62.67	71.50	–	–
26 X 108	38.90	38.90	–	–
19 X 108	62.67	73.50	–	–
26 X 96	40.20	40.20	–	–
19 X 96	62.67	75.20	–	–
26 X 91	41.00	41.00	–	–
19 X 91	62.67	76.40	–	–
26 X 84	45.50	45.50	–	–
19 X 84	62.67	78.10	–	–
46 X 78	32.60	32.60	19.20	19.20
40 X 78	32.90	32.90	21.30	21.30
37 X 78	33.10	33.10	21.30	21.30
26 X 78	44.20	44.20	21.40	21.40
19 X 78	62.67	79.40	32.80	32.80
58 X 74	31.10	31.10	–	–
54 X 74	31.60	31.60	–	–
50 X 74	33.60	33.60	18.60	18.60
46 X 74	34.70	34.70	20.00	20.00
40 X 74	35.60	35.60	22.40	22.40
37 X 74	35.70	35.70	23.60	23.60
26 X 74	45.70	45.70	29.65	29.65
19 X 74	62.67	80.30	33.50	33.50
58 X 63	34.90	34.90	18.60	18.60
54 X 63	37.00	37.00	19.80	19.80
50 X 63	39.10	39.10	21.10	21.10
46 X 63	40.70	40.70	23.00	23.00
40 X 63	42.90	42.90	25.90	25.90
37 X 63	43.50	43.50	27.60	27.60
26 X 63	51.30	51.30	28.80	28.80
19 X 63	62.67	84.20	36.50	36.50

DESIGN PRESSURE CHART - PSF

WINDOW SIZE W X H INCHES	3/16" ANNEALED GLASS		DSB ANNEALED GLASS	
	POS.	NEG.	POS.	NEG.
50 X 53	44.90	44.90	24.60	24.60
46 X 53	47.70	47.70	26.40	26.40
40 X 53	51.30	51.30	30.10	30.10
37 X 53	52.60	52.60	32.20	32.20
26 X 53	60.00	60.00	37.30	37.30
19 X 53	62.67	88.90	40.50	40.50
40 X 46	58.60	58.60	34.40	34.40
37 X 46	62.67	61.30	37.00	37.00
26 X 46	62.67	71.30	44.50	44.50
19 X 46	62.67	94.30	46.80	46.80
37 X 38	62.67	73.10	43.30	43.30
26 X 38	62.67	85.40	55.40	55.40
19 X 38	62.67	116.00	58.60	58.60
26 X 26	62.67	130.00	62.67	78.60
19 X 26	62.67	166.00	62.67	109.00

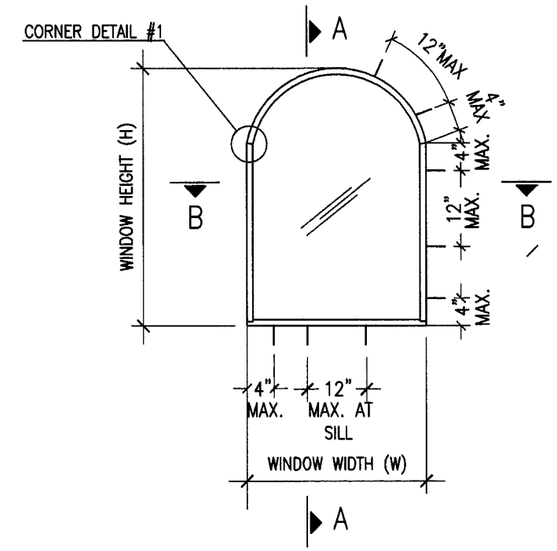

UPRIGHT RECTANGLE WITH CIRCLE TOP
TYPICAL ELEVATION

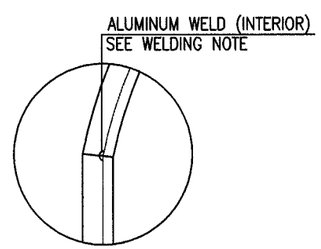

CORNER DETAIL #1

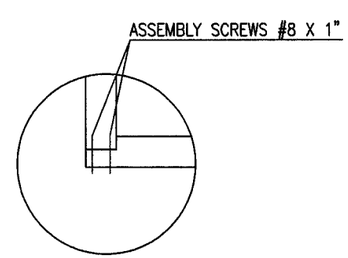

TYP 90° CORNER DETAIL

ANCHORS:

1. FOR CONNECTION TO CONCRETE BLOCK USE 1/4" ELCO TAPCON WITH 1 1/2" MINIMUM EMBEDMENT INTO WALL
2. FOR CONNECTION TO METAL STRUCTURE USE 1/4" –20 HILTI KWIK–FLEX SELF–DRILLING SCREW

   STEEL MATERIAL SHALL CONFORM TO ASTM A500, A653 OR A36 WITH 12 Ga MINIMUM WALL THICKNESS. ALUMINUM ALLOY 6063–T5 WITH 1/8" MINIMUM WALL THICKNESS.
3. FOR CONNECTION TO 2BY WOOD BUCK OR WOOD STRUCTURE USE 1/4"–20 HILTI KWIK–FLEX SELF–DRILLING SCREW WITH 1 1/2" MINIMUM EMBEDMENT INTO WOOD

WELDING:

FOR CORNER WELDED CONNECTIONS USE 1/8" FILLET WELD WITH 1 1/4" MINIMUN LENGTH MADE WITH ER4043 FILLER ALLOY

PRODUCT REVISED
as complying with the Florida Building Code
Acceptance No. 06-0328.02
Expiration Date OCT. 15, 2011
By Manuel Perez
Miami Dade Product Control Division

9-30-05
FRANCISCO HERNANDEZ
FLORIDA PE # 51393

Sunshine Windows Manufacturing, Inc.
1745 W. 33rd Place
Hialeah, Florida 33012
Ph: (305)364–9952
Fax:(305)828–5118

FRANCISCO HERNANDEZ P. E.
Structural Engineering
351 NW 82nd AVE #1118
Miami, Florida 33126
Phone (305) 264 7919
Fax (305) 266 3427

SERIES 4250 ALUMINUM
CIRCLE TOP FIXED WINDOW

Drawn By: MH
Date: 9–30–05
Scale: 3/8"=1'
Revision:
Revision:

DRAWING NO.
PW–00–02

SHEET
6 OF 8

DESIGN PRESSURE CHART - PSF

WINDOW SIZE W X H INCHES	3/16" TEMPERED GLASS	
	POS.	NEG.
40 X 120	62.67	70.04
37 X 120	62.67	74.60
26 X 120	62.67	100.70
19 X 120	62.67	133.44
46 X 108	62.67	64.48
40 X 108	62.67	71.63
37 X 108	62.67	76.14
26 X 108	62.67	102.08
19 X 108	62.67	134.72
50 X 96	60.03	60.03
46 X 96	62.67	65.25
40 X 96	62.67	73.72
37 X 96	62.67	78.16
26 X 96	62.67	103.86
19 X 96	62.67	136.37
54 X 91	55.59	55.59
50 X 91	60.03	60.03
46 X 91	62.67	65.25
40 X 91	62.67	74.81
37 X 91	62.67	79.20
26 X 91	62.67	104.76
19 X 91	62.67	137.20
58 X 84	51.75	51.75
54 X 84	55.59	55.59
50 X 84	60.03	60.03
46 X 84	62.67	65.25
40 X 84	62.67	75.04
37 X 84	62.67	80.92
26 X 84	62.67	106.23
19 X 84	62.67	138.54
46 X 78	72.85	72.85
40 X 78	79.45	79.45
37 X 78	83.72	83.72
26 X 78	94.67	109.07
19 X 78	94.67	141.62

DESIGN PRESSURE CHART - PSF

WINDOW SIZE W X H INCHES	3/16" TEMPERED GLASS	
	POS.	NEG.
50 X 74	75.23	75.23
46 X 74	78.57	78.57
40 X 74	85.33	85.33
37 X 74	89.76	89.76
26 X 74	94.67	116.22
19 X 74	94.67	150.40
58 X 63	78.23	78.23
54 X 63	82.96	82.96
50 X 63	84.88	84.88
46 X 63	87.65	87.65
40 X 63	93.77	93.77
37 X 63	94.67	97.95
26 X 63	94.67	124.06
19 X 63	94.67	158.66
50 X 53	90.75	90.75
46 X 53	94.67	98.64
40 X 53	94.67	104.73
37 X 53	94.67	108.30
26 X 53	94.67	132.92
19 X 53	94.67	167.26
40 X 46	94.67	110.77
37 X 46	94.67	113.22
26 X 46	94.67	134.27
19 X 46	94.67	166.11
37 X 38	94.67	122.64
26 X 38	94.67	141.78
19 X 38	94.67	170.19
26 X 26	94.67	174.52
19 X 26	94.67	210.00

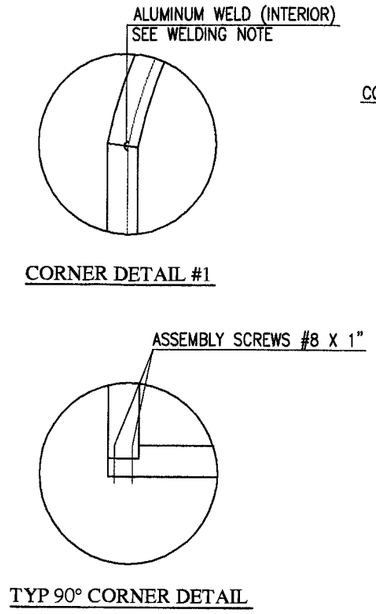

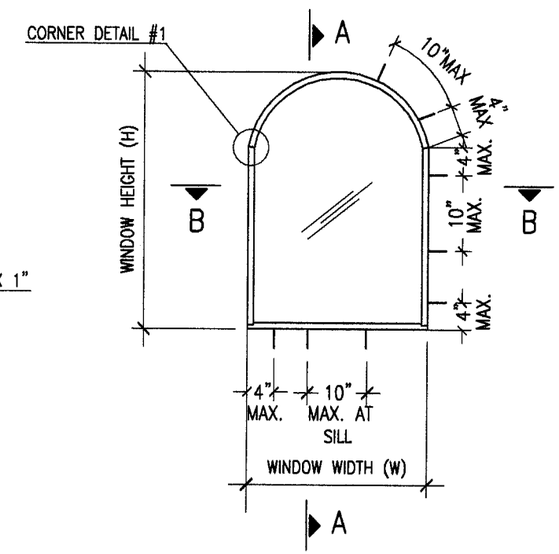

UPRIGHT RECTANGLE WITH CIRCLE TOP
TYPICAL ELEVATION

ANCHORS:

1. FOR CONNECTION TO CONCRETE BLOCK USE 1/4" ELCO TAPCON WITH 1 1/2" MINIMUM EMBEDMENT INTO WALL
2. FOR CONNECTION TO METAL STRUCTURE USE 1/4" –20 HILTI KWIK–FLEX SELF–DRILLING SCREW

   STEEL MATERIAL SHALL CONFORM TO ASTM A500, A653 OR A36 WITH 12 Ga MINIMUM WALL THICKNESS. ALUMINUM ALLOY 6063–T5 WITH 1/8" MINIMUM WALL THICKNESS.
3. FOR CONNECTION TO 2BY WOOD BUCK OR WOOD STRUCTURE USE 1/4"–20 HILTI KWIK–FLEX SELF–DRILLING SCREW WITH 1 1/2" MINIMUM EMBEDMENT INTO WOOD

WELDING:

FOR CORNER WELDED CONNECTIONS USE 1/8" FILLET WELD WITH 1 1/4" MINIMUN LENGTH MADE WITH ER4043 FILLER ALLOY

PRODUCT REVIEWED
as complying with the Florida
Building Code
Acceptance No. 06-0328.02
Expiration Date OCT 15 2011
By Manuel Perez
Miami-Dade Product Control
Division

9-30-05
FRANCISCO HERNANDEZ
FLORIDA PE # 51393

Sunshine Windows Manufacturing, Inc.
1745 W. 33rd Place
Hialeah, Florida 33012
Ph: (305)364–9952
Fax:(305)828–5118

FRANCISCO HERNANDEZ P. E.
Structural Engineering
351 NW 82nd AVE #1118
Miami, Florida 33126
Phone (305) 264 7919
Fax (305) 266 3427

SERIES 4250 ALUMINUM
CIRCLE TOP FIXED WINDOW

Drawn By: MH
Date: 9–30–05
Scale: 3/8"=1'
Revision:
Revision:

DRAWING NO.
PW–00–02

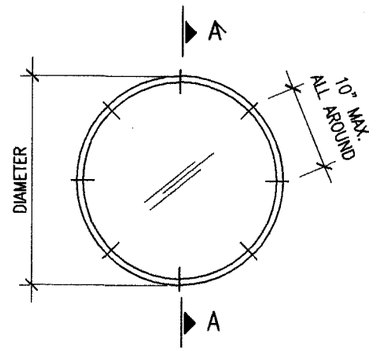

FULL ROUND
TYPICAL ELEVATION

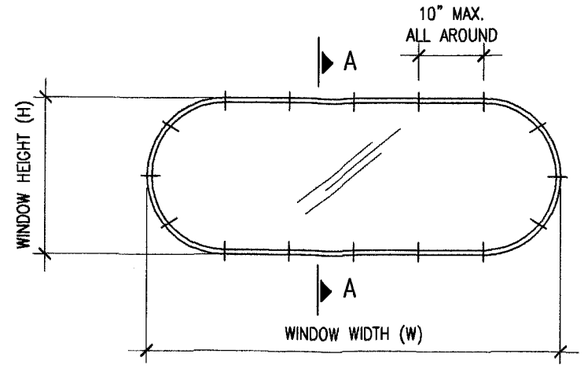

OVAL
TYPICAL ELEVATION

OVAL / DESIGN PRESSURE CHART - PSF						
WINDOW SIZE W X H INCHES	3/16" TEMPERED GLASS		3/16" ANNEALED GLASS		DSB ANNEALED GLASS	
	POS.	NEG.	POS.	NEG.	POS.	NEG.
108 X 46	62.67	64.48	–	–	–	–
108 X 37	62.67	76.14	–	–	–	–
108 X 26	62.67	102.08	–	–	–	–
91 X 46	62.67	65.25	–	–	–	–
91 X 37	62.67	79.20	–	–	–	–
91 X 26	62.67	104.76	–	–	–	–
74 X 46	78.57	78.57	34.70	34.70	–	–
74 X 37	89.76	89.76	35.70	35.70	–	–
74 X 26	94.67	116.22	45.70	45.70	–	–
53 X 46	94.67	98.64	47.70	47.70	–	–
53 X 37	94.67	108.30	52.60	52.60	32.20	32.20
53 X 26	94.67	132.92	60.00	60.00	37.30	37.30
38 X 24	94.67	141.78	85.40	85.40	55.40	55.40

FULL ROUND / DESIGN PRESSURE CHART - PSF							
WINDOW DIAMETER INCHES	3/16" TEMPERED GLASS		3/16" ANNEALED GLASS		DSB ANNEALED GLASS		NUMBER OF ANCHORS
	POS.	NEG.	POS.	NEG.	POS.	NEG.	
46	94.67	96.91	47.70	47.70	–	–	14
36	94.67	122.64	73.10	73.10	43.30	43.30	11
24	94.67	174.52	94.67	130.00	76.60	76.60	7

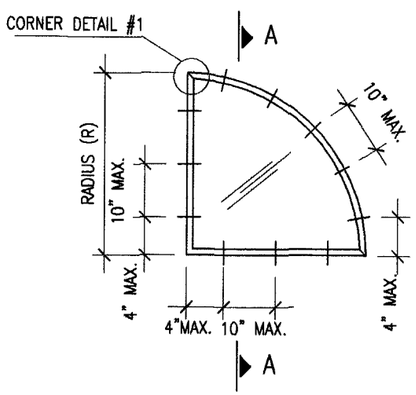

QUARTER ROUND
TYPICAL ELEVATION

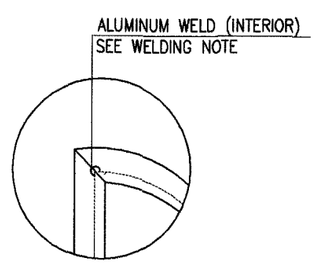

CORNER DETAIL #1

QUARTER ROUND / DESIGN PRESSURE CHART - PSF								
WINDOW RADIUS INCHES	3/16" TEMPERED GLASS		3/16" ANNEALED GLASS		DSB ANNEALED GLASS		NUMBER OF ANCHORS	
	POS.	NEG.	POS.	NEG.	POS.	NEG.	STRAIGHT SIDE	ARCH
46	94.67	96.91	47.70	47.70	–	–	5	8
36	94.67	122.64	73.10	73.10	43.30	43.30	4	7
24	94.67	174.52	94.67	130.00	76.60	76.60	3	5

ANCHORS:

1. FOR CONNECTION TO CONCRETE BLOCK USE 1/4" ELCO TAPCON WITH 1 1/2" MINIMUM EMBEDMENT INTO WALL
2. FOR CONNECTION TO METAL STRUCTURE USE 1/4" –20 HILTI KWIK–FLEX SELF–DRILLING SCREW

   STEEL MATERIAL SHALL CONFORM TO ASTM A500, A653 OR A36 WITH 12 Ga MINIMUM WALL THICKNESS.
   ALUMINUM ALLOY 6063–T5 WITH 1/8" MINIMUM WALL THICKNESS.
3. FOR CONNECTION TO 2BY WOOD BUCK OR WOOD STRUCTURE USE 1/4"–20 HILTI KWIK–FLEX SELF–DRILLING SCREW WITH 1 1/2" MINIMUM EMBEDMENT INTO WOOD

WELDING:

FOR CORNER WELDED CONNECTIONS USE 1/8" FILLET WELD WITH 1 1/4" MINIMUN LENGTH MADE WITH ER4043 FILLER ALLOY

PRODUCT REVISED
is complying with the Florida
Building Code
Acceptance No. 06-0328.02
Expiration Date OCT. 15, 2011
By Manuel Perez
Manager of Product Control

9-30-05
FRANCISCO HERNANDEZ
FLORIDA PE # 51393

Sunshine Windows Manufacturing, Inc.
1745 W. 33rd Place
Hialeah, Florida 33012
Ph: (305)364–9952
Fax:(305)828–5118

FRANCISCO HERNANDEZ P. E.
Structural Engineering
351 NW 82nd AVE #1118
Miami, Florida 33126
Phone (305) 264 7919
Fax (305) 266 3427

SERIES 4250 ALUMINUM
CIRCLE TOP FIXED WINDOW

Drawn By: MH
Date: 9–30–05
Scale: 3/8"=1'
Revision:
Revision:

DRAWING NO.
PW–00–02

SHEET
8 OF 8