NON-HVHZ

MIAMI-DADE COUNTY, FLORIDA
METRO-DADE FLAGLER BUILDING

BUILDING CODE COMPLIANCE OFFICE (BCCO)
PRODUCT CONTROL DIVISION

140 WEST FLAGLER STREET, SUITE 1603
MIAMI, FLORIDA 33130-1563
(305) 375-2901 FAX (305) 375-2908

NOTICE OF ACCEPTANCE (NOA)

Bermuda Roof Co., Inc.
1499 W. Palmetto Park Road, Suite 169
Boca Raton, FL 33486

SCOPE:
This NOA is being issued under the applicable rules and regulations governing the use of construction materials. The documentation submitted has been reviewed by Miami-Dade County Product Control Division and accepted by the Board of Rules and Appeals (BORA) to be used in **NON-High Velocity Hurricane Zone (NON-HVHZ)** areas where allowed by the Authority Having Jurisdiction (AHJ).

This NOA shall not be valid after the expiration date stated below. The Miami-Dade County Product Control Division (In Miami Dade County) and/or the AHJ (in areas other than Miami Dade County) reserve the right to have this product or material tested for quality assurance purposes. If this product or material fails to perform in the accepted manner, the manufacturer will incur the expense of such testing and the AHJ may immediately revoke, modify, or suspend the use of such product or material within their jurisdiction. BORA reserves the right to revoke this acceptance, if it is determined by Miami-Dade County Product Control Division that this product or material fails to meet the requirements of the applicable building code.

This product is approved as described herein, and has been designed to comply with the **NON-High Velocity Hurricane Zone (NON-HVHZ)** of the Florida Building Code.

DESCRIPTION: Tile-Tite Lightweight Mortar

LABELING: Each unit shall bear a permanent label with the manufacturer's name or logo, city, state and following statement: " **NON-HVHZ** Miami-Dade County Product Control Approved", unless otherwise noted herein.

RENEWAL of this NOA shall be considered after a renewal application has been filed and there has been no change in the applicable building code negatively affecting the performance of this product.

TERMINATION of this NOA will occur after the expiration date or if there has been a revision or change in the materials, use, and/or manufacture of the product or process. Misuse of this NOA as an endorsement of any product, for sales, advertising or any other purposes shall automatically terminate this NOA. Failure to comply with any section of this NOA shall be cause for termination and removal of NOA.

ADVERTISEMENT: The NOA number preceded by the words **NON-HVHZ** Miami-Dade County, Florida, and followed by the expiration date may be displayed in advertising literature. If any portion of the NOA is displayed, then it shall be done in its entirety.

INSPECTION: A copy of this entire NOA shall be provided to the user by the manufacturer or its distributors and shall be available for inspection at the job site at the request of the Building Official.

This new NOA consists of pages 1 through 7.
The submitted documentation was reviewed by Jorge L. Acebo.

ROOFING COMPONENT APPROVAL:

Category:	Roofing
Sub-Category:	Roof Tile Adhesives
Material:	Cement
Deck Type:	Wood
Maximum Design Pressure	N/A

SCOPE:

This approves "Tile-Tite" Roof Tile Mortar, as manufactured by Bermuda Roof Company, Inc. as described in this Notice of Acceptance, and designed to comply with the **NON-High Velocity Hurricane Zone** of the Florida Building Code.

PRODUCT DESCRIPTION:

Manufactured by Applicant	Dimensions	Product Description
"Tile Tite"Roof Tile Mortar	N/A	Premixed prebagged roof tile mortar for used with approved roof tile in accordance with Section 1507.3 of the FBC.

LIMITATIONS:

1. Fire classification is not part of this acceptance.
2. "Tile-Tite" Roof Tile Mortar shall be placed in accordance with the 'Placement Details' provided herein. Each generic tile profile requires a specific placement, (see Placement Detail listed herein).
3. "Tile-Tite" Roof Tile Mortar shall be applied in accordance with Bermuda Roof Specifications.
4. Tile must be applied within 5 minutes of the application of "Tile-Tite' Roof Tile Mortar.

INSTALLATION:

1. "Tile-Tite" Roof Tile Mortar and its components shall be installed in strict compliance with Section 1507.3 of the Florida Building Code.
2. Hip and Ridge Tiles shall be adhered in accordance with the FBC 2005 supplement and Hip and Ridge- Supplement Instructions in FRSA/TRI "Concrete and Clay Roof Tile Installation Manual" 07320/08-05.
3. Placement Details

Adhesive Placement:

GENERIC PROFILE:	PLACEMENT DETAIL #
Two piece Barrel	A
Spanish & Mission "S"	B
Low Profile Roll	C
Flat	D

LABELING:

All bags shall be labeled in accordance with the Standard Conditions herein.

BUILDING PERMIT REQUIREMENTS:

Any documents required by the Building Official or applicable building code in order to properly evaluate the installation of this system.

EVIDENCE SUBMITTED:

Test Agency	Test Identifier	Test Name/Report	Date
Center for Applied Engineering, Inc.	#94-084	TAS 101	04/08/94
Florida Testing and Engineering, Inc.	#450225	ASTM C9 Type M	05/10/94
PRI Asphalt Technologies	BRCI-001-02-01 BRCI-001-02-02(REV) BRCI-001-02-03	TAS 123 / TAS 101 SBCCI SSTD 11-99 SBCCI SSTD 11-99	03/14/06 03/15/06 03/15/06

SBCCI SSTD 11-99 Allowable Overturning Moment = Ma

Concrete Tiles	Avg Uplift Force lbF	Avg Wt. lbF	Ma (Allowable)	Ma (Avg)	Ma (low)
High Profile Tile	**137**	**10.6**	**73.8**	**73.8**	**82.4**
Medium Profile Tile	**110**	**9.74**	**58.7**	**58.7**	**64.3**
Flat Tile	**170**	**10.5**	**93.4**	**93.4**	**99.9**
Hip/Ridge Tiles*	**823**	**5.4**	**414**	**823.3**	**790**

*** The values contained in the table above for the Hip/Ridge Tiles were achieved by adhereing the Tile in a full bed of Tile-Tite Roof Tile Mortar so that the Hip/Ridge tile is full of Tile-Tite mortar and sufficient additional Tile-Tite mortar shall be applied to ensure that the hip/ridge tile is fully adhered to the underlying field tile.**

PLACEMENT DETAIL "A"

TILE & MORTAR PLACEMENT - BARREL TILE - 2 PC.

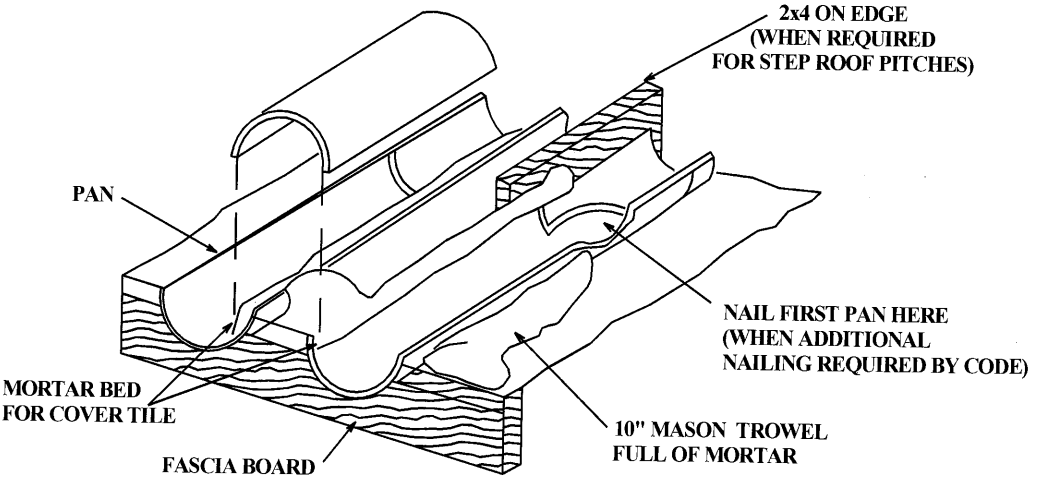

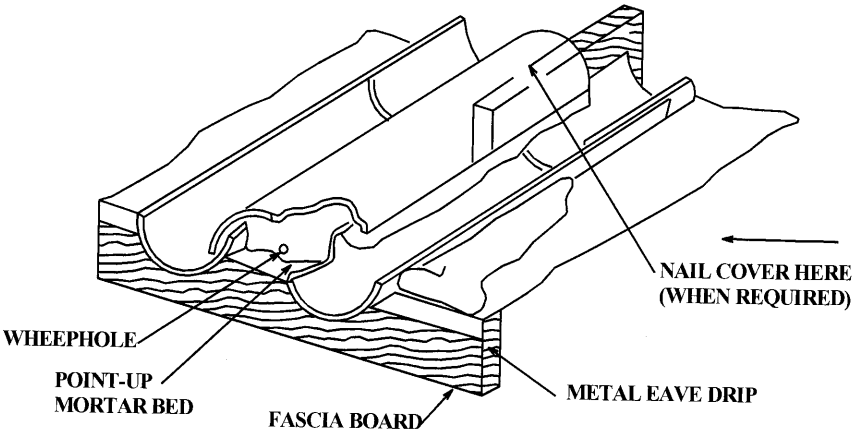

PLACEMENT DETAIL "B"

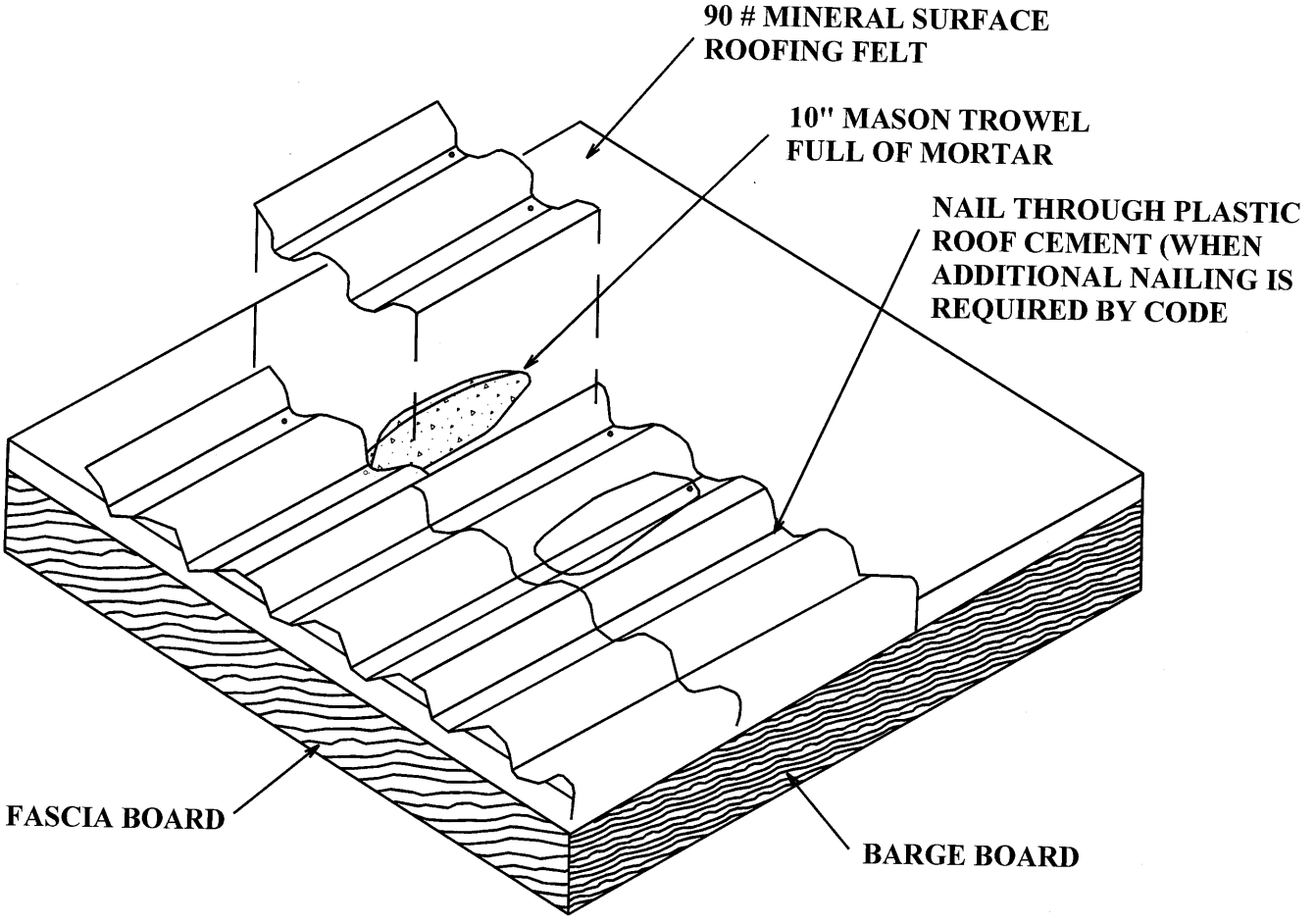

PLACEMENT DETAIL "C"

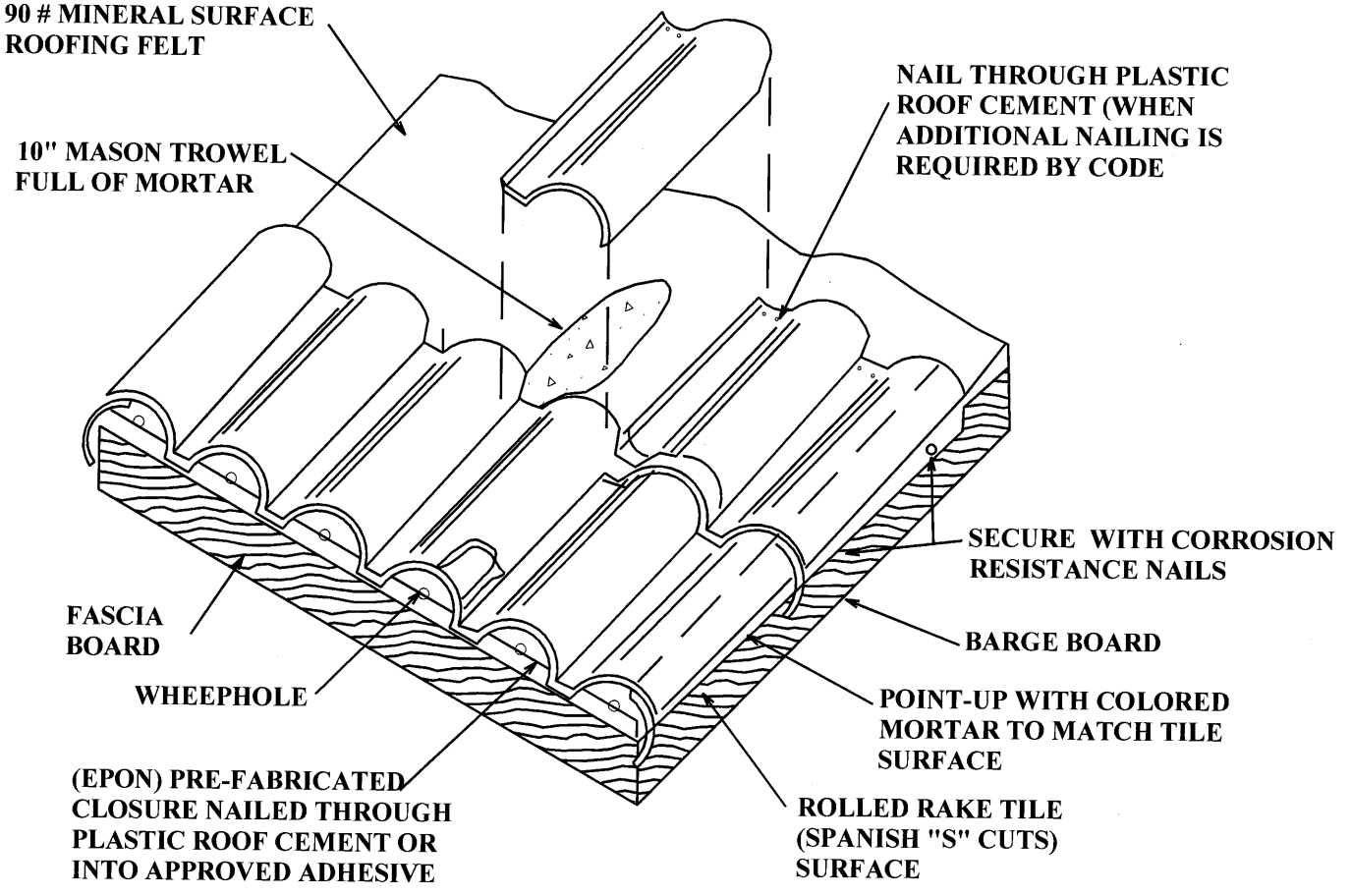

PLACEMENT DETAIL "D"

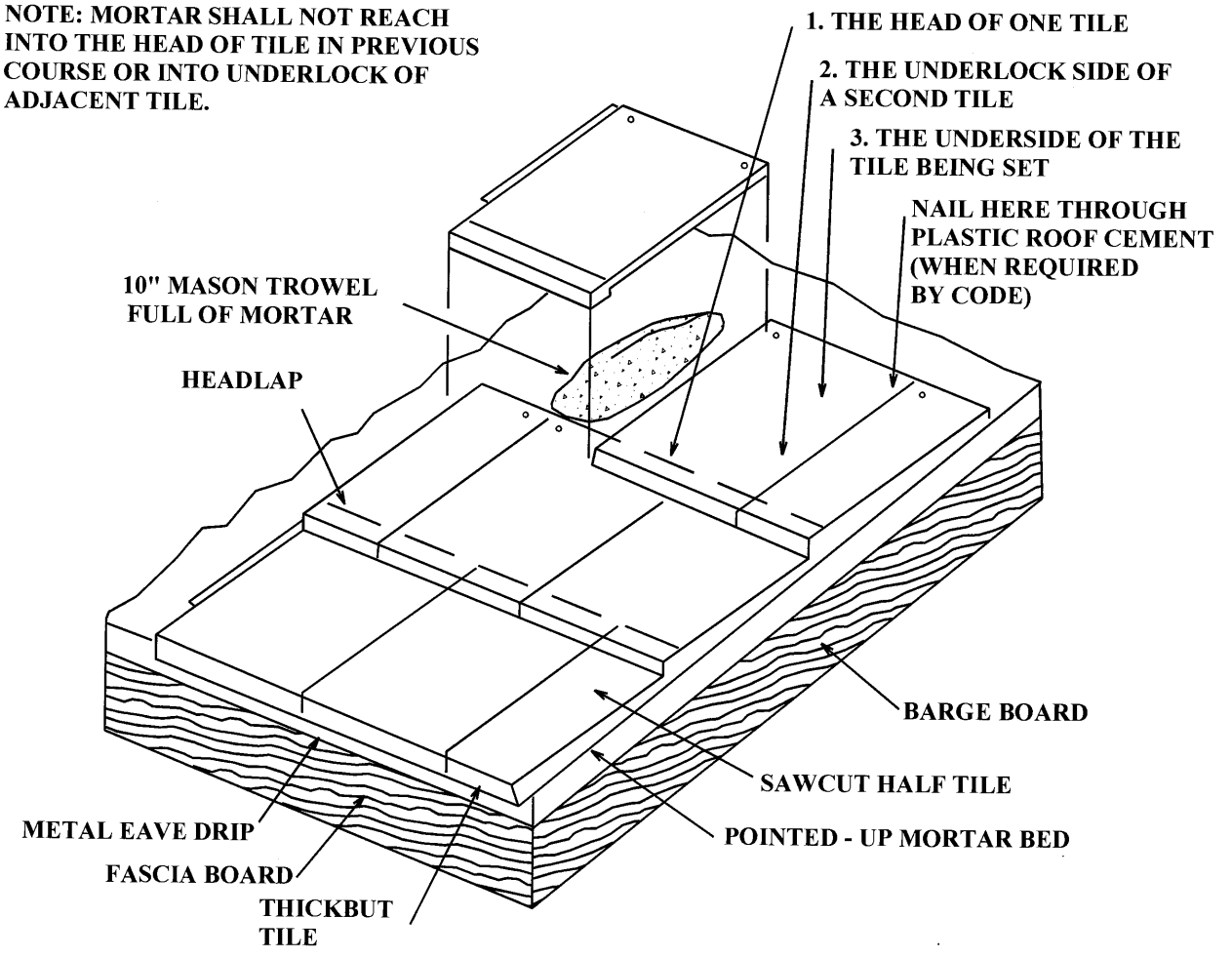

END OF THIS ACCEPTANCE