MIAMI-DADE COUNTY

BUILDING CODE COMPLIANCE OFFICE (BCCO)
PRODUCT CONTROL DIVISION

MIAMI-DADE COUNTY, FLORIDA
METRO-DADE FLAGLER BUILDING
140 WEST FLAGLER STREET, SUITE 1603
MIAMI, FLORIDA 33130-1563
(305) 375-2901 FAX (305) 375-2908
www.buildingcodeonline.com

NOTICE OF ACCEPTANCE (NOA)

YKK AP America
332 Firetower Road
Dublin, GA 31021

SCOPE:

This NOA is being issued under the applicable rules and regulations governing the use of construction materials. The documentation submitted has been reviewed by Miami-Dade County Product Control Division and accepted by the Board of Rules and Appeals (BORA) to be used in Miami Dade County and other areas where allowed by the Authority Having Jurisdiction (AHJ).

This NOA shall not be valid after the expiration date stated below. The Miami-Dade County Product Control Division (In Miami Dade County) and/or the AHJ (in areas other than Miami Dade County) reserve the right to have this product or material tested for quality assurance purposes. If this product or material fails to perform in the accepted manner, the manufacturer will incur the expense of such testing and the AHJ may immediately revoke, modify, or suspend the use of such product or material within their jurisdiction. BORA reserves the right to revoke this acceptance, if it is determined by Miami-Dade County Product Control Division that this product or material fails to meet the requirements of the applicable building code.

This product is approved as described herein, and has been designed to comply with the Florida Building Code, including the High Velocity Hurricane Zone.

DESCRIPTION: Series "YSD 600TH" Aluminum Sliding Glass Door-S.M.I.

APPROVAL DOCUMENT: Drawing No **W06-23**, titled "YSD600TH Aluminum Sliding Glass Door (S.M.I.)", sheets 1 through 9 of 9, prepared by AL-Farooq Corporation, dated 03/14/06, with last revision on 6/21/06, signed and sealed by Humayoun Farooq P. E., bearing the Miami-Dade County Product Control Approval stamp with the Notice of Acceptance number and approval date by the Miami-Dade County Product Control Division.

MISSILE IMPACT RATING: Small Missile Impact

LABELING: Each unit shall bear a permanent label with the manufacturer's name or logo, city, state and following statement: "Miami-Dade County Product Control Approved", unless otherwise noted herein.

RENEWAL of this NOA shall be considered after a renewal application has been filed and there has been no change in the applicable building code negatively affecting the performance of this product.

TERMINATION of this NOA will occur after the expiration date or if there has been a revision or change in the materials, use, and/or manufacture of the product or process. Misuse of this NOA as an endorsement of any product, for sales, advertising or any other purposes shall automatically terminate this NOA. Failure to comply with any section of this NOA shall be cause for termination and removal of NOA.

ADVERTISEMENT: The NOA number preceded by the words Miami-Dade County, Florida, and followed by the expiration date may be displayed in advertising literature. If any portion of the NOA is displayed, then it shall be done in its entirety.

INSPECTION: A copy of this entire NOA shall be provided to the user by the manufacturer or its distributors and shall be available for inspection at the job site at the request of the Building Official.

This NOA consists of this page 1 and evidence pages E-1, as well as approval document mentioned above.

The submitted documentation was reviewed by **Jaime D. Gascon, P.E.**

PRODUCT CONTROL ACCEPTED

J. Gascon
8/25/06

YKK AP America

NOTICE OF ACCEPTANCE: EVIDENCE SUBMITTED

A. DRAWINGS

1. Manufacturer's parts and sections drawings.
2. Drawing No **W06-23**, titled "YSD600TH Aluminum Sliding Glass Door (S.M.I.)", sheets 1 through 9 of 9, prepared by AL-Farooq Corporation, dated 03/14/06, with last revision on 6/21/06, signed and sealed by Humayoun Farooq P. E.

B. TESTS

1. Test reports on 1) Air Infiltration Test, per FBC, TAS 202-94
   2) Uniform Static Air Pressure Test, Loading per FBC, TAS 202-94
   3) Water Resistance Test, per FBC, TAS 202-94
   4) Small Missile Impact Test per FBC, TAS 201-94,
   5) Cyclic Wind Pressure Loading per FBC, TAS 203-94
   6) Forced Entry Test, per SFBC 2411 3.2.1, TAS 202-94

   along with the manufacturer's parts and section drawings of an aluminum sliding glass door, prepared by Hurricane Test Laboratory, LLC. Test Report No. **HTL-0231-0330-05**, dated 3/08/06, signed and sealed by Vinu J. Abraham, P.E.

C. CALCULATIONS

1. Revised Anchor verification calculations, complying with FBC-2004, dated 06/22/06, prepared by AL-Farooq Corporation, signed and sealed by Humayoun Farooq, P.E. Complies with ASTM-E1300-98

D. QUALITY ASSURANCE

1. Miami Dade Building Code Compliance Office (BCCO).

E. MATERIAL CERTIFICATIONS

1. Notice of Acceptance No. **06-0216.06** issued to Solutia, Inc. for their "Saflex IIIG Clear and Colored Interlayer" dated 05/05/06, expiring on 05/21/11.
2. Notice of Acceptance No. **05-1208.02** issued to E.I. DuPont DeNemours & Co., Inc., for their "DuPont Butacite PVB Interlayer" dated 01/05/06, expiring on 12/11/10.

F. STATEMENTS

1. Conformance letter dated on 03/13/06, signed and sealed by Humayoun Farooq, P.E.
2. "No financial Interest" letter dated on 03/13/06, signed and sealed by Humayoun Farooq, P.E.

G. OTHERS

1. Letter from the consultant, dated 07/10/06, stating that the product is in compliance with the Florida Building Code (FBC).

Jaime D. Gascon, P.E.
Chief, Product Control Division
NOA No 06-0405.10
Expiration Date: August 03, 2011
Approval Date: August 03, 2006

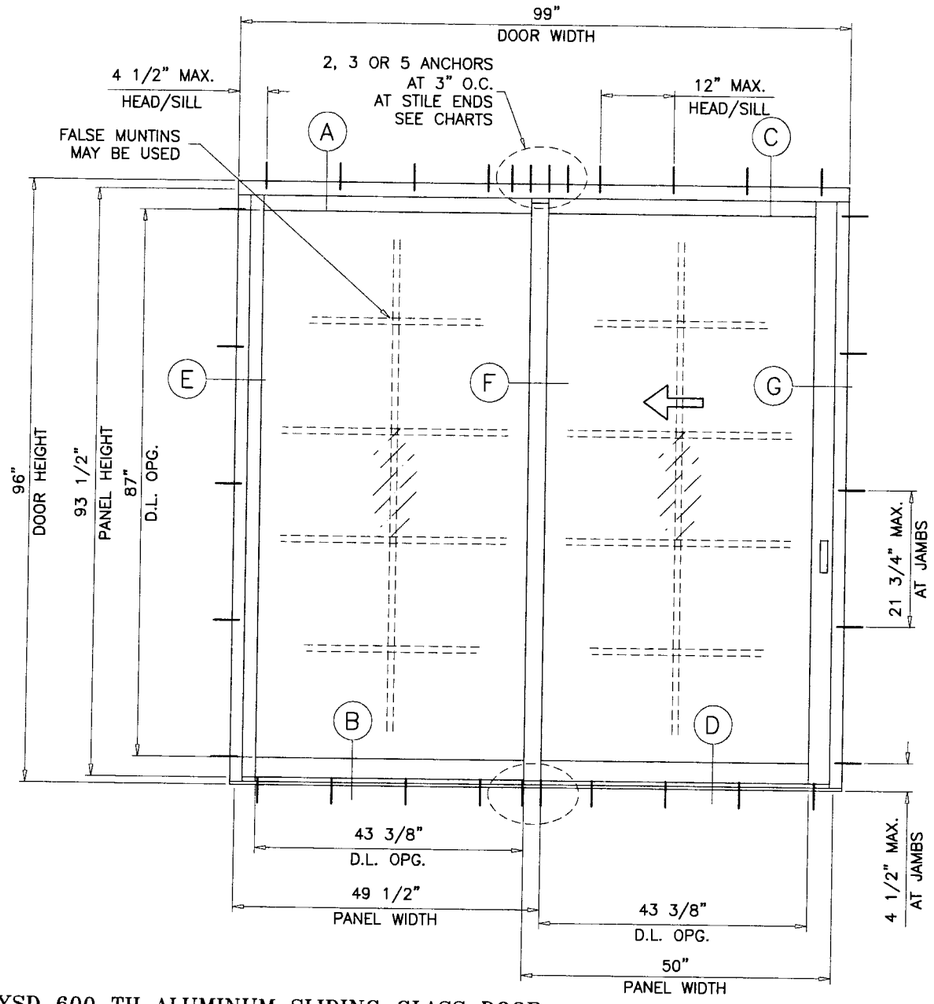

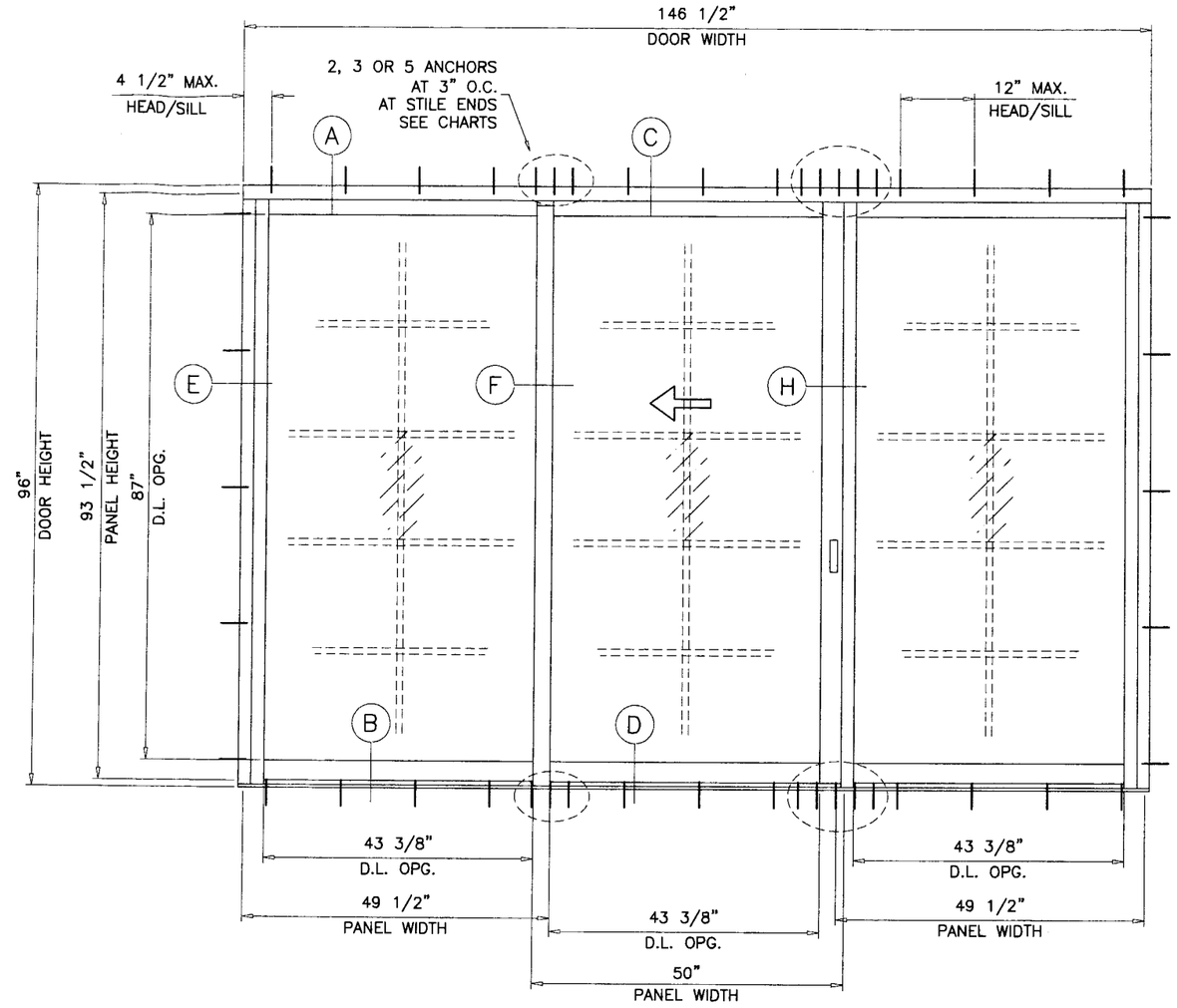

TYPICAL ELEVATION
TESTED UNITS

YSD 600 TH ALUMINUM SLIDING GLASS DOOR

SEE SHEET 3 FOR DESIGN LOAD CAPACITY OF DESIRED GLASS SIZE BASED ON APPLICABLE WIND DURATION.

USING ANCHOR CHART ON SHEET 3 SELECT ANCHOR OPTION WITH DESIGN RATING MORE THAN DESIGN LOADS REQUIRED.

LOWER DESIGN PRESSURES FROM GLASS OR ANCHOR CHARTS WILL APPLY TO ENTIRE SYSTEM.

THIS PRODUCT HAS BEEN DESIGNED AND TESTED TO COMPLY WITH THE REQUIREMENTS OF THE FLORIDA BUILDING CODE 2004 EDITION (REV. 2005) INCLUDING HIGH VELOCITY HURRICANE ZONE (HVHZ).

WOOD BUCKS BY OTHERS, MUST BE ANCHORED PROPERLY TO TRANSFER LOADS TO THE STRUCTURE.

ANCHORS SHALL BE AS LISTED, SPACED AS SHOWN ON DETAILS, ANCHORS EMBEDMENT TO BASE MATERIAL SHALL BE BEYOND WALL DRESSING OR STUCCO.

ANCHORING OR LOADING CONDITIONS NOT SHOWN IN THESE DETAILS ARE NOT PART OF THIS APPROVAL.

A LOAD DURATION INCREASE IN ALLOWABLE STRESS IS USED IN DESIGN OF ANCHORS INTO WOOD ONLY.

MATERIALS INCLUDING BUT NOT LIMITED TO STEEL/METAL SCREWS, THAT COME INTO CONTACT WITH OTHER DISSIMILAR MATERIALS SHALL MEET THE REQUIREMENTS OF 2004 FLORIDA BLDG. CODE SECTION 2003.8.4 (SUPPLEMENT 2005).

DOORS GLAZED WITH LAMINATED GLASS RATED FOR SMALL MISSILE IMPACT. MIAMI-DADE COUNTY APPROVED IMPACT RESISTANT SHUTTERS ARE REQUIRED FOR INSTALLATIONS UP TO 30 FT. OF GRADE. SHUTTERS NOT REQD. FOR INSTALLATIONS ABOVE 30 FT. OF GRADE.

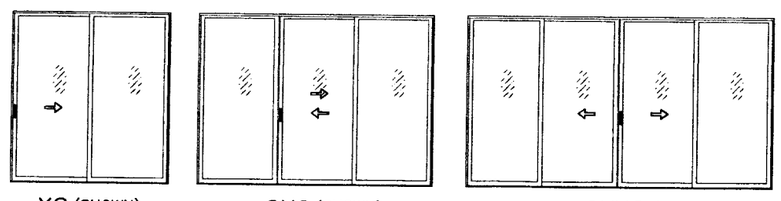

XO (SHOWN)
OX

OXO (SHOWN)

OXXO (SHOWN)

APPROVED CONFIGURATIONS

Approved as complying with the Florida Building Code
Date 08/03/06
NOA# 06-0405.10
Miami-Dade Product Control Division
By

LAMINATED GLASS
SMALL MISSILE IMPACT

Engr: DR. HUMAYOUN FAROOQ
STRUCTURES
FLA. PE # 16557
C.A.N. 3538

JUL 25 2006

AL-FAROOQ CORPORATION
ENGINEERS, PLANNERS & PRODUCT DESIGN
1235 SW 87 AVE
MIAMI, FLORIDA 33174
TEL. (305) 264-8100 FAX. (305) 262-6978
COMP-ANL\W06-23YKK

YKK AP AMERICA INC.
332 FIRETOWER ROAD
DUBLIN, GEORGIA 31021
TEL.(478) 277-1955 FAX(478) 277-1978

YSD600TH ALUMINUM SLIDING GLASS DOOR (S.M.I.)

revisions:

no	date	by	description
A	06.21.06		REV. PER BCCO COMMENTS

date: 03-14-06
scale: 1/2"=1'-0"
dr. by: HAMID
chk. by:

drawing no.
W06-23

sheet 1 of 9

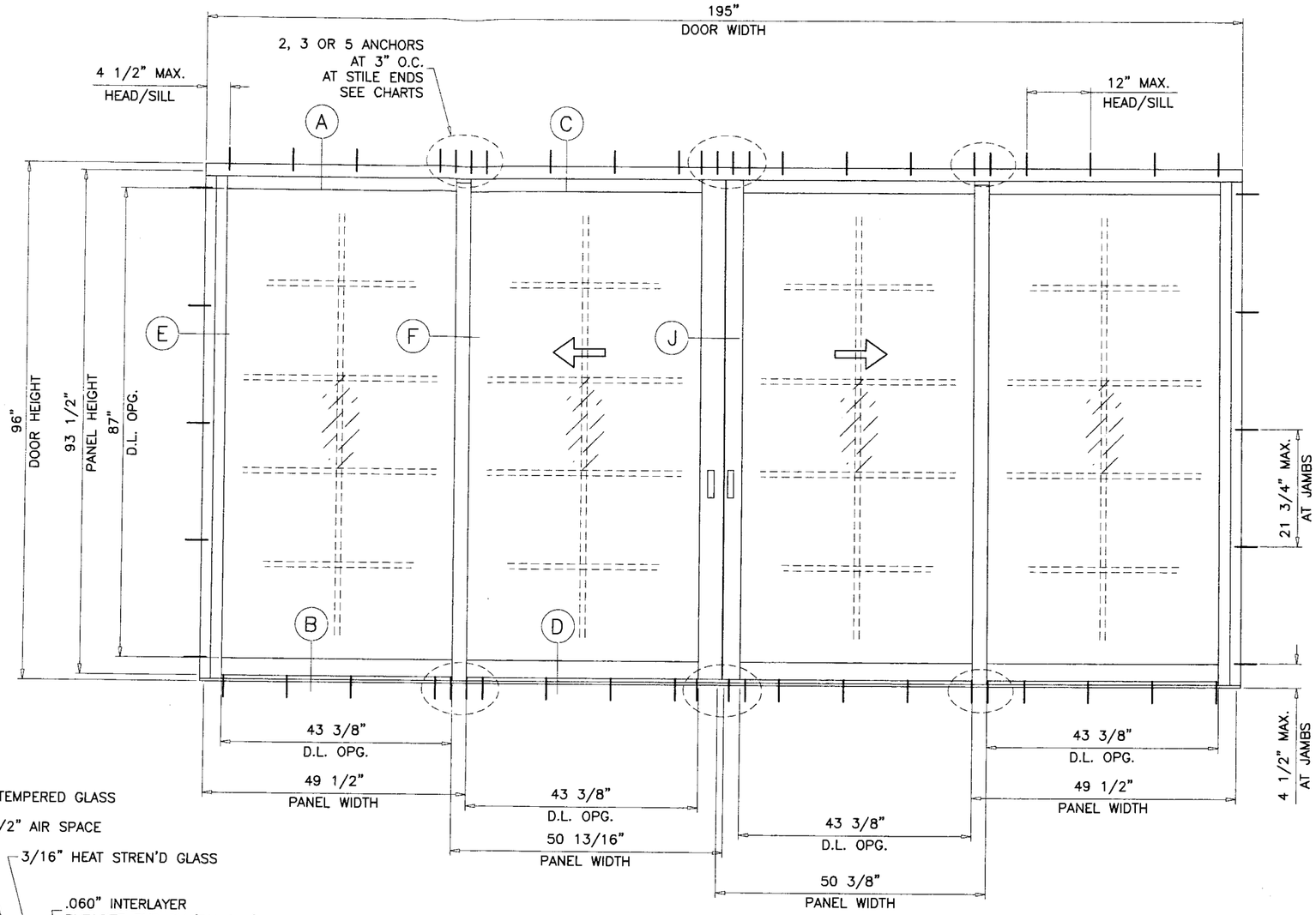

TYPICAL ELEVATION
TESTED UNIT

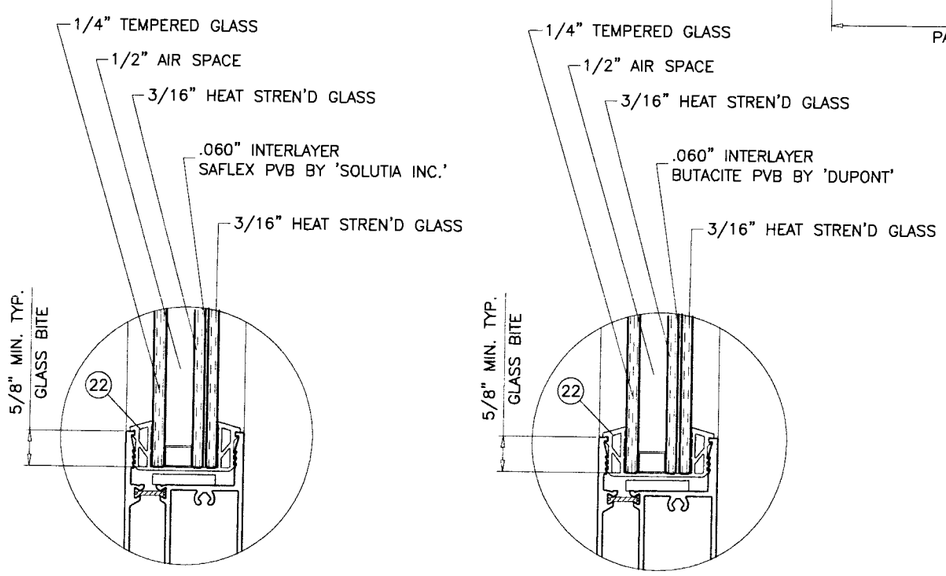

GLAZING OPTIONS

Approved as complying with the Florida Building Code
Date 08/03/06
NOA# 06-0405.10
Miami-Dade Product Control Division
By

Engr: DR. HUMAYOUN FAROOQ
STRUCTURES
FLA. PE # 16557
C.A.N. 3538

JUL 25 2006

AL-FAROOQ CORPORATION
ENGINEERS, PLANNERS & PRODUCT DESIGN
1235 SW 87 AVE
MIAMI, FLORIDA 33174
TEL. (305) 264-8100 FAX. (305) 262-6978
COMP-ANL\W06-23YKK

YSD600TH ALUMINUM SLIDING GLASS DOOR (S.M.I.)

YKK AP AMERICA INC.
332 FIRETOWER ROAD
DUBLIN, GEORGIA 31021
TEL.(478) 277-1955 FAX(478) 277-1978

revisions:

no	date	by	description
A	06.21.06		NO CHANGE THIS SHEET

date: 03-14-06
scale: -
dr. by: HAMID
chk. by:

drawing no.
W06-23

DESIGN LOAD CAPACITY – PSF			
PANEL WIDTH NOMINAL INCHES	DOOR HEIGHT INCHES	WITHOUT REINFORCING EXT. (+) INT. (–)	WITH REINFORCING EXT. (+) INT. (–)
30	80	100.0	120.0
36		100.0	120.0
42		100.0	120.0
48		100.0	119.0
49–1/2		100.0	113.0
54		100.0	102.0
30	84	100.0	120.0
36		100.0	120.0
42		100.0	120.0
48		100.0	113.0
49–1/2		100.0	107.0
54		96.7	96.7
30	90	100.0	120.0
36		100.0	120.0
42		100.0	120.0
48		100.0	105.0
49–1/2		100.0	101.0
30	96	100.0	120.0
36		100.0	120.0
42		100.0	120.0
48		100.0	100.0
49–1/2		95.0	95.0

GLASS CAPACITIES ON THIS CHART ARE BASED ON ASTM E1300–98 (60 SEC. WIND)

DESIGN LOAD CAPACITY – PSF			
PANEL WIDTH NOMINAL INCHES	DOOR HEIGHT INCHES	WITHOUT REINFORCING EXT. (+) INT. (–)	WITH REINFORCING EXT. (+) INT. (–)
30	80	100.0	120.0
36		100.0	120.0
42		100.0	120.0
48		100.0	120.0
49–1/2		100.0	120.0
54		100.0	120.0
30	84	100.0	120.0
36		100.0	120.0
42		100.0	120.0
48		100.0	120.0
49–1/2		100.0	120.0
54		100.0	120.0
30	90	100.0	120.0
36		100.0	120.0
42		100.0	120.0
48		100.0	120.0
49–1/2		100.0	120.0
30	96	100.0	120.0
36		100.0	120.0
42		100.0	120.0
48		100.0	120.0
49–1/2		98.9	120.0

GLASS CAPACITIES ON THIS CHART ARE BASED ON ASTM E1300–02 (3 SEC. GUSTS) WITH REDUCTIONS FOR FLEXIBLE SUPPORTS TO COMPLY WITH SECTION 2403.2 OF FBC 2004 EDITION.

DESIGN LOAD CAPACITY – PSF (MTG. STILE ANCHORS)											
		3/8" MAX. SHIM SPACE			5/16" MAX. SHIM SPACE					NO SHIM SPACE	
		ANCHORS TYPE A1 & A2		ANCHORS TYPE B	ANCHORS TYPE A1		ANCHORS TYPE A2		ANCHORS TYPE B	ANCHORS TYPE C	
PANEL WIDTH NOMINAL INCHES	DOOR HEIGHT INCHES	CLUSTER OF 3 ANCHORS	CLUSTER OF 5 ANCHORS	CLUSTER OF 2 ANCHORS	CLUSTER OF 2 ANCHORS	CLUSTER OF 4 ANCHORS	CLUSTER OF 2 ANCHORS	CLUSTER OF 4 ANCHORS	CLUSTER OF 2 ANCHORS	CLUSTER OF 2 ANCHORS	CLUSTER OF 4 ANCHORS
		EXT. (+) INT. (–)	EXT. (+) INT. (–)	EXT. (+) INT. (–)	EXT. (+) INT. (–)	EXT. (+) INT. (–)	EXT. (+) INT. (–)	EXT. (+) INT. (–)	EXT. (+) INT. (–)	EXT. (+) INT. (–)	EXT. (+) INT. (–)
30	80	120.0	120.0	120.0	116.7	120.0	120.0	120.0	120.0	120.0	120.0
36		120.0	120.0	120.0	116.7	120.0	120.0	120.0	120.0	120.0	120.0
42		113.8	120.0	120.0	100.0	120.0	120.0	120.0	120.0	120.0	120.0
48		112.1	120.0	120.0	100.0	120.0	120.0	120.0	120.0	120.0	120.0
49–1/2		108.7	120.0	120.0	99.0	120.0	120.0	120.0	120.0	120.0	120.0
54		99.6	120.0	120.0	90.8	120.0	120.0	120.0	120.0	111.8	120.0
30	84	120.0	120.0	120.0	111.1	120.0	120.0	120.0	120.0	120.0	120.0
36		120.0	120.0	120.0	111.1	120.0	120.0	120.0	120.0	120.0	120.0
42		108.4	120.0	120.0	95.3	120.0	120.0	120.0	120.0	117.3	120.0
48		106.7	120.0	120.0	95.3	120.0	120.0	120.0	120.0	117.3	120.0
49–1/2		103.5	120.0	120.0	94.3	120.0	120.0	120.0	120.0	116.1	120.0
54		94.9	120.0	114.9	86.4	120.0	114.9	120.0	120.0	106.4	120.0
30	90	120.0	120.0	120.0	103.7	120.0	120.0	120.0	120.0	120.0	120.0
36		118.0	120.0	120.0	103.7	120.0	120.0	120.0	120.0	120.0	120.0
42		101.2	120.0	118.2	88.9	120.0	118.2	120.0	120.0	109.5	120.0
48		99.6	120.0	118.2	88.9	120.0	118.2	120.0	120.0	109.5	120.0
49–1/2		96.6	120.0	117.0	88.0	120.0	117.0	120.0	120.0	108.4	120.0
30	96	116.2	120.0	120.0	97.3	120.0	120.0	120.0	120.0	119.8	120.0
36		110.7	120.0	120.0	97.3	120.0	120.0	120.0	120.0	119.8	120.0
42		94.9	120.0	110.8	83.4	120.0	110.8	120.0	120.0	102.6	120.0
48		93.4	120.0	110.8	83.4	120.0	110.8	120.0	120.0	102.6	120.0
49–1/2		90.5	120.0	109.7	82.5	120.0	109.7	120.0	120.0	101.6	120.0

$$\text{PANEL WIDTH NOMINAL} = \frac{\text{DOOR WIDTH}}{\text{NUMBER OF PANELS}}$$

Approved as complying with the Florida Building Code
Date 08/03/06
NOA# 06-0405.10
Miami-Dade Product Control Division
By

Engr: DR. HUMAYOUN FAROOQ
STRUCTURES
FLA. PE # 16557
C.A.N. 3538

JUL 25 2006

AL-FAROOQ CORPORATION
ENGINEERS, PLANNERS & PROJECT DESIGN
1235 SW 87 AVE
MIAMI, FLORIDA 33174
TEL. (305) 264-8100 FAX. (305) 262-6978
COMP-ANL\W06-23YKK

YSD600TH ALUMINUM SLIDING GLASS DOOR (S.M.I.)

YKK AP AMERICA INC.
332 FIRETOWER ROAD
DUBLIN, GEORGIA 31021
TEL.(478) 277-1955 FAX(478) 277-1978

revisions:

no	date	by	description
A	06.21.06		REV. PER BCCO COMMENTS

date: 03-14-06
scale: –
dr. by: HAMID
chk. by:

drawing no.
W06-23

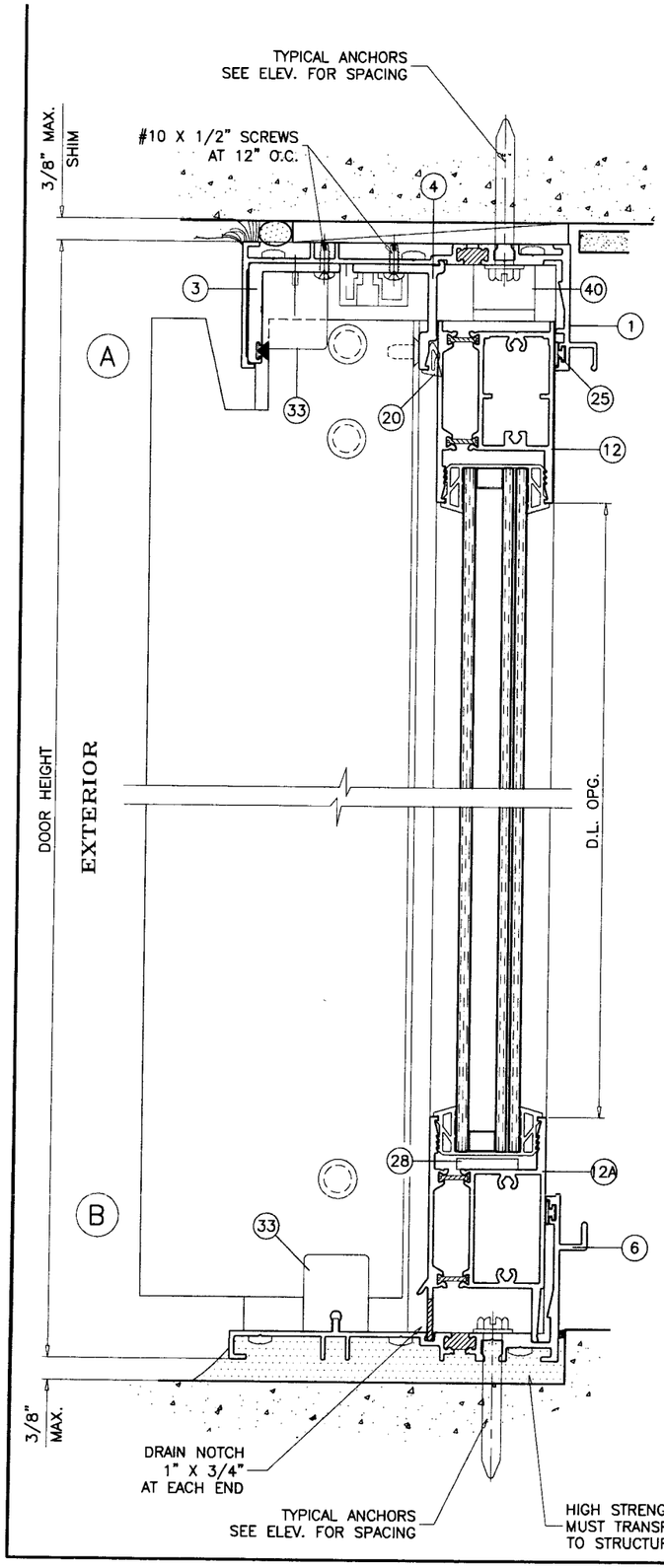

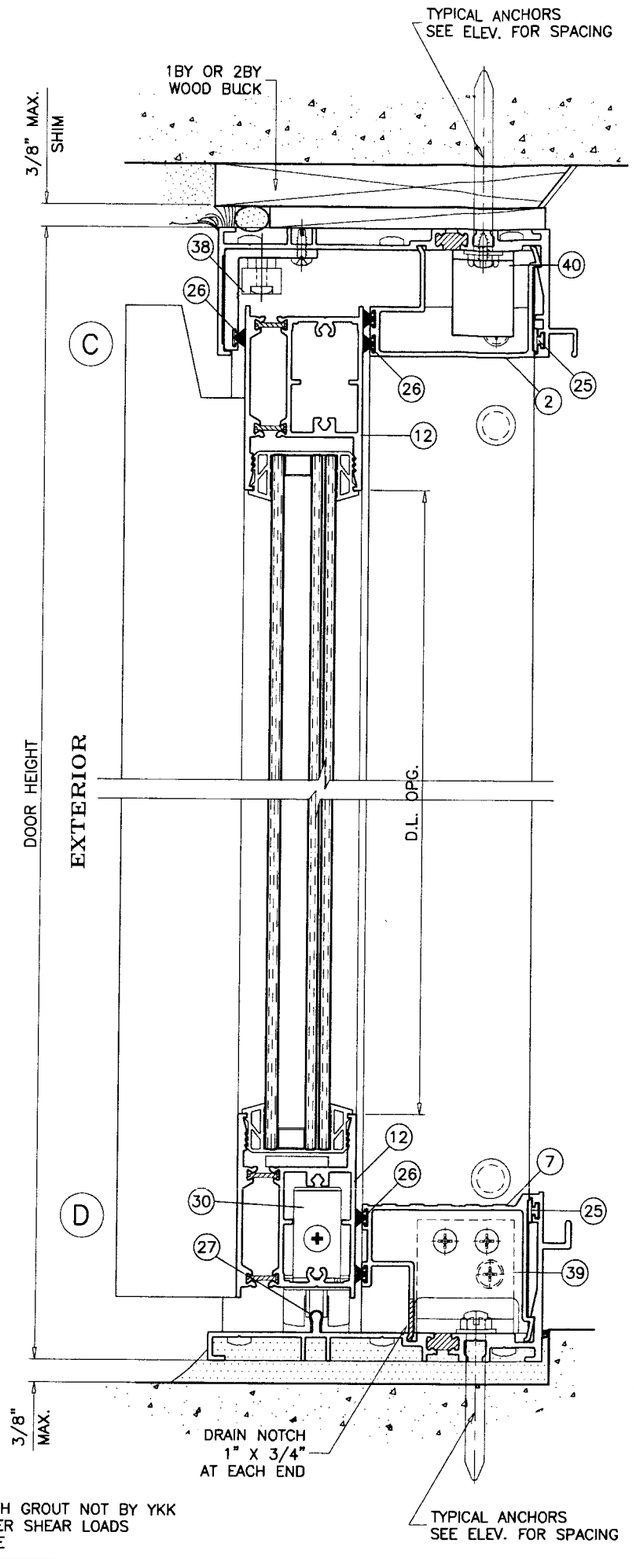

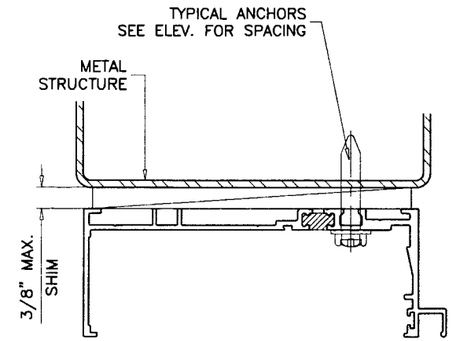

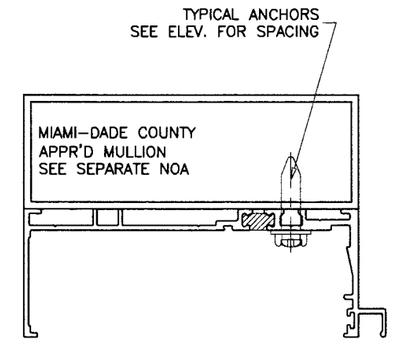

WOOD BUCKS AND METAL STRUCTURES NOT BY YKK AP, MUST SUPPORT LOADS IMPOSED BY GLAZING SYSTEM AND TRANSFER THEM TO THE BUILDING STRUCTURE.

TYPICAL ANCHORS: SEE ELEV. FOR SPACING

5/16" DIA TAPCONS

TYPE A1 INTO WOOD STRUCTURE
1-1/2" MIN. PENETRATION INTO WOOD
THRU 1BY OR 2BY WOOD BUCKS INTO MASONRY OR CONC.
1-1/4" MIN. EMBED INTO MASONRY OR CONC.

TYPE A2 DIRECTLY INTO CONCRETE OR MASONRY
1-1/4" MIN. EMBED INTO CONCRETE OR MASONRY

5/16" DRILLFLEX SELF DRILLING SCREWS

TYPE B INTO METAL STRUCTURES
STEEL : 12 GA. MIN. (Fy = 36 KSI MIN.)
ALUMINUM : 1/8" THK. MIN. (6063-T5 MIN.)
(STEEL IN CONTACT WITH ALUMINUM TO BE PLATED OR PAINTED)

#14 SMS

TYPE C INTO APPROVED MULLIONS (NO SHIM SPACE)

TYPICAL EDGE DISTANCE

INTO CONCRETE AND MASONRY = 2-3/16" MIN.
INTO WOOD STRUCTURE = 1" MIN.
INTO METAL STRUCTURE = 3/4" MIN.

SEALANTS:

FRAME AND PANEL CORNERS SEALED WITH TREMCO SPECTREM 2 OR G.E. SILGLAZE OR TREMCO TREMSIL 600 SEALANT.

Approved as complying with the Florida Building Code
Date 08/09/06
NOA# 06-0405.10
Miami-Dade Product Control Division
By

Engr: DR. HUMAYOUN FAROOQ
STRUCTURES
FLA. PE # 16557
C.A.N. 3538

JUL 25 2006

AL-FAROOQ CORPORATION
ENGINEERS, PLANNERS & PRODUCT DESIGN
1235 SW 87 AVE
MIAMI, FLORIDA 33174
TEL. (305) 264-8100 FAX. (305) 262-6978

COMP-ANL\W06-23YKK

YSD600TH ALUMINUM SLIDING GLASS DOOR (S.M.I.)

YKK AP AMERICA INC.
332 FIRETOWER ROAD
DUBLIN, GEORGIA 31021
TEL(478) 277-1955 FAX(478) 277-1978

revisions:			
no	date	by	description
A	06.21.06		REV. PER BCCO COMMENTS

date: 03-14-06
scale: 3/8" = 1"
dr. by: HAMID
chk. by:

drawing no.
W06-23

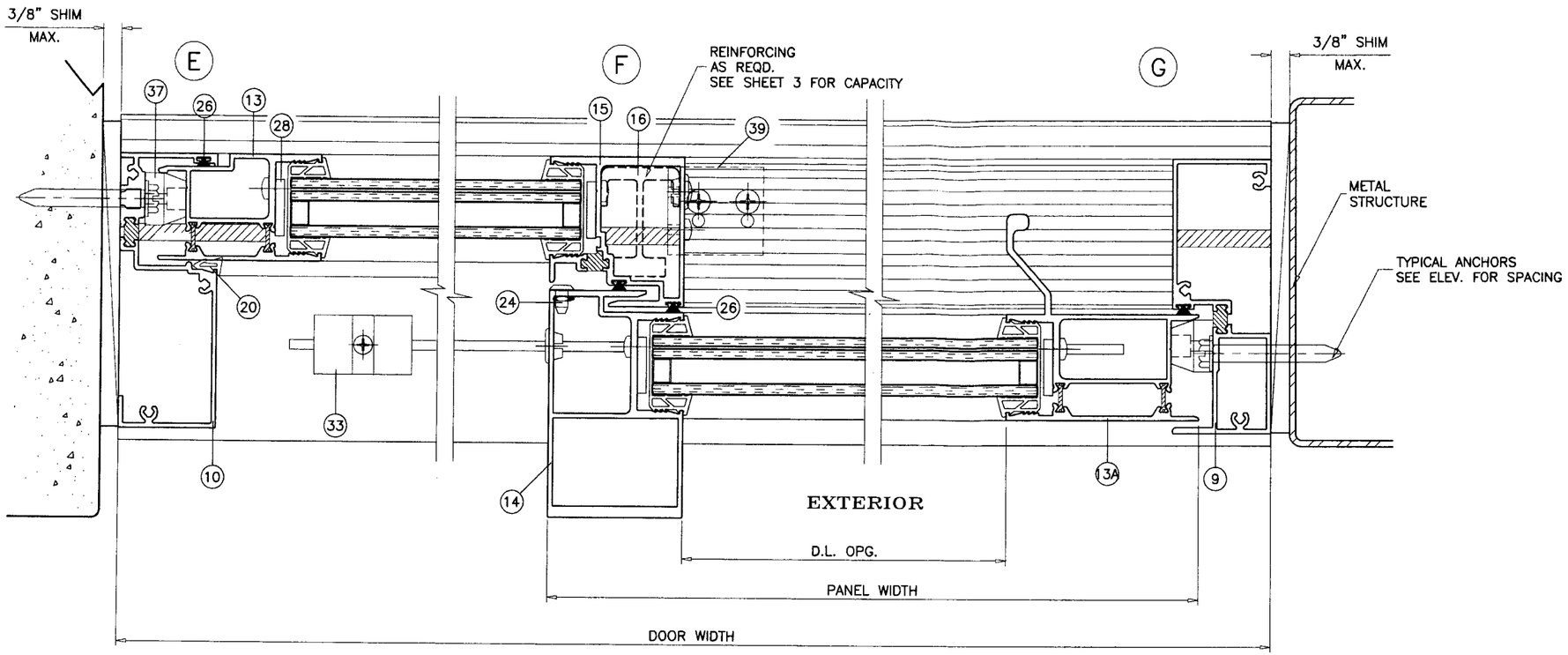

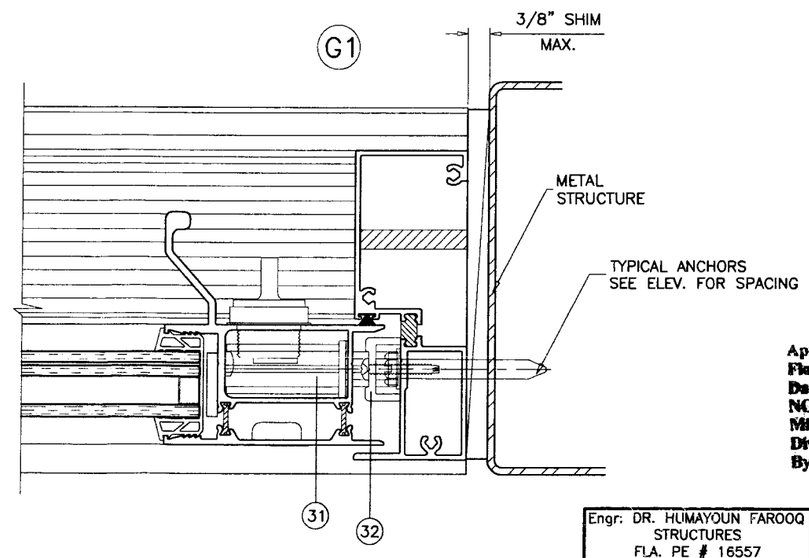

Approved as complying with the
Florida Building Code
Date 08/03/06
NOA# 06-0405.10
Miami-Dade Product Control
Division
By

Engr: DR. HUMAYOUN FAROOQ
STRUCTURES
FLA. PE # 16557
C.A.N. 3538

JUL 25 2006

AL-FAROOQ CORPORATION
ENGINEERS, PLANNERS & PRODUCT DESIGN
1235 SW 87 AVE
MIAMI, FLORIDA 33174
TEL. (305) 264-8100 FAX. (305) 262-6978
COMP-ANL\W06-23YKK

YSD600TH ALUMINUM SLIDING GLASS DOOR (S.M.I.)

YKK AP AMERICA INC.
332 FIRETOWER ROAD
DUBLIN, GEORGIA 31021
TEL(478) 277-1955 FAX(478) 277-1978

revisions:

no	date	by	description
A	06.21.06		NO CHANGE THIS SHEET

date: 03-14-06
scale: 3/8" = 1"
dr. by: HAMID
chk. by:

drawing no.
W06-23

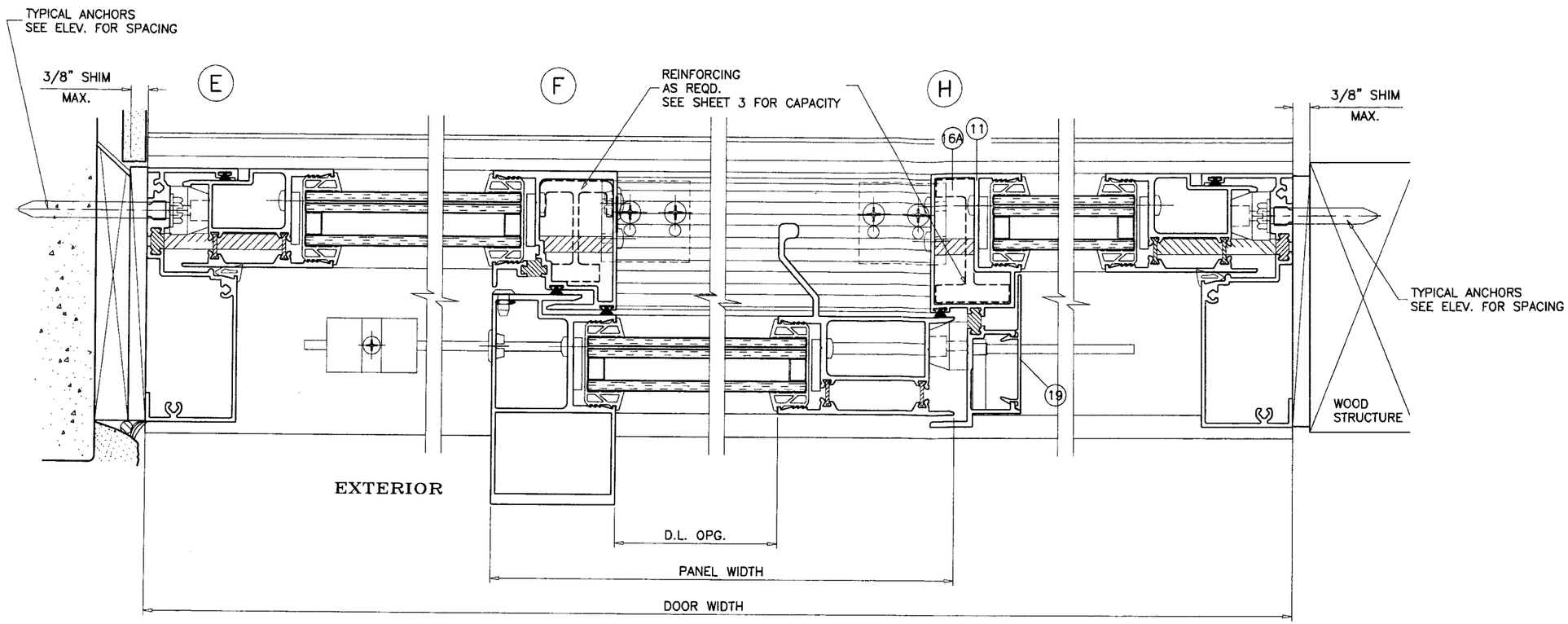

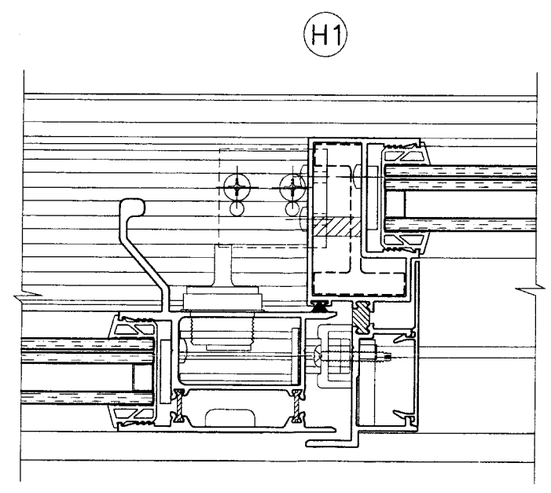

Approved as complying with the
Florida Building Code
Date 08/03/06
NOA# 06-0405.10
Miami-Dade Product Control
Division
By

Engr: DR. HUMAYOUN FAROOQ
STRUCTURES
FLA. PE # 16557
C.A.N. 3538

JUL 25 2006

AL-FAROOQ CORPORATION
ENGINEERS, PLANNERS & PRODUCT DESIGN
1235 SW 87 AVE
MIAMI, FLORIDA 33174
TEL. (305) 264-8100 FAX. (305) 262-6978
COMP-ANL\W06-23YKK

YSD600TH ALUMINUM SLIDING GLASS DOOR (S.M.I.)

YKK AP AMERICA INC.
332 FIRETOWER ROAD
DUBLIN, GEORGIA 31021
TEL.(478) 277-1955 FAX(478) 277-1978

revisions:

no	date	by	description
A	06.21.06		NO CHANGE THIS SHEET

date: 03-14-06
scale: 3/8" = 1"
dr. by: HAMID
chk. by:

drawing no.
W06-23

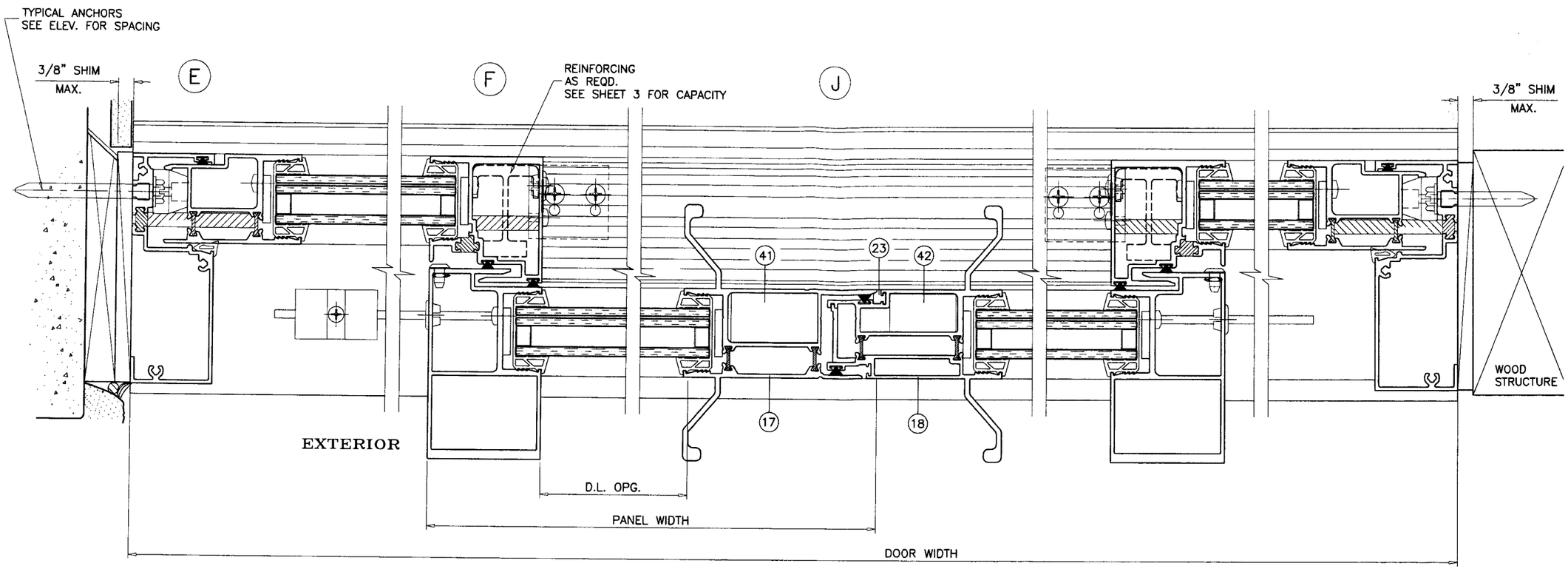

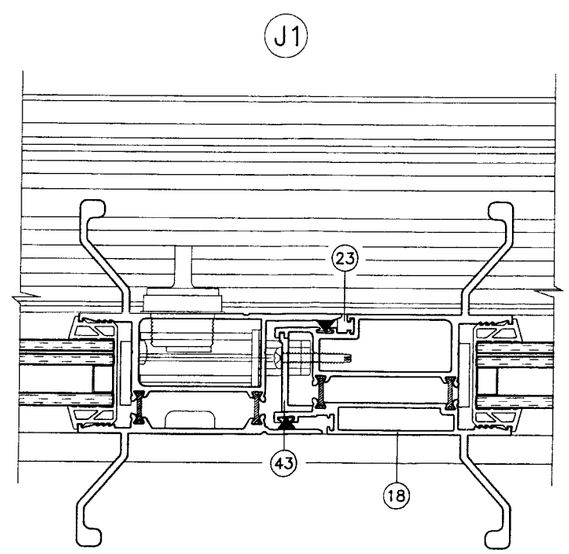

Approved as complying with the
Florida Building Code
Date 08/03/06
NOA# 06-0405.10
Miami-Dade Product Control
Division
By

Engr: DR. HUMAYOUN FAROOQ
STRUCTURES
FLA. PE # 16557
C.A.N. 3538

JUL 25 2006

AL-FAROOQ CORPORATION
ENGINEERS, PLANNERS & PRODUCT DESIGN
1235 SW 87 AVE
MIAMI, FLORIDA 33174
TEL. (305) 264-8100 FAX. (305) 262-6978

COMP-ANL\W06-23YKK

YSD600TH ALUMINUM SLIDING GLASS DOOR (S.M.I.)

YKK AP AMERICA INC.
332 FIRETOWER ROAD
DUBLIN, GEORGIA 31021
TEL.(478) 277-1955 FAX(478) 277-1978

revisions:

no	date	by	description
A	06.21.06		NO CHANGE THIS SHEET

date: 03-14-06
scale: 3/8" = 1"
dr. by: HAMID
chk. by:

drawing no.
W06-23

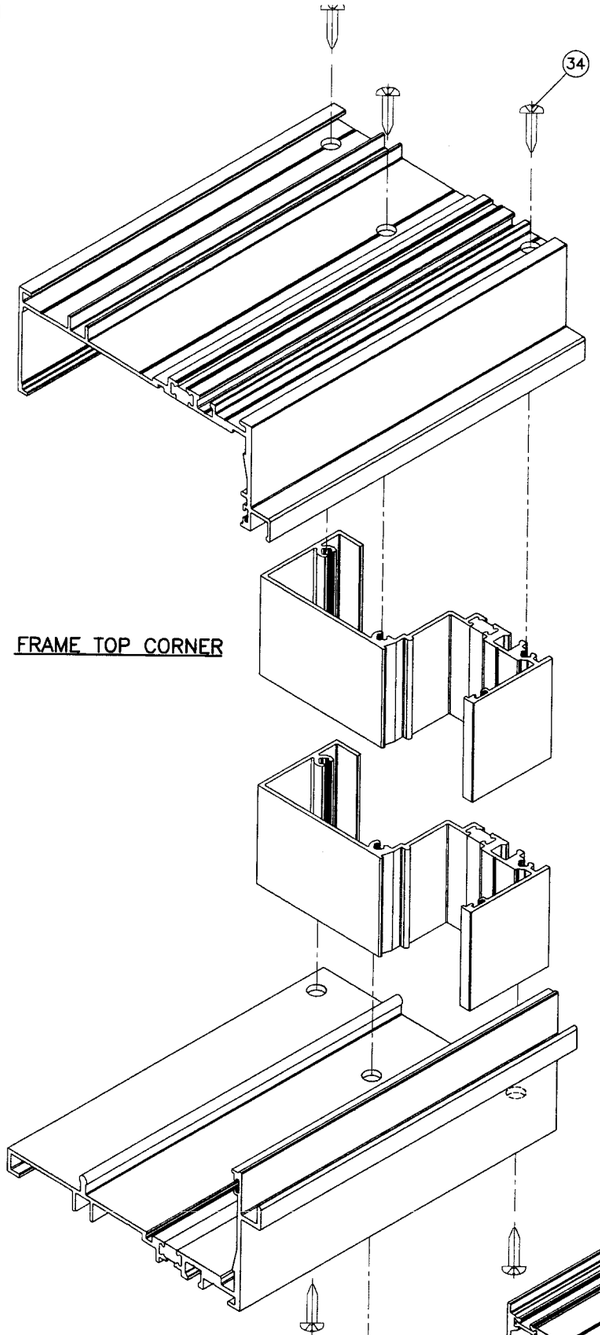

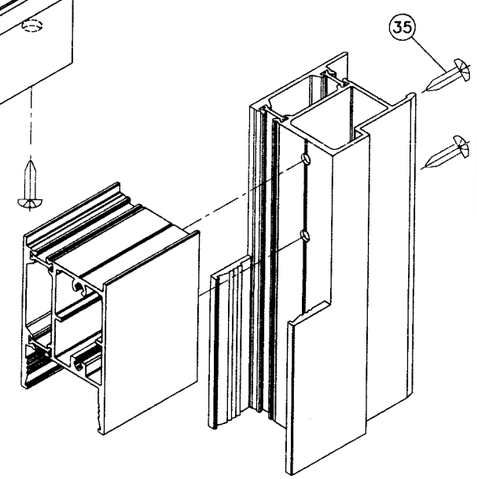

PANEL TOP/BOTTOM CORNER

ITEM #	PART #	QUANTITY	DESCRIPTION	MATERIAL	MANF./SUPPLIER/REMARKS
1	BE9-6201	1	FRAME HEAD	6063-T5	YKK AP AMERICA
2	E9-6211	1	HEAD ADAPTER (OPERABLE)	6063-T5	YKK AP AMERICA
3	E9-6213	1	EXTERIOR HEAD ADAPTER	6063-T5	YKK AP AMERICA
4	E9-6214	AS REQD.	INTERIOR HEAD ADAPTER (FIXED)	6063-T5	YKK AP AMERICA
5	–	–	–	–	–
6	BE9-6202	1	FRAME SILL	6063-T5	YKK AP AMERICA
7	E9-6212	1	SILL ADAPTER (OPERABLE)	6063-T5	YKK AP AMERICA
8	–	–	–	–	–
9	BE9-6204	AS REQD.	FRAME JAMB (OPERABLE)	6063-T5	YKK AP AMERICA
10	BE9-6203	1	FRAME JAMB (FIXED)	6063-T5	YKK AP AMERICA
11	BE9-6224	1	ASTRAGAL STILE	6063-T5	YKK AP AMERICA
12	BE9-6205	AS REQD.	TOP RAIL/ BOTTOM RAIL (OPERABLE)	6063-T5	YKK AP AMERICA
12A	BE9-6209	1/ PANEL	BOTTOM RAIL (FIXED)	6063-T5	YKK AP AMERICA
13	BE9-6206	1	JAMB STILE (FIXED)	6063-T5	YKK AP AMERICA
13A	BE9-6207	1	JAMB STILE (OPERABLE)	6063-T5	YKK AP AMERICA
14	E9-6210	AS REQD.	INTERLOCK (OPERABLE)	6063-T5	YKK AP AMERICA
15	BE9-6208	1	INTERLOCK (FIXED)	6063-T5	YKK AP AMERICA
16	E9-6294	AS REQD.	INTERLOCK REINFORCING	6063-T5	YKK AP AMERICA
16A	E9-6293	AS REQD.	ASTRAGAL REINFORCING	6063-T5	YKK AP AMERICA
17	BE9-6225	1	FEMALE LOCK STILE	6063-T5	YKK AP AMERICA
18	BE9-6226	1	MALE LOCK STILE	6063-T5	YKK AP AMERICA
19	E9-6231	1	ASTRAGAL COVER	6063-T5	YKK AP AMERICA
20	E2-0617	AS REQD.	WEDGE GASKET	EPDM	–
21	–	–	–	–	–
22	E2-0741	AS REQD.	GLAZING GASKET	EPDM	–
23	E2-0740	AS REQD.	MTG. STILE GASKET	EPDM	–
24	E3-1165	1/ MOV. PANEL	PANEL GUIDE	POLYAMIDE 6	–
25	E2-0051	AS REQD.	5/16" DIA. BULB W'STRIPPING	–	–
26	E2-0712	AS REQD.	PILE W'STRIPPING WITH FIN	POLYPROPYLENE	–
27	E1-1601	1	SILL TRACK COVER	ST. STEEL	–
28	E2-0177	AS REQD.	SETTING BLOCK/SIDE BLOCK	EPDM	–
29	–	–	–	–	–
30	E1-1620	2/ MOV. PANEL	BALL BEARING ROLLER	ST. STEEL	–
31	MS-1850S	1/ MOV. PANEL	MS LOCK ADAMS RITE		SECURED W/ (2) #10 FH SMS
32	E1-1618	1/ MOV. PANEL	STRIKE	–	SECURED W/ (2) #10 X 1-1/4" PH TS
33	E2-0709	2/ MOV. PANEL	HEAD/SILL BUMPER	EPDM	SECURED W/ #10 X 1-1/4" PH TS
34	#12 X 1-1/4"	3/ CORNER	FRAME ASSEMBLY SCREWS	ST. STEEL	PH SMS
35	#12 X 1-1/4"	2/ CORNER	PANEL ASSEMBLY SCREWS	ST. STEEL	PH SMS
36	–	–	–	–	–
37	E2-0705	2/ JAMB	AT BLOCK	EPDM	SECURED W/ #10 X 3/4" PH SCREW
38	E3-1162	2/ MOV. PANEL	STOPPER	POLYAMIDE 6	SECURED W/ #10 X 5/8" SMS
39	E1-1626	1/ FIX. PANEL	ANCHOR CLIP AT SILL	6063-T5	SECURED W/ #14 SCREWS 2/ SIDE
40	E1-1624	1/ FIX. PANEL	FIX. PANEL STOP AT HEAD	6063-T5	SECURED W/ #10 X 5/8" SMS
41	E1-1628	1	REINFORCING CLIP (AT OXXO ONLY)	6063-T5	SECURED W/ (4) #12 X 1" PH SMS
42	E1-1629	1	REINFORCING CLIP (AT OXXO ONLY)	6063-T5	SECURED W/ (3) #12 X 1" PH SMS
43	E1-1627	1	KEEPER 4" LONG (AT OXXO ONLY)	6063-T5	SECURED W/ (2) #10 X 1-1/4" PH SMS

Approved as complying with the Florida Building Code
Date 08/03/06
NOAS 06-0505.10
Miami-Dade Product Control Division
By

Engr: DR. HUMAYOUN FAROOQ
STRUCTURES
FLA. PE # 16537
C.A.N. 3538

JUL 25 2006

AL-FAROOQ CORPORATION
ENGINEERS, PLANNERS & PRODUCT DESIGN
1235 SW 87 AVE
MIAMI, FLORIDA 33174
TEL. (305) 264-8100 FAX. (305) 262-6978

COMP-ANL\W06-23YKK

YSD600TH ALUMINUM SLIDING GLASS DOOR (S.M.I.)

YKK AP AMERICA INC.
332 FIRETOWER ROAD
DUBLIN, GEORGIA 31021
TEL(478) 277-1955 FAX(478) 277-1978

revisions:			
no	date	by	description
A	06.21.06		NO CHANGE THIS SHEET

date: 03-14-06
scale: 3/8" = 1"
dr. by: HAMID
chk. by:

drawing no.
W06-23

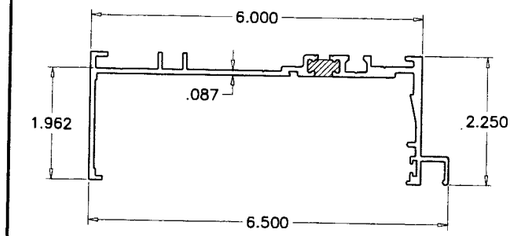

1 FRAME HEAD

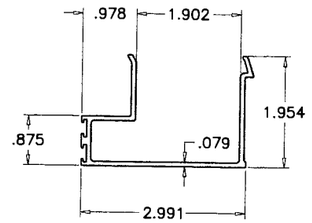

2 HEAD ADAPTER (OPERABLE)

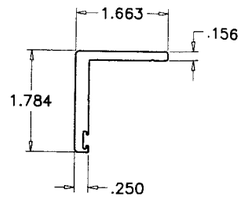

3 EXT. HEAD ADAPTER

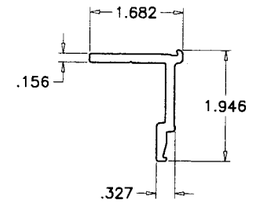

4 INT. HEAD ADAPTER (FIXED)

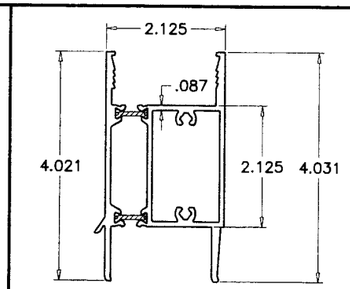

12A BOTTOM RAIL (FIXED)

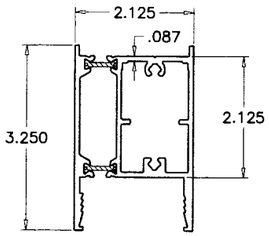

12 TOP RAIL/BOTTOM RAIL (OPERABLE)

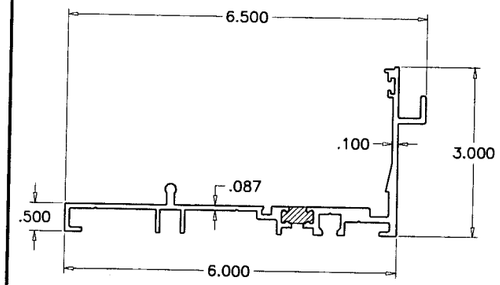

6 FRAME SILL

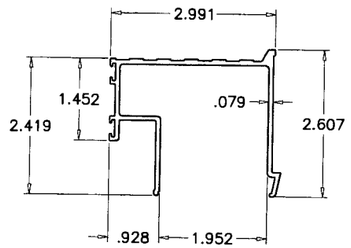

7 SILL ADAPTER (OPERABLE)

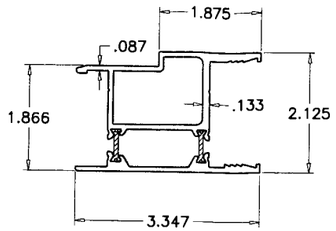

13 JAMB STILE (FIXED)

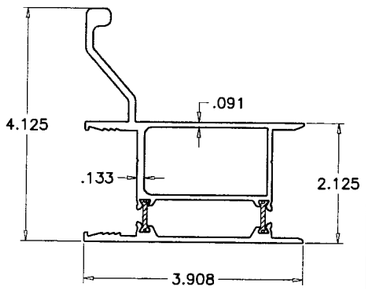

13A JAMB STILE (OPERABLE)

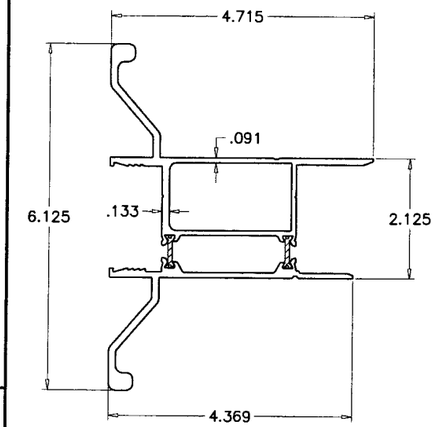

17 FEMALE LOCK STILE

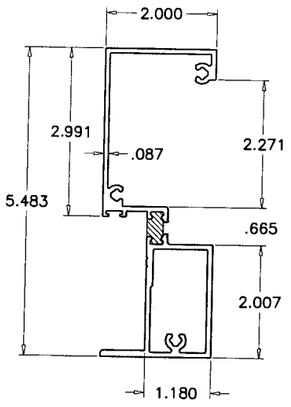

9 FRAME JAMB (OPERABLE)

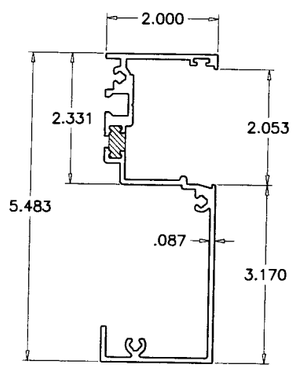

10 FRAME JAMB (FIXED)

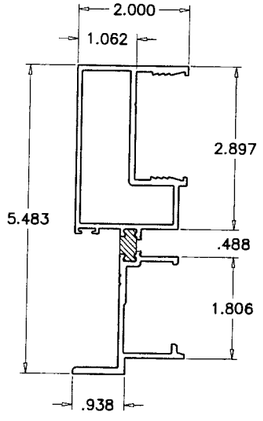

11 ASTRAGAL STILE

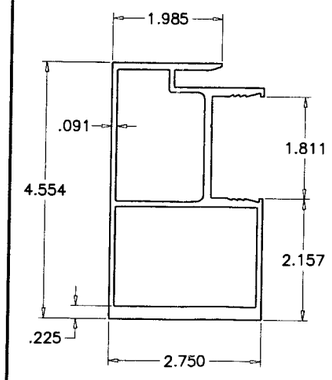

14 INTERLOCK (OPERABLE)

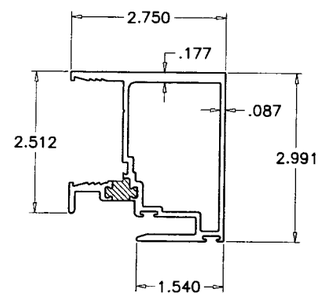

15 INTERLOCK (FIXED)

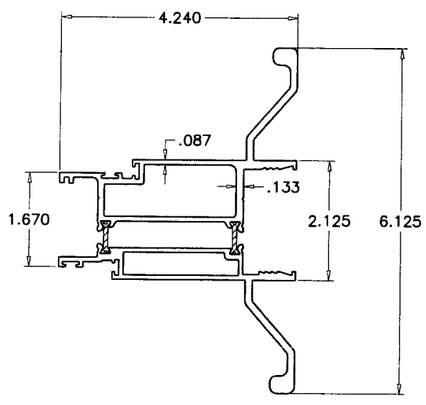

18 MALE LOCK STILE

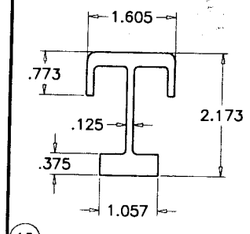

16 INTERLOCK REINFORCING

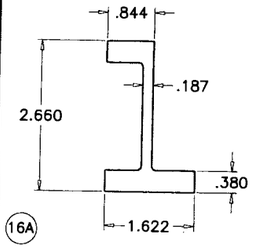

16A ASTRAGAL REINFORCING

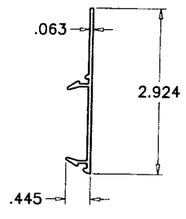

19 ASTRAGAL COVER

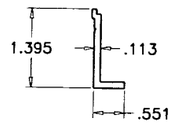

43 KEEPER

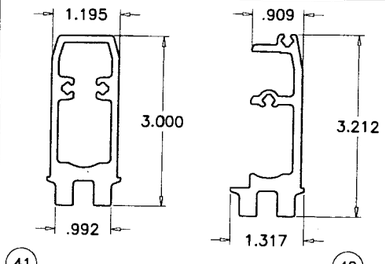

41 REINFORCING CLIPS 42

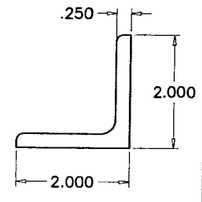

39 ANCHOR CLIP

Engr: DR. HUMAYOUN FAROOQ
STRUCTURES
FLA. PE # 16557
C.A.N. 3538

JUL 25 2006

Approved as complying with the Florida Building Code
Date 06/05/06
NOA# 06-0405.10
Miami-Dade County Product Control Division
By

AL-FAROOQ CORPORATION
ENGINEERS, PLANNERS & PRODUCT DESIGN
1235 SW 87 AVE
MIAMI, FLORIDA 33174
TEL. (305) 264-8100 FAX. (305) 262-6978
COMP-ANL\W06-23YKK

YSD600TH ALUMINUM SLIDING GLASS DOOR (S.M.I.)

YKK AP AMERICA INC.
332 FIRETOWER ROAD
DUBLIN, GEORGIA 31021
TEL.(478) 277-1955 FAX(478) 277-1978

revisions:

no	date	by	description
A	06.21.06		REV. PER BCCO COMMENTS

date: 03-14-06
scale: 3/8" = 1"
dr. by: HAMID
chk. by:

drawing no.
W06-23