MIAMI-DADE COUNTY

BUILDING CODE COMPLIANCE OFFICE (BCCO)
PRODUCT CONTROL DIVISION

MIAMI-DADE COUNTY, FLORIDA
METRO-DADE FLAGLER BUILDING
140 WEST FLAGLER STREET, SUITE 1603
MIAMI, FLORIDA 33130-1563
(305) 375-2901 FAX (305) 375-2908
www.buildingcodeonline.com

NOTICE OF ACCEPTANCE (NOA)

Stoam Holdings, LLC
1531 E. Bradford Parkway Suite 205
Springfield , MO 65804

SCOPE:
This NOA is being issued under the applicable rules and regulations governing the use of construction materials. The documentation submitted has been reviewed by Miami-Dade County Product Control Division and accepted by the Board of Rules and Appeals (BORA) to be used in Miami Dade County and other areas where allowed by the Authority Having Jurisdiction (AHJ).
This NOA shall not be valid after the expiration date stated below. The Miami-Dade County Product Control Division (In Miami Dade County) and/or the AHJ (in areas other than Miami Dade County) reserve the right to have this product or material tested for quality assurance purposes. If this product or material fails to perform in the accepted manner, the manufacturer will incur the expense of such testing and the AHJ may immediately revoke, modify, or suspend the use of such product or material within their jurisdiction. BORA reserves the right to revoke this acceptance, if it is determined by Miami-Dade County Product Control Division that this product or material fails to meet the requirements of the applicable building code.
This product is approved as described herein, and has been designed to comply with the Florida Building Code, including the High Velocity Hurricane Zone.

DESCRIPTION: "Stoam Insulated" Steel Wall Panel – L. M. I.

APPROVAL DOCUMENT: Drawing No. **W-001-3**, titled "Stoam Insulated Steel Wall Panel Large Missile Impact Resistant", sheets 1 through 6 of 6, dated 03/13/06 with revision 3 dated 08/10/06, prepared, signed and sealed by Eric J. Tompos, P.E., bearing the Miami-Dade County Product Control Approval stamp with the Notice of Acceptance number and approval date by the Miami-Dade County Product Control Division.

MISSILE IMPACT RATING: Large and Small Missile Impact Resistant

LABELING: Each unit shall bear a permanent label with the manufacturer's name, City, State and the following statement: "**Miami-Dade County Product Control Approved**".

RENEWAL of this NOA shall be considered after a renewal application has been filed and there has been no change in the applicable building code negatively affecting the performance of this product.

TERMINATION of this NOA will occur after the expiration date or if there has been a revision or change in the materials, use, and/or manufacture of the product or process. Misuse of this NOA as an endorsement of any product, for sales, advertising or any other purposes shall automatically terminate this NOA. Failure to comply with any section of this NOA shall be cause for termination and removal of NOA.

ADVERTISEMENT: The NOA number preceded by the words Miami-Dade County, Florida, and followed by the expiration date may be displayed in advertising literature. If any portion of the NOA is displayed, then it shall be done in its entirety.

INSPECTION: A copy of this entire NOA shall be provided to the user by the manufacturer or its distributors and shall be available for inspection at the job site at the request of the Building Official.
This NOA consists of this page 1 and evidence pages E-1 and E-2, as well as approval document mentioned above.
The submitted documentation was reviewed by **Jaime D. Gascon, P.E.**

PRODUCT CONTROL ACCEPTED

J. Gascon
2/20/07

Stoam Insulated Steel Wall Panel

NOTICE OF ACCEPTANCE: EVIDENCE SUBMITTED

A. DRAWINGS

1. Manufacturer's die drawings and sections.
2. Drawing No. **W-001-3**, titled "Stoam Insulated Steel Wall Panel Large Missile Impact Resistant", sheets 1 through 6 of 6, dated 03/13/06 with revision 3 dated 08/10/06, prepared, signed and sealed by Eric J. Tompos, P.E.,

B. TESTS

1. Test report on: 1) Air Infiltration Test, per FBC, TAS 202-94
   2) Uniform Static Air Pressure Test, Loading per FBC, TAS 202-94
   3) Water Resistance Test, per FBC, TAS 202-94
   4) Large Missile Impact Test per FBC, TAS 201-94
   5) Cyclic Wind Pressure Loading per FBC, TAS 203-94

   along with marked-up drawings and installation diagram of the Stoam Insulated Steel Wall Panel, prepared by Hurricane Test Laboratory, LLC., Test Report No. **HTL-GA06001**, dated May 04, 2006, signed and sealed by Vinu J. Abraham, P.E.
2. Test report on:
   1) Ignition Properties of Plastic Test per ASTM D 1929-96 (Reap.2001)

   along with marked-up drawings and installation diagram of the Stoam Insulated Steel Wall Panel, prepared by Intertek Testing Services NA, Inc., Test Report No. **Intertek # 3082959-500, Rev. # 01**, dated January 17, 2007, signed and sealed by Chris Bowness, P.E.
3. Test report on:
   1) Surface Burning Characteristics of Building Materials per ASTM E 84 -05

   along with marked-up drawings and installation diagram of the Stoam Insulated Steel Wall Panel, prepared by Intertek Testing Services NA, Inc., Test Report No. **Intertek # 3082960-500, Rev. # 01**, dated October 04, 2005, signed and sealed by Chris Bowness, P.E.

C. CALCULATIONS

None

D. QUALITY ASSURANCE

1. Miami Dade Building Code Compliance Office (BCCO).

E. MATERIAL CERTIFICATIONS

1. None

Jaime D. Gascon, P.E.
Chief, Product Control Division
NOA No 06-0405.11
Expiration Date: March 15, 2012
Approval Date: March 15, 2007

NOTICE OF ACCEPTANCE: EVIDENCE SUBMITTED

F. STATEMENTS

1. Statement letter of Compliance and "No Financial Interest", dated 03/24/06, signed and sealed Eric J. Tompos, P.E.
2. Testing Program Letter by HTL signed by Vinu J. Abraham, P.E.
3. Statement letter of Compliance and "No Financial Interest", dated 03/29/06, signed and sealed Grant Courtney, P.E.

G. OTHER

1. Test report on:

1) ASTM E – 564, Standard Practice for Static Load Test for Shear Resistance of Framed Walls for Buildings.

along with marked-up drawings and installation diagram of the Stoam Insulated Steel Wall Panel, prepared by NTA, Inc., Test Report No. **STM 0322306-20**, dated April 04, 2006, signed and sealed by Eric J. Tompos, P.E.

Jaime D. Gascon, P.E.
Chief, Product Control Division
NOA No 06-0405.11
Expiration Date: March 15, 2012
Approval Date: March 15, 2007

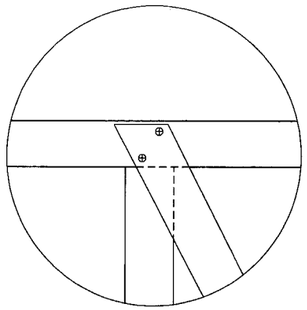

DETAIL-A
SCALE: 5X

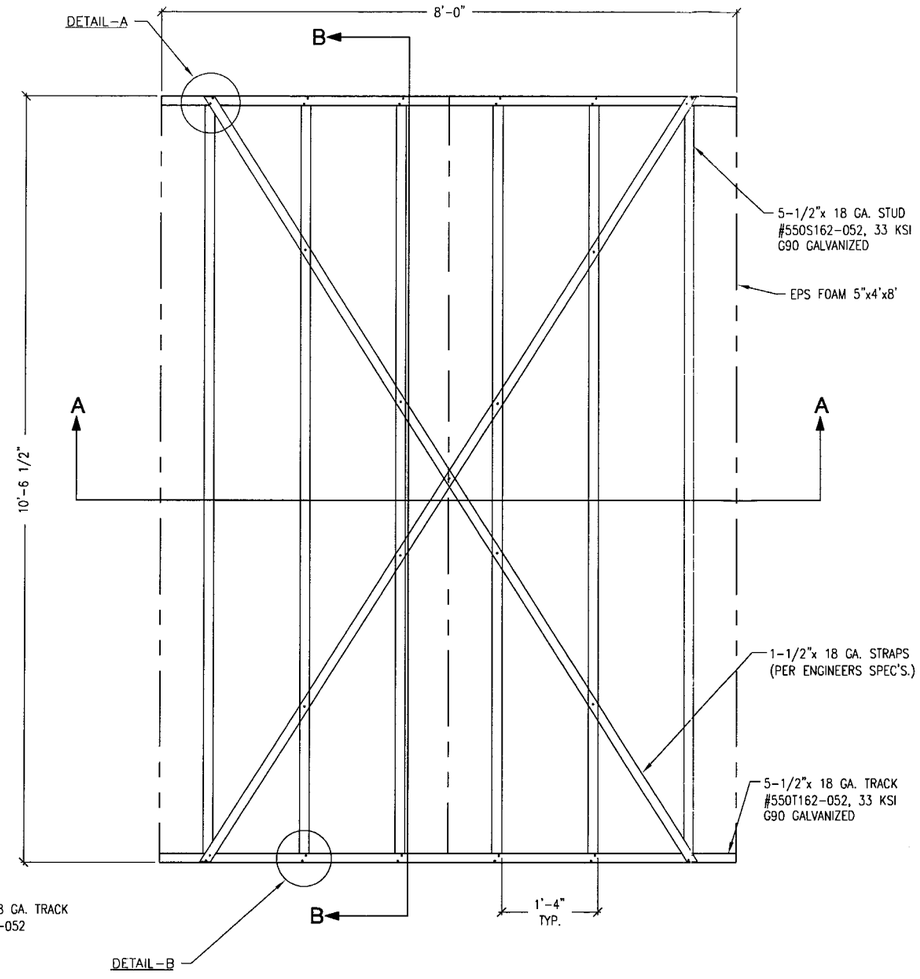

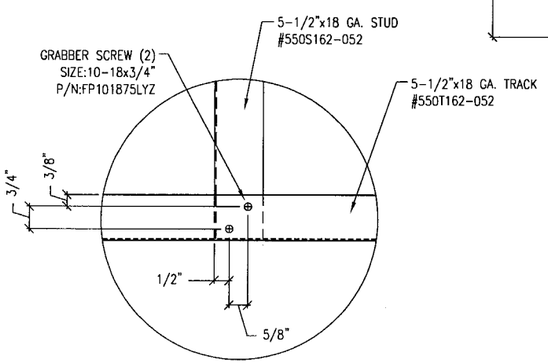

DETAIL-B

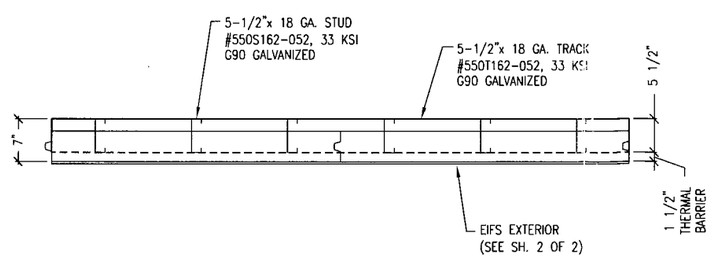

SECTION A-A

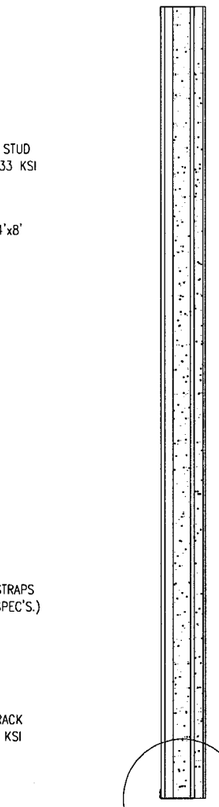

DETAIL-C

DESIGN PRESSURE RATING
± 65 P.S.F.

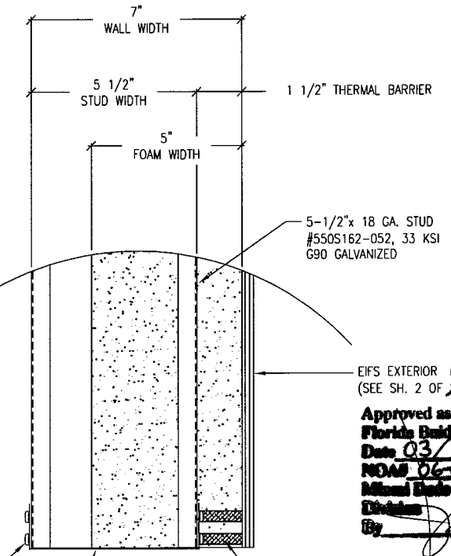

DETAIL-C
SCALE: 5X

Approved as complying with the Florida Building Code
Date 03/15/2007
NOA# 06-0405.11
Miami-Dade Product Control Division
By

Eric J. Tompos, PE
Florida Registration No. 63511
NTA, Inc. (COA8463)
P.O. Box 490
Nappanee, IN 46550

9/12/06

RELEASE/REVISION

REV	DATE	NAME	DESCRIPTION
3	08-10-06	WRB	ADDED DETAILS
1	04-21-06	WRB	NAME CHANGE
2	07-14-06	WRB	REVISED PER FBC OFFICE

STOAM INSULATED STEEL WALL PANEL INTERIOR VIEW

STOAM
The Ultimate in Steel Frame Construction

TOLERANCES UNLESS NOTED OTHERWISE
FRACTION --- ±1/16"
.XX ------- ±.03
.XXX ------ ±.005
.XXXX ----- ±.0010
ANGULAR --- ± 1°

DATE	DRAWN BY	CHECKED BY
03-13-06	WRB	WRB

PROJECT: STOAM SPEC'S
MATERIAL: SEE ABOVE
PART/DWG NO.: W-001-3
DRAWING: EIFS EXTERIOR COATING
SHEET: 1 OF 6

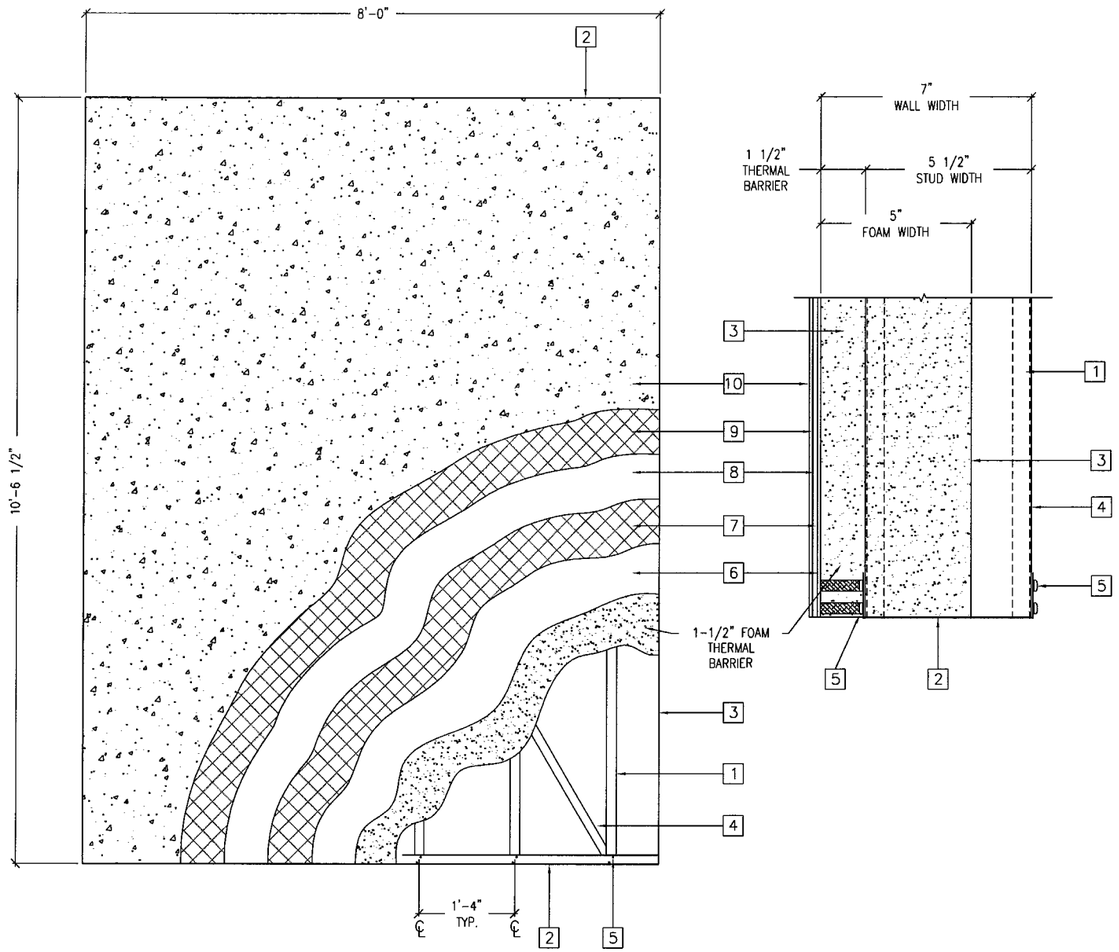

1 5-1/2"x18 GA.,#550S162-52, 33KSI, G90 GALVANIZED STUD @ 16" O.C.

2 5-1/2"x18 GA.,#550T162-52, 33KSI, G90 GALVANIZED TRACK, TOP & BOTTOM

3 5" THICK EXPANDED POLYSTYRENE (EPS) FOAM, TYPE II (1.50 lb/ft^3 MIN. DENSITY) BY INSULFOAM NOA #FL 2256

4 (2)1-1/2"x 18 GA. CROSS STRAPS ATTACHED @ CORNERS OF END STUDS W/(2) 10-18x3/4", (1) 10-18x3/4" @ REMAINING STUDS.

5 GRABBER SCREW-SIZE:10-18x3/4"L., P/N:FP101875LYZ, YELLOW ZINC LOX DRIVE PAN HEAD SCREW (2) AT FRONT AND (2) AT BACK SIDE OF WALL

6 DRYVIT-PRIMUS 100% POLYMER 1st BASE COAT, MIN. THK.=MESH FULLY EMBEDDED (3/32"MIN.)

7 DRYVIT-PANZER 20* 570g, (20-oz./SQ.YD.) GLASS FIBER MESH IMBEDDED IN 1st BASE COAT.

8 DRYVIT-PRIMUS 100% POLYMER 2nd BASE COAT, MIN. THK.=MESH FULLY EMBEDDED (3/32"MIN.)

9 DRYVIT-STANDARD 120g, (4.3-oz./SQ.YD.) GLASS FIBER MESH IMBEDDED IN 2nd BASE COAT.

10 DRYVIT-DPR AGGREGATE TEXTURED 100% ACRYLIC-BASED FINISH. (3/32" MIN. THK.)

Eric J. Tompos, PE
Florida Registration No. 63511
NTA, Inc. (COA8463)
P.O. Box 490
Nappanee, IN 46550

9/12/06

DESCRIPTION

1.1 SUBSTRATES APPROVED WITH THE SYSTEM:

1.1.1 STUDS:
5-1/2" X 1-5/8" X 18 GA. STEEL STUDS
(33 KSI G90 Galvanized) @ 16" O.C..
– MANUFACTURED IN ACCORDANCE TO AISI STANDARDS.

1.1.2 TRACK:
5-1/2" X 1-1/4" X 18 GA. STEEL TRACK
(33 KSI G90 GALVANIZED) TOP AND BOTTOM.
– MANUFACTURED IN ACCORDANCE TO AISI STANDARDS.

1.1.3 CROSS-BRACE STRAPS:
1-1/2" X 18 GA. STEEL STRAPS

1.1.4 FASTENERS:
GRABBER LOX DRIVE 10-18 x 3/4"
PAN HEAD SCREWS (2 PER CONNECTION).

1.1.5 EPS FOAM: BY INSULFOAM NOA #FL 2256
MINIMUM 5" THICK AND TYPE II (1.50 PCF) DENSITY
PER ASTM TESTS C303 OR D1622.
(INCUDES 1-1/2" THERMAL BREAK AT EXTERIOR).

1.1.6 BASECOAT:
(DRYVIT) PRIMUS 100% POLYMER BASED ADHESIVE MIXED
1:1 WITH PORTLAND CEMENT.

1.1.7 GLASS FIBER MESH:
STANDARD (4.3 OZ.) AND PANZER 20 (20 OZ.)

1.1.8 FINISH COAT:
(DRYVIT) PRE-MIXED, AGGREGATE TEXTURED, 100%
ACRYLIC-BASED COATING.

1.2 PANELIZATION:

1.2.1 STEEL STUDS ARE ENGULFED IN 3-1/2" OF THE EPS FOAM LEAVING A 1-1/2" THERMAL BREAK ON THE EXTERIOR AND 2" MAINTENANCE ACCESS BETWEEN THE FOAM AND TRACK FLANGE ON THE INTERIOR.

1.2.2 STUDS AND TRACK ARE FASTENED AT TOP AND BOTTOM LOCATIONS WITH GRABBER LOX SCREWS.

1.2.3 CROSS STRAPS ARE ATTACHED DIAGONALLY AT 8 FT. FROM CORNER TO CORNER AND FASTENED WITH GRABBER LOX SCREWS TO EVERY STUD.

1.3 PREPARATION

1.3.1 SURFACE PREPARATION:
EPS THERMAL BREAK IS TO BE SANDED FLAT TO WITHIN 1/4" IN ANY 4' RADIUS AND THEN CLEANED FREE OF DEBRIS.

1.3.2 MIXING:
A) THE PRIMUS IS TO BE MIXED THOROUGHLY WITH TYPE I OR TYPE II PORTLAND CEMENT AT A 1:1 RATIO.
B) ALLOW TO SET FOR 5 MINUTES AND ADD WATER AS NEEDED FOR DESIRED WORKABILITY.

1.3.2.1 WORKING TIME IS APPROXIMATELY 1 HOUR DEPENDING ON AMBIENT CONDITIONS.

Approved as complying with the Florida Building Code
Date 03/15/2007
NOA# 06-0403.11
Miami-Dade Product Control
Details
By

GENERAL NOTES

1) THIS SYSTEM HAS BEEN DESIGNED IN ACCORDANCE WITH THE FLORIDA BUILDING CODE 2004 EDITION AND IT'S LATEST SUPPLEMENT.

2) THIS SYSTEM HAS BEEN TESTED IN ACCORDANCE WITH THE DADE COUNTY PROTOCOL TAS201, TAS202 AND TAS203 IMPACT STRUCTURAL AND CYCLIC TESTING.

3) THIS SYSTEM SHALL BE APPLIED BY A LICENSED PLASTERING CONTRACTOR FOLLOWING THE RECOMMENDATIONS OF STOAM L.L.C., THIS NOTICE OD ACCEPTANCE AND THE APPLICABLE SECTIONS OF THE FLORIDA BUILDING CODE.

4) THE ENGINEER AND/OR ARCHITECT OF RECORD FOR EACH PROJECT USING THIS SYSTEM SHALL SIZE ALL STUD FRAMING TO ENSURE CONFORMANCE WITH STUD DEFLECTION AND STRESS LIMITATIONS AS REQUIRED BY GOVERNING CODES AND THIS DOCUMENT.

5) ALL STEEL STUDS SHALL BE STRUCTURAL, 5-1/2" MIN. WEB WIDTH x 1-5/8" MIN. FLANGE WIDTH AND HAVE A MINIMUM YIELD STRENGTH OF 33,000 PSI (33KSI).

6) THIS STUCCO SYSTEM SHALL NOT BE CONSIDERED TO OR BE USED FOR TRANSFER OF DIAPHRAM ACTION OF WALL TO STRUCTURE.

7) DETAILS ON SHEETS 3 THROUGH 6 ARE TYPICAL AND SHOW INTENT TO PREVENT WATER INFILTRATION INTO AND BEHIND THIS SYSTEM. ALTERNATE DETAILING AND SPECIFIC CONDITIONS NOT COVERED BY THE TYPICAL DETAILS ARE THE RESPONSIBILITY OF THE LICENSED DESIGN PROFESSIONAL IN CONSULTATION WITH STOAM.

8) THIS APPROVAL DOES NOT INCLUDE HORIZONTAL USE OF THIS SYSTEM. IT ONLY INCLUDES WALL APPLICATION.

1.4 APPLICATION

1.4.1 FIRST BASE COAT:
USE A TROWEL TO SPREAD A RIBBON OF PRIMUS MIXTURE 2-3 INCHES WIDE BY 3/8" THICK AROUND THE PERIMETER AND 4" X 3/8" DABS EVERY 8 INCHES ON CENTER TO THE INTERIOR AREA.

1.4.2 STANDARD 4.3 OZ. MESH:
EMBED THE MESH IN THE WET BASE COAT TROWELING FROM THE CENTER TO THE EDGES TO WORK OUT ALL WRINKLES.
THE MESH IS TO BE CONTINUOUS OR OVERLAPPED AT THE CORNERS IN ACCORDANCE WITH THE FINISH MANUFACTURER'S SPECIFICATIONS.
(A) THE OVERALL MINIMUM BASE COAT THICKNESS IS TO BE SUFFICIENT TO FULLY EMBED THE MESH.
(B) APPROXIMATE DRYING TIME IS 24 HOURS DEPENDING ON AMBIENT CONDITIONS.
(C) ALLOW FIRST BASE COAT TO DRY COMPLETELY BEFORE APPLYING SECOND BASE COAT.

1.4.3 SECOND (FINAL) BASE COAT:
APPLY THE PRIMUS MIXTURE TO THE ENTIRE SURFACE AT A UNIFORM THICKNESS NOT TO EXCEED 1/8".

1.4.4 PANZER 20 OZ. MESH:
IMMEDIATELY EMBED THE PANZER MESH INTO THE SECOND BASE COAT AND TROWEL FROM THE CENTER TO THE EDGES UNTIL THE MESH IS FULLY COVERED AND NOT VISIBLE.
THE MESH IS TO BE BUTTED INTO AND NOT OVERLAPPED AT ADJACENT EDGES IN ACCORDANCE WITH THE FINISH MANUFACTURER'S SPECIFICATIONS.
(A) APPROXIMATE DRYING TIME IS 24 HOURS DEPENDING ON AMBIENT CONDITIONS.
(1) EXAMINE FOR PROJECTIONS AND CORRECT AS NECESSARY TO PRODUCE A FLAT SURFACE.

1.4.5 FINISH COAT:
THOROUGHLY MIX DRYVIT FINISH UNTIL A WORKABLE CONSISTENCY IS ATTAINED.
APPLY WITH A STAINLESS STEEL TROWEL TO A UNIFORM THICKNESS SLIGHTLY LARGER THAN THE LARGEST AGGREGATE OF THE MATERIAL.

PULL THE FINISH MATERIAL TO CREATE THE DESIRED DESIGN.

RELEASE/REVISION

REV	DATE	NAME	DESCRIPTION
3	08-10-06	WRB	ADDED DETAILS
1	04-21-06	WRB	NAME CHANGE
2	07-14-06	WRB	REVISED PER FBC OFFICE

STOAM INSULATED STEEL WALL PANEL EXTERIOR VIEW

STOAM
The Ultimate in Steel Frame Construction

TOLERANCES UNLESS NOTED OTHERWISE
FRACTION --- ±1/16"
.XX ------- ±.03
.XXX ------ ±.005
.XXXX ----- ±.0010
ANGULAR --- ± 1°

DATE 03-13-06	DRAWN BY WRB	CHECKED BY WRB
PROJECT STOAM SPEC'S		
MATERIAL SEE ABOVE		PART/DWG NO. W-001-3
DRAWING EIFS EXTERIOR COATING		SHEET 2 OF 6

NOTE:
1. DRYVIT RECOMMENDS THAT GROUND FLOOR APPLICATIONS AND ALL FACADES EXPOSED TO ABNORMAL STRESS, HIGH TRAFFIC, OR DELIBERATE IMPACT HAVE THE BASE COAT REINFORCED WITH PANZER® MESH PRIOR TO STANDARD™ OR STANDARD PLUS™ MESH. LOCATION OF HIGH IMPACT ZONES SHOULD BE INDICATED ON CONTRACT DRAWINGS.
2. FLASHING SHOULD OVERLAP EIFS MIN. 2 1/2" MEASURED FROM THE TOP OF THE EPS
3. APPLY DRYVIT AQUAFLASH OR FLASHING TAPE SURFACE CONDITIONER™ AND DRYVIT FLASHING TAPE™ AT SILL

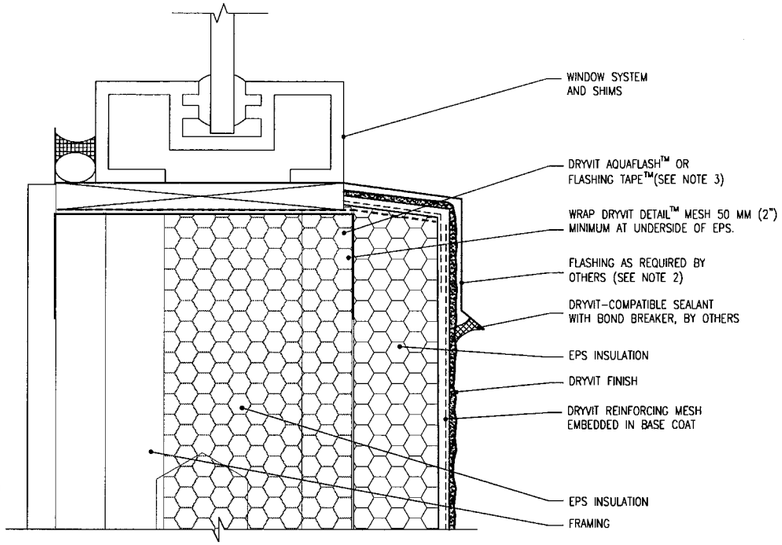

TERMINATION AT SILL ALUMINUM FRAME

The architecture, engineering and design of the project using the Stoam and Dryvit products is the responsibility of the project's design professional. All systems must comply with local building codes and standards. This detail is for general information and guidance only and Stoam specifically disclaims any liability for the use of this detail and for the architecture, design, engineering or workmanship of any project. The project design professional determines, in its sole discretion, whether this detail or a functionally equivalent alternative is best suited for the project.

NOTE:
1. DRYVIT RECOMMENDS THAT GROUND FLOOR APPLICATIONS AND ALL FACADES EXPOSED TO ABNORMAL STRESS, HIGH TRAFFIC, OR DELIBERATE IMPACT HAVE THE BASE COAT REINFORCED WITH PANZER® MESH PRIOR TO STANDARD™ OR STANDARD PLUS™ MESH. LOCATION OF HIGH IMPACT ZONES SHOULD BE INDICATED ON CONTRACT DRAWINGS.
2. SEALANT SHOULD NOT BE DIRECT CONTACT WITH FLASHING MATERIAL ADHESIVE, STAINING COULD OCCUR
3. APPLY DRYVIT AQUAFLASH OR FLASHING TAPE SURFACE CONDITIONER™ AND DRYVIT FLASHING TAPE™ AT JAMBS

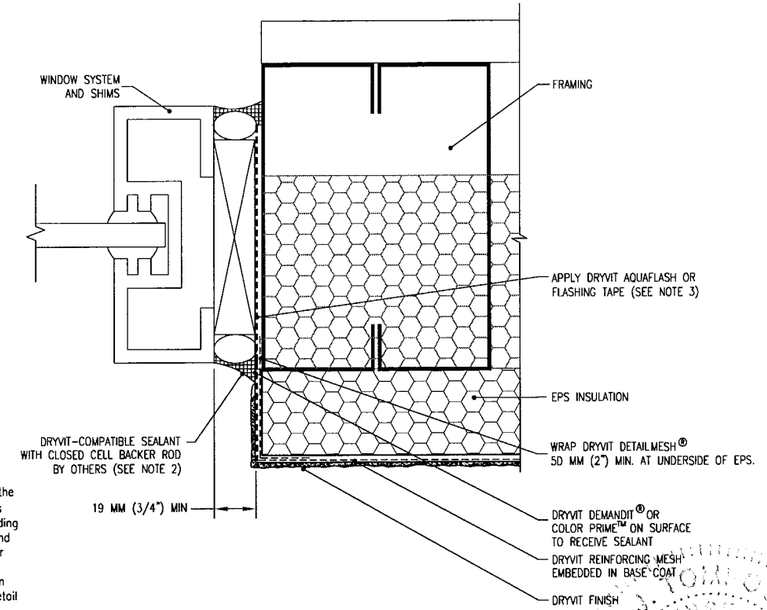

TERMINATION AT JAMB ALUMINUM FRAME

The architecture, engineering and design of the project using the Stoam and Dryvit products is the responsibility of the project's design professional. All systems must comply with local building codes and standards. This detail is for general information and guidance only and Stoam specifically disclaims any liability for the use of this detail and for the architecture, design, engineering or workmanship of any project. The project design professional determines, in its sole discretion, whether this detail or a functionally equivalent alternative is best suited for the project.

NOTE:
1. DRYVIT RECOMMENDS THAT GROUND FLOOR APPLICATIONS AND ALL FACADES EXPOSED TO ABNORMAL STRESS, HIGH TRAFFIC, OR DELIBERATE IMPACT HAVE THE BASE COAT REINFORCED WITH PANZER® MESH PRIOR TO STANDARD™ OR STANDARD PLUS™ MESH. LOCATION OF HIGH IMPACT ZONES SHOULD BE INDICATED ON CONTRACT DRAWINGS.
2. EXPANSION JOINT IS NEEDED AT FLOOR LINE IF SYSTEM EXTENDS MORE THAN 610 MM (2'-0") BELOW TOP OF FOUNDATION.
3. SLOPE GRADE AWAY FROM WALL.
4. STOP FINISH APPROXIMATELY 50 MM (2") BELOW GRADE.

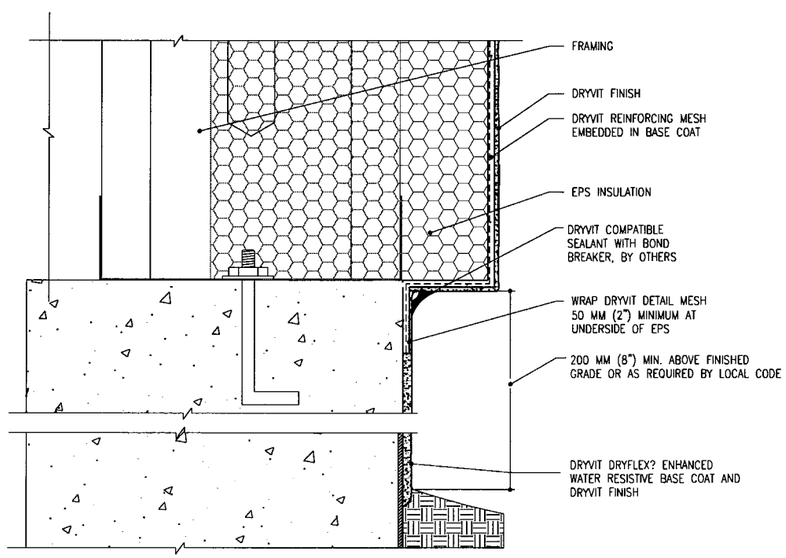

FOUNDATION – TERMINATION ABOVE GRADE

The architecture, engineering and design of the project using the Stoam and Dryvit products is the responsibility of the project's design professional. All systems must comply with local building codes and standards. This detail is for general information and guidance only and Stoam specifically disclaims any liability for the use of this detail and for the architecture, design, engineering or workmanship of any project. The project design professional determines, in its sole discretion, whether this detail or a functionally equivalent alternative is best suited for the project.

NOTE:
1. DRYVIT RECOMMENDS THAT GROUND FLOOR APPLICATIONS AND ALL FACADES EXPOSED TO ABNORMAL STRESS, HIGH TRAFFIC, OR DELIBERATE IMPACT HAVE THE BASE COAT REINFORCED WITH PANZER® MESH PRIOR TO STANDARD™ OR STANDARD PLUS™ MESH. LOCATION OF HIGH IMPACT ZONES SHOULD BE INDICATED ON CONTRACT DRAWINGS.
2. APPLY DRYVIT AQUAFLASH OR FLASHING TAPE SURFACE CONDITIONER™ AND DRYVIT FLASHING TAPE™ (REFER TO OS 0.0.04)

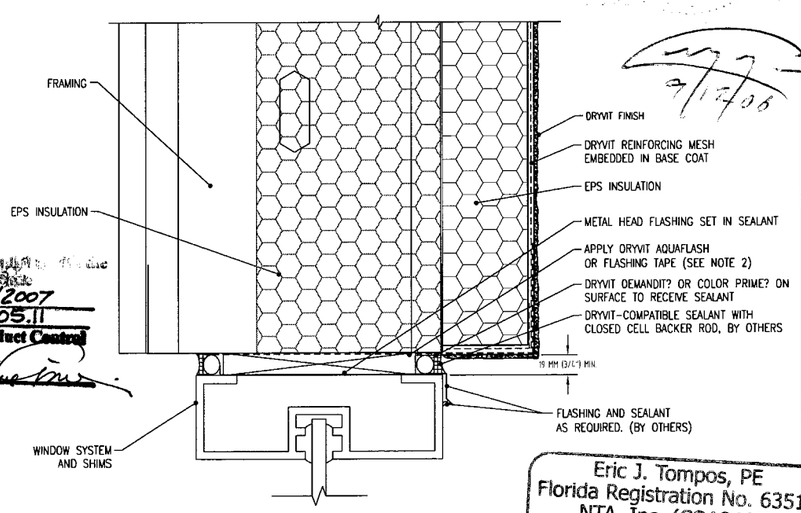

TERMINATION AT HEAD

Date 03/15/2007
NOA# 06-0405.11
Miami Dade Product Control Division
By

The architecture, engineering and design of the project using the Stoam and Dryvit products is the responsibility of the project's design professional. All systems must comply with local building codes and standards. This detail is for general information and guidance only and Stoam specifically disclaims any liability for the use of this detail and for the architecture, design, engineering or workmanship of any project. The project design professional determines, in its sole discretion, whether this detail or a functionally equivalent alternative is best suited for the project.

Eric J. Tompos, PE
Florida Registration No. 63511
NTA, Inc. (COA8463)
P.O. Box 490
Nappanee, IN 46550

RELEASE/REVISION			
REV	DATE	NAME	DESCRIPTION
3	08-10-06	WRB	ADDED DETAILS
1	04-21-06	WRB	NAME CHANGE
2	07-14-06	WRB	REVISED PER FBC OFFICE

STOAM INSULATED STEEL WALL PANEL EIFS DETAILS

STOAM
The Ultimate in Steel Frame Construction

TOLERANCES UNLESS NOTED OTHERWISE
FRACTION --- ±1/16"
.XX ------- ±.03
.XXX ------ ±.005
.XXXX ----- ±.0010
ANGULAR --- ± 1°

DATE	DRAWN BY	CHECKED BY
03-13-06	WRB	WRB

PROJECT: STOAM SPEC'S
MATERIAL: SEE ABOVE
PART/DWG NO.: W-001-3
DRAWING: EIFS EXTERIOR COATING
SHEET: 3 OF 6

NOTE:

1. OPENING SHALL BE FLASHED WITH DRYVIT AQUAFLASH OR FLASHING TAPE
2. FLASHING SHALL EXTEND TO INTERIOR FACE OF FRAMING
3. REFER TO OS 0.0.05, 0.0.06 FOR INTEGRATION OF FLASHING
4. APPLY DRYVIT FLASHING TAPE SURFACE CONDITIONER™ AND DRYVIT FLASHING TAPE™ AT SILL, INCLUDING CORNER SPLICES.

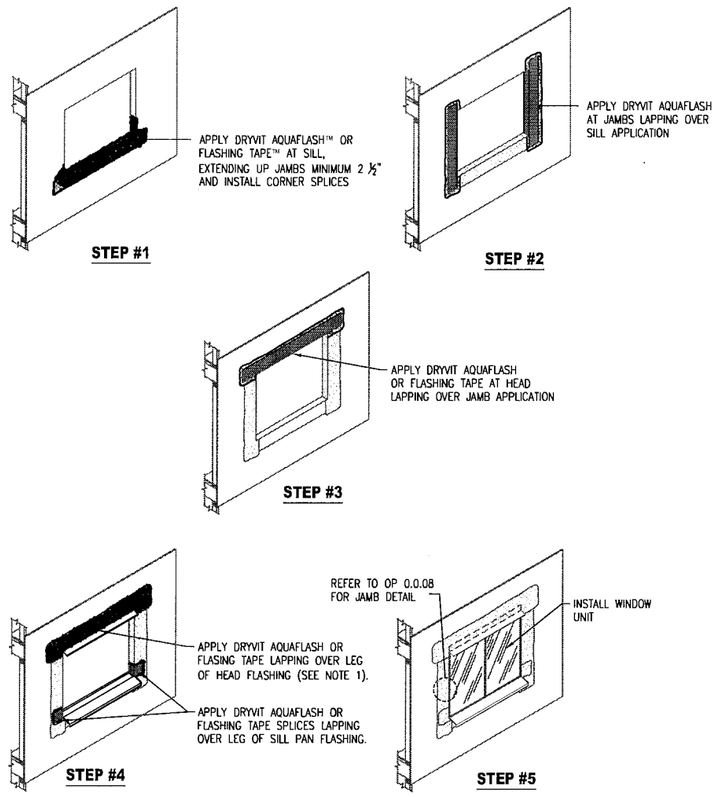

ROUGH OPENING PREPARATION

The architecture, engineering and design of the project using the Stoam and Dryvit products is the responsibility of the project's design professional. All systems must comply with local building codes and standards. This detail is for general information and guidance only and Stoam specifically disclaims any liability for the use of this detail and for the architecture, design, engineering or workmanship of any project. The project design professional determines, in its sole discretion, whether this detail or a functionally equivalent alternative is best suited for the project.

Eric J. Tompos, PE
Florida Registration No. 63511
NTA, Inc. (COA8463)
P.O. Box 490
Nappanee, IN 46550

NOTE:

1. DRYVIT RECOMMENDS THAT GROUND FLOOR APPLICATIONS AND ALL FACADES EXPOSED TO ABNORMAL STRESS, HIGH TRAFFIC, OR DELIBERATE IMPACT HAVE THE BASE COAT REINFORCED WITH PANZER® MESH PRIOR TO STANDARD™ OR STANDARD PLUS™ MESH. LOCATION OF HIGH IMPACT ZONES SHOULD BE INDICATED ON CONTRACT DRAWINGS.
2. AS A OPTION, THE REINFORCED BASE COAT EDGE WRAP MAY BE EXTENDED ONTO THE STUD TRACK

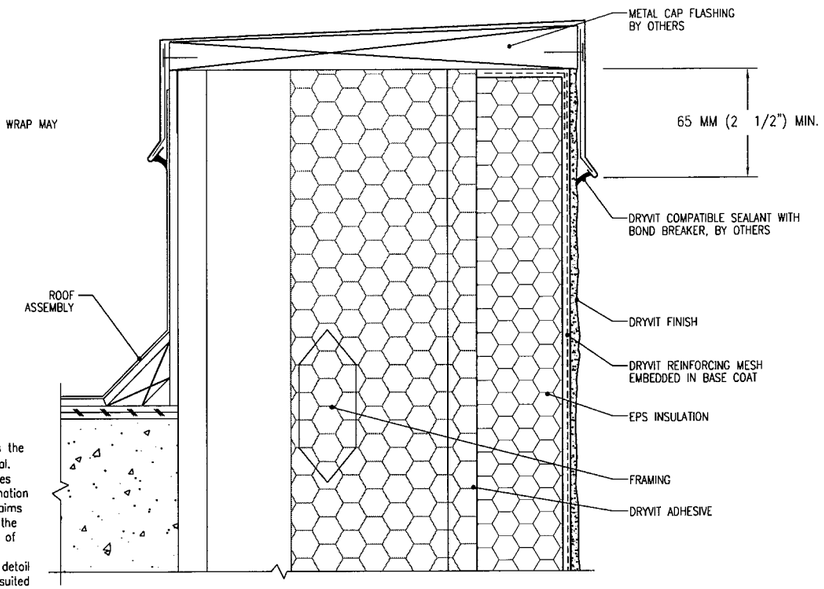

The architecture, engineering and design of the project using the Stoam and Dryvit products is the responsibility of the project's design professional. All systems must comply with local building codes and standards. This detail is for general information and guidance only and Stoam specifically disclaims any liability for the use of this detail and for the architecture, design, engineering or workmanship of any project. The project design professional determines, in its sole discretion, whether this detail or a functionally equivalent alternative is best suited for the project.

TERMINATION AT PARAPET-CAP FLASHING

NOTE:

1. DRYVIT RECOMMENDS THAT GROUND FLOOR APPLICATIONS AND ALL FACADES EXPOSED TO ABNORMAL STRESS, HIGH TRAFFIC, OR DELIBERATE IMPACT HAVE THE BASE COAT REINFORCED WITH PANZER® MESH PRIOR TO STANDARD™ OR STANDARD PLUS™ MESH. LOCATION OF HIGH IMPACT ZONES SHOULD BE INDICATED ON CONTRACT DRAWINGS.
2. EXPANSION JOINT IN THE OUTSULATION SYSTEM IS NECESSARY WHERE SIGNIFICANT DIFFERENTIAL MOVEMENT IS EXPECTED AT FLOOR LINES.
3. LOCATE EXTERNAL SEALANT JOINT WITHIN 50 MM (2") OF BREAK IN SHEATHING.

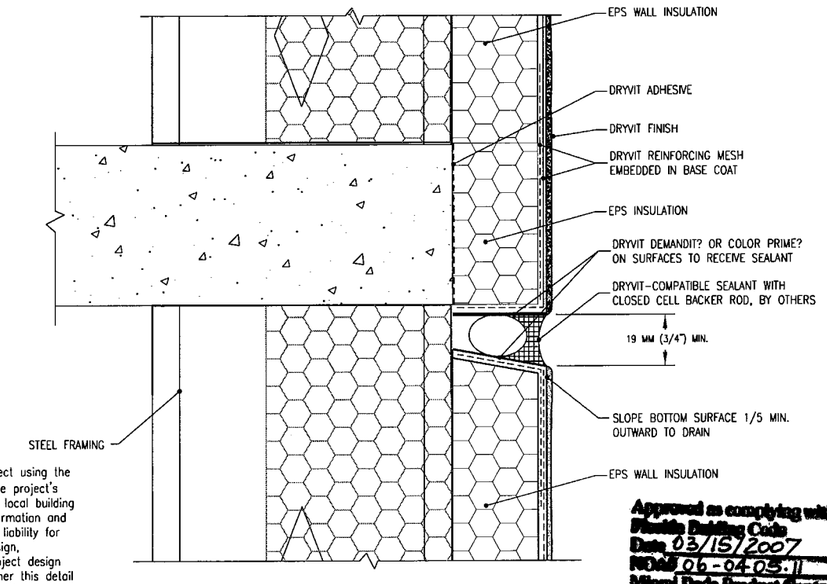

The architecture, engineering and design of the project using the Stoam and Dryvit products is the responsibility of the project's design professional. All systems must comply with local building codes and standards. This detail is for general information and guidance only and Stoam specifically disclaims any liability for the use of this detail and for the architecture, design, engineering or workmanship of any project. The project design professional determines, in its sole discretion, whether this detail or a functionally equivalent alternative is best suited for the project.

LIGHT GAUGE FRAMING - EXPANSION JOINT AT FLOOR LINE

Approved as complying with the Florida Building Code
Date 03/15/2007
NOA# 06-04.05.11
Miami Dade Product Control Division
By

RELEASE/REVISION

REV	DATE	NAME	DESCRIPTION
3	08-10-06	WRB	ADDED DETAILS
1	04-21-06	WRB	NAME CHANGE
2	07-14-06	WRB	REVISED PER FBC OFFICE

STOAM INSULATED STEEL WALL PANEL EIIFS DETAILS

STOAM
The Ultimate in Steel Frame Construction

TOLERANCES UNLESS NOTED OTHERWISE
FRACTION --- ±1/16"
.XX ------- ±.03
.XXX ------ ±.005
.XXXX ----- ±.0010
ANGULAR --- ± 1°

DATE	DRAWN BY	CHECKED BY
03-13-06	WRB	WRB

PROJECT: STOAM SPEC'S
MATERIAL: SEE ABOVE
PART/DWG NO.: W-001-3
DRAWING: EIFS EXTERIOR COATING
SHEET: 4 OF 6

NOTE:

1. APPLY AQUAFLASH OR FLASHING TAPE AT WALL/SLEEVE TRANSITION.
2. FLASHINGS SHALL BE CONFIGURED AND INSTALLED IN A WATER TIGHT FASHION PRIOR TO OUTSULATION INSTALLATION

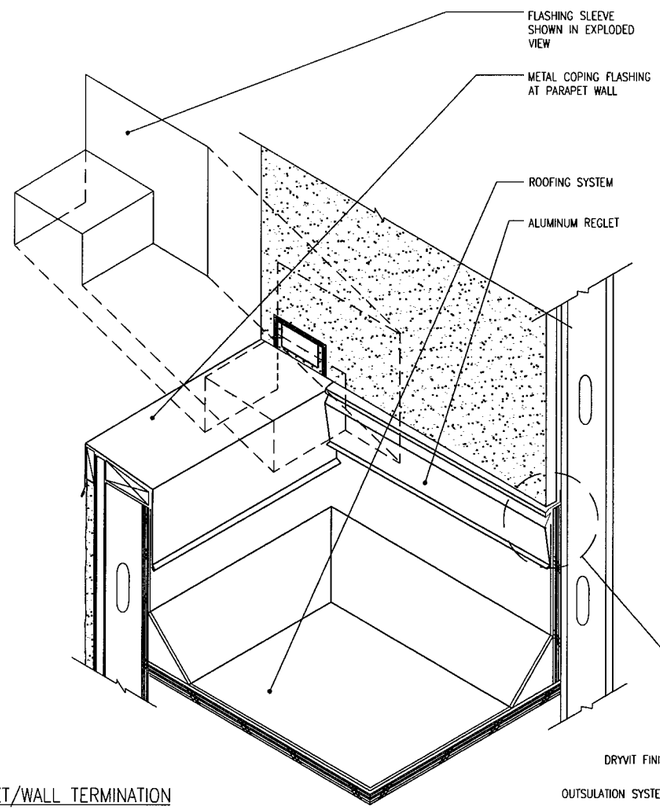

PARAPET/WALL TERMINATION

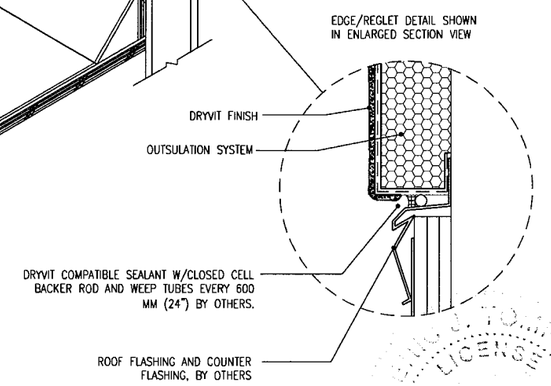

The architecture, engineering and design of the project using the Stoam and Dryvit products is the responsibility of the project's design professional. All systems must comply with local building codes and standards. This detail is for general information and guidance only and Stoam specifically disclaims any liability for the use of this detail and for the architecture, design, engineering or workmanship of any project. The project design professional determines, in its sole discretion, whether this detail or a functionally equivalent alternative is best suited for the project.

Eric J. Tompos, PE
Florida Registration No. 63511
NTA, Inc. (COA8463)
P.O. Box 490
Nappanee, IN 46550

NOTE:

1. DRYVIT RECOMMENDS THAT GROUND FLOOR APPLICATIONS AND ALL FACADES EXPOSED TO ABNORMAL STRESS, HIGH TRAFFIC, OR DELIBERATE IMPACT HAVE THE BASE COAT REINFORCED WITH PANZER® MESH PRIOR TO STANDARD™ OR STANDARD PLUS™ MESH. LOCATION OF HIGH IMPACT ZONES SHOULD BE INDICATED ON CONTRACT DRAWINGS.

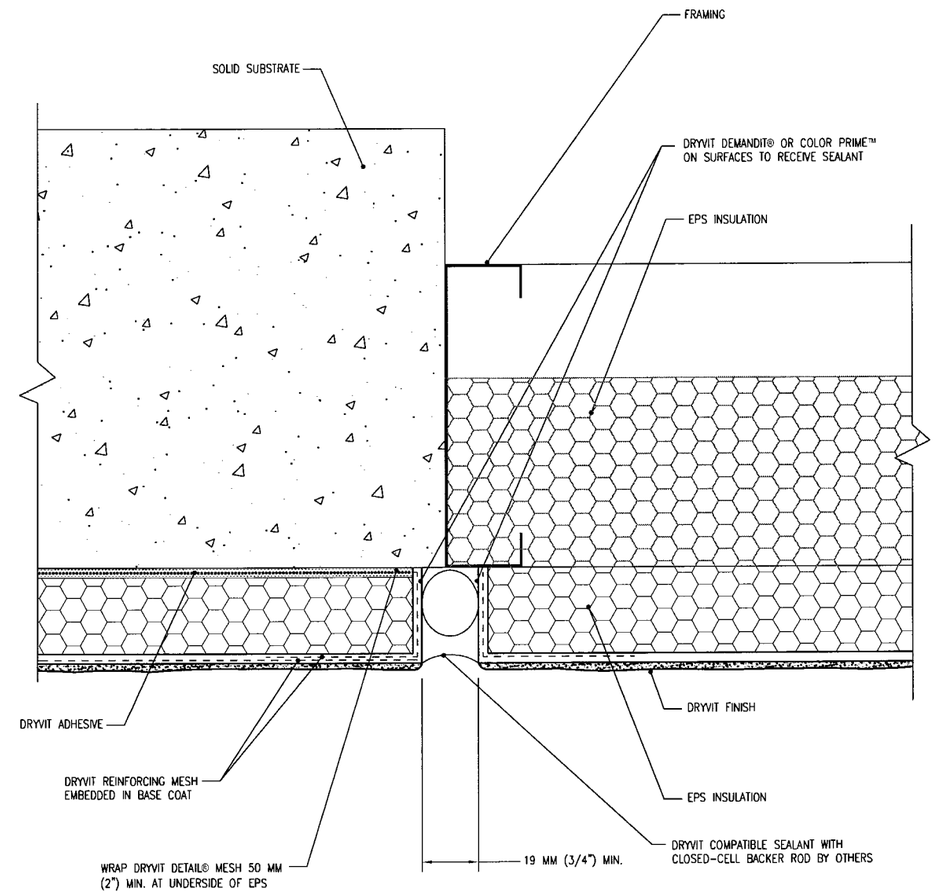

OUTSULATION EXPANSION JOINT – DISSIMILAR SUBSTRATES

The architecture, engineering and design of the project using the Stoam and Dryvit products is the responsibility of the project's design professional. All systems must comply with local building codes and standards. This detail is for general information and guidance only and Stoam specifically disclaims any liability for the use of this detail and for the architecture, design, engineering or workmanship of any project. The project design professional determines, in its sole discretion, whether this detail or a functionally equivalent alternative is best suited for the project.

Approved as complying with the Florida Building Code
Date 03/15/2007
NOA# 06-0405.11
Miami Dade Product Control Division
By

RELEASE/REVISION

REV	DATE	NAME	DESCRIPTION
3	08-10-06	WRB	ADDED DETAILS
1	04-21-06	WRB	NAME CHANGE
2	07-14-06	WRB	REVISED PER FBC OFFICE

STOAM INSULATED STEEL WALL PANEL EIFS DETAILS

STOAM
The Ultimate in Steel Frame Construction

TOLERANCES UNLESS NOTED OTHERWISE
FRACTION --- ±1/16"
.XX ------- ±.03
.XXX ------ ±.005
.XXXX ----- ±.0010
ANGULAR --- ± 1°

DATE	DRAWN BY	CHECKED BY
03-13-06	WRB	WRB

PROJECT: STOAM SPEC'S
MATERIAL: SEE ABOVE
PART/DWG NO.: W-001-3
DRAWING: EIFS EXTERIOR COATING
SHEET: 5 OF 6

NOTE:
1. DRYVIT RECOMMENDS THAT GROUND FLOOR APPLICATIONS AND ALL FACADES EXPOSED TO ABNORMAL STRESS, HIGH TRAFFIC, OR DELIBERATE IMPACT HAVE THE BASE COAT REINFORCED WITH PANZER® MESH PRIOR TO STANDARD™ OR STANDARD PLUS™ MESH. LOCATION OF HIGH IMPACT ZONES SHOULD BE INDICATED ON CONTRACT DRAWINGS.
2. DOUBLE WRAP OUTSIDE CORNERS WITH REINFORCING MESH OR USE CORNER MESH.
3. DO NOT LAP REINFORCING MESH WITHIN 200 MM (8") OF A CORNER.

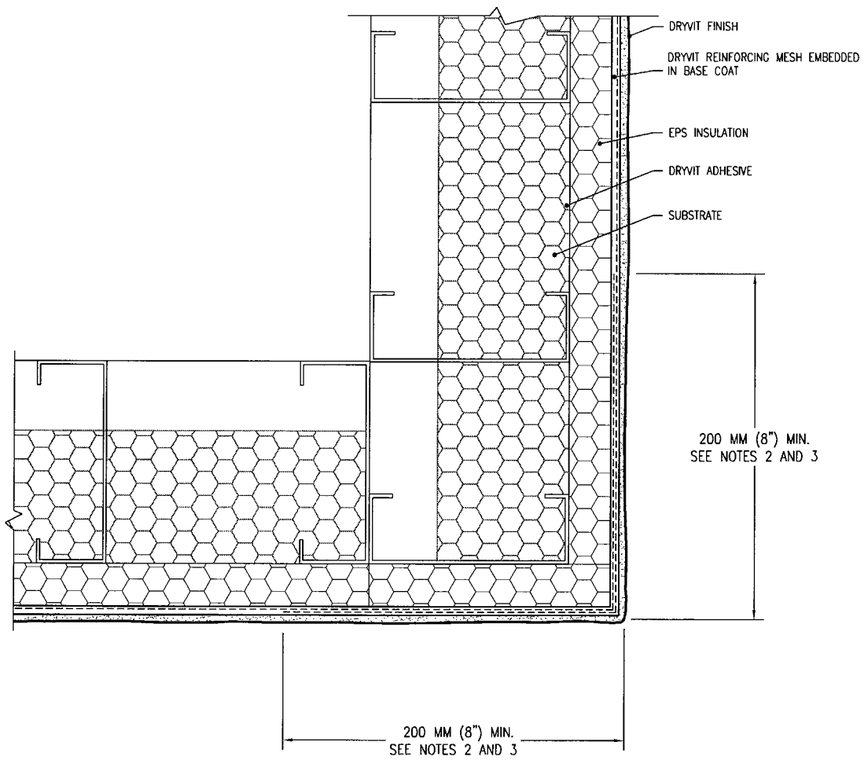

OUTSIDE CORNERS

The architecture, engineering and design of the project using the Stoam and Dryvit products is the responsibility of the project's design professional. All systems must comply with local building codes and standards. This detail is for general information and guidance only and Stoam specifically disclaims any liability for the use of this detail and for the architecture, design, engineering or workmanship of any project. The project design professional determines, in its sole discretion, whether this detail or a functionally equivalent alternative is best suited for the project.

Eric J. Tompos, PE
Florida Registration No. 63511
NTA, Inc. (COA8463)
P.O. Box 490
Nappanee, IN 46550

ERIC J. TOMPOS LICENSE No. 63511 STATE OF

9/12/06

NOTE:
1. DRYVIT RECOMMENDS THAT GROUND FLOOR APPLICATIONS AND ALL FACADES EXPOSED TO ABNORMAL STRESS, HIGH TRAFFIC, OR DELIBERATE IMPACT HAVE THE BASE COAT REINFORCED WITH PANZER® MESH PRIOR TO STANDARD™ OR STANDARD PLUS™ MESH. LOCATION OF HIGH IMPACT ZONES SHOULD BE INDICATED ON CONTRACT DRAWINGS.

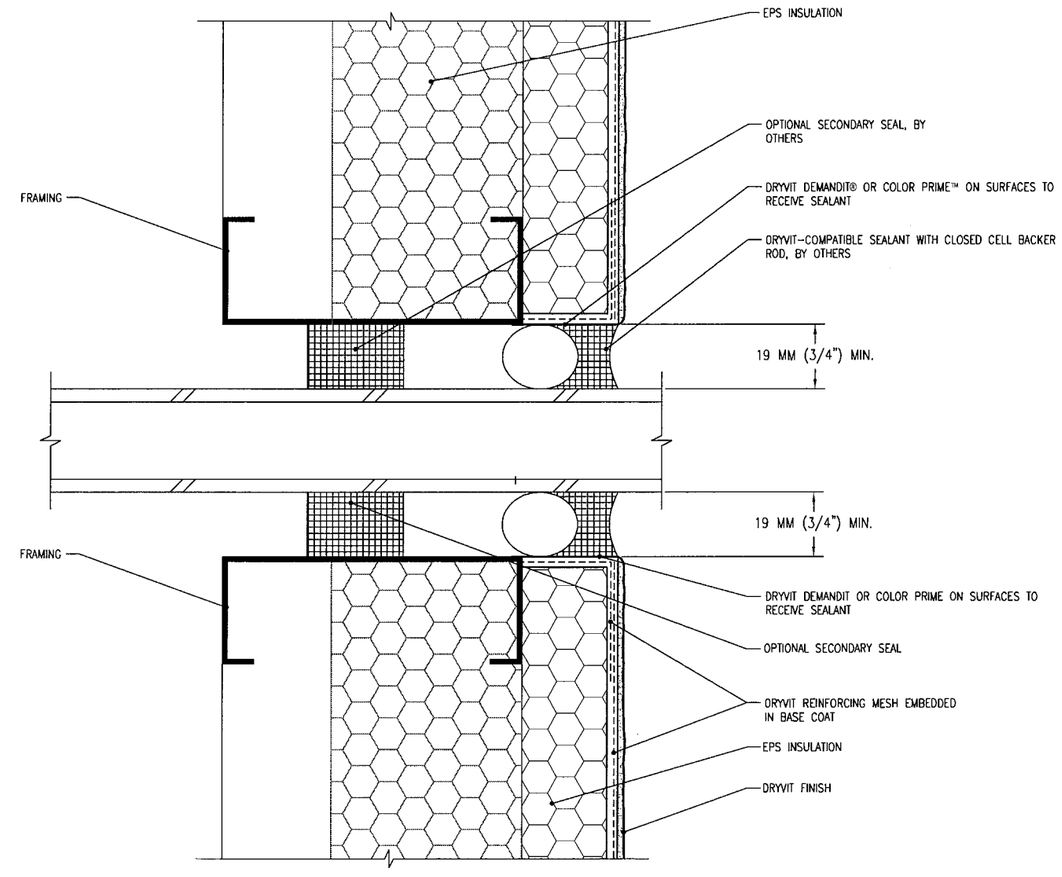

PENETRATIONS

The architecture, engineering and design of the project using the Stoam and Dryvit products is the responsibility of the project's design professional. All systems must comply with local building codes and standards. This detail is for general information and guidance only and Stoam specifically disclaims any liability for the use of this detail and for the architecture, design, engineering or workmanship of any project. The project design professional determines, in its sole discretion, whether this detail or a functionally equivalent alternative is best suited for the project.

Approved as complying with the Florida Building Code
Date 03/15/2007
NOA# 06-0405.11
Miami Dade Product Control Division
By

RELEASE/REVISION			
REV	DATE	NAME	DESCRIPTION
3	08-10-06	WRB	ADDED DETAILS
1	04-21-06	WRB	NAME CHANGE
2	07-14-06	WRB	REVISED PER FBC OFFICE

STOAM INSULATED STEEL WALL PANEL EXTERIOR VIEW

STOAM
The Ultimate in Steel Frame Construction

TOLERANCES UNLESS NOTED OTHERWISE
FRACTION --- ±1/16"
.XX ------- ±.03
.XXX ------ ±.005
.XXXX ----- ±.0010
ANGULAR --- ± 1°

DATE	DRAWN BY	CHECKED BY
03-13-06	WRB	WRB

PROJECT: STOAM SPEC'S
MATERIAL: SEE ABOVE
PART/DWG NO.: W-001-3
DRAWING: EIFS EXTERIOR COATING
SHEET: 6 OF 6