MIAMI-DADE COUNTY

BUILDING CODE COMPLIANCE OFFICE (BCCO)
PRODUCT CONTROL DIVISION

MIAMI-DADE COUNTY, FLORIDA
METRO-DADE FLAGLER BUILDING
140 WEST FLAGLER STREET, SUITE 1603
MIAMI, FLORIDA 33130-1563
(305) 375-2901 FAX (305) 375-2908

NOTICE OF ACCEPTANCE (NOA)

Lawson Industries, Inc.
8501 N.W. 90th Street
Medley, Fl 33166

SCOPE:
This NOA is being issued under the applicable rules and regulations governing the use of construction materials. The documentation submitted has been reviewed by Miami-Dade County Product Control Division and accepted by the Board of Rules and Appeals (BORA) to be used in Miami Dade County and other areas where allowed by the Authority Having Jurisdiction (AHJ).

This NOA shall not be valid after the expiration date stated below. The Miami-Dade County Product Control Division (In Miami Dade County) and/or the AHJ (in areas other than Miami Dade County) reserve the right to have this product or material tested for quality assurance purposes. If this product or material fails to perform in the accepted manner, the manufacturer will incur the expense of such testing and the AHJ may immediately revoke, modify, or suspend the use of such product or material within their jurisdiction. BORA reserves the right to revoke this acceptance, if it is determined by Miami-Dade County Product Control Division that this product or material fails to meet the requirements of the applicable building code.
This product is approved as described herein, and has been designed to comply with the Florida Building Code, including the High Velocity Hurricane Zone.

DESCRIPTION: Series "SGD-9200" Aluminum Sliding Glass Door-LMI

APPROVAL DOCUMENT: Drawing No. **W02-100,** titled "SGD-9200 Alum. Sliding Glass Door (LMI)", sheets 1 through 5 of 5, prepared by Al Farooq Corporation, dated 10/21/02, with last revision on 07/12/06, signed and sealed by Humayoun Farooq, P.E., bearing the Miami-Dade County Product Control Revision stamp with the Notice of Acceptance number and expiration date by the Miami-Dade County Product Control Division.

MISSILE IMPACT RATING: Large and Small Missile Impact

LABELING: Each unit shall bear a permanent label with the manufacturer's name or logo, city, state and following statement: "Miami-Dade County Product Control Approved", unless otherwise noted herein.

RENEWAL of this NOA shall be considered after a renewal application has been filed and there has been no change in the applicable building code negatively affecting the performance of this product.

TERMINATION of this NOA will occur after the expiration date or if there has been a revision or change in the materials, use, and/or manufacture of the product or process. Misuse of this NOA as an endorsement of any product, for sales, advertising or any other purposes shall automatically terminate this NOA. Failure to comply with any section of this NOA shall be cause for termination and removal of NOA.

ADVERTISEMENT: The NOA number preceded by the words Miami-Dade County, Florida, and followed by the expiration date may be displayed in advertising literature. If any portion of the NOA is displayed, then it shall be done in its entirety.

INSPECTION: A copy of this entire NOA shall be provided to the user by the manufacturer or its distributors and shall be available for inspection at the job site at the request of the Building Official.
This NOA revises NOA **No. 02-1126.04** and consists of this page 1 and evidence page E-1, as well as approval document mentioned above.
The submitted documentation was reviewed by **Jaime D. Gascon, P.E.**

PRODUCT CONTROL ACCEPTED

J. Gascon
8/3/06

Lawson Industries, Inc.

NOTICE OF ACCEPTANCE: EVIDENCE SUBMITTED

A. DRAWINGS

1. Manufacturer's die drawings and sections.
2. Drawing No. **W02-100,** titled "SGD-9200 Alum. Sliding Glass Door (LMI)", sheets 1 through 5 of 5, prepared by Al Farooq Corporation, dated 10/21/02, with last revision on 07/12/06, signed and sealed by Humayoun Farooq, P.E.

B. TESTS

1. Test reports on 1) Air Infiltration Test, per FBC, TAS 202-94
   2) Uniform Static Air Pressure Test, Loading per FBC, TAS 202-94
   3) Water Resistance Test, per FBC, TAS 202-94
   4) Large Missile Impact Test per FBC, TAS 201-94
   5) Cyclic Wind Pressure Loading per FBC, TAS 203-94
   6) Forced Entry Test, per FBC 2411 3.2.1 and TAS 202-94

   along with marked-up drawings and installation diagram of an aluminum sliding glass door, prepared by Fenestration Testing Laboratory, Inc., Test Report No. **FTL 3525**, dated 8/23/02, signed and sealed by Joseph Chan, P.E. "Submitted under NOA No. 02-1126.04"

C. CALCULATIONS

1. Revised Anchor Calculations and structural analysis, prepared by prepared by Al Farooq Corporation, dated 07/10/06, signed and sealed by Humayoun Farooq, P.E. "Complies with ASTM E-1300-98"

D. MATERIAL CERTIFICATIONS

1. Notice of Acceptance No. **01-1204.01** issued to E.I. DuPont DeNemours for "Sentry Glass Plus" dated 1/17/02, expiring on 1/14/07.
2. Notice of Acceptance No. 05-1208.02 issued to E.I. DuPont DeNemours for "Dupont Butacite PVB® Interlayer" dated 01/06/06, expiring on 12/11/10.

E. STATEMENTS

1. Statement letters of conformance, dated 03/10/06, signed and sealed by Dr. Humayoun Farooq, P.E.

F. OTHER

1. Letter from the consultant stating that the product is in compliance with the Florida Building Code (Code), date 07/25/06.

Jaime D. Gascon, P.E.
Chief, Product Control Division
NOA No 06-0406.07
Expiration Date: February 13, 2008
Approval Date: August 24, 2006

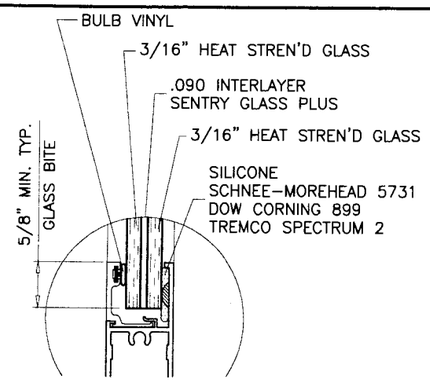

GLASS TYPE 'A'

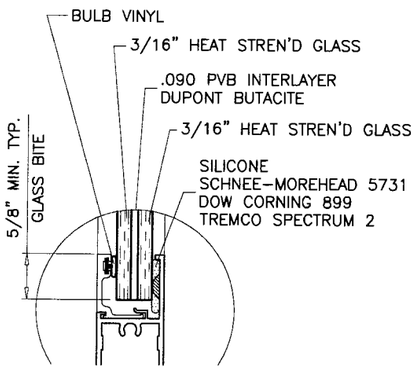

GLASS TYPE 'B'

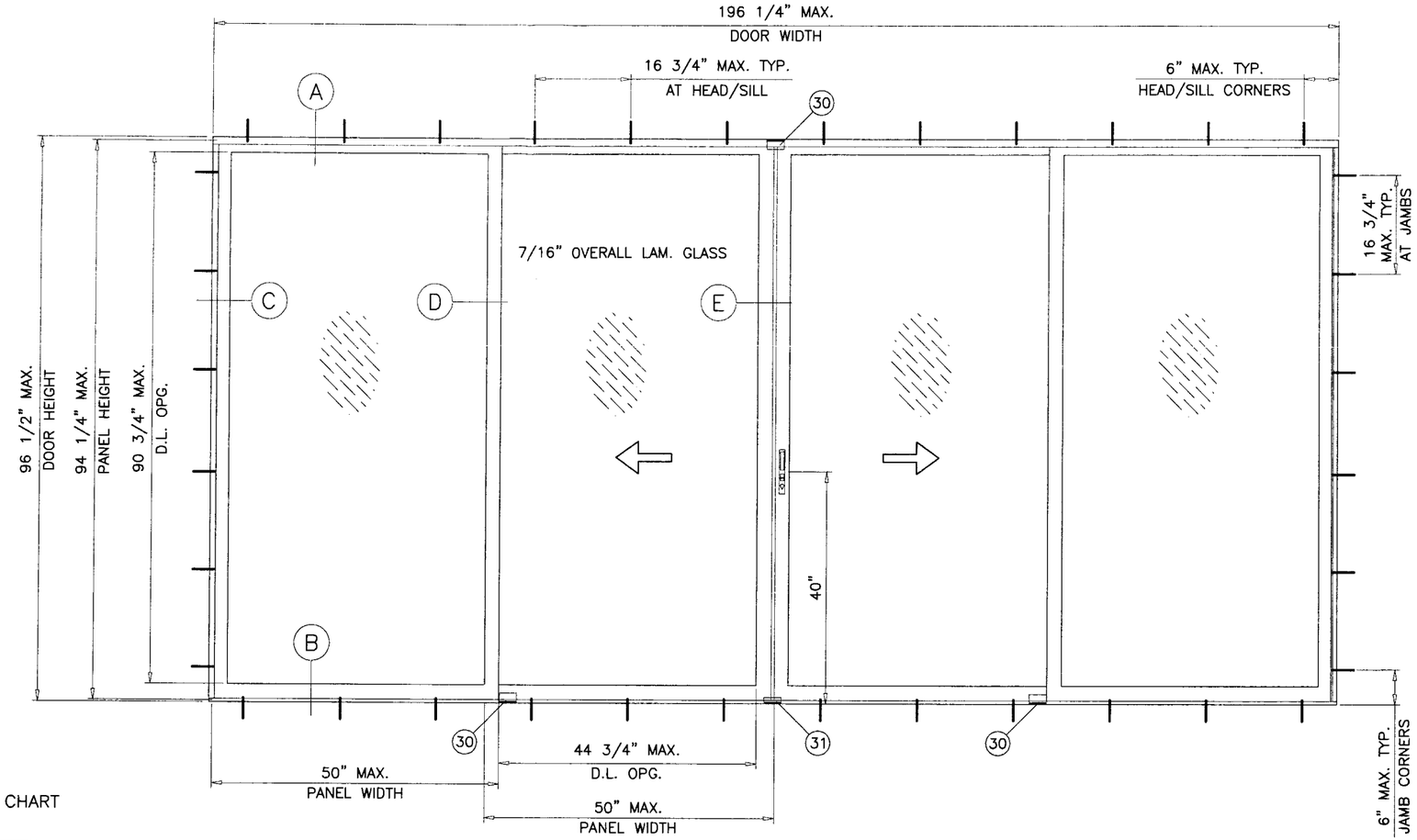

TYPICAL ELEVATION
TESTED UNIT

SGD-9200 ALUMINUM SLIDING GLASS DOOR

DESIGN LOAD RATING FOR THESE DOORS TO BE AS PER CHART SHOWN.

THIS PRODUCT HAS BEEN DESIGNED AND TESTED TO COMPLY WITH THE REQUIREMENTS OF THE FLORIDA BUILDING CODE 2004 EDITION (REV. 2005) INCLUDING HIGH VELOCITY HURRICANE ZONE (HVHZ).

WOOD BUCKS BY OTHERS, MUST BE ANCHORED PROPERLY TO TRANSFER LOADS TO THE STRUCTURE.

ANCHORS SHALL BE AS LISTED, SPACED AS SHOWN ON DETAILS, ANCHORS EMBEDMENT TO BASE MATERIAL SHALL BE BEYOND WALL DRESSING OR STUCCO.

ANCHORING OR LOADING CONDITIONS NOT SHOWN IN THESE DETAILS ARE NOT PART OF THIS APPROVAL.

A LOAD DURATION INCREASE IN ALLOWABLE STRESS IS USED IN DESIGN OF ANCHORS INTO WOOD ONLY.

MATERIALS INCLUDING BUT NOT LIMITED TO STEEL/METAL SCREWS, THAT COME INTO CONTACT WITH OTHER DISSIMILAR MATERIALS SHALL MEET THE REQUIREMENTS OF 2004 FLORIDA BLDG. CODE SECTION 2003.8.4 (SUPPLEMENT 2005).

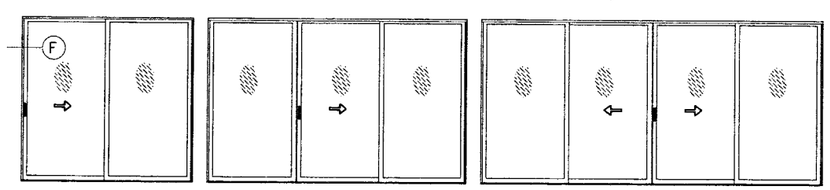

OX OR XO OXO OXXO

APPROVED CONFIGURATIONS

TWO TRACK FRAME DOOR CONFIGURATIONS OF MORE THAN FOUR PANELS USING STILE COMBINATIONS SHOWN IN THESE DETAILS MAY ALSO BE APPROVED (EXAMPLE OOXXOO).

DESIGN LOAD CAPACITY – PSF GLASS TYPES 'A' OR 'B'							
PANEL WIDTH NOMINAL FT./IN.	DOOR HEIGHT FT./IN.	STANDARD SILL		2-1/4" RISER		3" RISER	
		EXT. (+)	INT. (–)	EXT. (+)	INT. (–)	EXT. (+)	INT. (–)
2/6	6/8	40.7	60.0	56.7	60.0	60.0	60.0
3/0		40.7	60.0	56.7	60.0	60.0	60.0
3/6		40.7	60.0	56.7	60.0	60.0	60.0
4/0		40.7	60.0	56.7	60.0	60.0	60.0
4/6		40.7	60.0	56.7	60.0	60.0	60.0
4/11		40.7	60.0	56.7	60.0	60.0	60.0
2/6	8/0	40.7	60.0	56.7	60.0	60.0	60.0
3/0		40.7	60.0	56.7	60.0	60.0	60.0
3/6		40.7	60.0	56.7	60.0	60.0	60.0
4/0		40.7	60.0	56.7	60.0	60.0	60.0

NOTE:
GLASS CAPACITIES ON THIS SHEET ARE BASED ON ASTM E1300-98 (60 SEC. WIND)

DOORS GLAZED WITH LAMINATED GLASS RATED FOR LARGE MISSILE IMPACT AND REQUIRE NO SHUTTERS.

LAMINATED GLASS
LARGE MISSILE IMPACT

Engr: DR. HUMAYOUN FAROOQ
STRUCTURES
FLA. PE # 16557
C.A.N. 3538

JUL 18 2006

PRODUCT REVISED
as complying with the Florida Building Code
Acceptance No. 06-0406.07
Expiration Date FEB. 13, 2008
By
Miami Dade Product Control Division

AL-FAROOQ CORPORATION
ENGINEERS, PLANNERS & PRODUCT DESIGN
1235 SW 87 AVE
MIAMI, FLORIDA 33174
TEL. (305) 264-8100 FAX. (305) 262-6978

COMP-ANL\W02-100LI

SGD-9200 ALUM. SLIDING GLASS DOOR (L.M.I.)

LAWSON INDUSTRIES INC.
8501 N.W. 90 STREET
MEDLEY, FL. 33166
TEL. (305) 696-8660 FAX (305) 696-6006

revisions:

no	date	by	description
A	03.16.06		UPDATED FOR 2004 FBC
B	07.12.06		NO CHANGE THIS SHEET

date: 10-21-02
scale: 1/2"=1'-0"
dr. by: HAMID
chk. by:

drawing no.
W02-100

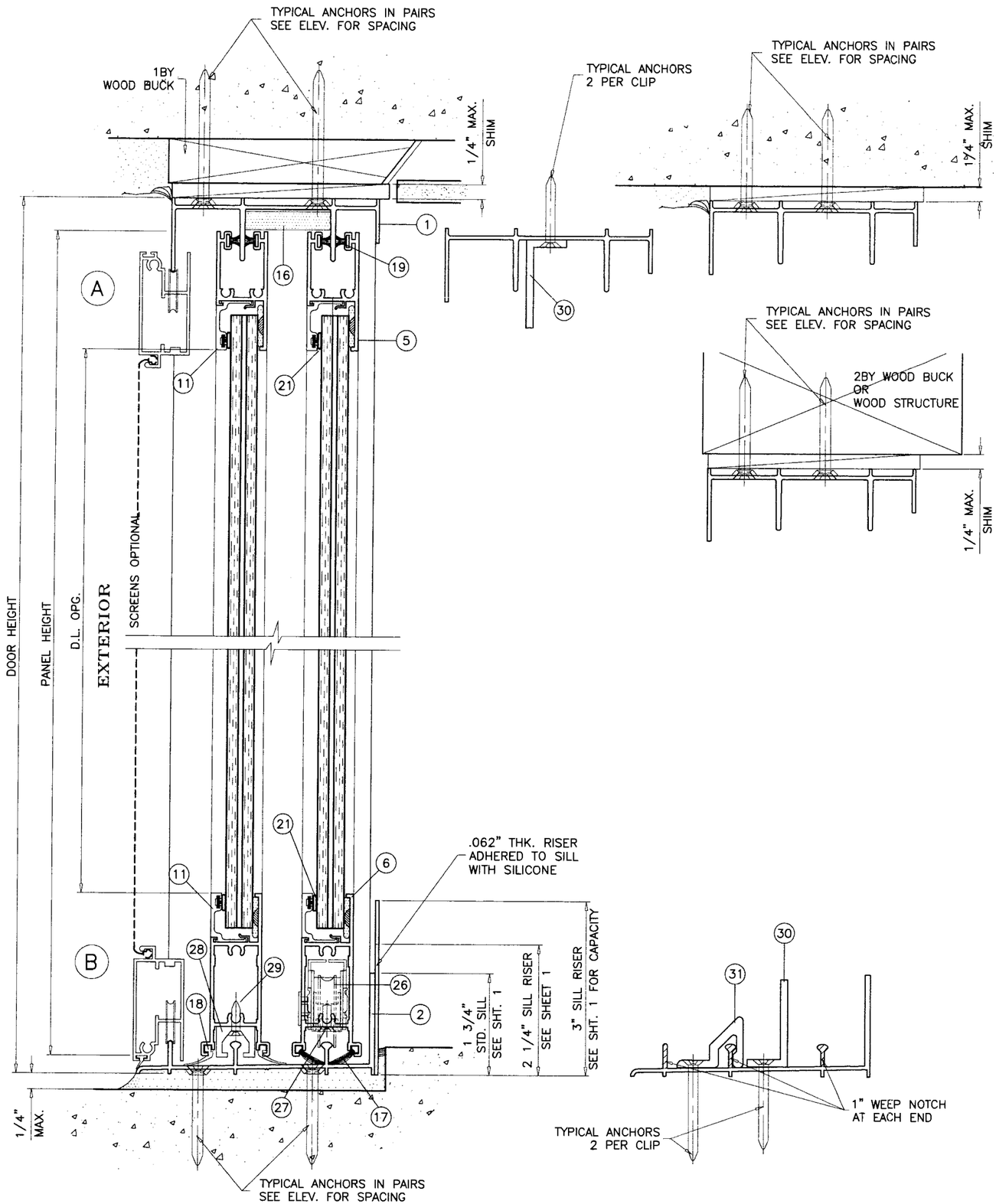

WOOD BUCKS AND METAL STRUCTURES NOT BY LAWSON IND. MUST SUPPORT LOADS IMPOSED BY GLAZING SYSTEM AND TRANSFER THEM TO THE BUILDING STRUCTURE.

TYPICAL ANCHORS: SEE ELEV. FOR SPACING

1/4" DIA TAPCONS

INTO 2BY WOOD BUCKS OR WOOD STRUCTURE
1-3/8" MIN. PENETRATION INTO WOOD

THRU 1BY WOOD BUCKS INTO MASONRY OR CONC.
1-1/4" MIN. EMBED INTO MASONRY OR CONC.

DIRECTLY INTO (3 KSI MIN.) CONCRETE OR MASONRY
1-1/4" MIN. EMBED INTO CONCRETE OR MASONRY

1/4" DRILLFLEX SELF DRILLING SCREWS

INTO METAL STRUCTURES

STEEL : 12 GA. MIN. (Fy = 36 KSI MIN.)
ALUMINUM : 1/8" THK. MIN. (6063-T5 MIN.)
(STEEL IN CONTACT WITH ALUMINUM TO BE PLATED OR PAINTED)

#10 SMS

INTO APPROVED MULLIONS (NO SHIM SPACE)

TYPICAL EDGE DISTANCE

INTO (3 KSI MIN.) CONCRETE AND MASONRY = 2" MIN.
INTO WOOD STRUCTURE = 1" MIN.
INTO METAL STRUCTURE = 3/4" MIN.

SEALANTS:

FRAME AND VENT CORNERS AND INSTALLATION SCREWS AT SILL SEALED WITH WHITE/ALUMINUM COLORED SEALANT.

Engr: DR. HUMAYOUN FAROOQ
STRUCTURES
FLA. PE # 16557
C.A.N. 3538

JUL 18 2006

PRODUCT REVISED
as complying with the Florida Building Code
Acceptance No. 06-0406.07
Expiration Date FEB. 13, 2008
By
Miami Dade Product Control Division

AL-FAROOQ CORPORATION
ENGINEERS, PLANNERS & PRODUCT DESIGN
1235 SW 87 AVE
MIAMI, FLORIDA 33174
TEL. (305) 264-8100 FAX. (305) 262-6978
COMP-ANL\W02-100LI

SGD-9200 ALUM. SLIDING GLASS DOOR (L.M.I.)

LAWSON INDUSTRIES INC.
8501 N.W. 90 STREET
MEDLEY, FL. 33166
TEL. (305) 696-8660 FAX (305) 696-6006

revisions:

no	date	by	description
A	03.16.06		UPDATED FOR 2004 FBC
B	07.12.06		REV. PER BCCO COMMENTS

date: 10-21-02
scale: 1/2" = 1"
dr. by: HAMID
chk. by:

drawing no.
W02-100

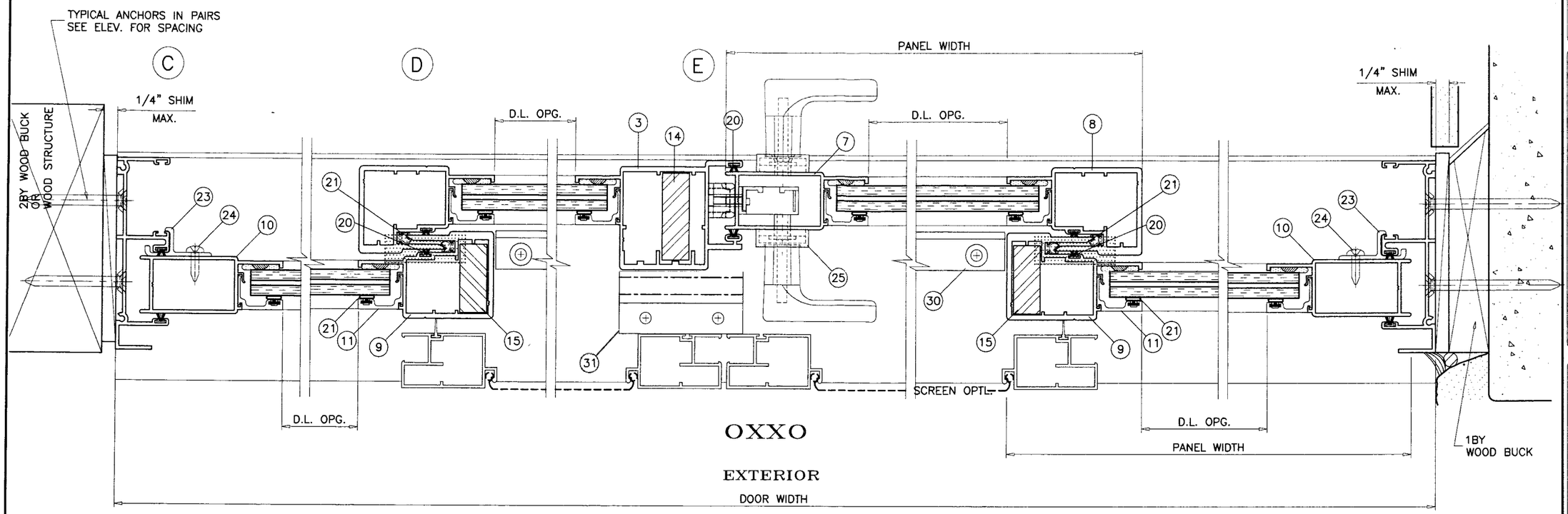

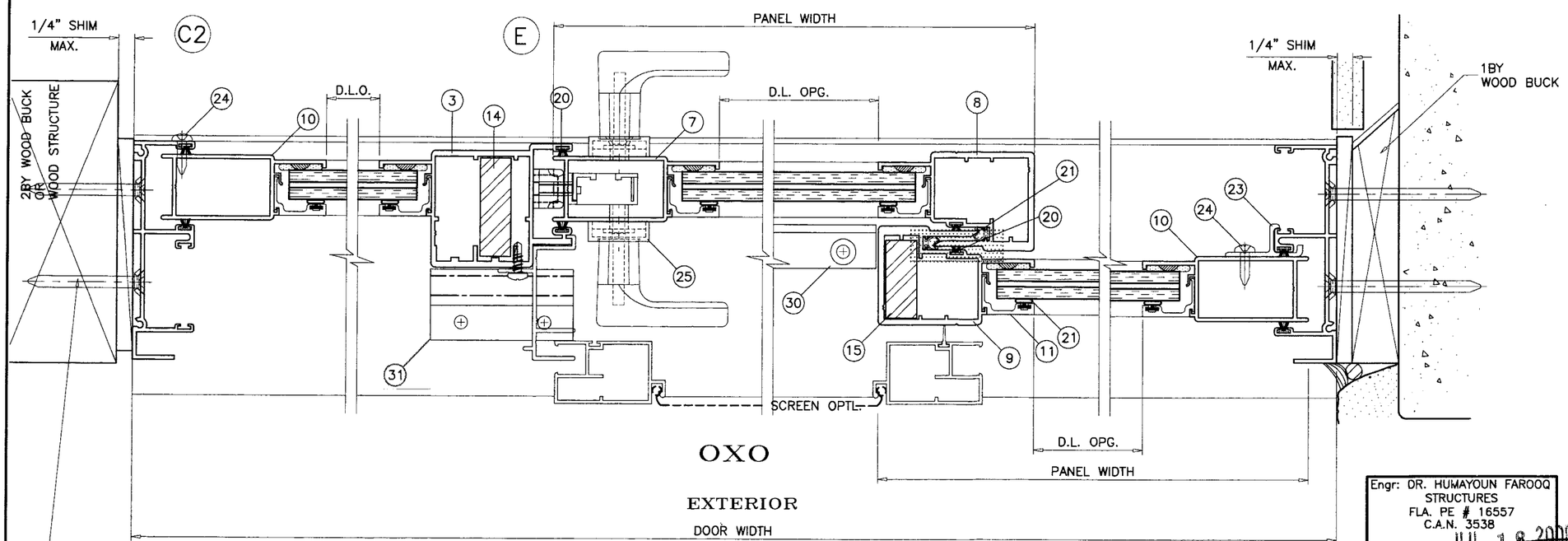

Engr: DR. HUMAYOUN FAROOQ
STRUCTURES
FLA. PE # 16557
C.A.N. 3538

JUL 18 2006

PRODUCT REVISED
as complying with the Florida Building Code
Acceptance No. 06-0406.07
Expiration Date FEB. 13, 2008
By
Miami Dade Product Control Division

AL-FAROOQ CORPORATION
ENGINEERS, PLANNERS & PRODUCT DESIGN
1235 SW 87 AVE
MIAMI, FLORIDA 33174
TEL. (305) 264-8100 FAX. (305) 262-6978
COMP-ANL\W02-100LI

SGD-9200 ALUM. SLIDING GLASS DOOR (L.M.I.)

LAWSON INDUSTRIES INC.
8501 N.W. 90 STREET
MEDLEY, FL. 33166
TEL. (305) 696-8660 FAX (305) 696-6006

revisions:

no	date	by	description
A	03.16.06		UPDATED FOR 2004 FBC
B	07.12.06		NO CHANGE THIS SHEET

date: 10-21-02
scale: 1/2" = 1"
dr. by: HAMID
chk. by:

drawing no.
W02-100

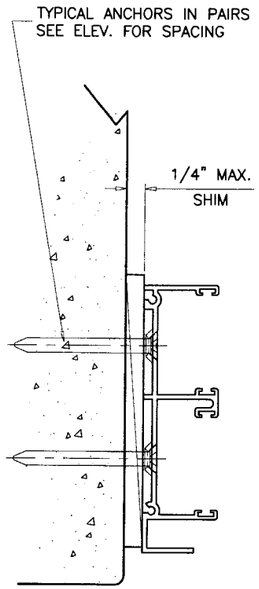

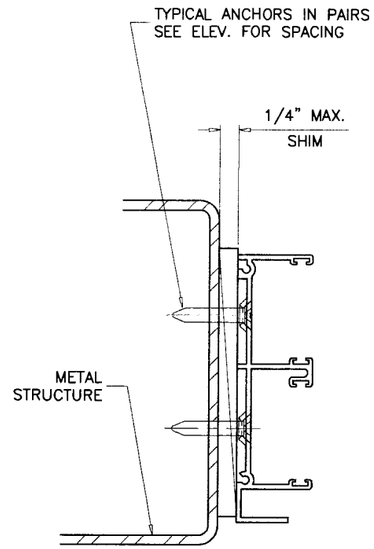

ITEM #	PART #	QUANTITY	DESCRIPTION	MATERIAL	MANF./SUPPLIER/REMARKS
1	L-9211	1	FRAME HEAD	6063-T6	ALUMAX/WELLS
2	L-9002	1	FRAME SILL - 1 3/4" HI	6063-T6	ALUMAX/WELLS
3	L-9207	1	ASTRAGAL STILE	6063-T6	-
4	L-9212	2	FLANGE FRAME JAMB	6063-T5	-
5	L-9204	1	PANEL TOP RAIL	6063-T5	-
6	L-9205	1	PANEL BOTTOM RAIL	6063-T5	-
7	L-9201	1	PANEL LOCK STILE	6063-T6	-
8	L-9202	1	PANEL INTERIOR INTERLOCK	6063-T6	-
9	L-9203	1	PANEL EXTERIOR INTERLOCK	6063-T6	-
10	L-9201	1	PANEL FIXED STILE	6063-T6	-
11	L-9209	AS REQ'D.	ALUMINUM GLAZING BEAD	6063-T5	-
12	FS-005	AS REQ'D.	FRAME ASSEMBLY SCREWS	-	#8 X 1/2" P.H. PHILLIPS
13	FS-013	AS REQ'D.	PANEL ASSEMBLY SCREWS	-	#10 X 1" P.H. PHILLIPS
14	AR-021	1	COLD ROLLED STEEL BAR	-	1/2" X 1 1/2"
15	AR-020	AS REQD.	COLD ROLLED STEEL BAR	-	1/2" X 1 1/4"
16	L-9016	1	SELF ADHESIVE PILE PAD	-	13/16" X 1 1/2"
17	PWS-016	AS REQ'D.	MVG. BOTTOM RAIL WTS'P	-	ULTRAFAB #QB6757DK
18	VWS-016	AS REQ'D.	FXD. BOTTOM RAIL WTS'P	-	VINYL FLAP #WV-2087
19	PWS-009	AS REQ'D.	PANEL TOP RAIL WTS'P	-	.187"x.310" (7830-6001-1)
20	PWS-003	AS REQ'D.	FIN SEAL WEATHERSTRIP	-	.187"x.210" (7820-6001-9)
21	VWS-004	AS REQ'D.	BULB WTS'P.	VINYL	1/4" O.D.
22	HC-043	2X PANEL	PANEL TOP GUIDE	NYLON	-
23	L-9018	7/ FIX. PANEL	FIXED PANEL JAMB CLIP	6063-T5	-
24	FS-011	1 X CLIP	FIXED PANEL CLIP SCREW	-	#10 X 5/8" P.H./PHIL.
25	HC-047	1	MORTISE LOCK HARDWARE	-	W/ HANDLES & KEEPER
26	HC-046	2	MVG. PANEL TANDEM ROLLER	-	2 X EA. MVG. BOT. RAIL
27	FS-003	2	ROLLER ATTACHMENT SCREW	-	#8 X 1/2" F.H./PHIL.
28	AR-008	2	FXD. PANEL "C" TRACK CLIP	-	6" LONG, EA. FXD. BOT. RAIL
29	FS-042	AS REQD.	"C" TRACK ATTACHMENT SCREW	-	#10 X 1" F.H./PHIL.
30	AR-009	3	ANGLE CLIP	ALUMINUM	.704" X 1.50" X 125" X 3"
31	L-9022	1	ASTRAGAL RETAINER CLIP	6063-T5	-

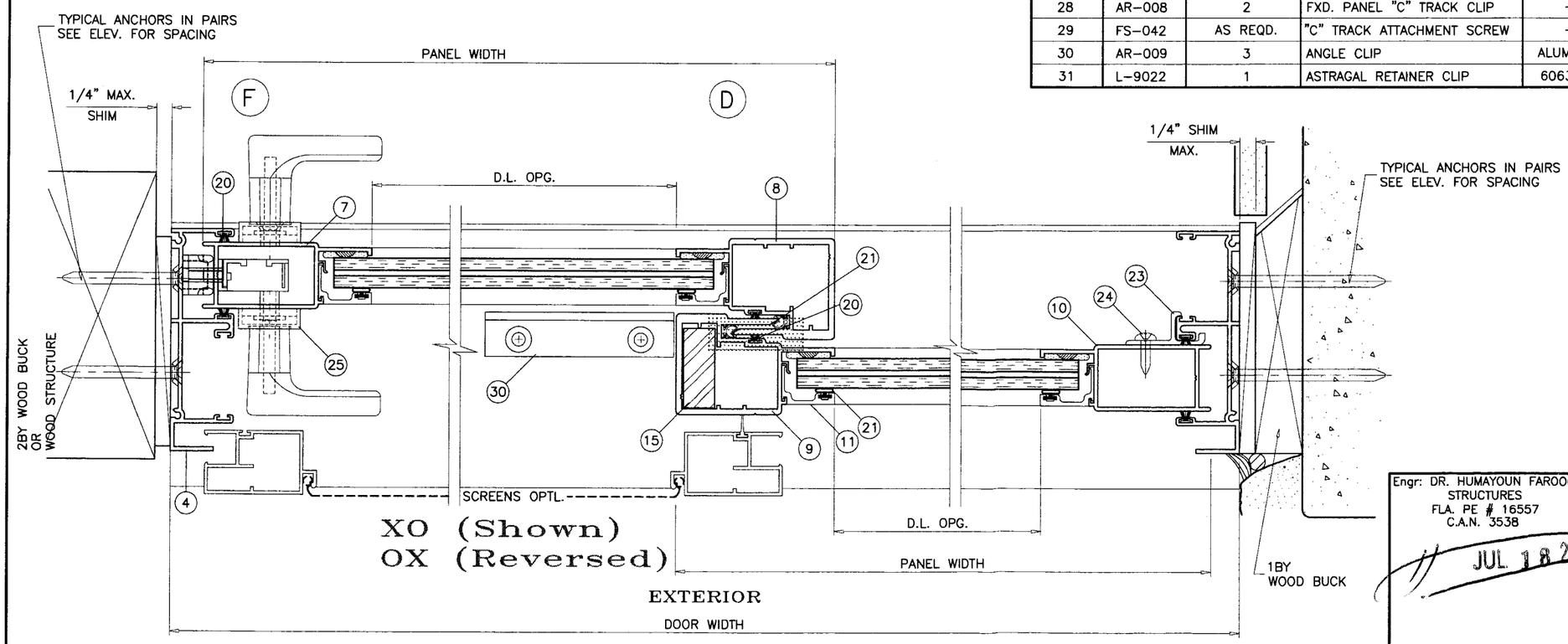

XO (Shown)
OX (Reversed)

EXTERIOR

Engr: DR. HUMAYOUN FAROOQ
STRUCTURES
FLA. PE # 16557
C.A.N. 3538

JUL 18 2006

PRODUCT REVISED
as complying with the Florida
Building Code
Acceptance No. 06-0406.07
Expiration Date FEB. 13, 2008
By
Miami Dade Product Control
Division

AL-FAROOQ CORPORATION
ENGINEERS, PLANNERS & PRODUCT DESIGN
1235 SW 87 AVE
MIAMI, FLORIDA 33174
TEL. (305) 264-8100 FAX. (305) 262-6978
COMP-ANL\W02-100LI

SGD-9200 ALUM. SLIDING GLASS DOOR (L.M.I.)

LAWSON INDUSTRIES INC.
8501 N.W. 90 STREET
MEDLEY, FL. 33166
TEL. (305) 696-8660 FAX (305) 696-6006

revisions:

no	date	by	description
A	03.16.06		UPDATED FOR 2004 FBC
B	07.12.06		NO CHANGE THIS SHEET

date: 10-21-02
scale: 1/2" = 1"
dr. by: HAMID
chk. by:

drawing no.
W02-100

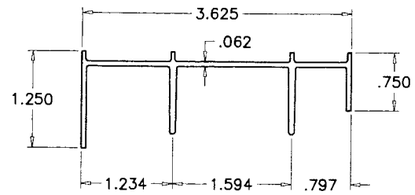

FRAME HEAD

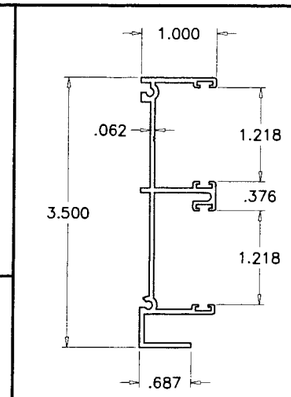

FRAME JAMB

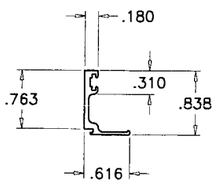

GLASS STOP

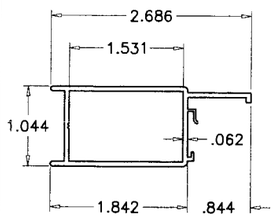

LOCK STILE

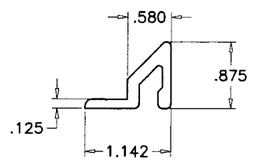

ASTRAGAL RETAINER

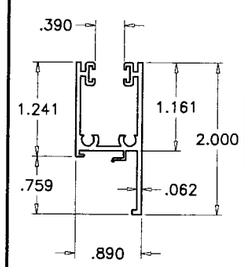

PANEL TOP RAIL

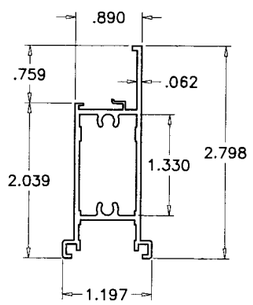

PANEL BOTTOM RAIL

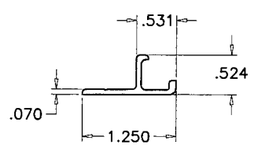

FIXED PANEL CLIP

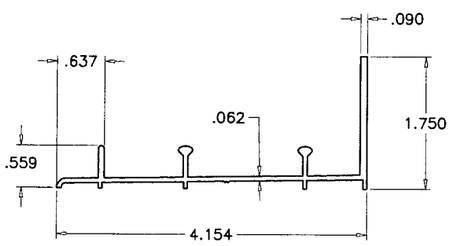

FRAME SILL

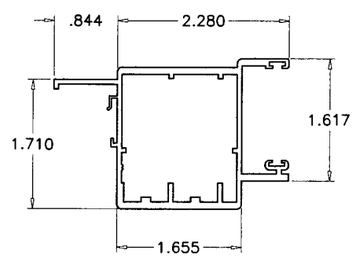

ASTRAGAL STILE

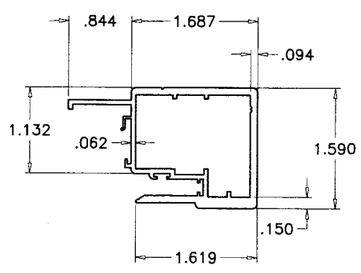

INTERIOR INTERLOCK

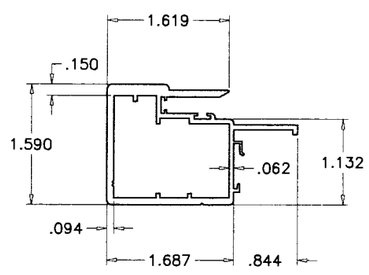

EXTERIOR INTERLOCK

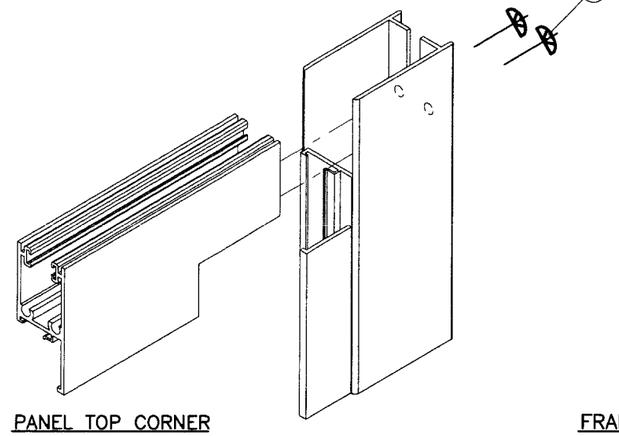

PANEL TOP CORNER

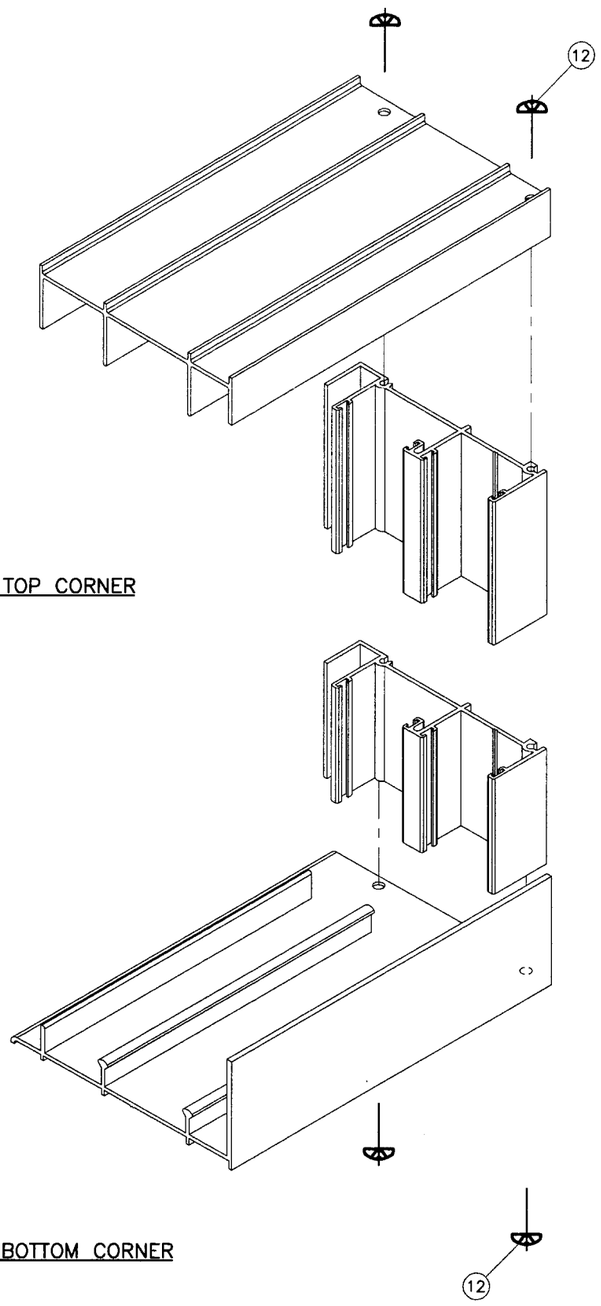

FRAME TOP CORNER

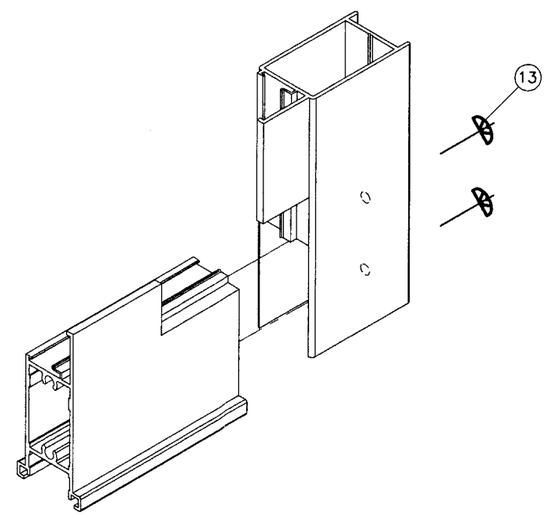

PANEL BOTTOM CORNER

FRAME BOTTOM CORNER

Engr: DR. HUMAYOUN FAROOQ
STRUCTURES
FLA. PE # 16557
C.A.N. 3538

JUL 18 2006

PRODUCT REVISED
as complying with the Florida Building Code
Acceptance No. 06-0406.07
Expiration Date FEB. 13, 2008
By
Miami-Dade Product Control Division

AL-FAROOQ CORPORATION
ENGINEERS, PLANNERS & PRODUCT DESIGN
1235 SW 87 AVE
MIAMI, FLORIDA 33174
TEL. (305) 264-8100 FAX. (305) 262-6978

COMP-ANL\W02-100LI

SGD-9200 ALUM. SLIDING GLASS DOOR (L.M.I.)

LAWSON INDUSTRIES INC.
8501 N.W. 90 STREET
MEDLEY, FL. 33166
TEL. (305) 696-8660 FAX (305) 696-6006

revisions:

no	date	by	description
A	03.16.06		NO CHANGE THIS SHEET
B	07.12.06		NO CHANGE THIS SHEET

date: 10-21-02
scale: 1/2" = 1"
dr. by: HAMID
chk. by:

drawing no.
W02-100

sheet 5 of 5