MIAMI-DADE COUNTY

BUILDING CODE COMPLIANCE OFFICE (BCCO)
PRODUCT CONTROL DIVISION

MIAMI-DADE COUNTY, FLORIDA
METRO-DADE FLAGLER BUILDING
140 WEST FLAGLER STREET, SUITE 1603
MIAMI, FLORIDA 33130-1563
(305) 375-2901 FAX (305) 375-2908
www.buildingcodeonline.com

NOTICE OF ACCEPTANCE (NOA)

Lawson Industries, Inc.
8501 N. W. 90 Street
Medley, FL 33166

SCOPE:

This NOA is being issued under the applicable rules and regulations governing the use of construction materials. The documentation submitted has been reviewed by Miami-Dade County Product Control Division and accepted by the Board of Rules and Appeals (BORA) to be used in Miami Dade County and other areas where allowed by the Authority Having Jurisdiction (AHJ).

This NOA shall not be valid after the expiration date stated below. The Miami-Dade County Product Control Division (In Miami Dade County) and/or the AHJ (in areas other than Miami Dade County) reserve the right to have this product or material tested for quality assurance purposes. If this product or material fails to perform in the accepted manner, the manufacturer will incur the expense of such testing and the AHJ may immediately revoke, modify, or suspend the use of such product or material within their jurisdiction. BORA reserves the right to revoke this acceptance, if it is determined by Miami-Dade County Product Control Division that this product or material fails to meet the requirements of the applicable building code.

This product is approved as described herein, and has been designed to comply with the Florida Building Code, including the High Velocity Hurricane Zone.

DESCRIPTION: Series "SH-7700" Aluminum Single Hung Window –L.M.I.

APPROVAL DOCUMENT: Drawing No. **W01-66**, titled "SH-7700 Aluminum Single Hung Window", sheets 1 through 4 of 4, prepared by AL-Farooq Corporations, dated 09/26/01 and last revised on October 10, 2006, signed and sealed by Dr. Humayoun Farooq, P.E., bearing the Miami-Dade County Product Control Renewal stamp with the Notice of Acceptance number and expiration date by the Miami-Dade County Product Control Division.

MISSILE IMPACT RATING: Large and Small Missile Impact Resistant

LABELING: Each unit shall bear a permanent label with the manufacturer's name or logo, city, state and following statement: "Miami-Dade County Product Control Approved", unless otherwise noted herein.

RENEWAL of this NOA shall be considered after a renewal application has been filed and there has been no change in the applicable building code negatively affecting the performance of this product.

TERMINATION of this NOA will occur after the expiration date or if there has been a revision or change in the materials, use, and/or manufacture of the product or process. Misuse of this NOA as an endorsement of any product, for sales, advertising or any other purposes shall automatically terminate this NOA. Failure to comply with any section of this NOA shall be cause for termination and removal of NOA.

ADVERTISEMENT: The NOA number preceded by the words Miami-Dade County, Florida, and followed by the expiration date may be displayed in advertising literature. If any portion of the NOA is displayed, then it shall be done in its entirety.

INSPECTION: A copy of this entire NOA shall be provided to the user by the manufacturer or its distributors and shall be available for inspection at the job site at the request of the Building Official.

This NOA **revises** & **renews** NOA # **01-1009.01** consists of this page 1 and evidence page E-1, as well as approval document mentioned above.

The submitted documentation was reviewed by **Ishaq I. Chanda, P.E.**

PRODUCT CONTROL ACCEPTED

11/6/6

NOTICE OF ACCEPTANCE: EVIDENCE SUBMITTED

A. DRAWINGS (Transferred from file # **01-1009.01**)

1. Manufacturer's die drawings and sections.
2. Drawing No. **W01-66**, titled "SH-7700 Aluminum Single Hung Window", sheets 1 thru 4 of 4, prepared by AL-Farooq Corporations, dated 09/26/01 and last revised on October 10, 2006, signed & sealed by Dr. Humayoun Farooq, P.E.

B. TESTS (Transferred from file # **01-1009.01**) Original test report conducted per SFBC, PA 201, 202 and 203-94, now termed as FBC, TAS 201, 202 & 203-94.

Test reports on 1) Air Infiltration Test, per SFBC, PA 202-94
2) Uniform Static Air Pressure Test, Loading per SFBC, PA 202-94
3) Water Resistance Test, per SFBC, PA 202-94
4) Large Missile Impact Test per SFBC, PA 201-94
5) Cyclic Wind Pressure Loading per SFBC, PA 203-94
6) Forced Entry Test, per SFBC 3603.2 (b) and PA 202-94

along with marked-up drawings and installation diagram of an aluminum single hung window, prepared by Fenestration Testing Laboratory, Inc., Test Report No. **FTL-01016**, dated 4/3/01, signed and sealed by Luis A. Figueredo, P.E.

C. CALCULATIONS

1. Anchor Verification Calculations complying w/ FBC 2004, prepared by AL-Farooq Corporation, dated 02-27-06 and last revised on 1010-2006, signed and sealed by Humayoun Farooq, P.E
2. Anchor Calculations and structural analysis, prepared by Al Farooq Corporation, dated 11/29/01, signed and sealed by Dr. Humayoun Farooq, P.E. (Transferred from file # **01-1009.01**)
2. Glazing Complies with ASTM E 1300-02

D. QUALITY ASSURANCE

1. Miami Dade Building Code Compliance Office (BCCO).

E. MATERIAL CERTIFICATIONS

1. Notice of Acceptance No. **01-0205.02,** issued to Solutia Inc., for "PVB interlayer", expiring on 03/04/09.
2. Notice of Acceptance No. **02-1205.03,** issued to Security Impact Glass Holdings L.L.C., for "SAF-GLAS,", expiring on 12/16/07.
3 Notice of Acceptance No. 01-1204.01, issued to E.I. DuPont DeNemours for "Sentry Glass ® Plus", expiring on 01/14/07.

F. STATEMENTS

1. Statement letters of Compliance and "no financial interest", both dated 03/16/06, signed and sealed by Humayoun Farooq, P.E.
2. Statement of Lab compliance letter, part of test report.

G. OTHER (Transferred from file ***# 01-1009.01***)

1. This NOA **revises** & **renews** NOA # **01-1009.01**, expiring 11-27-2006.

Ishaq I. Chanda

Ishaq I. Chanda, P.E.
Product Control Examiner
NOA No 06-0316.02
Expiration Date: December 27, 2011
Approval Date: November 02, 2006

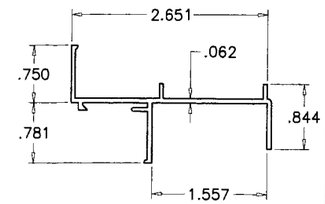

FRAME HEAD

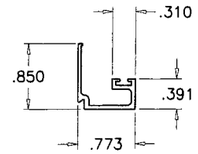

GLAZING BEAD

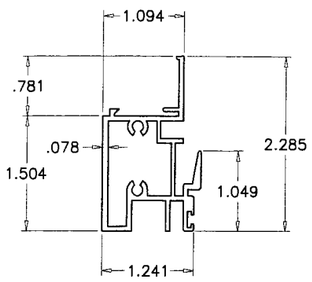

FIXED MEETING RAIL

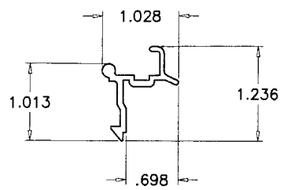

SNAP LATCH

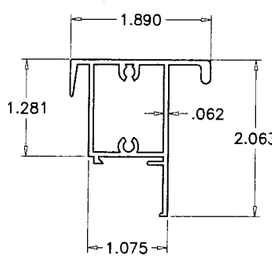

VENT TOP RAIL

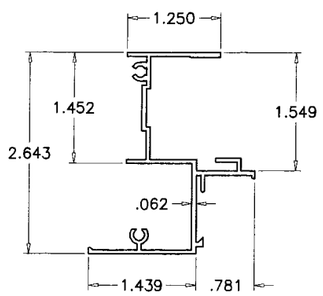

FRAME JAMB

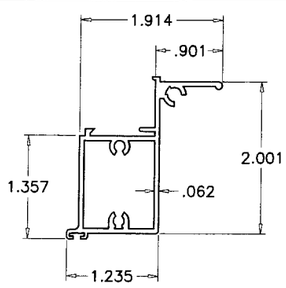

VENT BOTTOM RAIL

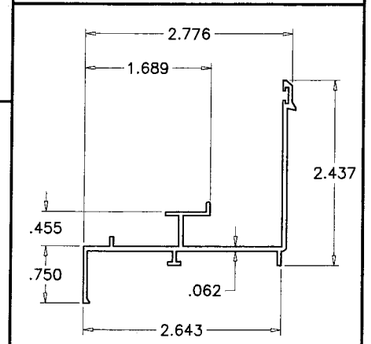

FRAME SILL

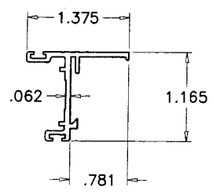

VENT SIDE RAIL

DAYLITE OPENINGS:

DLO WIDTH = WINDOW WIDTH – 4.438 (FIXED)
= WINDOW WIDTH – 5.625 (VENT)

DLO HEIGHT = (WINDOW HT/2) – 4.125

THESE WINDOWS ARE RATED FOR LARGE MISSILE IMPACT. SHUTTERS ARE NOT REQUIRED.

TYPICAL ANCHORS: SEE ELEV. FOR SPACING

A – 1/4" TAPCONS (ELCO)

INTO 2BY WOOD BUCKS OR WOOD STRUCTURE
1-3/8" MIN. PENETRATION INTO WOOD

THRU 1BY BUCKS INTO MASONRY OR DIRECTLY INTO MASONRY
1-1/4" MIN. EMBED INTO CONC. OR MASONRY

B – 1/4" HILTI KWIK CON II

INTO 2BY WOOD BUCKS OR WOOD STRUCTURE
1-3/8" MIN. PENETRATION INTO WOOD

THRU 1BY BUCKS INTO MASONRY OR DIRECTLY INTO MASONRY
1-1/4" MIN. EMBED INTO CONC. OR MASONRY

1/4" DIA. SELF DRILLING SCREWS GRADE 5 CRS

INTO METAL STRUCTURES

STEEL : 12 GA. MIN. (Fy = 36 KSI MIN.)
ALUMINUM : 1/8" THK. MIN. (6063-T5 MIN.)
(STEEL IN CONTACT WITH ALUMINUM TO BE PLATED OR PAINTED)

#10 SMS OR SELF DRILLING SCREWS

INTO DADE COUNTY APPROVED MULLIONS (MIN. THK. = .102")
(NO SHIM SPACE)

ANCHOR EDGE DISTANCES

INTO CONCRETE AND MASONRY = 1-5/8" MIN.
INTO WOOD STRUCTURE = 1" MIN. (AT HEAD & JAMBS)
INTO WOOD STRUCTURE = 5/8" MIN. (AT SILL)
INTO METAL STRUCTURE = 5/8" MIN.

SEALANTS:

ALL FRAME AND VENT CORNERS AND SILL INSTALLATION SCREWS SEALED WITH SEALANT.

WEEPHOLES:

W1 = 1/2" WEEP NOTCH AT EACH END
W2 = 3/16" X 1" WEEP HOLE AT 4-1/4" FROM EACH END

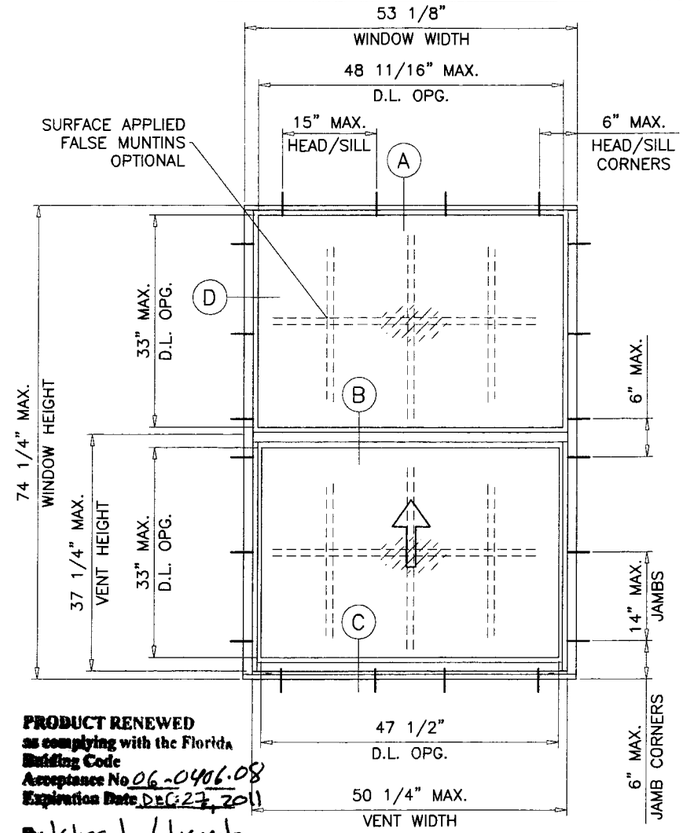

PRODUCT RENEWED
as complying with the Florida Building Code
Acceptance No. 06-0406.08
Expiration Date DEC. 27, 2011
By Ichg L. Chanda
Miami-Dade Product Control Division

TYPICAL ELEVATION
TESTED UNIT

SH-7700 ALIMINUM SINGLE HUNG WINDOW

DESIGN LOAD RATING FOR THESE WINDOWS TO BE AS PER CHARTS SHOWN ON SHEET 2.

THIS PRODUCT HAS BEEN DESIGNED AND TESTED TO COMPLY WITH THE REQUIREMENTS OF THE FLORIDA BUILDING CODE 2004 EDITION INCLUDING HIGH VELOCITY HURRICANE ZONE (HVHZ).

WOOD BUCKS BY OTHERS, MUST BE ANCHORED PROPERLY TO TRANSFER LOADS TO THE STRUCTURE.

ANCHORS SHALL BE AS LISTED, SPACED AS SHOWN ON DETAILS, ANCHORS EMBEDMENT TO BASE MATERIAL SHALL BE BEYOND WALL DRESSING OR STUCCO.

ANCHORING OR LOADING CONDITIONS NOT SHOWN IN THESE DETAILS ARE NOT PART OF THIS APPROVAL.

A LOAD DURATION INCREASE IN ALLOWABLE STRESS IS USED IN DESIGN OF ANCHORS INTO WOOD ONLY.

MATERIALS INCLUDING BUT NOT LIMITED TO STEEL/METAL SCREWS, THAT COME INTO CONTACT WITH OTHER DISSIMILAR MATERIALS SHALL MEET THE REQUIREMENTS OF 2004 FLORIDA BLDG. CODE SECTION 2003.8.4.

Engr: DR. HUMAYOUN FAROOQ
STRUCTURES
FLA. PE # 16557
C.A.N. 3538

OCT 1 0 2006

AL-FAROOQ CORPORATION
ENGINEERS & PRODUCT DEVELOPMENT
1235 S.W. 87 AVE
MIAMI, FLORIDA 33174
TEL. (305) 264-8100 FAX. (305) 262-6978
COMP-ANL\W01-66LI

SH-7700 ALIMINUM SINGLE HUNG WINDOW

LAWSON INDUSTRIES INC.
8501 N.W. 90 STREET
MEDLEY, FL. 33166
TEL. (305) 696-8660 FAX (305) 696-6006

revisions:

no	date	by	description
A	11.29.01		REV. PER BCCO COMMENTS
B	02.14.06		UPDATED FOR 2004 FBC

date: 09-26-01
scale: 1/2"=1'-0"
dr. by: HAMID
chk. by:

drawing no.
W01-66

DESIGN LOAD CAPACITY – PSF							
		ANNEALED OR HEAT STREN'D GLASS					
		ANCHOR TYPE 'A'			ANCHOR TYPE 'B'		
WINDOW DIMS.		GLASS TYPE '1'	GLASS TYPE '2'	GLASS TYPE '3'	GLASS TYPE '1'	GLASS TYPE '2'	GLASS TYPE '3'
WIDTH	HEIGHT	EXT. (+) INT. (–)	EXT. (+) INT. (–)	EXT. (+) INT. (–)	EXT. (+) INT. (–)	EXT. (+) INT. (–)	EXT. (+) INT. (–)
19–1/8"	26" (4)	90.0	80.0	80.0	–	–	–
26–1/2"		90.0	80.0	80.0	–	–	–
37"		90.0	80.0	80.0	–	–	–
53–1/8		90.0	80.0	80.0	–	–	–
19–1/8"	38–3/8" (4)	90.0	80.0	80.0	–	–	–
26–1/2"		90.0	80.0	80.0	–	–	–
37"		90.0	80.0	80.0	–	–	–
53–1/8		77.5	77.5	77.5	90.0	80.0	80.0
19–1/8"	50–5/8" (6)	90.0	80.0	80.0	–	–	–
26–1/2"		90.0	80.0	80.0	–	–	–
37"		90.0	80.0	80.0	–	–	–
53–1/8		63.6	63.6	63.6	90.0	80.0	80.0
19–1/8"	59" (6)	90.0	80.0	80.0	–	–	–
26–1/2"		90.0	80.0	80.0	–	–	–
37"		90.0	80.0	80.0	–	–	–
53–1/8		57.8	57.8	57.8	90.0	80.0	80.0
19–1/8"	63" (6)	90.0	80.0	80.0	–	–	–
26–1/2"		90.0	80.0	80.0	–	–	–
37"		90.0	80.0	80.0	–	–	–
53–1/8		55.7	55.7	55.7	90.0	80.0	80.0
19–1/8"	74–1/4" (6)	90.0	80.0	80.0	–	–	–
26–1/2"		90.0	80.0	80.0	–	–	–
37"		88.0	80.0	80.0	–	–	–
53–1/8		51.4	51.4	51.4	80.0	80.0	80.0

* NO. IN PARENTHESIS INDICATE NO. OF ANCHORS PER JAMB.

NOTE:
GLASS CAPACITIES ON THIS SHEET ARE BASED ON ASTM E1300–02 (3 SEC. GUSTS).

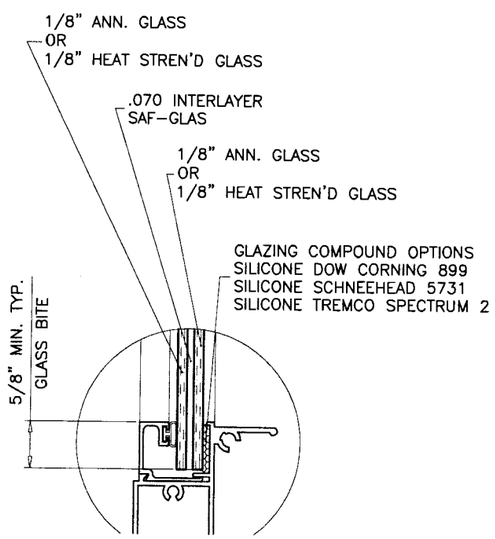

GLASS TYPE '1'

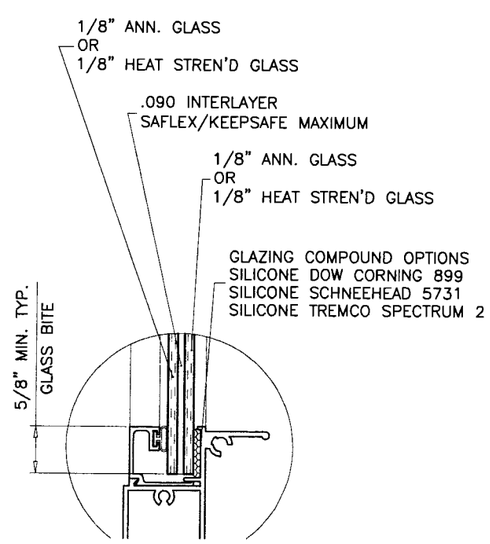

GLASS TYPE '2'

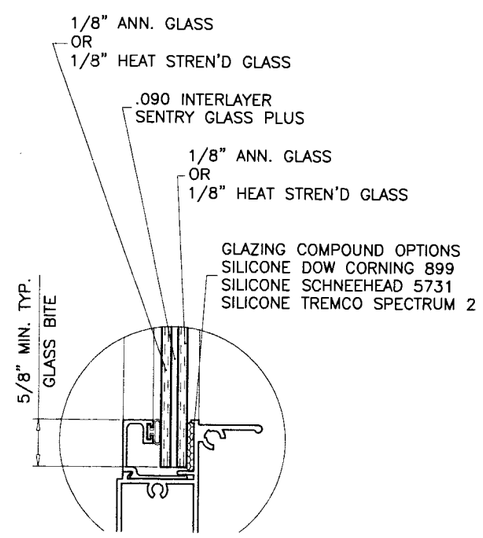

GLASS TYPE '3'

GLAZING OPTIONS

LARGE MISSILE IMPACT RESISTANT GLASS, SHUTTERS ARE NOT REQUIRED

PRODUCT RENEWED
as complying with the Florida Building Code
Acceptance No. 06-0406.08
Expiration Date DEC 27, 2011
By Ishaq I. Chanda
Miami-Dade Product Control Division

Engr: DR. HUMAYOUN FAROOQ
STRUCTURES
FLA. PE # 16557
C.A.N. 3538

OCT 1 0 2006

AL-FAROOQ CORPORATION
ENGINEERS & PRODUCT DEVELOPMENT
1235 S.W. 87 AVE
MIAMI, FLORIDA 33174
TEL. (305) 264-8100 FAX. (305) 262-6978

COMP–ANL\W01–66L

SH–7700 ALUMINUM SINGLE HUNG WINDOW

LAWSON INDUSTRIES INC.
8501 N.W. 90 STREET
MEDLEY, FL. 33166
TEL. (305) 696–8660 FAX (305) 696–6006

revisions:			
no	date	by	description
B	02.14.06		UPDATED FOR 2004 FBC

date: 09–26–01
scale: 1/2"=1'–0"
dr. by: HAMID
chk. by:

drawing no.
W01–66

sheet 2 of 4

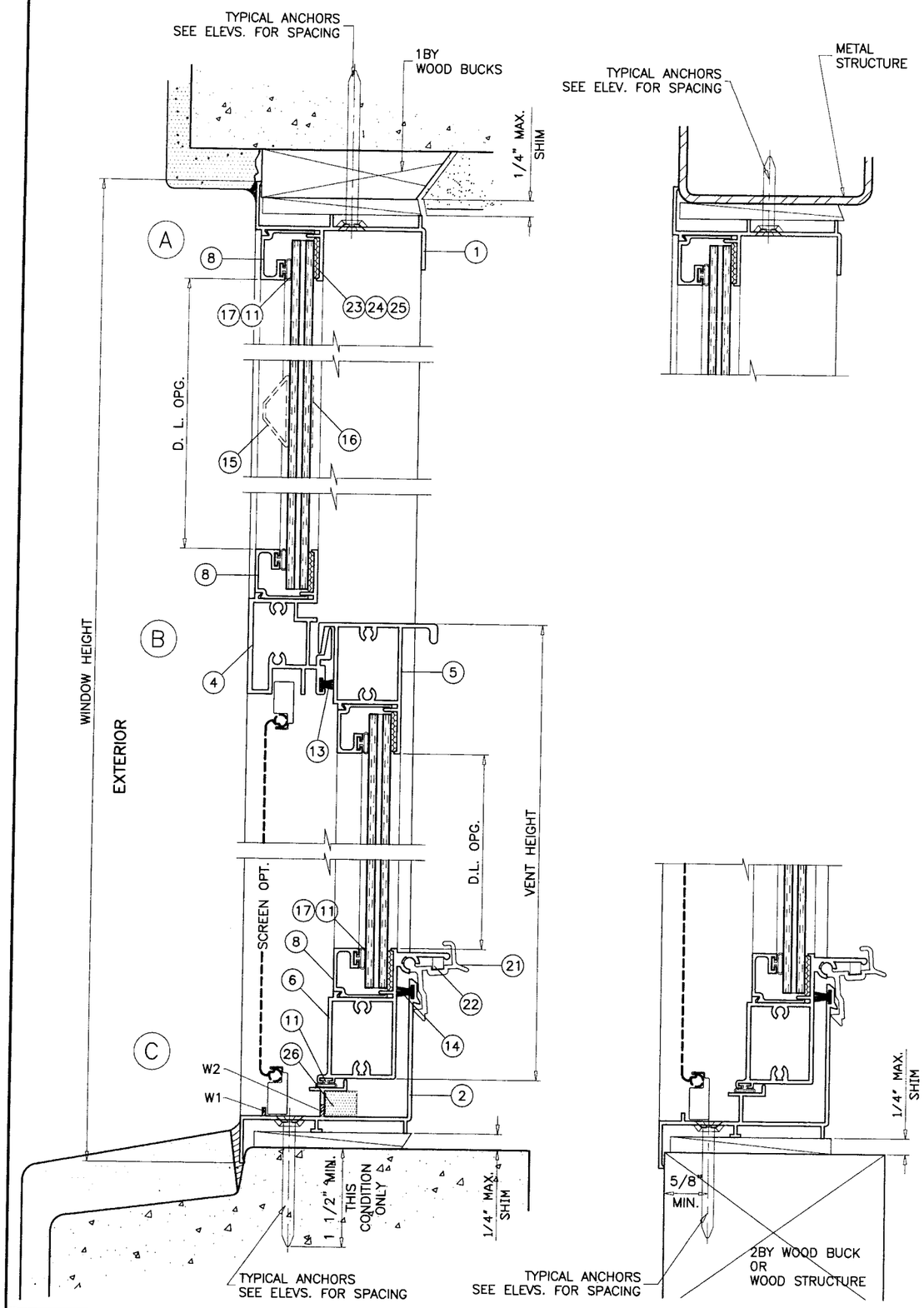

ITEM NO.	PART #	QUANTITY	DESCRIPTION	MATERIAL	MANF./SUPPLIER/REMARKS
1	L-7701	1	FLANGE FRAME HEAD	6063-T5	–
2	L-7702	1	FLANGE FRAME SILL	6063-T5	–
3	L-7703	2	FLANGE FRAME JAMB	6063-T5	–
4	L-7704	1	FRAME FIXED MEETING RAIL	6063-T6	–
5	L-7705	1	VENT MEETING (TOP) RAIL	6063-T6	–
6	L-7706	1	VENT BOTTOM (LATCH) RAIL	6063-T6	–
7	L-7707	1	VENT JAMB (SIDE) RAIL	6063-T6	–
8	L-7708	AS REQ'D.	GLAZING BEAD (3/8")	6063-T5	–
9	FS-006	AS REQD.	FRAME ASSEMBLY SCREWS	–	#8 X 3/4" PH PHILLIPS
11	L-7531	AS REQ'D.	BOTTOM RAIL W'STRIPPING	VINYL	1/4" DIA. BULB #3033
12	PWS-003	AS REQ'D.	FIN SEAL WEATHERSTRIP	–	.187"X.210" (7820-6001-9)
13	PWS-005	AS REQ'D.	FIN SEAL WEATHERSTRIP	–	.187"X.350" (7834-6001-7)
14	PWS-009	AS REQ'D.	FIN SEAL WEATHERSTRIP	–	.187"X.310" (7830-6001-1)
15	L-7512	OPTIONAL	EXTERIOR FALSE MUNTIN	ALUMINUM	
16	L-7513	OPTIONAL	INTERIOR FALSE MUNTIN	ALUMINUM	
17	L-7718	AS REQ'D.	GLAZING BEAD WEDGE	VINYL	WEDGE #GV-010
18	L-7723	1	SASH BALANCE CAM/GUIDE	–	(2 X VENT)
19	L-7725	2	RIGID VINYL SASH STOP	–	(2 X FRAME)
20	L-7727	2	BLOCK & TACKLE BALANCE	–	BSI BALANCE SYSTEMS
21	L-7539	2/ VENT	VENT LATCH	–	AT 6" FROM EACH END
22	L-7523	2/ VENT	VENT LATCH SPRING	–	–
23	–	AS REQ'D.	GLAZING COMPOUND	SILICONE	SCHNEE-MOREHEAD 5731
24	–	AS REQ'D.	GLAZING COMPOUND	SILICONE	DOW CORNING 899
25	–	AS REQ'D.	GLAZING COMPOUND	SILICONE	TREMCO SPECTREM 2
26	–	2	1/2" X 1/2" X 2" LONG PAD	FOAM	AT EACH END

WOOD BUCKS NOT BY LAWSON, MUST SUSTAIN LOADS IMPOSED BY GLAZING SYSTEM AND TRANSFER THEM TO THE BUILDING STRUCTURE.

PRODUCT RENEWED
as complying with the Florida
Building Code
Acceptance No 06-0406.08
Expiration Date DEC 27, 2011
By Ishaq I. Chanda
Miami-Dade Product Control
Division

Engr: DR. HUMAYOUN FAROOQ
STRUCTURES
FLA. PE # 16557
C.A.N. 3538

OCT 1 0 2006

AL-FAROOQ CORPORATION
ENGINEERS & PRODUCT DEVELOPMENT
1235 S.W. 87 AVE
MIAMI, FLORIDA 33174
TEL. (305) 264-8100 FAX. (305) 262-6978

COMP-ANL\W01-66LI

SH-7700 ALUMINUM SINGLE HUNG WINDOW

LAWSON INDUSTRIES INC.
8501 N.W. 90 STREET
MEDLEY, FL. 33166
TEL. (305) 696-8660 FAX (305) 696-6006

revisions:

no	date	by	description
B	02.14.06		NO CHANGE THIS SHEET

date: 09-26-01
scale: 1/2" = 1"
dr. by: HAMID
chk. by:

drawing no.
W01-66

sheet 3 of 4

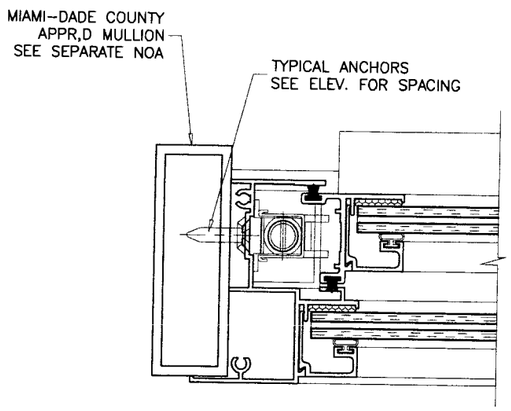

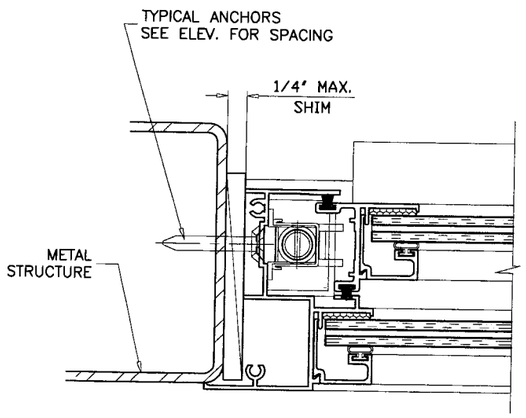

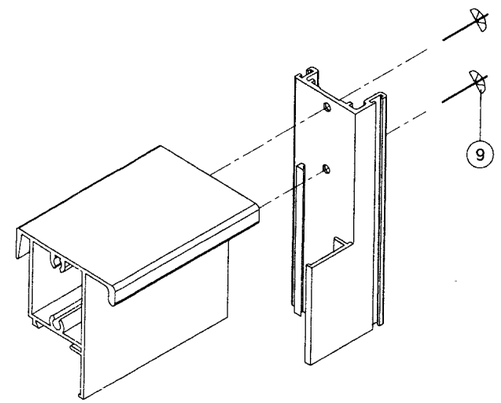

VENT TOP CORNER

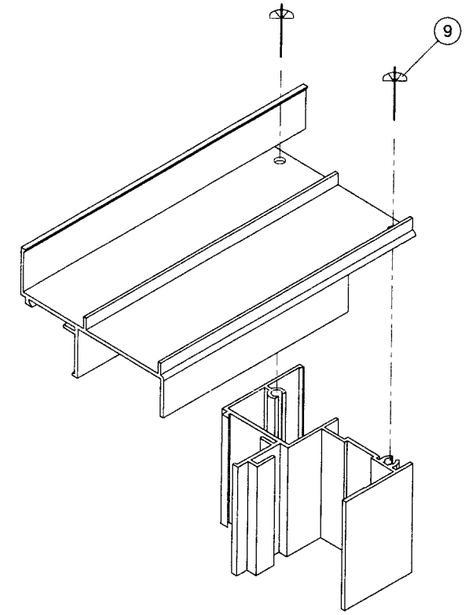

FRAME TOP CORNER

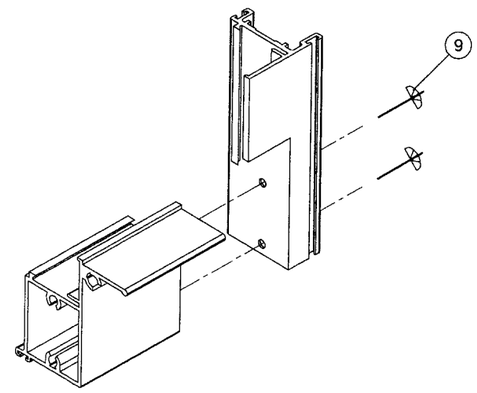

VENT BOTTOM CORNER

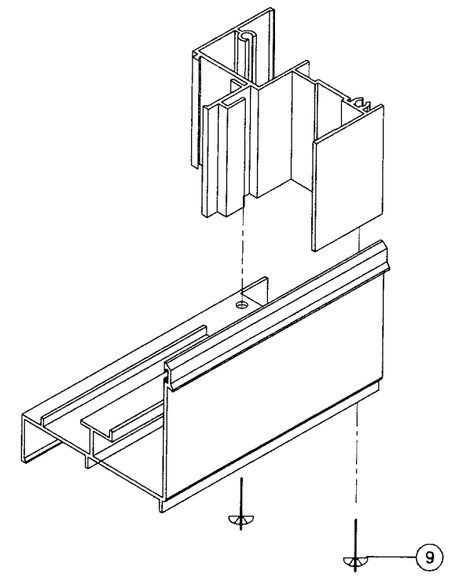

FRAME BOTTOM CORNER

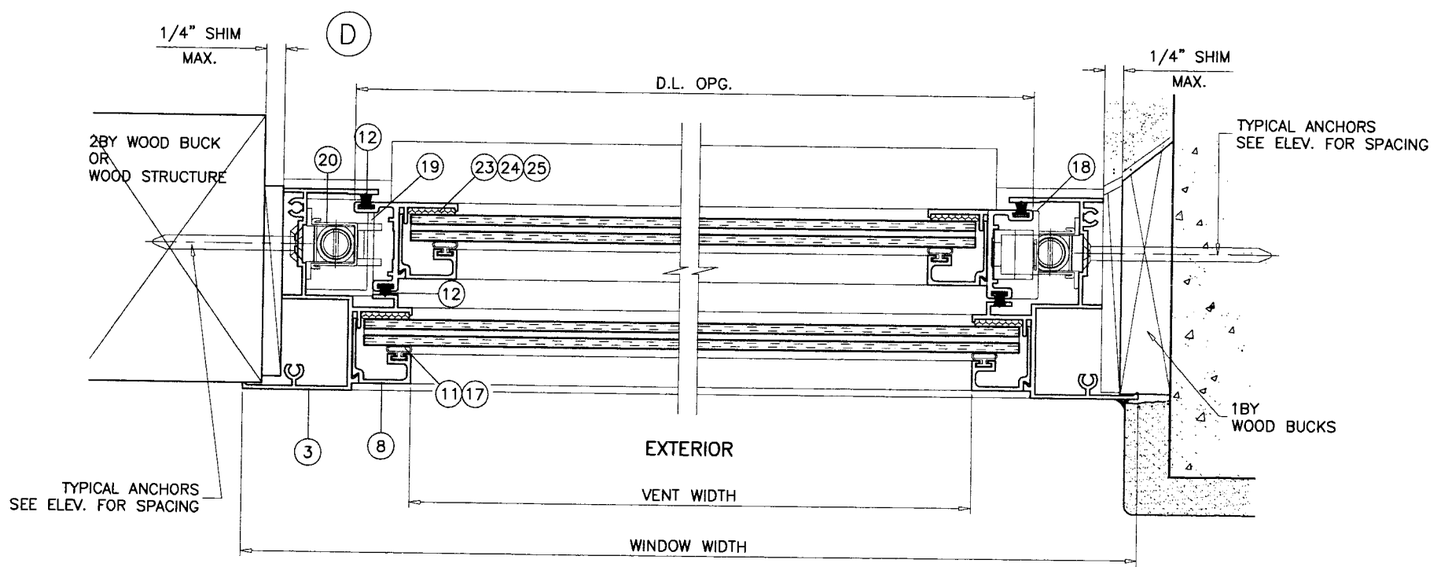

PRODUCT RENEWED
as complying with the Florida Building Code
Acceptance No 06-0406.08
Expiration Date DEC 27, 2011
By Ishay I. Chanta
Miami-Dade Product Control Division

Engr: DR. HUMAYOUN FAROOQ
STRUCTURES
FLA. PE # 16557
C.A.N. 3538

OCT 1 0 2006

AL-FAROOQ CORPORATION
ENGINEERS & PRODUCT DEVELOPMENT
1235 S.W. 87 AVE
MIAMI, FLORIDA 33174
TEL. (305) 264-8100 FAX. (305) 262-6978

COMP-ANL\W01-66LI

SH-7700 ALIMINUM SINGLE HUNG WINDOW

LAWSON INDUSTRIES INC.
8501 N.W. 90 STREET
MEDLEY, FL. 33166
TEL. (305) 696-8660 FAX (305) 696-6006

revisions:

no	date	by	description
B	02.14.06		NO CHANGE THIS SHEET

date: 09-26-01
scale: 1/2" = 1"
dr. by: HAMID
chk. by:

drawing no.
W01-66

sheet 4 of 4