MIAMI-DADE COUNTY
BUILDING CODE COMPLIANCE OFFICE (BCCO)
PRODUCT CONTROL DIVISION

MIAMI-DADE COUNTY, FLORIDA
METRO-DADE FLAGLER BUILDING

140 WEST FLAGLER STREET, SUITE 1603
MIAMI, FLORIDA 33130-1563
(305) 375-2901 FAX (305) 375-2908
www.buildingcodeonline.com

NOTICE OF ACCEPTANCE (NOA)

Hurst Awning Company, Inc.
6865 N.W. 36th Avenue
Miami, Florida 33147

SCOPE:
This NOA is being issued under the applicable rules and regulations governing the use of construction materials. The documentation submitted has been reviewed by Miami-Dade County Product Control Division and accepted by the Board of Rules and Appeals (BORA) to be used in Miami Dade County and other areas where allowed by the Authority Having Jurisdiction (AHJ).

This NOA shall not be valid after the expiration date stated below. The Miami-Dade County Product Control Division (In Miami Dade County) and/or the AHJ (in areas other than Miami Dade County) reserve the right to have this product or material tested for quality assurance purposes. If this product or material fails to perform in the accepted manner, the manufacturer will incur the expense of such testing and the AHJ may immediately revoke, modify, or suspend the use of such product or material within their jurisdiction. BORA reserves the right to revoke this acceptance, if it is determined by Miami-Dade County Product Control Division that this product or material fails to meet the requirements of the applicable building code.

This product is approved as described herein, and has been designed to comply with the High Velocity Hurricane Zone of the Florida Building Code.

DESCRIPTION: 0.0312"(min.) Galvanized Steel Storm Panels Shutter

APPROVAL DOCUMENT: Drawing No. 06-343, titled "The 24 Steel Storm Panel Shutter", sheets 1 through 6 of 6, prepared by Thornton-Tomasetti Group, dated April 04, 2006, last revision #0 dated April 04, 2006, signed and sealed by J. W. Knezevich, P.E., bearing the Miami-Dade County Product Control Revision stamp with the Notice of Acceptance number and expiration date by the Miami-Dade County Product Control Division.

MISSILE IMPACT RATING: Large and Small Missile Impact

LABELING: Each panel shall bear a permanent label with the manufacturer's name or logo, city, state and the following statement: "Miami-Dade County Product Control Approved", unless otherwise noted herein.

RENEWAL of this NOA shall be considered after a renewal application has been filed and there has been no change in the applicable building code negatively affecting the performance of this product.

TERMINATION of this NOA will occur after the expiration date or if there has been a revision or change in the materials, use, and/or manufacture of the product or process. Misuse of this NOA as an endorsement of any product, for sales, advertising or any other purposes shall automatically terminate this NOA. Failure to comply with any section of this NOA shall be cause for termination and removal of NOA.

ADVERTISEMENT: The NOA number preceded by the words Miami-Dade County, Florida, and followed by the expiration date may be displayed in advertising literature. If any portion of the NOA is displayed, then it shall be done in its entirety.

INSPECTION: A copy of this entire NOA shall be provided to the user by the manufacturer or its distributors and shall be available for inspection at the job site at the request of the Building Official.

This NOA **revises NOA #02-0627.01** and consists of this page 1, evidence submitted pages E-1 & E-2 as well as approval document mentioned above.

The submitted documentation was reviewed by **Helmy A. Makar, P.E.**

PRODUCT CONTROL ACCEPTED

Helmy A. Makar
06/15/2006

NOA No 06-0410.01
Expiration Date: 08/30/2007
Approval Date: 06/15/2006

Hurst Awning Company, Inc.

NOTICE OF ACCEPTANCE: EVIDENCE SUBMITTED

1. EVIDENCE SUBMITTED UNDER PREVIOUS APPROVAL # 02-0627.01

A. DRAWINGS

1. *Drawing No. 02-267, titled " The 24 Steel Storm Panel Shutter", sheets 1 through 6 of 6, prepared by Knezevich & Associates, Inc., dated June 25, 2002, last revision #2 dated August 30, 2002, signed and sealed by V. J. Knezevich, P.E.*

B. TESTS

1. *Test report on 1) Uniform Static Air Pressure test, per SFBC PA 202-94*
   2) Large Missile Impact Test, per SFBC PA 201-94
   3) Cyclic Wind Pressure Loading per SFBC PA 203-94
   along with marked-up drawings and installation diagram of 0.0312" Galvanized Steel Storm Panels Shutter, prepared by Construction Testing Corporation, Test Report No. 02-005, dated April 11, 2002, signed and sealed by Yamil G. Kuri, P.E.
2. *Test report on 1) Uniform Static Air Pressure test, per SFBC PA 202-94*
   2) Large Missile Impact Test, per SFBC PA 201-94
   3) Cyclic Wind Pressure Loading per SFBC PA 203-94
   along with marked-up drawings and installation diagram of 0.050" Aluminum Storm Panels Shutter, prepared by Construction Testing Corporation, Test Report No. 99-023, dated May 14, 1999, signed and sealed by Yamil G. Kuri, P.E.
   This test is used to qualify the Slide Track Assembly.

C. CALCULATIONS

1. *Comparative Analysis and Anchor Calculations, pages 01 through 47, prepared by Knezevich and Associates Inc., dated June 24, 2002, signed and sealed by V.J. Knezevich, P.E.*

D. MATERIAL CERTIFICATIONS

1. *Mill Certificate from Charter Steel Trading Co., Inc.*
2. *Tensile Test Report.*

E. STATEMENTS

1. *Statement letter of conformance by Knezevich and Associates Inc., dated June 24, 2002, signed and sealed by V.J. Knezevich, P.E.*

2. NEW EVIDENCE SUBMITTED

A. DRAWINGS

1. *Drawing No. 06-343, titled "The 24 Steel Storm Panel Shutter", sheets 1 through 6 of 6, prepared by Thornton-Tomasetti Group, dated April 04, 2006, last revision #0 dated April 04, 2006, signed and sealed by J. W. Knezevich, P.E.*

Helmy A. Makar, P.E.
Product Control Examiner
NOA No 06-0410.01
Expiration Date: 08/30/2007
Approval Date: 06/15/2006

NOTICE OF ACCEPTANCE: EVIDENCE SUBMITTED

B. TESTS

1. None.

C. CALCULATIONS

1. None.

D. QUALITY ASSURANCE

1. By Miami-Dade County Building Code Compliance Office.

E. MATERIAL CERTIFICATION:

1. None.

Helmy A. Makar, P.E.
Product Control Examiner
NOA No 06-0410.01
Expiration Date: 08/30/2007
Approval Date: 06/15/2006

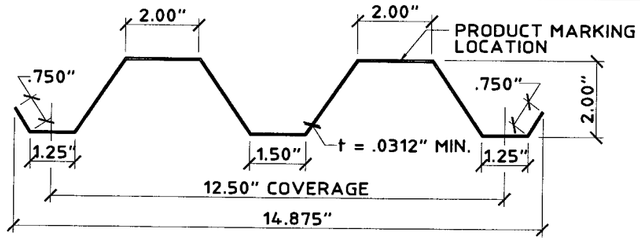

1 GALVANIZED STEEL STORM PANEL
SCALE: 3" = 1' - 0"

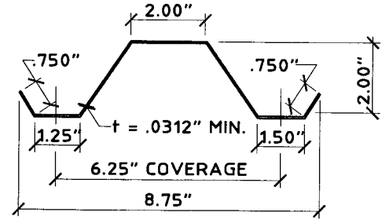

ONE HALF PANEL PER OPENING MAYBE USED AS REQUIRED TO COVER OPENING.

2 GALVANIZED STEEL HALF STORM PANEL
SCALE: 3" = 1' - 0"

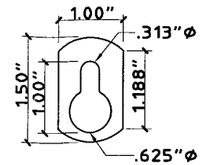

3 (1/16 GALVANIZED STEEL) KEYHOLE WASHER (OPTIONAL)
SCALE : HALF SIZE

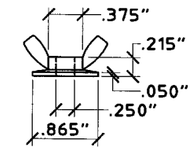

4 (ZAMAC 3 ALLOY) WASHERED WINGNUT
SCALE : HALF SIZE

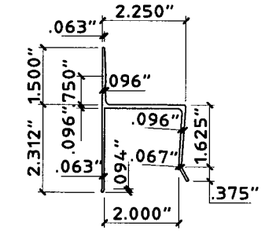

5 "h" HEADER
SCALE: 3" = 1' - 0"

GENERAL NOTES:

1. THESE APPROVAL DOCUMENTS REPRESENT A SHUTTER SYSTEM ANALYZED WITH THE PROVISION SET FOR THE ISSUANCE OF A NOTICE OF ACCEPTANCE (NOA) BY MIAMI-DADE COUNTY PRODUCT CONTROL DIVISION FOR THE HIGH VELOCITY HURRICANE ZONE (HVHZ) OF THE FLORIDA BUILDING CODE 2004 EDITION WITH 2005 SUPPLEMENT.
2. NO ALLOWABLE STRESS HAS BEEN USED IN THE DESIGN OF THIS PRODUCT. WIND LOAD DURATION FACTOR Cd = 1.6 WAS USED FOR WOOD LAG SCREW DESIGN.
3. DETERMINE THE POSITIVE AND NEGATIVE DESIGN LOADS TO USE WHEN REFERENCING THESE DOCUMENTS IN ACCORDANCE WITH THE GOVERNING CODE AND GOVERNING WIND VELOCITY. FOR WIND LOAD CALCULATIONS IN ACCORDANCE WITH ASCE 7-02. A DIRECTIONALITY FACTOR OF Kd = 0.85 SHALL BE USED.
4. THESE APPROVAL DOCUMENTS ARE GENERIC AND DO NOT INCLUDE INFORMATION FOR SITE-SPECIFIC APPLICATION OF THIS SHUTTER SYSTEM.
5. USE OF THESE APPROVAL DOCUMENTS COMPLY WITH CHAPTER 61G15-23 OF THE FLORIDA ADMINISTRATIVE CODE.
6. THESE APPROVAL DOCUMENTS ARE SUITABLE TO BE APPLIED BY THE CONTRACTOR PROVIDED THE CONTRACTOR DOES NOT DEVIATE FROM THE CONDITIONS DETAILED HEREIN AND THE CONTRACTOR VERIFIES THAT THE EXISTING STRUCTURE DOES NOT DEVIATE IN EITHER FORM OR MATERIAL FROM THE STRUCTURAL SUBSTRATES DETAILED HEREIN.
7. ANY MODIFICATIONS OR ADDITIONS TO THESE APPROVAL DOCUMENTS WILL VOID THE APPROVAL DOCUMENTS.
8. WHEN THE SITE CONDITIONS DEVIATE FROM THESE APPROVAL DOCUMENTS, THE BUILDING OFFICIAL MAY ELECT ONE OF THE FOLLOWING OPTIONS:
   A) REQUIRE THAT SITE SPECIFIC DOCUMENTS BE PREPARED, SIGNED, DATED AND SEALED BY A LICENSED ENGINEER OR REGISTERED ARCHITECT, WHICH DETAIL AND JUSTIFY THE DEVIATION. SAID DOCUMENTS SHALL BE SUBMITTED TO THE PRODUCT ENGINEER FOR REVIEW AS A CONDITION TO THE BUILDING OFFICIAL GRANTING HIS/HER APPROVAL.
   B) REQUIRE THAT A ONE-TIME SITE SPECIFIC APPROVAL BE APPLIED FOR AND SECURED FROM THE MIAMI-DADE COUNTY PRODUCT CONTROL DIVISION

   WHEN THE SITE CONDITION DEVIATIONS OCCUR WITHIN THE HIGH VELOCITY HURRICANE ZONE AREAS ONLY OPTION "B" SHALL BE ACCEPTED BY THE BUILDING OFFICIAL.
9. PRODUCT MARKINGS SHALL BE WITHIN 12" OF ONE END OF THE PANEL WITH A MIN. OF ONE MARKING PER PANEL, AND SHALL BE LABELED AS FOLLOWS:
   HURST AWNING CO., INC.
   MIAMI , FLORIDA
   MIAMI-DADE COUNTY PRODUCT CONTROL APPROVED
10. STORM PANELS SHALL BE GALVANIZED STEEL CONFORMING TO A.S.T.M. A653, SQ. GRADE 80 G90 GALVANIZED COATING AND WITH THE FOLLOWING BARE METAL AND GALVANIZED THICKNESSES, AND MECHANICAL PROPERTIES:
    0.0297" MIN. BARE METAL THICKNESS (B.M.T.), WITH A MIN. Fy= 80.0 KSI
    0.0312" MIN. THICKNESS (AFTER GALVANIZING)
11. ALL EXTRUSIONS SHALL BE 6063-T6 ALUMINUM ALLOY, U.O.N
12. ALL BOLTS AND WASHERS SHALL BE GALVANIZED OR STAINLESS STEEL WITH A MINIMUM TENSILE STRENGTH OF 60 KSI OR APPROVED COATED HARDWARE.
13. TOP & BOTTOM DETAILS SHOWN MAY BE INTERCHANGED AS FIELD CONDITIONS DICTATE. PANELS MAY BE MOUNTED HORIZONTALLY WHERE APPLICABLE, EXCEPT FOR "h" AND "U" HEADER MOUNTING CONDITIONS.

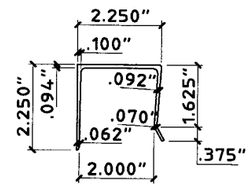

6 "U" HEADER
SCALE: 3" = 1' - 0"

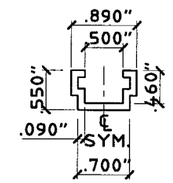

7 C-TRACK
SCALE : HALF SIZE

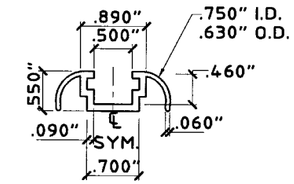

8 C-TRACK (FINISH)
SCALE : HALF SIZE

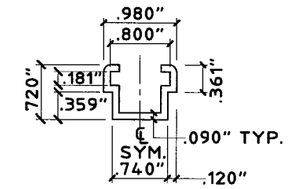

9 SLIDE C-TRACK
SCALE : HALF SIZE

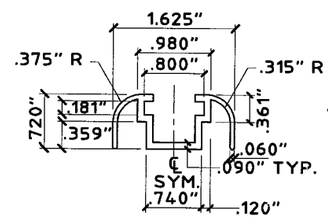

10 SLIDE C-TRACK (FINISH)
SCALE : HALF SIZE

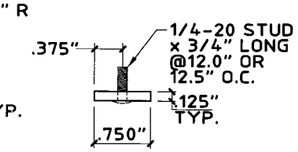

11 STUDDED STRAP (SLIDER)
SCALE : HALF SIZE

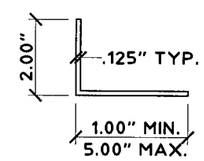

12 ANGLE
SCALE: 3" = 1' - 0"

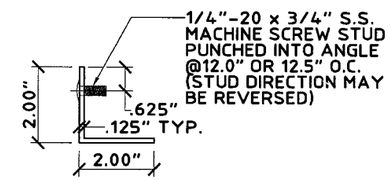

13 STUD ANGLE
SCALE: 3" = 1' - 0"

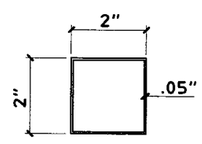

14 2" x 2" x 0.05" TUBE
SCALE : HALF SIZE

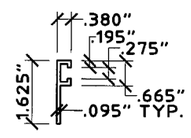

15 F-TRACK
SCALE: 3" = 1' - 0"

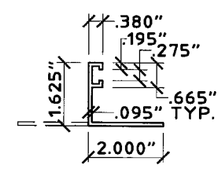

16 E-TRACK
SCALE: 3" = 1' - 0"

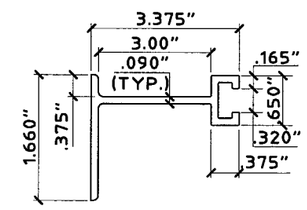

17 BUILD-OUT F-TRACK
SCALE : HALF SIZE

PRODUCT REVISED
as complying with the Florida Building Code
Acceptance No 06-0410.01
Expiration Date 08/30/2007
By Helena A. Melo
Miami Dade Product Control Division

Thornton-Tomasetti Group
330 N. Andrews Ave., Suite 450 • Ft. Lauderdale, FL 33301
Tel. (954) 522-3690 • Fax (954) 522-3691 • COA # 7519
Website: www.TheTTGroup.com

Copyright © 2006 Thornton-Tomasetti Group, Inc.

THE 24 STEEL STORM PANEL SHUTTER

Manufacturers of Hurricane & Security Protection Products
6865 N.W. 36th Avenue
Miami, Florida 33147
Phone: (305) 635-0900
Toll Free: (800) 327-0905
Fax: (305) 634-9078
HURST AWNING COMPANY, INC.
"QUALITY SERVICE SINCE 1957"

J.W. Knezevich
Professional Engineer
FL License No.: PE 0011961

APR 04 2006

revisions

no	date	by	description
0	04/04/2006	JWK	PREVIOUSLY DRAWING NO. 02-267

date 04/04/2006
scale AS NOTED
drawn by MCR
design by JWK
checked by JWK
drawing no. 06-343
sheet 1 of 6

Print Information: P:\FL1\Projects\KK6343.00\Drawings\R0-sub\06-343-01.dwg MCantu 04/04/2006 11:30:49am 04/04/06 11:29

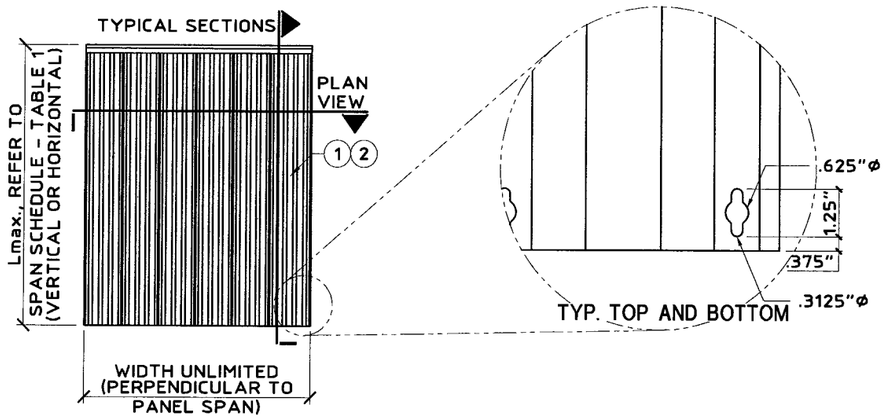

A PANEL ELEVATION
SCALE: 1/4" = 1' - 0"

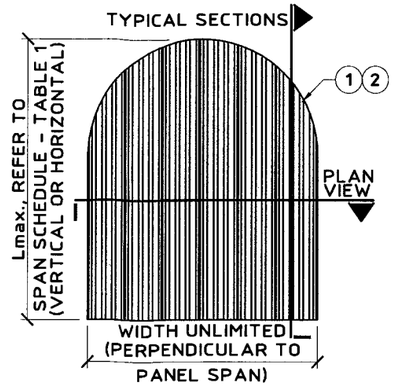

NOTE: FOR DIRECT MOUNT APPLICATION ONLY.

B ROUND PANEL ELEVATION
SCALE: 1/4" = 1' - 0"

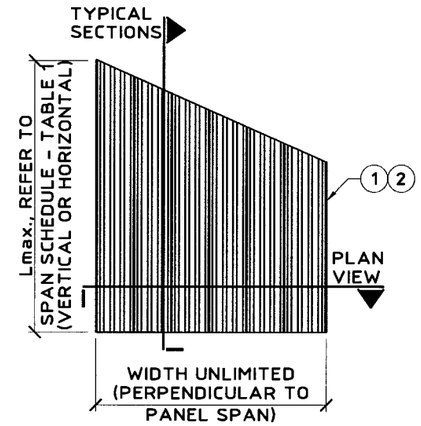

C MITER PANEL ELEVATION
SCALE: 1/4" = 1' - 0"

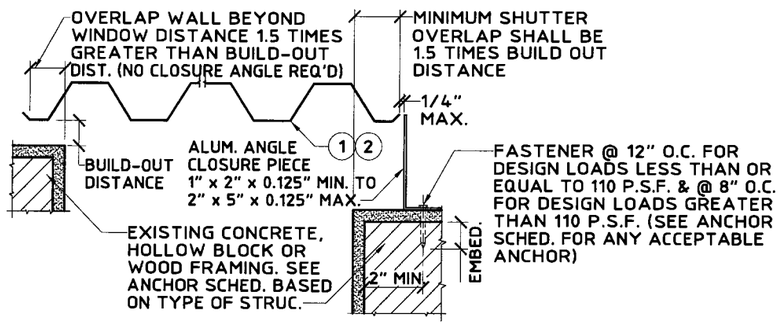

D BUILD-OUT MOUNT CLOSURE DETAIL
SCALE: 1-1/2" = 1' - 0"

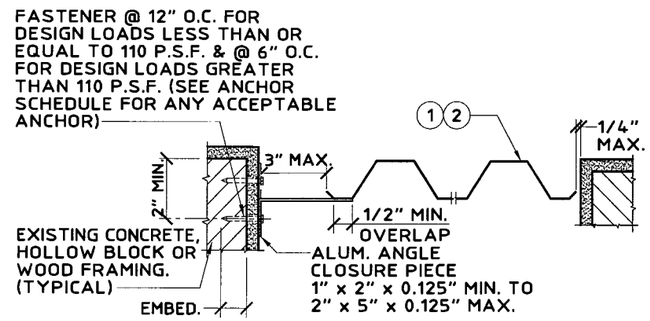

E TRAP MOUNT CLOSURE DETAIL
SCALE: 1-1/2" = 1' - 0"

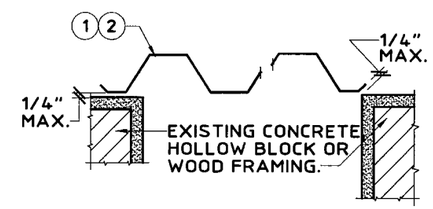

F WALL MOUNT CLOSURE DETAIL
SCALE: 1-1/2" = 1' - 0"

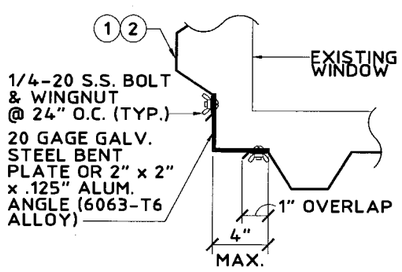

G CORNER CLOSURE DETAIL
SCALE: 1-1/2" = 1' - 0"

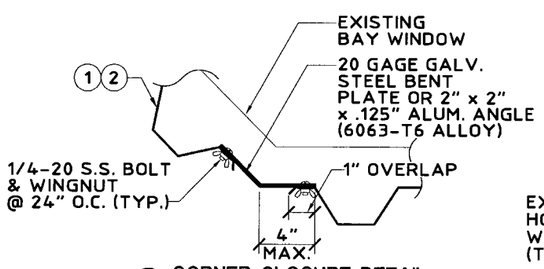

H CORNER CLOSURE DETAIL
SCALE: 1-1/2" = 1' - 0"

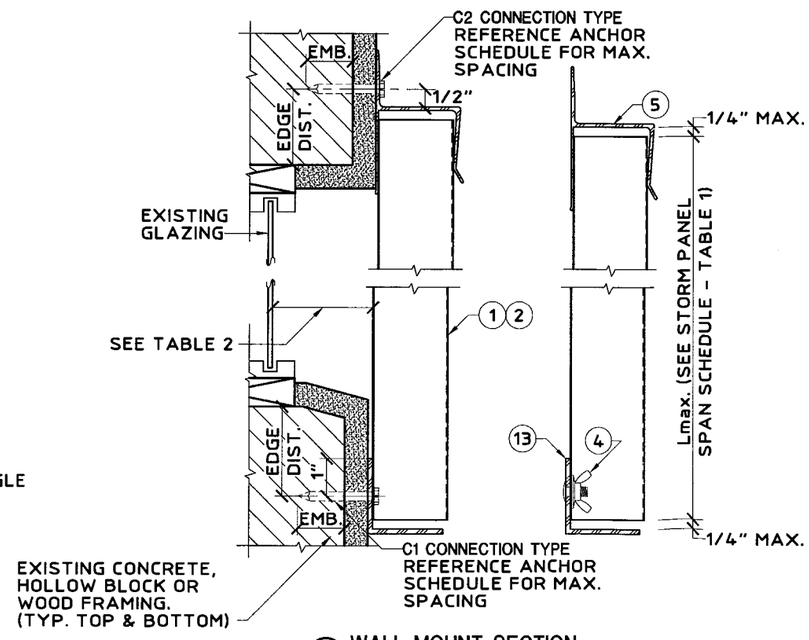

J WALL MOUNT SECTION
SCALE: 3" = 1' - 0"

PRODUCT REVISED
as complying with the Florida Building Code
Acceptance No. 06-0410.01
Expiration Date 08/30/2007
By Helena A Melo
Miami Dade Product Control Division

Thornton-Tomasetti Group
330 N. Andrews Ave., Suite 450 • Ft. Lauderdale, FL 33301
Tel. (954) 522-3690 • Fax (954) 522-3691 • COA # 7519
Website: www.TheTTGroup.com

Copyright © 2006 Thornton-Tomasetti Group, Inc.

THE 24 STEEL STORM PANEL SHUTTER

Manufacturers of Hurricane & Security Protection Products
HURST AWNING COMPANY, INC. "QUALITY SERVICE SINCE 1957"
6865 N.W. 36th Avenue
Miami, Florida 33147
Phone: (305) 635-0900
Toll Free: (800) 327-0905
Fax: (305) 634-9078

J.W. Knezevich
Professional Engineer
FL License No.: PE 0041961

APR 04 2006

revisions

no	date	by	description
0	04/04/2006	JWK	PREVIOUSLY DRAWING NO. 02-2-07

date 04/04/2006
scale AS NOTED
drawn by MCR
design by JWK
checked by JWK
drawing no. 06-343
sheet 2 of 6

Print Information: P:\FL1\Projects\KK6343.00\Drawings\R0-sub\06-343-02.dwg MCantu 04/04/2006 11:30:54am 04/04/06 11:29

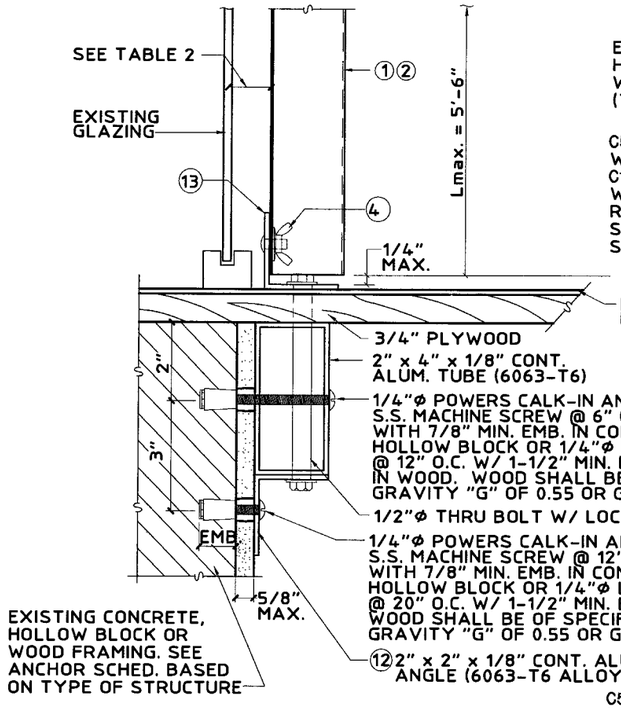

(MAX. DESIGN LOAD ± 73 PSF)

K "PASS THRU" DETAIL
SCALE: 3" = 1' - 0"

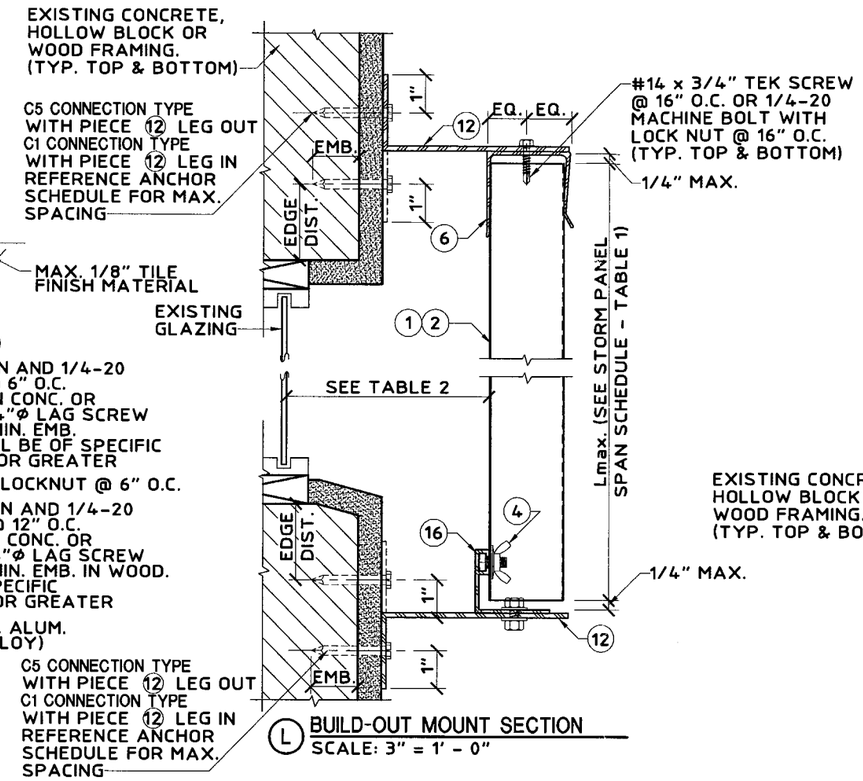

L BUILD-OUT MOUNT SECTION
SCALE: 3" = 1' - 0"

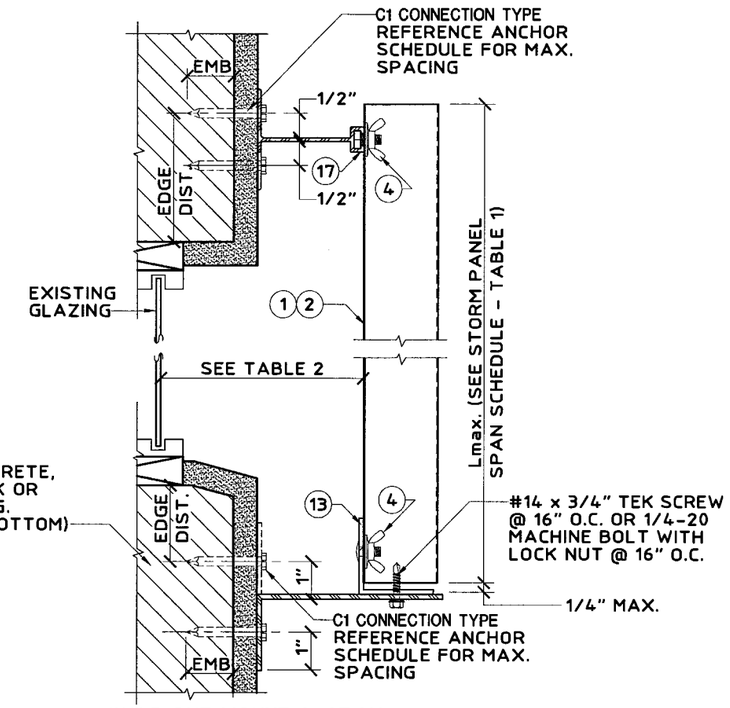

M BUILD-OUT MOUNT SECTION
SCALE: 3" = 1' - 0"

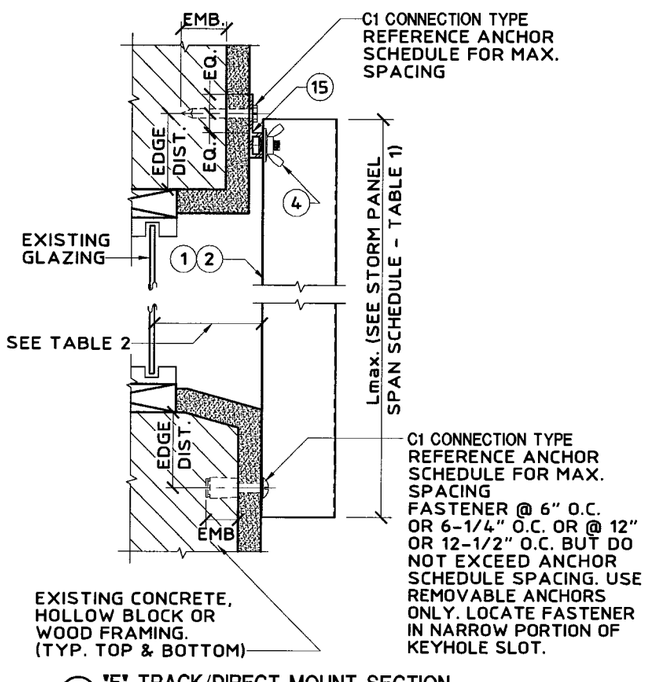

N "F" TRACK/DIRECT MOUNT SECTION
SCALE: 3" = 1' - 0"

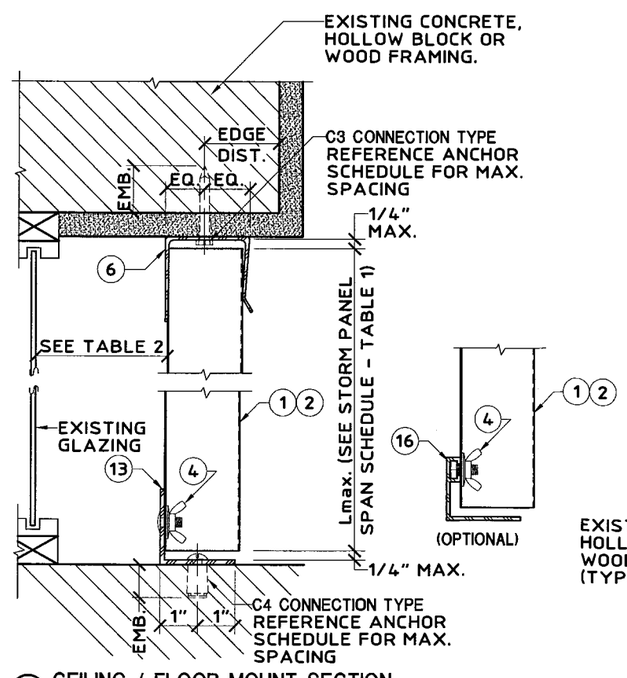

P CEILING / FLOOR MOUNT SECTION
SCALE: 3" = 1' - 0"

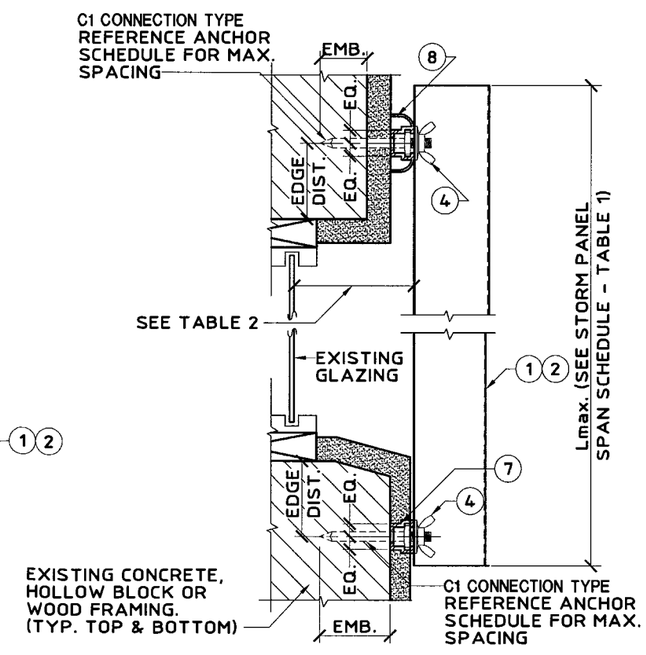

Q FINISH TRACK / PRE-STUCCO TRACK
SCALE: 3" = 1' - 0"

PRODUCT REVISED
as complying with the Florida Building Code
Acceptance No 06-0410.01
Expiration Date 08/30/2007
By Helena A. Molina
Miami Dade Product Control Division

Thornton-Tomasetti Group
330 N. Andrews Ave., Suite 450 • Ft. Lauderdale, FL 33301
Tel. (954) 522-3690 • Fax (954) 522-3691 • COA # 7519
Website: www.TheTTGroup.com

Copyright © 2006 Thornton-Tomasetti Group, Inc.

THE 24 STEEL STORM PANEL SHUTTER

Manufacturers of Hurricane & Security Protection Products
6865 N.W. 36th Avenue
Miami, Florida 33147
Phone: (305) 635-0900
Toll Free: (800) 327-0905
Fax: (305) 634-9078
HURST AWNING COMPANY, INC. "QUALITY SERVICE SINCE 1957"

J.W. Kriezevich
Professional Engineer
FL License No.: PE 0041961

APR 04 2006

revisions

no	date	by	description
0	04/04/2006	JWK	PREVIOUSLY DRAWING NO. 02-767

date 04/04/2006
scale AS NOTED
drawn by MCR
design by JWK
checked by JWK
drawing no. 06-343
sheet 3 of 6

Print Information: P:\FL1\Projects\KK6343.00\Drawings\R0-sub\06-343-03.dwg MCantu 04/04/2006 11:30:59am 04/04/06 11:29

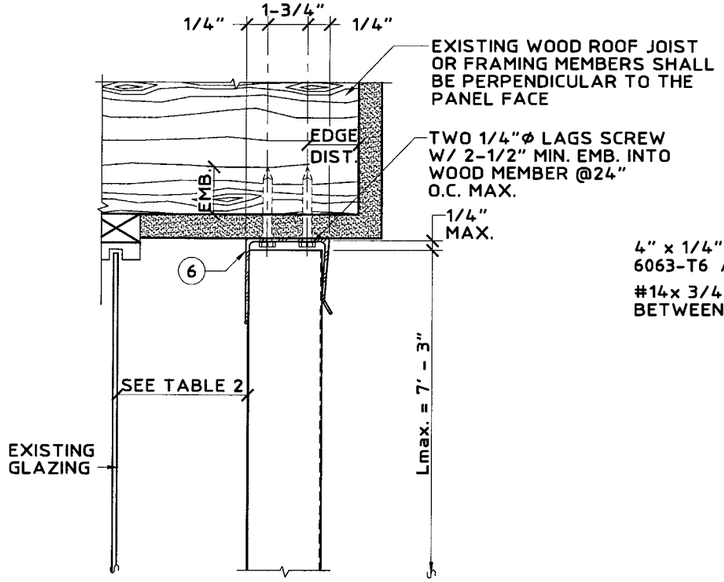

MAX. DESIGN LOAD = ± 47.9 P.S.F.

(R) CEILING MOUNT SECTION
SCALE: 3" = 1' - 0"

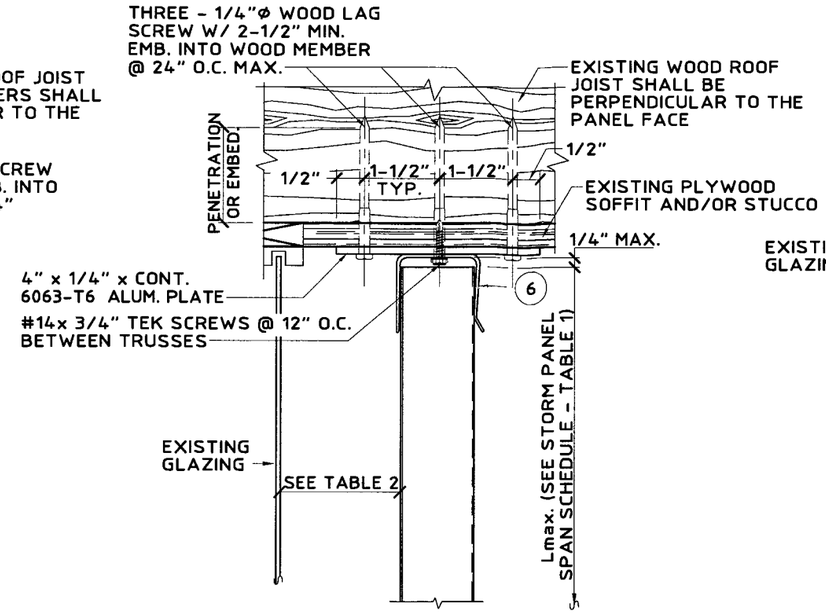

(S) CEILING/FLOOR MOUNT SECTION
SCALE : 3" = 1'-0"

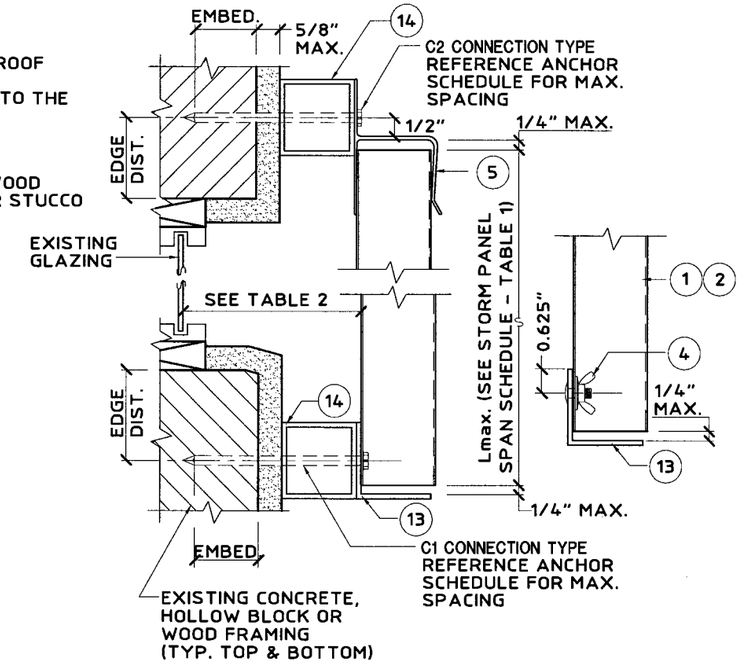

(U) WALL MOUNT SECTION
SCALE : 3" = 1'-0"

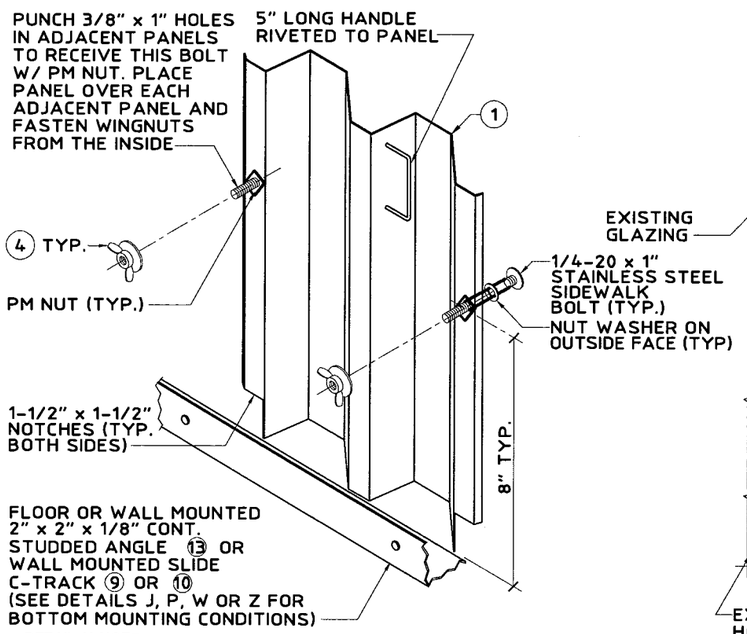

DETAIL V NOTE:

THIS DETAIL DEPICTS THE CONNECTION OF THE LAST PANEL FOR AN OPENING WITH PANELS INSTALLED FROM INSIDE. REFERENCE DETAILS J, P, R OR S FOR TOP MOUNTING CONDITIONS.

MAX. PANEL HEIGHT = 8' - 8'
AND MAX. DESIGN LOAD = ±72.00 P.S.F.

(V) OPTIONAL INTERIOR FASTENING DETAIL (ISOMETRIC)
N.T.S.

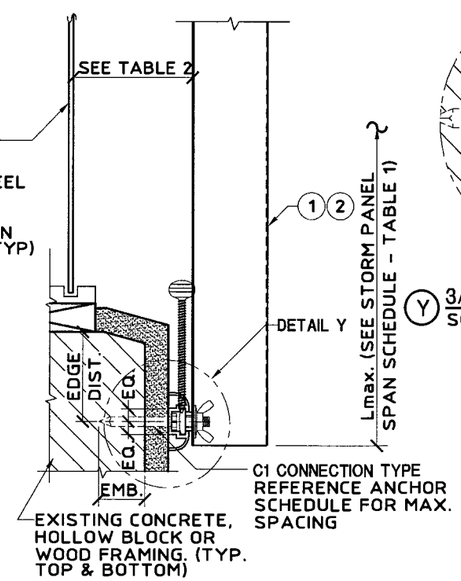

NOTE: USE OF DETAIL SHALL BE IN CONJUNCTION WITH AN ' h ' HEADER OR ' U ' HEADER TOP MOUNT

(W) SLIDE TRACK ASSEMBLY - INSIDE MOUNT
SCALE: 3" = 1' - 0"

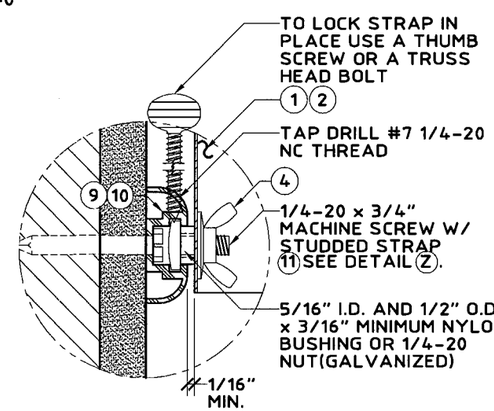

(Y) 3/4" SLIDE TRACK ASSEMBLY (BLOW UP)
SCALE: HALF SCALE

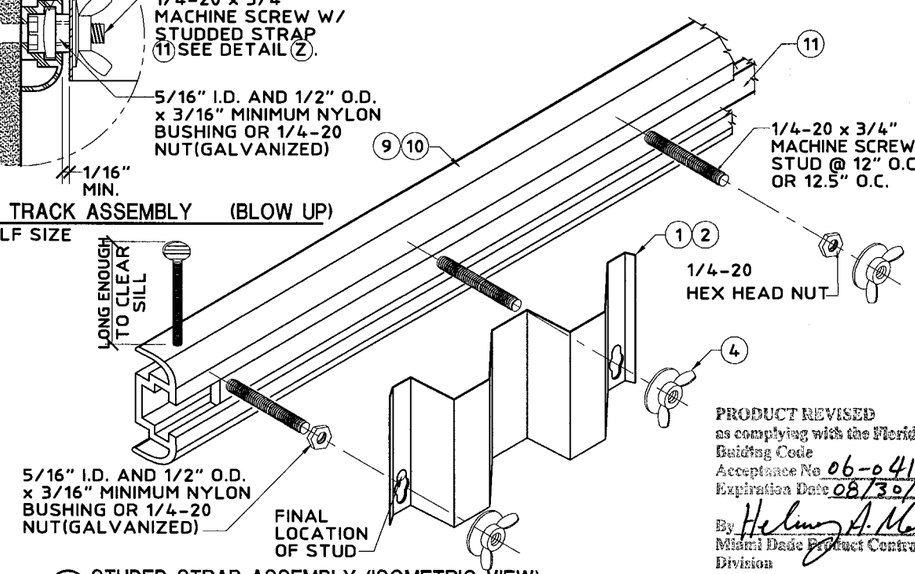

(Z) STUDED STRAP ASSEMBLY (ISOMETRIC VIEW)
SCALE: 3" = 1' - 0"

PRODUCT REVISED
as complying with the Florida Building Code
Acceptance No. 06-0410.01
Expiration Date 08/30/2007
By Helmy A. Mohr
Miami Dade Product Control Division

Thornton-Tomasetti Group
330 N. Andrews Ave., Suite 450 • Ft. Lauderdale, FL 33301
Tel. (954) 522-3690 • Fax (954) 522-3691 • COA # 7519
Website: www.TheTTGroup.com

Copyright © 2006 Thornton-Tomasetti Group, Inc.

THE 24 STEEL STORM PANEL SHUTTER

Manufacturers of Hurricane & Security Protection Products
HURST AWNING COMPANY, INC. "QUALITY SERVICE SINCE 1957"
6865 N.W. 36th Avenue
Miami, Florida 33147
Phone: (305) 635-0900
Toll Free: (800) 327-0905
Fax: (305) 634-9078

J.W. Knezevich
Professional Engineer
FL License No.: PE 0041961

APR 04 2006

revisions

no	date	by	description
0	R4/04/2006	JWK	PREVIOUSLY DRAWING NO. 02-267

date	04/04/2006
scale AS NOTED	drawn by MCR
design by JWK	checked by JWK
drawing no. 06-343	
sheet 4 of 6	

Print Information: P:\FL1\Projects\KK6343.00\Drawings\RO-sub\06-343-04.dwg MCantu 04/04/2006 11:31:04am 04/04/06 11:29

ANCHOR SCHEDULE

FASTENER MAXIMUM SPACING (INCHES) REQUIRED FOR VARIOUS DESIGN LOADS AND SPANS

EXIST. STRUC.	ANCHOR TYPE	LOAD (W) P.S.F. MAX. (SEE NOTE 1)	MIN. 2" EDGE DISTANCE										MIN. 3" EDGE DISTANCE									
			SPANS UP TO 5'-0" (SEE NOTE 1)					SPANS UP TO 8'-7" (SEE NOTE 1)					SPANS UP TO 12'-0" (SEE NOTE 1)					SPANS UP TO 5'-0" (SEE NOTE 1)					SPANS UP TO 8'-7" (SEE NOTE 1)					SPANS UP TO 12'-0" (SEE NOTE 1)				
			CONNECTION TYPE (SEE NOTE 3)					CONNECTION TYPE (SEE NOTE 3)					CONNECTION TYPE (SEE NOTE 3)					CONNECTION TYPE (SEE NOTE 3)					CONNECTION TYPE (SEE NOTE 3)					CONNECTION TYPE (SEE NOTE 3)				
			C1	C2	C3	C4	C5	C1	C2	C3	C4	C5	C1	C2	C3	C4	C5	C1	C2	C3	C4	C5	C1	C2	C3	C4	C5	C1	C2	C3	C4	C5
CONCRETE	1/4"Φ ITW BUILDEX TAPCON W/ 1-3/4" MIN. EMBEDMENT (MIN. 3,145 P.S.I. CONCRETE)	35.3	16	16	16	16	16	16	16	13	11	16	16	16	10	8	16	16	16	16	16	16	16	16	16	14	16	16	16	12	10	16
		47.2	16	16	16	14	16	16	16	10	8	16	16	12	7	6	16	16	16	16	16	16	16	16	13	10	16	16	13	9	7	16
		62.2	16	16	13	11	16	16	14	7	6.25	16	15	8	6.25	5	15	16	16	16	14	16	16	16	10	8	16	16	10	8	6.25	16
		72.0	16	16	11	9	16	15	9	6.25	5	15	15	8	6.25	5	15	16	16	15	12	16	16	10	8	7	16	16	10	8	6.25	16
		122.0	16	9	6.25	5	16	15	8	6.25	5	15	15	8	6.25	5	15	16	10	8	7	16	16	10	8	6.25	16	16	10	8	6.25	16
	1/4" ELCO MAXISET TAPCON W/ 1-3/4" MIN. EMBEDMENT (MIN. 3,320 P.S.I. CONCRETE)	35.3	16	16	16	16	16	16	16	16	12	16	16	16	11	9	16	16	16	16	16	16	16	16	16	15	16	16	16	14	11	16
		47.2	16	16	16	16	16	16	16	11	9	16	16	11	8	6.25	16	16	16	16	16	16	16	16	14	11	16	16	14	10	8	16
		62.2	16	16	15	12	16	16	13	9	7	16	14	8	7	6	14	16	16	16	15	16	16	16	11	8	16	16	10	9	7	16
		72.0	16	16	13	10	16	14	8	7	6	14	14	8	7	6	14	16	16	16	13	16	16	10	9	7	16	16	10	9	7	16
		122.0	15	9	8	6.25	15	14	8	7	6	14	14	8	7	6	14	16	11	10	7	16	16	10	9	7	16	16	10	9	7	16
	* * 1/4"Φ ELCO MALE/ FEMALE "PANELMATE" W/ 1-3/4 MIN. EMBEDMENT & 1/4-20 MACHINE SCREW WITH NUT (MIN. 3,000 P.S.I. CONCRETE)	35.3	16	16	16	16	16	16	16	15	12	16	16	16	11	9	16	16	16	16	16	16	16	16	16	15	16	16	16	13	11	16
		47.2	16	16	16	16	16	16	16	11	9	16	16	12	8	6.25	16	16	16	16	16	16	16	16	14	11	16	16	15	10	8	16
		62.2	16	16	15	12	16	16	15	8	7	16	16	9	7	6	16	16	16	16	15	16	16	16	10	8	16	16	11	9	7	16
		72.0	16	16	12	10	16	16	9	7	6	16	16	9	7	6	16	16	16	16	13	16	16	12	9	7	16	16	11	9	7	16
		122.0	16	10	7	6.25	16	16	9	7	6	16	16	9	7	6	16	16	12	9	7	16	16	11	9	7	16	16	11	9	7	16
	* 1/4"Φ POWERS CALK-IN W/ 7/8" EMBEDMENT & 1/4-20 STAINLESS STEEL MACHINE SCREW (MIN. 3,000 P.S.I. CONCRETE)	35.3	16	16	16	16	16	16	16	11	10	16	16	16	8	7	16	16	16	16	16	16	16	16	16	16	16	16	16	14	11	16
		47.2	16	16	15	13	16	16	16	8	7	16	16	12	6.25	5	16	16	16	16	16	16	16	16	14	12	16	16	15	10	8	16
		62.2	16	16	11	9	16	16	14	6.25	5	16	16	9	5	4	15	16	16	16	15	16	16	16	11	9	16	16	11	9	7	16
		72.0	16	16	10	8	16	16	9	5	4	16	16	9	5	4	15	16	16	16	13	16	16	11	9	7	16	16	11	9	7	16
		122.0	16	9	5	5	16	16	9	5	4	15	16	9	5	4	15	16	12	10	8	16	16	11	9	7	16	16	11	9	7	16
	1/4"Φ ELCO CRETE FLEX W/ 1-3/4" MIN. EMBEDMENT (MIN. 3,350 P.S.I. CONCRETE)	35.3	16	16	16	16	16	16	16	16	16	16	16	16	15	12	16	16	16	16	16	16	16	16	16	16	16	16	16	16	15	16
		47.2	16	16	16	16	16	16	16	16	12	16	16	15	11	9	16	16	16	16	16	16	16	16	16	15	16	16	16	14	11	16
		62.2	16	16	16	16	16	16	16	12	9	16	16	11	10	8	16	16	16	16	16	16	16	16	15	11	16	16	13	12	10	16
		72.0	16	16	16	14	16	16	11	10	8	16	16	11	10	8	16	16	16	16	16	16	16	13	13	10	16	16	13	12	10	16
		122.0	16	12	10	8	16	16	11	10	8	16	16	11	10	8	16	16	14	13	10	16	16	13	12	10	16	16	13	12	10	16

ANCHOR SCHEDULE

FASTENER MAXIMUM SPACING (INCHES) REQUIRED FOR VARIOUS DESIGN LOADS AND SPANS

EXIST. STRUC.	ANCHOR TYPE	LOAD (W) P.S.F. MAX. (SEE NOTE 1)	MIN. 3/4" EDGE DISTANCE														
			SPANS UP TO 5'-0" (SEE NOTE 1)					SPANS UP TO 8'-7" (SEE NOTE 1)					SPANS UP TO 12'-0" (SEE NOTE 1)				
			CONNECTION TYPE (SEE NOTE 3)					CONNECTION TYPE (SEE NOTE 3)					CONNECTION TYPE (SEE NOTE 3)				
			C1	C2	C3	C4	C5	C1	C2	C3	C4	C5	C1	C2	C3	C4	C5
WOOD	1/4"Φ x MIN. 1-3/4" LONG LAG SCREW W/ MIN. 1-3/4" EMBEDMENT SHEAR PARALLEL OR PERPENDICULAR TO WOOD GRAIN	35.3	16	16	16	16	16	16	16	12	11	16	16	16	9	8	16
		47.2	16	16	16	14	16	16	16	9	8	16	16	16	6.25	6	16
		62.2	16	16	12	11	16	16	16	7	6.25	16	16	14	6	5	16
		72.0	16	16	10	9	16	16	14	6	5	16	16	14	6	5	16
		122.0	16	15	6.25	5	16	16	14	6	5	16	16	14	6	5	16
	* * 1/4"Φ ELCO MALE/ FEMALE "PANELMATE" W/ 1-7/8 MIN. EMBEDMENT & 1/4-20 MACHINE SCREW WITH NUT	35.3	16	16	16	16	16	16	16	16	14	16	16	16	11	10	16
		47.2	16	16	16	16	16	16	16	12	10	16	16	16	8	7	16
		62.2	16	16	16	13	16	16	16	9	8	16	16	14	7	6.25	16
		72.0	16	16	13	11	16	16	14	8	6.25	16	16	14	7	6.25	16
		122.0	16	15	8	7	16	16	14	7	6.25	16	16	14	7	6.25	16

ANCHOR NOTES:

1. SPANS AND DESIGN LOADS SHOWN HERE ARE FOR DETERMINING ANCHOR SPACING ONLY. ALLOWABLE STORM PANEL SPANS FOR SPECIFIC LOADS MUST BE LIMITED TO THOSE SHOWN IN TABLE 1.
2. ENTER ANCHOR SCHEDULE BASED ON THE EXISTING STRUCTURE MATERIAL, ANCHOR TYPE AND EDGE DISTANCE. SELECT DESIGN LOAD GREATER THAN OR EQUAL TO NEGATIVE DESIGN LOAD ON SHUTTER AND SELECT SPAN GREATER THAN OR EQUAL TO SHUTTER SPAN.
3. SEE MOUNTING SECTION DETAILS FOR IDENTIFICATION OF CONNECTION TYPE.
4. EXISTING STRUCTURE MAY BE CONCRETE, HOLLOW BLOCK OR WOOD FRAMING. REFERENCE ANCHOR SCHEDULE FOR PROPER ANCHOR TYPE BASED ON TYPE OF EXISTING STRUCTURE.
5. ANCHOR SHALL BE INSTALLED IN ACCORDANCE WITH MANUFACTURER'S RECOMMENDATIONS. MINIMUM EMBEDMENT LENGTHS AND EDGE DISTANCES SHALL BE AS NOTED AND SHALL NOT INCLUDE STUCCO OR OTHER WALL FINISHES. MINIMUM EMBEDMENT DEPTH FOR LAG SCREWS SHALL ONLY INCLUDE THE THREADED PORTION.
6. WHERE EXISTING STRUCTURE IS WOOD FRAMING, WOOD FRAMING CONDITIONS VARY. FIELD VERIFY THAT FASTENERS ARE INTO ADEQUATE WOOD FRAMING MEMBERS, NOT PLYWOOD. FASTENING TO PLYWOOD IS ACCEPTABLE ONLY FOR SIDE CLOSURE PIECES.
7. WHERE LAG SCREWS FASTEN TO NARROW FACE OF STUD FRAMING, FASTENER SHALL BE LOCATED IN CENTER OF NOMINAL 2" x 4" (MIN.) WOOD STUD. 3/4" EDGE DISTANCE IS ACCEPTABLE FOR WOOD FRAMING. WOOD STUD SHALL BE "SOUTHERN PINE" G=0.55 OR GREATER DENSITY. LAG SCREWS SHALL HAVE PHILLIPS PAN HEAD OR HEX HEAD.
8. MACHINE SCREWS SHALL HAVE MINIMUM OF 1/2" ENGAGEMENT OF THREADS IN BASE ANCHOR AND MAY HAVE EITHER A PAN HEAD, TRUSS HEAD, OR WAFER HEAD (SIDEWALK BOLT) AND WITH OPTIONAL KEYHOLE WASHER FOR DIRECT MOUNT CONDITIONS, U.O.N.
9. DESIGNATES ANCHOR CONDITIONS WHICH ARE NOT ACCEPTABLE USES.

*10. DESIGNATES ANCHORS WHICH ARE REMOVABLE BY REMOVING MACHINE SCREW, NUT OR WASHERED WINGNUT. REMOVABLE ANCHORS ARE REQUIRED FOR DIRECT MOUNT @ 6", 6-1/4", 12" OR 12-1/2" O.C. MAX. SPACING ONLY. SPACINGS SHALL NOT EXCEED VALUE SPECIFIED IN ANCHOR SCHEDULE. LOCATE FASTENER IN NARROW PORTION OF KEYHOLE SLOT.

PRODUCT REVISED
as complying with the Florida
Building Code
Acceptance No. 06-0410.01
Expiration Date 08/30/2007
By Helmy A. Mola
Miami Dade Product Control
Division

Thornton-Tomasetti Group
330 N. Andrews Ave., Suite 450 • Ft. Lauderdale, FL 33301
Tel. (954) 522-3690 • Fax (954) 522-3691 • COA # 7519
Website: www.TheTTGroup.com

Copyright © 2006 Thornton-Tomasetti Group, Inc.

THE 24 STEEL STORM PANEL SHUTTER

Manufacturers of Hurricane & Security Protection Products
6865 N.W. 36th Avenue
Miami, Florida 33147
Phone: (305) 635-0900
Toll Free: (800) 327-0905
Fax: (305) 634-9078
HURST AWNING COMPANY, INC. "QUALITY SERVICE SINCE 1957"

J.W. Knezevich
Professional Engineer
FL License No.: PE 0041961

APR 04 2006

revisions

no	date	by	description
0	04/04/2006	JWK	PREVIOUSLY DRAWING NO. 02-267

date 04/04/2006
scale AS NOTED
drawn by MCR
design by JWK
checked by JWK
drawing no. 06-343
sheet 5 of 6

Print Information: P:\FL1\Projects\KK6343.00\Drawings\R0-sub\06-343-05.dwg MCantu 04/04/2006 11:31:09am 04/04/06 11:29

ANCHOR SCHEDULE

FASTENER MAXIMUM SPACING (INCHES) REQUIRED FOR VARIOUS DESIGN LOADS AND SPANS

EXIST. STRUC.	ANCHOR TYPE	LOAD (W) P.S.F. MAX. (SEE NOTE 1)	MIN. 2" EDGE DISTANCE															MIN. 3" EDGE DISTANCE													
			SPANS UP TO 5'-0" (SEE NOTE 1)					SPANS UP TO 8'-7" (SEE NOTE 1)					SPANS UP TO 12'-0" (SEE NOTE 1)					SPANS UP TO 5'-0" (SEE NOTE 1)					SPANS UP TO 8'-7" (SEE NOTE 1)					SPANS UP TO 12'-0" (SEE NOTE 1)				
			CONNECTION TYPE (SEE NOTE 3)					CONNECTION TYPE (SEE NOTE 3)					CONNECTION TYPE (SEE NOTE 3)					CONNECTION TYPE (SEE NOTE 3)					CONNECTION TYPE (SEE NOTE 3)					CONNECTION TYPE (SEE NOTE 3)				
			C1	C2	C3	C4	C5	C1	C2	C3	C4	C5	C1	C2	C3	C4	C5	C1	C2	C3	C4	C5	C1	C2	C3	C4	C5	C1	C2	C3	C4	C5
HOLLOW CONCRETE BLOCK	1/4"Ø ITW BUILDEX W/ 1-1/4" MIN. EMBEDMENT MIN. EMBEDMENT	35.3	16	16	11	8	16	10	10	6.25	5	10	7	7	4	3	7	16	16	14	10	16	12	12	8	6	12	8	8	5	4	8
		47.2	13	13	8	6.25	13	8	8	5	3	8	5	4	3		5	15	15	10	7	15	9	9	6	4	9	6.25	4	4	3	6.25
		62.2	10	10	6.25	5	10	6	4	3		6	5		3		5	11	11	8	6	11	6.25	5	4	3	6.25	5	3	4		5
		72.0	9	9	5	4	9	5	3	3		5	5		3		5	10	10	7	5	10	5	3	4	3	5	5	3	4		5
		122.0	5	3	3		5	5		3		5	5		3		5	6	3	4	3	6	5	3	4		5	5	3	4		5
	1/4" ELCO MAXISET TAPCON W/ 1-1/4" MIN. EMBEDMENT	35.3	16	16	16	12	16	13	13	9	7	13	9	9	6.25	5	9	16	16	16	15	16	16	16	12	8	16	12	12	8	6.25	12
		47.2	16	16	12	9	16	10	10	7	5	10	7	5	5	3	7	16	16	15	11	16	12	12	8	6.25	12	9	6.25	6.25	4	9
		62.2	13	13	9	7	13	7	6	5	4	7	6.25	3	4	3	6.25	16	16	11	8	16	9	7	6.25	5	9	8	4	5	4	8
		72.0	11	11	8	6	11	6.25	3	4	3	6.25	6.25	3	4	3	6.25	14	14	10	7	14	8	4	5	4	8	8	4	5	4	8
		122.0	6.25	4	4	3	6.25	6.25	3	4	3	6.25	6.25	3	4	3	6.25	8	5	6	4	8	8	4	5	4	8	8	4	5	4	8
	* 1/4"Ø ELCO MALE/ FEMALE "PANELMATE" W/ 1-1/4 MIN. EMBEDMENT & 1/4-20 MACHINE SCREW WITH NUT	35.3	16	16	16	13	16	16	16	9	7	16	14	14	6.25	5	14	16	16	16	14	16	16	16	10	8	16	15	15	7	6	15
		47.2	16	16	12	9	16	15	15	7	5	15	11	7	5	4	11	16	16	14	11	16	16	16	8	6.25	16	11	8	5	4	11
		62.2	16	16	9	7	16	11	9	5	4	11	9	5	4	3	9	16	16	10	8	16	12	9	6	4	12	10	5	5	4	10
		72.0	16	16	7	6.25	16	10	5	4	3	10	9	5	4	3	9	16	16	9	7	16	10	6	5	4	10	10	5	5	4	10
		122.0	10	6	4	3	10	9	5	4	3	9	9	5	4	3	9	10	6.25	5	4	10	10	5	5	4	10	10	5	5	4	10
	* 1/4"Ø POWERS CALK-IN W/ 7/8" EMBEDMENT & 1/4-20 STAINLESS STEEL MACHINE SCREW	35.3	16	16	12	9	16	13	13	7	5	13	9	9	5	4	9	16	16	16	14	16	16	16	11	8	16	12	12	8	6	12
		47.2	16	16	9	7	16	10	10	5	4	10	7	5	3	3	7	16	16	14	11	16	12	12	8	6.25	12	9	6.25	6	4	9
		62.2	13	13	7	5	13	7	6	4	3	7	6.25	3	3		6.25	16	16	11	8	16	9	7	6.25	4	9	8	4	5	4	8
		72.0	11	11	6	4	11	6.25	3	3		6.25	6.25	3	3		6.25	14	14	9	7	14	8	4	5	4	8	8	4	5	4	8
		122.0	6.25	4	3		6.25	6.25	3	3		6.25	6.25	3	3		6.25	8	5	5	4	8	8	4	5	4	8	8	4	5	4	8
	1/4"Ø ELCO CRETE FLEX W/ 1-1/4" MIN. EMBEDMENT	35.3	16	16	16	16	16	16	16	12	10	16	16	16	9	7	16	16	16	16	16	16	16	16	13	10	16	16	16	9	7	16
		47.2	16	16	16	13	16	16	16	9	7	16	12	8	7	5	12	16	16	16	13	16	16	16	9	7	16	12	8	7	5	12
		62.2	16	16	12	9	16	12	10	7	5	12	11	6.25	6.25	4	11	16	16	13	10	16	13	10	7	5	13	11	6.25	6.25	5	11
		72.0	16	16	11	8	16	11	6.25	6.25	4	11	11	6.25	6.25	4	11	16	16	11	8	16	11	6.25	6.25	5	11	11	6.25	6.25	5	11
		122.0	11	6.25	6.25	5	11	11	6.25	6.25	4	11	11	6.25	6.25	4	11	12	7	6.25	5	12	11	6.25	6.25	5	11	11	6.25	6.25	5	11

SEE PAGE 4 FOR COMPLETE ANCHOR NOTES.

TABLE 1 NOTE:

1. ENTER TABLE 1 WITH NEGATIVE DESIGN LOAD TO DETERMINE MAX. PANEL LENGTH. POSITIVE LOADS LESS THAN OR EQUAL TO THE NEGATIVE LOAD ARE ACCEPTABLE. FOR DESIGN LOADS BETWEEN TABULATED VALUES. NEXT HIGHER LOAD OR LINEAR INTERPOLATION MAY BE USED TO DETERMINE ALLOWABLE SPANS.

TABLE 2 NOTE:

1. ENTER TABLE 2 WITH POSITIVE DESIGN LOAD TO DETERMINE MIN. STORM PANEL SEPARATION FROM GLASS.

PRODUCT REVISED
as complying with the Florida
Building Code
Acceptance No. 06-0410.01
Expiration Date 08/30/2007
By Helena A. Melo
Miami Dade Product Control
Division

TABLE 1 — MAX. ALLOWABLE STORM PANEL SPAN SCHEDULE

DESIGN LOAD (P.S.F.)	SPAN (FT - IN)
30.0	12 - 0
33.0	11 - 10
35.0	11 - 7
40.0	11 - 3
40.7	11 - 2
45.0	10 - 11
50.0	10 - 5
55.0	9 - 11
59.3	9 - 7
60.0	9 - 6
62.0	9 - 4
65.0	9 - 2
70.0	8 - 10
72.0	8 - 8
75.0	7 - 11
80.0	7 - 8
90.0	7 - 0
100.0	6 - 3
105.0	6 - 0
110.0	5 - 8
120.0	5 - 3
122.0	5 - 2

TABLE 2 — MINIMUM STORM PANEL SEPARATION FROM GLASS

POSITIVE DESIGN LOAD (W) (P.S.F.)	ACTUAL SPAN (L) (FT - IN)	COLUMN 1: MIN. SEP. FOR ALL INSTALLATIONS LESS THAN 30' ABOVE GRADE (INCHES)	COLUMN 2: MIN. SEP. FOR ALL INSTALLATIONS GREATER THAN 30' ABOVE GRADE (INCHES)
30.0	6'-0"	2-3/4	1-1/4
	8'-8"	2-3/4	1-5/8
	12'-0"	3-3/8	3
40.0	6'-0"	2-3/4	1-1/4
	8'-8"	2-3/4	1-3/4
	11'-3"	3-3/8	3
50.0	6'-0"	2-3/4	1-3/8
	8'-8"	2-3/4	2
	10'-4"	3-3/8	2-7/8
60.0	6'-0"	2-3/4	1-3/8
	8'-8"	2-3/4	2-1/8
	9'-6"	3-3/8	2-1/2
70.0	6'-0"	2-3/4	1-3/8
	8'-8"	2-3/4	2-1/4
	8'-10"	3-3/8	2-3/8
80.0	5'-0"	2-3/4	1-1/4
	6'-0"	2-3/4	1-1/2
	7'-8"	2-3/4	2

Thornton-Tomasetti Group
330 N. Andrews Ave., Suite 450 • Ft. Lauderdale, FL 33301
Tel. (954) 522-3690 • Fax (954) 522-3691 • COA # 7519
Website: www.TheTTGroup.com

Copyright © 2006 Thornton-Tomasetti Group, Inc.

'HE 24 STEEL STORM PANEL SHUTTER

Manufacturers of Hurricane & Security Protection Products
6865 N.W. 36th Avenue
Miami, Florida 33147
Phone: (305) 635-0900
Toll Free: (800) 327-0905
Fax: (305) 634-9078
HURST AWNING COMPANY, INC. "QUALITY SERVICE SINCE 1957"

J.W. Knezevich
Professional Engineer
FL License No.: PE 0047961

APR 04 2006

revisions			
no	date	by	description
0	04/04/2006	JWK	PREVIOUSLY DRAWING NO. 02-267

date 04/04/2006
scale AS NOTED
drawn by MCR
design by JWK
checked by JWK
drawing no. 06-343
sheet 6 of 6

Print Information: P:\FL1\Projects\KK6343.00\Drawings\R0-sub\06-343-06.dwg MCantu 04/04/2006 11:31:14am 04/04/06 11:29