MIAMI-DADE COUNTY
BUILDING CODE COMPLIANCE OFFICE (BCCO)
PRODUCT CONTROL DIVISION

MIAMI-DADE COUNTY, FLORIDA
METRO-DADE FLAGLER BUILDING

140 WEST FLAGLER STREET, SUITE 1603
MIAMI, FLORIDA 33130-1563
(305) 375-2901 FAX (305) 375-2908
www.buildingcodeonline.com

NOTICE OF ACCEPTANCE (NOA)

Miami Dade Aluminum Supply, Inc.
1615 West 31st Place
Hialeah, Florida 33012

SCOPE:
This NOA is being issued under the applicable rules and regulations governing the use of construction materials. The documentation submitted has been reviewed by Miami-Dade County Product Control Division and accepted by the Board of Rules and Appeals (BORA) to be used in Miami Dade County and other areas where allowed by the Authority Having Jurisdiction (AHJ).

This NOA shall not be valid after the expiration date stated below. The Miami-Dade County Product Control Division (In Miami Dade County) and/or the AHJ (in areas other than Miami Dade County) reserve the right to have this product or material tested for quality assurance purposes. If this product or material fails to perform in the accepted manner, the manufacturer will incur the expense of such testing and the AHJ may immediately revoke, modify, or suspend the use of such product or material within their jurisdiction. BORA reserves the right to revoke this acceptance, if it is determined by Miami-Dade County Product Control Division that this product or material fails to meet the requirements of the applicable building code.

This product is approved as described herein, and has been designed to comply with the High Velocity Hurricane Zone of the Florida Building Code.

DESCRIPTION: **Aluminum Framed Screen Room**

APPROVAL DOCUMENT: Drawing titled " Screen Room ", prepared by Tilteco, Inc., sheets 1 through 4 of 4 and sheet 1A of 4, dated September 29, 2005, last revision #1 dated September 29, 2005, signed and sealed by Walter A. Tillit Jr., P.E. on November 30, 2005, bearing the Miami-Dade County Product Control Renewal stamp with the Notice of Acceptance number and expiration date by the Miami-Dade County Product Control Division.

MISSILE IMPACT RATING: **None**

LABELING: A permanent label with the manufacturer's name or logo, city, state and the following statement: "Miami-Dade County Product Control Approved", shall be attached to the bottom of each chair rail.

RENEWAL of this NOA shall be considered after a renewal application has been filed and there has been no change in the applicable building code negatively affecting the performance of this product.

TERMINATION of this NOA will occur after the expiration date or if there has been a revision or change in the materials, use, and/or manufacture of the product or process. Misuse of this NOA as an endorsement of any product, for sales, advertising or any other purposes shall automatically terminate this NOA. Failure to comply with any section of this NOA shall be cause for termination and removal of NOA.

ADVERTISEMENT: The NOA number preceded by the words Miami-Dade County, Florida, and followed by the expiration date may be displayed in advertising literature. If any portion of the NOA is displayed, then it shall be done in its entirety.

INSPECTION: A copy of this entire NOA shall be provided to the user by the manufacturer or its distributors and shall be available for inspection at the job site at the request of the Building Official.

This NOA **renews NOA # 05-1220.13** and consists of this page 1, evidence submitted pages E-1 and E-2 as well as approval document mentioned above.

The submitted documentation was reviewed by **Helmy A. Makar, P.E.**

PRODUCT CONTROL ACCEPTED

Helmy A. Makar
06/22/2006

NOA No 06-0410.07
Expiration Date: 04/16/2011
Approval Date: 06/22/2006

Miami Dade Aluminum Supply, Inc.

NOTICE OF ACCEPTANCE: EVIDENCE SUBMITTED

1. EVIDENCE SUBMITTED UNDER PREVIOUS APPROVA #97-0507.04

A. DRAWINGS

1. *Drawing No. 97-07 prepared by Tilteco, Inc., titled Screen Room; Miami Dade Aluminum Supply, dated 01/10/97, revision #1 dated 02/25/98, sheets 1 through 4 of 4, signed and sealed by Walter A. Tillit Jr., P.E.*

B. TESTS

1. *Test report on Uniform Static Air Pressure Test of the roof panels, prepared by Hurricane Engineering & Testing Inc., Report No. HETI-96-580, dated 11/05/96, signed and sealed by Hector M. Medina, P.E.*

C. CALCULATIONS

1. *Dade County Product Approval for Screen Room/Canopy, sheets 1 through 25 dated 12/14/96 prepared by Tilteco, Inc., signed and sealed by Walter A. Tillit Jr., P.E.*

D. MATERIAL CERTIFICATIONS

1. *Mill Certified Inspection Report, dated 04/25/97 by Jupiter Aluminum Corp., with chemical composition and mechanical properties.*
2. *Tensile Test Report No. HETI-97-T43, prepared by Hurricane Engineering & Testing Inc. dated 04/28/97, signed and sealed by Hector M. Medina, P.E.*

2. EVIDENCE SUBMITTED UNDER PREVIOUS APPROVAL #01-0410.01

A. DRAWINGS

1. *None.*

B. TESTS

1. *None.*

C. CALCULATIONS

1. *None.*

D. MATERIAL CERTIFICATIONS

1. *None.*

Helmy A. Makar

Helmy A. Makar, P. E.
Product Control Examiner
NOA No 06-0410.07
Expiration Date: 04/16/2011
Approval Date: 06/22/2006

3. EVIDENCE SUBMITTED UNDER PREVIOUS APPROVAL #05-1220.13

A. DRAWINGS

1. *Drawing titled " Screen Room ", prepared by Tilteco, Inc., sheets 1 through 4 of 4 and sheet 1A of 4, dated September 29, 2005, last revision #1 dated September 29, 2005, signed and sealed by Walter A. Tillit Jr., P.E. on November 30, 2005.*

B. TESTS

1. *None.*

C. CALCULATIONS

1. *Calculation prepared by Tilteco, Inc., dated November 30, 2005, 36 pages, signed and sealed by Walter A. Tillit Jr., P.E.*

D. QUALITY ASSURANCE

1. *By Miami-Dade County Building Code Compliance Office.*

E. MATERIAL CERTIFICATIONS

1. *None.*

4. NEW EVIDENCE SUBMITTED

A. DRAWINGS

1. *None.*

B. TESTS

1. *None.*

C. CALCULATIONS

1. *None.*

D. QUALITY ASSURANCE

1. *By Miami-Dade County Building Code Compliance Office.*

E. MATERIAL CERTIFICATIONS

1. *None.*

Helmy A. Makar

Helmy A. Makar, P. E.
Product Control Examiner
NOA No 06-0410.07
Expiration Date: 04/16/2011
Approval Date: 06/22/2006

GENERAL NOTES:

1. THIS SCREEN ROOM SHOWN ON THIS PRODUCT APPROVAL DOCUMENT (P.A.D.) HAS BEEN STRUCTURALLY DESIGNED IN ACCORDANCE WITH THE 2004 EDITION OF THE FLORIDA BUILDING CODE. DESIGN WIND LOADS AND LIVE LOADS HAVE BEEN DETERMINED AS PER SECTION 1620 AND 1616 RESPECTIVELY OF THE ABOVE MENTIONED CODE, FOR A BASIC WIND SPEED OF 146 m.p.h, EXPOSURE C AND IN ACCORDANCE WITH ASCE 7-98 STANDARD.
ROOF PANELS ADEQUACY FOR WIND RESISTANCE HAS BEEN VERIFIED IN ACCORDANCE WITH SECTION 1625 OF THE ABOVE MENTIONED CODE AS PER HETI LAB REPORT # HETI-96-580, PER MIAMI-DADE COUNTY TAS-202 PROTOCOL.

2. DEFLECTIONS FOR COLUMNS, BEAMS AND ROOF PANELS SHALL BE AS FOLLOWS:
- L/80 FOR ROOF PROJECTIONS FROM EXISTING STRUCTURE LESS THAN OR EQUAL TO 12 FEET WHEN USED FOR RESIDENTIAL OCCUPANCY.
- L/180 FOR ALL COMMERCIAL PROJECTS AND FOR RESIDENTIAL WHEN ROOF PROJECTION FROM EXISTING STRUCTURE IS GREATER THAN 12 FEET.

3. ALL EXTRUSIONS TO BE 6063-T6 ALUMINUM ALLOY UNLESS OTHERWISE NOTED.

4. THE THICKNESS OF ALL EXTRUSIONS SHALL BE AS SHOWN ON THIS DRAWING MINIMUM THICKNESS SHALL BE 0.055" WITH STANDARD TOLERANCES IN ACCORDANCE WITH THE "ALUMINUM STANDARDS AND DATA 2003 EDITION", ALUMINUM ASSOCIATION INCORPORATED, WASHINGTON, D.C.

5. ALUMINUM ROOF PANEL ALLOYS SHALL BE 3105-H154. SCREWS USED FOR ATTACHMENT OF ROOF PANELS TO SUPPORTING STRUCTURE SHALL BE SEALED WITH AN APPROVED SEALANT THROUGHOUT.

6. ALL SCREWS TO BE AISI 304 SERIES STAINLESS STEEL OR 306 SERIES WITH 50 ksi YIELD STRENGHT AND 90 ksi TENSILE STRENGHT OR CORROSION RESISTANT COATED CARBON STEEL AS PER DIN 50018.

7. ALL BOLTS TO BE ASTM 307 GALVANIZED OR AISI 304 SERIES STAINLESS STEEL WITH 35 ksi MINIMUN YIELD STRENGTH.

8. ALL CONCRETE SHALL DEVELOP 3000 p.s.i. COMPRESSIVE STRESS AT 28 DAYS. WELDED WIRE FABRIC SHALL COMPLY W/ ASTM A-185.

9. ALL REINFORCING STEEL SHALL BE ASTM A-615 GRADE 60 DESIGNATION BARS.

10. SCREEN USED ON WALLS SHALL BE 60 PERCENT MINIMUM OPEN.

11. ALUMINUM MEMBERS IN CONTACT WITH CONCRETE AND WOOD SHALL BE PROTECTED BY KOPPERS BITUMINOUS PAINT ACCORDING TO F.B.C. SECTION 3004.4. WHEN ALUMINUM IS IN CONTACT WITH PRESSURE TREATED WOOD, IT SHALL BE IN ACCORDANCE WITH THE F.B.C. SECTION 3004.4.

12. IT SHALL BE THE RESPONSIBILITY OF THE CONTRACTOR TO VERIFY THE SOUNDNESS OF THE STRUCTURE WHERE SCREEN ROOM IS TO BE ATTACHED TO INSURE PROPER ANCHORAGE.

13. MINIMUM SOIL BEARING CAPACITY TO BE 2000 p.s.f.

14. CONCRETE AND CONCRETE BLOCK ANCHORS SHALL BE TAPCON TYPE ANCHORS, AS MANUFACTURED BY I.T.W. BUILDEX OR ELCO TEXTRON INC., OR POWER BOLT ANCHORS, AS MANUFACTURED BY POWER FASTENING, INC.DIAMETERS AND LENGTHS SHALL BE AS SPECIFIED ON DRAWINGS. MINIMUM EMBEDMENT OF TAPCONS INTO CONCRETE BLOCK IS 1 1/4". MINIMUM PENETRATION INTO CONCRETE IS 1 3/4". MINIMUM EMBEDMENT OF POWER BOLTS INTO CONCRETE IS 3".
MINIMUM PENETRATION IS IN ADDITION TO ANY ADDED LENGTH REQUIRED TO PENETRATE EXISTING PRECAST STONE, PRECAST CONCRETE PANELS, PAVERS OR TILES THAT COULD BE COVERING THE CONCRETE OR CONCRETE BLOCK WALL OR FLOOR.

15. THIS STRUCTURE SHALL BE CONSTRUCTED ATTACHED TO A C.B.S. WITH MEAN ROOF HEIGHT EQUAL OR LESS THAN 20'-0". NOTIFY THIS ENGINEER IF THE ABOVE CONDITION IS NOT COMPLIED WITH. THIS STRUCTURE SHALL BE INSTALLED LESS THAN 15'-0" HIGH ABOVE GROUND LEVEL.

16. SEAL AND CAULK EVERY FASTENER USED TO CONNECT ROOF PANELS TO SUPPORTING FRAME AND AT JOINTS BETWEEN PANELS.

17. ELECTRIC SERVICE DROP CONDUCTORS OR ANY OVERHEAD WIRING SHALL NOT EXIST OR BE INSTALLED OVER ANY PART OF THIS STRUCTURE.

18. THIS ENGINEER IS NOT RESPONSIBLE FOR CONSTRUCTION SAFETY AT SITE WHICH IS THE CONTRACTOR'S RESPONSIBILITY.

19.(a) THIS PRODUCT APPROVAL DOCUMENT (P.A.D.) PREPARED BY THE ENGINEER IS GENERIC AND DOES NOT PROVIDE INFORMATION FOR A SITE SPECIFIC PROJECT; i.e. WHERE THE SITE CONDITIONS DEVIATE FROM THE P.A.D.

(b) CONTRACTOR TO BE RESPONSIBLE FOR THE SELECTION, PURCHASE AND INSTALLATION INCLUDING LIFE SAFETY OF THIS PRODUCT BASED ON THIS PRODUCT APPROVAL PROVIDED HE/SHE DOES NOT DEVIATE FROM THE CONDITIONS DETAILED ON THIS DOCUMENT.

(c)THIS PRODUCT APPROVAL DOCUMENT WILL BE CONSIDERED INVALID IF MODIFIED.

(d) SITE SPECIFIC PROJECTS SHALL BE PREPARED BY A FLORIDA REGISTERED ENGINEER OR ARCHITECT WHICH WILL BECOME THE PROFESSIONAL OF RECORD (P.O.R.) FOR THE PROJECT AND WHO WILL BE RESPONSIBLE FOR THE PROPER USE OF THE P.A.D. PROFESSIONAL OF RECORD, ACTING AS DELEGATED ENGINEER TO THE P.A.D. ENGINEER, SHALL SUBMIT TO THIS LATTER THE SITE SPECIFIC DRAWINGS FOR REVIEW.

(e) THIS P.A.D. SHALL BEAR THE DATE AND ORIGINAL SEAL AND SIGNATURE OF THE PROFESSIONAL ENGINEER THAT PREPARED IT.

20. ROOF PANEL MANUFACTURER'S LABEL SHALL BE PLACED ON THE EXPOSED SURFACE OF THE PANEL APPROXIMATELLY 4" FROM THE EDGE OF SUCH PANEL. LABEL SHALL BE AS FOLLOW:
MIAMI-DADE ALUMINUM SUPPLY, INC
HIALEAH, FLORIDA
MIAMI-DADE COUNTY PRODUCT APPROVED.

PRODUCT RENEWED
as complying with the Florida Building Code
Acceptance No. 06-0410.07
Expiration Date 04/16/2011
By Helmy A. Melen
Miami Dade Product Control Division

PRODUCT REVISED
as complying with the Florida Building Code
Acceptance No. 05-1220.13
Expiration Date 04/16/2006
By Helmy A. Melen
Miami Dade Product Control Division

11/30/05

F.B.C. (High Velocity Hurricane Zone)

TILTECO INC.
TILLIT TESTING & ENGINEERING COMPANY
6355 N.W. 36th. St., Ste. 305, MIAMI, Fl. 33166
Phone : (305)871-1530 , Fax : (305)871-1531
EB-0006719
WALTER A. TILLIT Jr., P. E.
FLORIDA Lic. 44167

SCREEN ROOM

MIAMI DADE ALUMINUM SUPPLY
1615 WEST 31st. PLACE
HIALEAH, FLORIDA 33012
PH.:(305)823-0099, FAX:(305)823-2782

REV. NO	DESCRIPTION	DATE	REV. No	DESCRIPTION	DATE
1	OLD 97-07	9/29/05	3		
2	-	-	4		

Drawn by: J.J.V.
9/29/05 DATE
05-312 DRAWING No
SHEET 1 OF 4

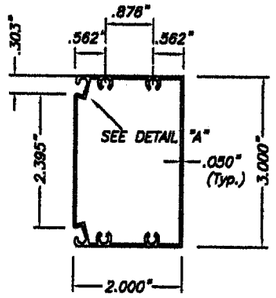

① 2" x 3" PATIO SECTION SCALE: 3/8" = 1"

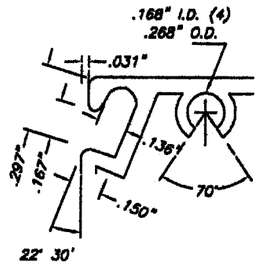

DETAIL "A"

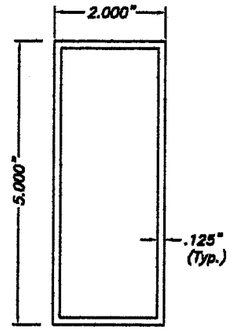

② 2" x 5" BEAM SCALE: 3/8" = 1"

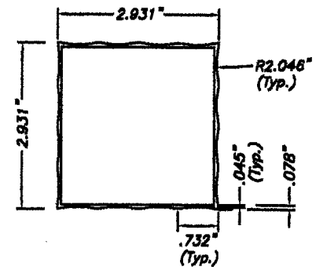

③ 2.931" x 2.931" COLUMN SCALE: 3/8" = 1"

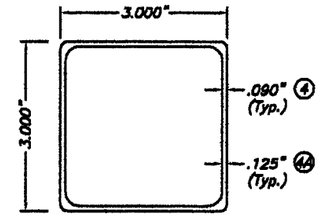

④, ④A 3" x 3" COLUMN SCALE: 3/8" = 1"

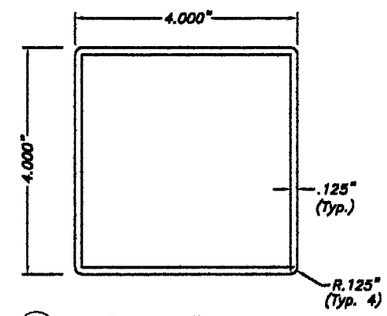

⑤ 4" x 4" COLUMN SCALE: 3/8" = 1"

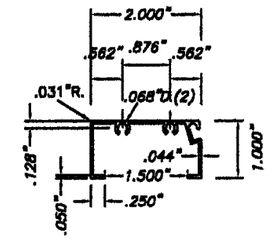

⑥ 1" x 2" 6063-T5 ALUMINUM ALLOY SCALE: 3/8" = 1"

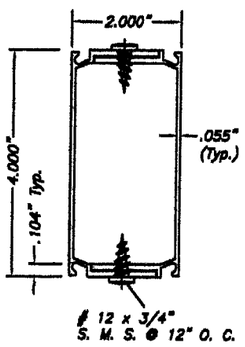

⑦ 2" x 4" LAP COLUMN & BEAM SCALE: 3/8" = 1"

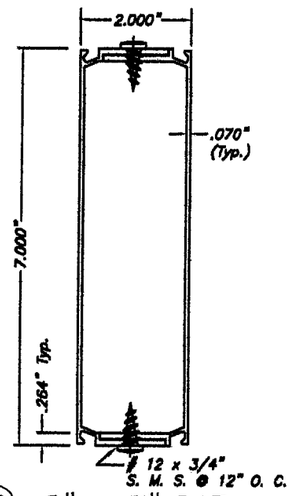

⑧ 2" x 7" LAP BEAM SCALE: 3/4" = 1"

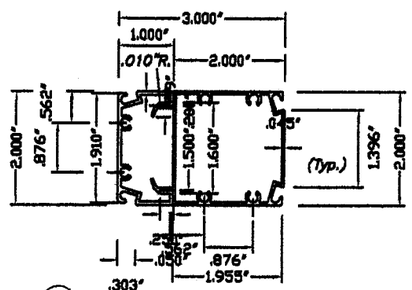

⑨ CORNER COLUMN SCALE: 3/8" = 1"

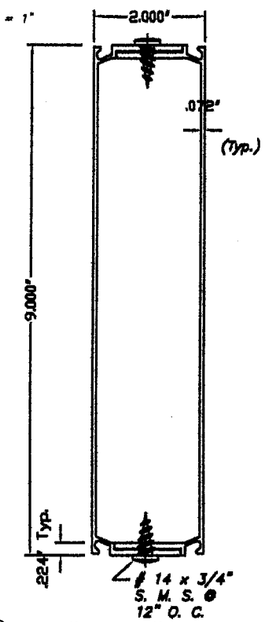

⑩ 2" x 9" LAP BEAM SCALE: 3/8" = 1"

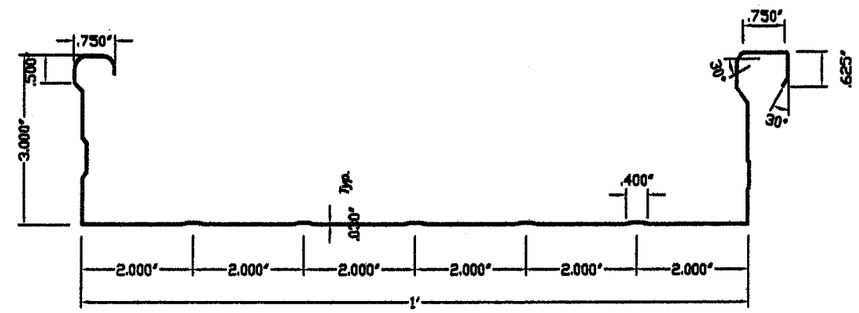

⑪ ROOF PAN SECTION SCALE: 3/8" = 1"

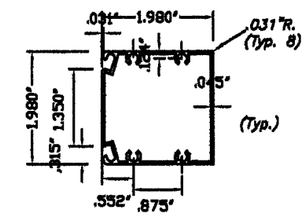

⑫ 2" x 2" 6063-T5 ALUMINUM ALLOY SCALE: 3/8" = 1"

PRODUCT RENEWED
as complying with the Florida Building Code
Acceptance No 06-0410.07
Expiration Date 04/16/2011
By Helmy A. Mekhael
Miami Dade Product Control Division

PRODUCT REVISED
as complying with the Florida Building Code
Acceptance No 05-1220.13
Expiration Date 04/16/2006
By Helmy A. Mekhael
Miami Dade Product Control Division

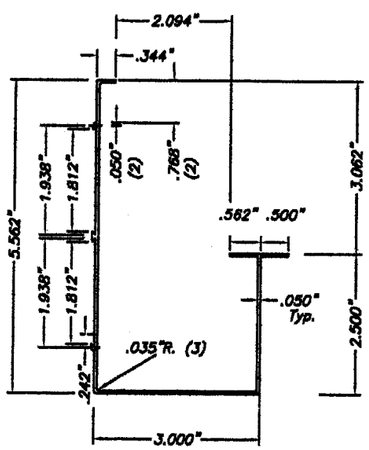

⑬ GUTTER 6063-T5 ALUMINUM ALLOY SCALE: 3/8" = 1"

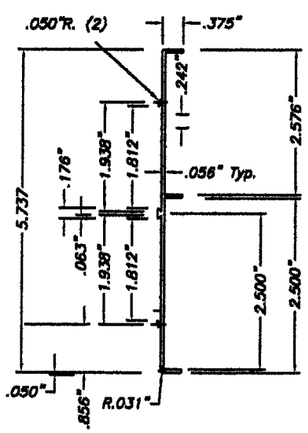

⑭ FASCIA 6063-T5 ALUMINUM ALLOY SCALE: 3/8" = 1"

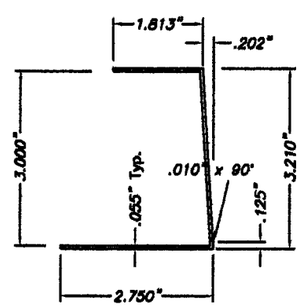

⑮ HEADER SCALE: 3/8" = 1"

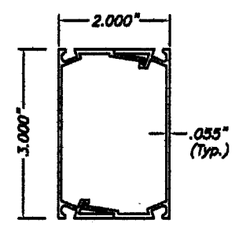

⑯ 2" x 3" SNAP COLUMN SCALE: 3/8" = 1"

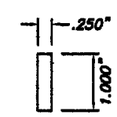

⑰ 1" STRAP 6063-T5 ALUMINUM ALLOY SCALE: 3/8" = 1"

F.B.C. (High Velocity Hurricane Zone)

11/20/05

TILTECO INC.
TILLIT TESTING & ENGINEERING COMPANY
6355 N.W. 36th. St., Ste. 305, MIAMI, Fl. 33166
Phone : (305)871-1530 . Fax : (305)871-1531
EB-0006719
WALTER A. TILLIT Jr., P. E.
FLORIDA Lic. 44167

SCREEN ROOM

MIAMI DADE ALUMINUM SUPPLY
1615 WEST 31st. PLACE
HIALEAH, FLORIDA 33012
PH.:(305)823-0099, FAX:(305)823-2782

REV. NO	DESCRIPTION	DATE	REV. No	DESCRIPTION	DATE
1	OLD 97-07	9/29/05	3		
2	–	–	4		

Drawn by: J.J.V.
9/29/05 DATE
05-312 DRAWING No
SHEET 1A OF 4

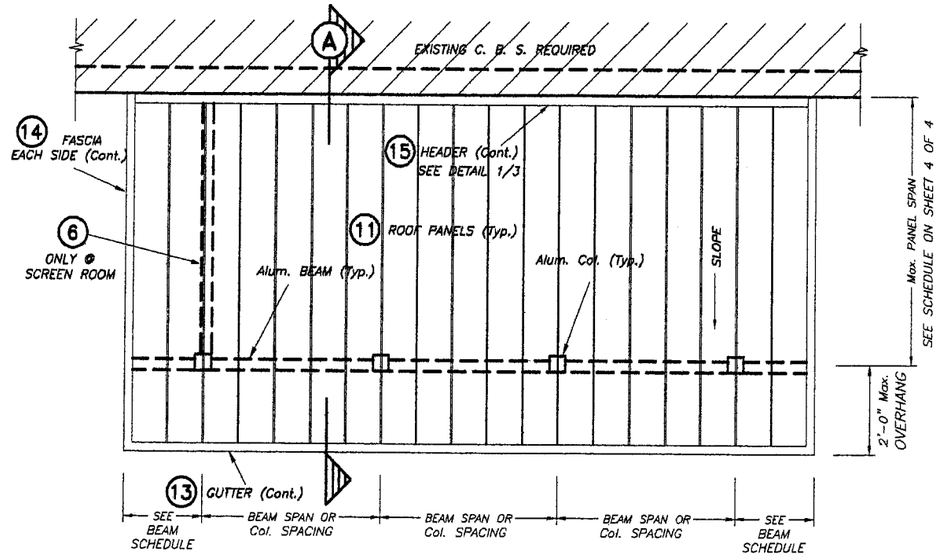

ROOF PLAN–MONOSLOPE ROOF SCREEN ROOM (W/ OR W/O SCREEN)

N. T. S.

NOTE: SEE BEAM & COLUMN SCHEDULE ON SHEET 4 OF 4.

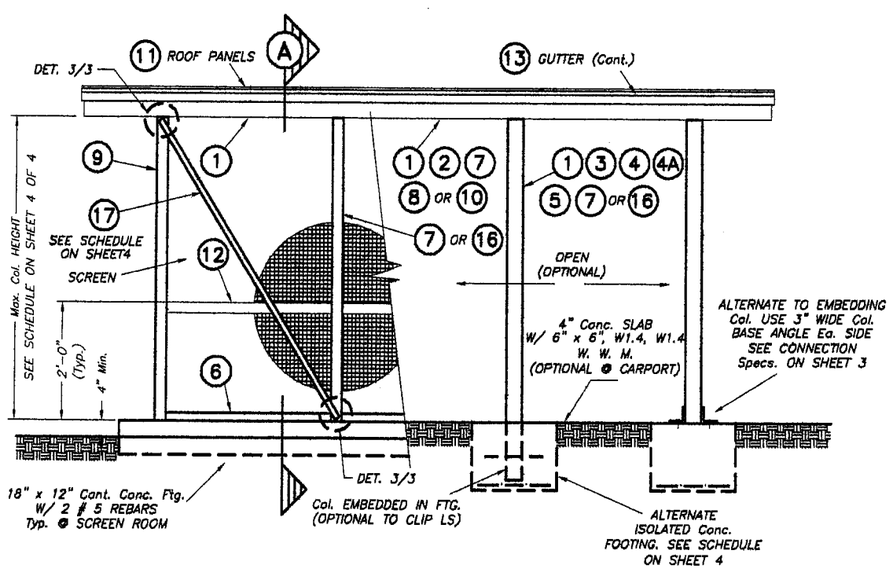

ELEVATION–MONOSLOPE ROOF SCREEN ROOM (W/ OR W/O SCREEN)

N. T. S.

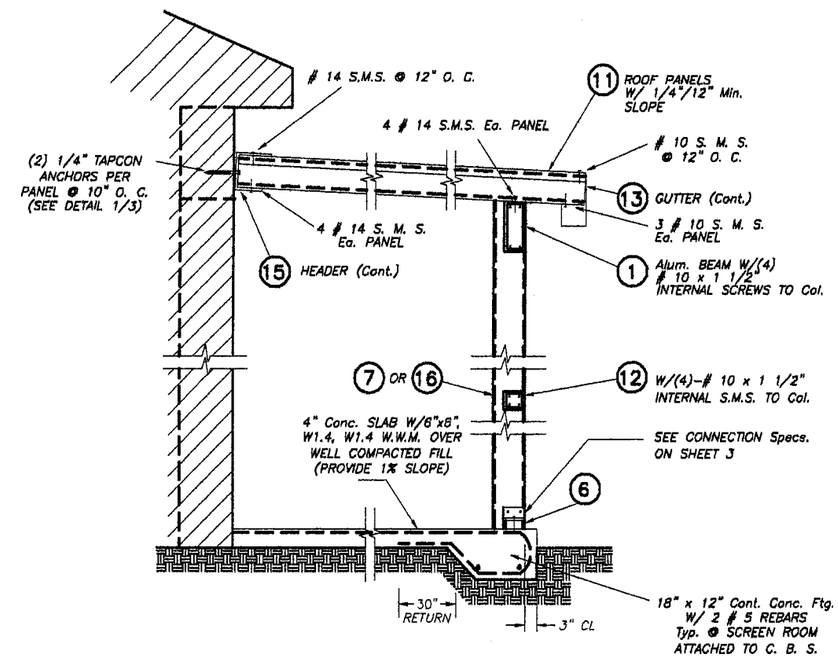

SECTION A

N. T. S.

PRODUCT RENEWED
as complying with the Florida
Building Code
Acceptance No. 06-0410.07
Expiration Date 04/16/2011
By Helena A. Molina
Miami Dade Product Control
Division

PRODUCT REVISED
as complying with the Florida
Building Code
Acceptance No. 05-1220.13
Expiration Date 04/16/2006
By Helena A. Molina
Miami Dade Product Control
Division

F.B.C. (High Velocity Hurricane Zone)

11/30/05

TILTECO INC.
TILLIT TESTING & ENGINEERING COMPANY
6355 N.W. 36th. St., Ste. 305, MIAMI, Fl. 33166
Phone : (305)871-1530 . Fax : (305)871-1531
EB-0008719
WALTER A. TILLIT Jr., P. E.
FLORIDA Lic. 44167

SCREEN ROOM

MIAMI DADE ALUMINUM SUPPLY
1615 WEST 31st. PLACE
HIALEAH, FLORIDA 33012
PH.:(305)823-0099, FAX:(305)823-2782

REV. No	DESCRIPTION	DATE	REV. No	DESCRIPTION	DATE
1	OLD 97-07	9/29/05	3		
2	–	–	4		

Drawn by: J.J.V.

9/29/05 DATE

05-312 DRAWING No

SHEET 2 OF 4

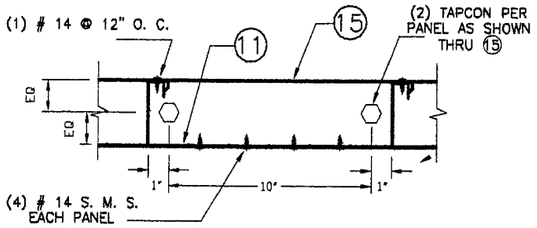

DETAIL 1 : HEADER CONNECTION TO TIE BEAM.

N. T. S.

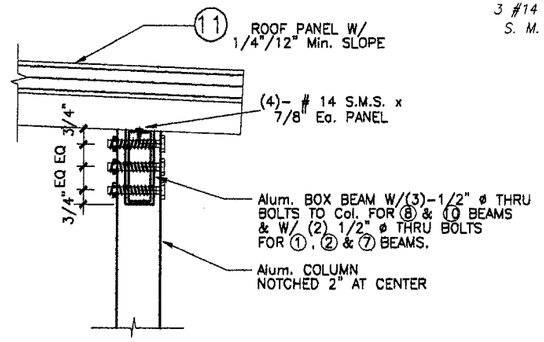

Alt. BEAM/Col. CONNECTION DETAIL

N. T. S.

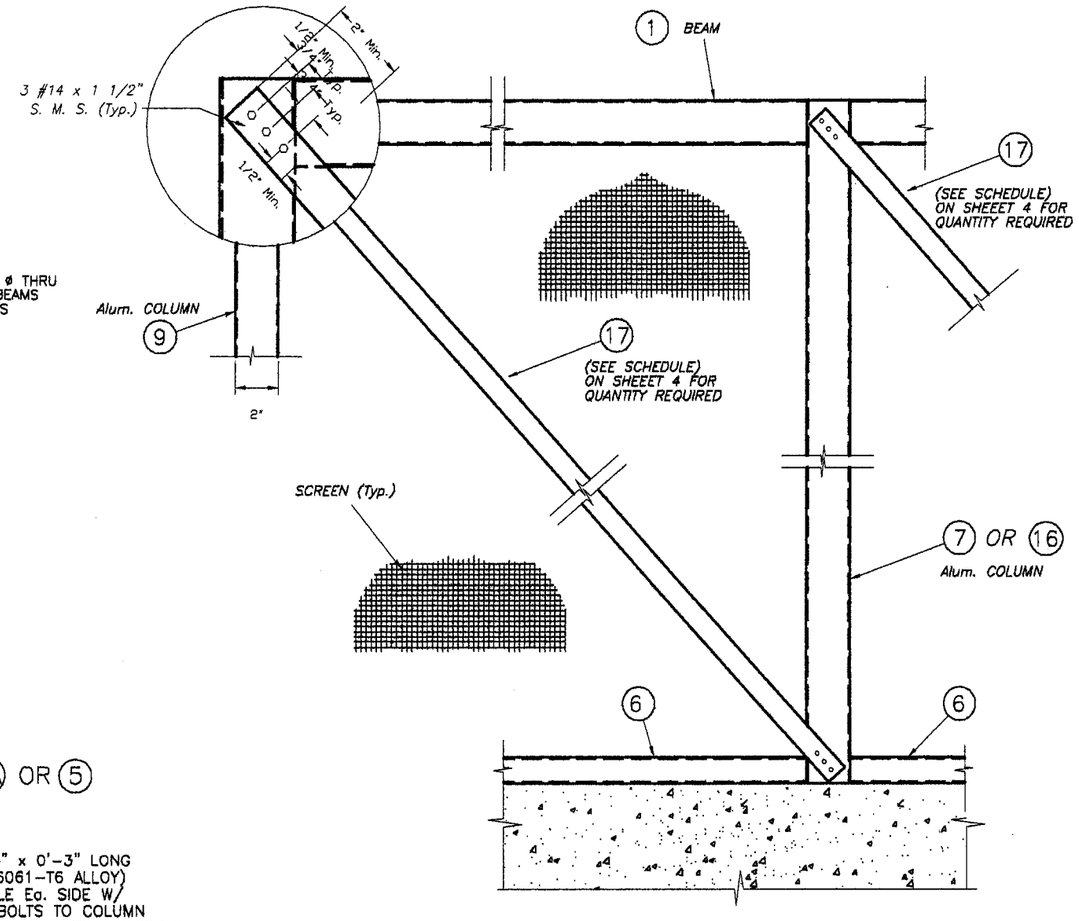

DETAIL 3 : BRACING CONNECTION DETAIL (ELEVATION)

N. T. S.

NOTE : THIS DETAIL IS ONLY REQUIRED FOR SCREEN ROOMS FRONT WALLS.

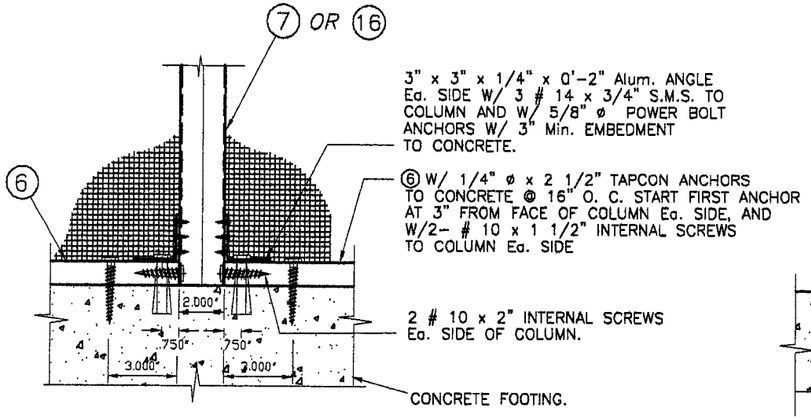

CASE 1

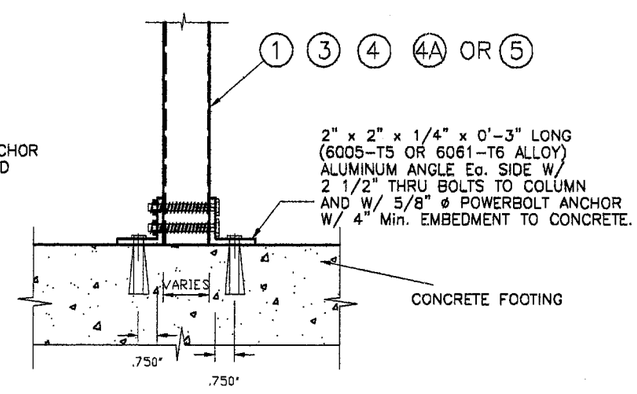

CASE 2

COLUMN CONNECTION TO FOOTING

N. T. S.

PRODUCT RENEWED
as complying with the Florida Building Code
Acceptance No. 06-0410.07
Expiration Date 04/16/2011
By Helena A. Molina
Miami Dade Product Control Division

PRODUCT REVISED
as complying with the Florida Buiding Code
Acceptance No. 05-1220.13
Expiration Date 04/16/2006
By Helena A. Molina
Miami Dade Product Control Division

F.B.C. (High Velocity Hurricane Zone)

11/30/05

TILTECO INC.
TILLIT TESTING & ENGINEERING COMPANY
6355 N.W. 36th. St., Ste. 305, MIAMI, Fl. 33166
Phone : (305)871-1530 . Fax : (305)871-1531
EB-0008719
WALTER A. TILLIT Jr., P. E.
FLORIDA Lic. 44167

SCREEN ROOM

MIAMI DADE ALUMINUM SUPPLY
1615 WEST 31st. PLACE
HIALEAH, FLORIDA 33012
PH.:(305)823-0099, FAX:(305)823-2782

REV. NO	DESCRIPTION	DATE	REV. No	DESCRIPTION	DATE
1	OLD 97-07	9/29/05	3		
2	–	–	4		

Drawn by: J.J.V.
9/29/05 DATE
05-312 DRAWING No
SHEET 3 OF 4

BEAM SCHEDULE MAXIMUM SPAN FOR A GIVEN TRIBUTARY WIDTH *

BEAM TYPE	TRIBUTARY WIDTH *							MAXIMUM BEAM OVERHANG
	3'-0"	4'-0"	5'-0"	6'-0"	7'-0"	8'-0"	9'-0"	
1	4'-3"	3'-8"	3'-4"	3'-0"	–	–	–	1'-1"
	3'-7"	3'-3"	3'-0"	2'-10"	–	–	–	1'-1"
2	9'-4"	8'-1"	7'-3"	6'-7"	6'-1"	5'-9"	5'-5"	2'-7"
	7'-3"	6'-7"	6'-1"	5'-9"	5'-5"	5'-3"	5'-0"	2'-3"
7	6'-7"	5'-8"	5'-1"	4'-8"	–	–	–	1'-6"
	5'-4"	4'-10"	4'-6"	4'-3"	–	–	–	1'-6"
8	12'-10"	11'-1"	8'-5"	9'-1"	8'-5"	7'-10"	7'-5"	3'-0"
	10'-4"	9'-4"	8'-9"	8'-2"	7'-10"	7'-6"	7'-2"	3'-0"
10 **	14'-4"	12'-4"	11'-1"	10'-1"	9'-4"	8'-10"	8'-3"	3'-4"
	12'-2"	11'-1"	10'-4"	9'-8"	9'-2"	8'-10"	8'-3"	3'-4"

* TRIBUTARY WIDTH: – ROOF SPAN (FROM WALL TO FRONT BEAM)/2 + OVERHANG FOR ROOFS ATTACHED TO BUILDING.
– ROOF SPAN (FROM BEAM TO BEAM) FOR ROOFS ATTACHED TO BUILDING WITH MULTIPLE BAYS.

** 10 2" x 9" BEAM SHALL ONLY BE USED JOINTLY WITH COLUMNS 4, 4A OR 5.

COLUMN SCHEDULE

MAXIMUM COLUMN SPACING (Ft.) * FOR A GIVEN HEIGHT, TYPE OF COLUMN AND TYPE OF STRUCTURE WHERE COLUMN IS LOCATED

COLUMN TYPE	L/80 / L/180 ROOF ATTACHED TO PERMANENT BUILDING					
	WITH SCREEN WALLS			W/O SCREEN WALLS		
	7'-0"	7'-6"	8'-0"	8'-0"	9'-0"	10'-0"
16	4'-3"	4'-3"	3'-9"	8'-4"	6'-7"	–
	–	–	–	8'-4"	6'-7"	–
7	4'-3"	4'-3"	4'-3"	12'-0"	10'-0"	–
	4'-3"	4'-3"	4'-3"	12'-0"	10'-0"	–
3	–	–	–	12'-0"	10'-0"	–
	–	–	–	12'-0"	10'-0"	–
4	–	–	–	**	**	**
	–	–	–	**	**	**
4A	–	–	–	**	**	**
	–	–	–	**	**	**
5	–	–	–	**	**	**
	–	–	–	**	**	**

– N/A
* Max. COLUMN SPACING SHALL NOT EXCEED Max. BEAM SPAN AS PER BEAM SCHEDULE FOR A GIVEN BEAM TYPE.
** LIMITED BY BEAM SPAN AS PER BEAM SCHEDULE.

L/80
L/180

* COLUMN MAY ALSO BE CLIPPED ANGLE TO FOOTING INSTEAD OF EMBEDDING, APPLICABLE TO ROOFS ATTACHED TO PERMANENT BUILDING.

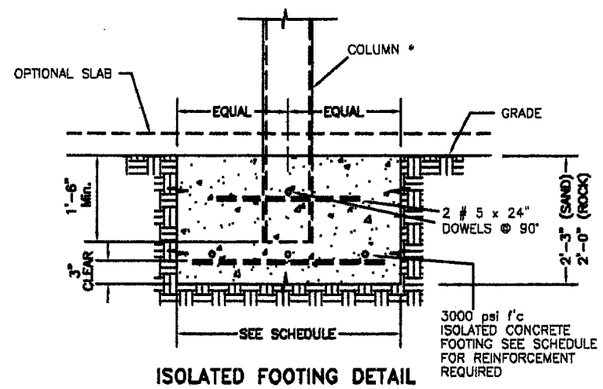

ISOLATED FOOTING DETAIL

Max. ROOF PANEL SPAN SCHEDULE

SPAN CONDITION	Max. SPAN "L"	
	L/80	L/180
L	3'-10"	3'-10"
L 2'	4'-8"	4'-8"
L L	5'-1"	5'-1"
L L L	5'-3"	5'-3"

MAXIMUM SPAN TABLE FOR A GIVEN TRIBUTARY AREA

ROOF AREA BEARING OR COLUMN (Ft.²)*	REQUIRED FOOTING SIZE IN SAND/ROCK	REINFORCING STEEL EQUALY SPACED EACH WAY. SAND/ROCK
120	5'-4" x 5'-4" / 3'-0" x 3'-0"	5 # 4 REBARS / 4 # 4 REBARS
90	4'-7" x 4'-7" / 2'-3" x 2'-3"	4 # 4 REBARS / 3 # 4 REBARS
60	3'-9" x 3'-9" / 2'-0" x 2'-0"	4 # 4 REBARS / 3 # 4 REBARS
40	3'-0" x 3'-0" / 2'-0" x 2'-0"	3 # 4 REBARS / 3 # 4 REBARS
25	2'-4" x 2'-4" / 2'-0" x 2'-0"	3 # 4 REBARS / 3 # 4 REBARS

* ROOF PANEL SPAN x BEAM SPAN (INTERIOR COLUMNS) OR (ROOF PANEL SPAN/2 + O. H.) x BEAM SPAN (END COLUMNS)

STRAP 17 SCHEDULE

(REQ'D ONLY AT SCREEN ROOM)

ROOF PROJECTION P (ft.)	TOTAL NUMBER OF STRAPS AT FRONT WALL
5'-0" OR LESS	2
>5'-0" TO 10'-0"	4
>10'-0" TO 15'-0" Max.	6

P = DISTANCE FROM EXISTING WALL TO FRONT SCREEN WALL

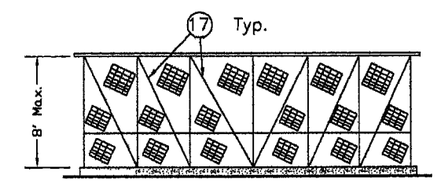

FRONT WALL ELEV.

PRODUCT RENEWED
as complying with the Florida Building Code
Acceptance No 06-0410.07
Expiration Date 04/16/2011
By Helena A. Molina
Miami Dade Product Control Division

PRODUCT REVISED
as complying with the Florida Building Code
Acceptance No 05-1220.13
Expiration Date 04/16/2006
By Helena A. Molina
Miami Dade Product Control Division

11/30/05

F.B.C. (High Velocity Hurricane Zone)

TILTECO INC.
TILLIT TESTING & ENGINEERING COMPANY
6355 N.W. 36th. St., Ste. 305, MIAMI, Fl. 33166
Phone : (305)871-1530 . Fax : (305)871-1531
EB-0005719
WALTER A. TILLIT Jr., P. E.
FLORIDA Lic. 44167

SCREEN ROOM

MIAMI DADE ALUMINUM SUPPLY
1615 WEST 31st. PLACE
HIALEAH, FLORIDA 33012
PH.:(305)823-0099, FAX:(305)823-2782

REV. NO	DESCRIPTION	DATE	REV. No	DESCRIPTION	DATE
1	OLD 97-07	9/29/05	3		
2	–	–	4		

Drawn by: J.J.V.
9/29/05 DATE
05-312 DRAWING No
SHEET 4 OF 4