MIAMI-DADE

BUILDING CODE COMPLIANCE OFFICE (BCCO)
PRODUCT CONTROL DIVISION

MIAMI-DADE COUNTY, FLORIDA
METRO-DADE FLAGLER BUILDING
140 WEST FLAGLER STREET, SUITE 1603
MIAMI, FLORIDA 33130-1563
(305) 375-2901 FAX (305) 375-2908

NOTICE OF ACCEPTANCE (NOA)

Air Vent, Inc.
4117 Pinnacle Point Drive
Dallas, TX. 75212

SCOPE:
This NOA is being issued under the applicable rules and regulations governing the use of construction materials. The documentation submitted has been reviewed by Miami-Dade County Product Control Division and accepted by the Board of Rules and Appeals (BORA) to be used in Miami Dade County and other areas where allowed by the Authority Having Jurisdiction (AHJ).
This NOA shall not be valid after the expiration date stated below. The Miami-Dade County Product Control Division (In Miami Dade County) and/or the AHJ (in areas other than Miami Dade County) reserve the right to have this product or material tested for quality assurance purposes. If this product or material fails to perform in the accepted manner, the manufacturer will incur the expense of such testing and the AHJ may immediately revoke, modify, or suspend the use of such product or material within their jurisdiction. BORA reserves the right to revoke this acceptance, if it is determined by Miami-Dade County Product Control Division that this product or material fails to meet the requirements of the applicable building code.

This product is approved as described herein, and has been designed to comply with the Florida Building Code, including the High Velocity Hurricane Zone.

DESCRIPTION: Turbine Roof Ventilator-Aluminum.

LABELING: Each unit shall bear a permanent label with the manufacturer's name or logo, city, state and following statement: "Miami-Dade County Product Control Approved", unless otherwise noted herein.

RENEWAL of this NOA shall be considered after a renewal application has been filed and there has been no change in the applicable building code negatively affecting the performance of this product.

TERMINATION of this NOA will occur after the expiration date or if there has been a revision or change in the materials, use, and/or manufacture of the product or process. Misuse of this NOA as an endorsement of any product, for sales, advertising or any other purposes shall automatically terminate this NOA. Failure to comply with any section of this NOA shall be cause for termination and removal of NOA.

ADVERTISEMENT: The NOA number preceded by the words Miami-Dade County, Florida, and followed by the expiration date may be displayed in advertising literature. If any portion of the NOA is displayed, then it shall be done in its entirety.

INSPECTION: A copy of this entire NOA shall be provided to the user by the manufacturer or its distributors and shall be available for inspection at the job site at the request of the Building Official.

This NOA revises and renews NOA # 01-0606.05 and consists of pages 1 through 6.
The submitted documentation was reviewed by Alex Tigera.

ROOFING COMPONENT APPROVAL

Category: Roofing
Sub-Category: Vents
Material Aluminum

TRADE NAMES OF PRODUCTS MANUFACTURED OR LABELED BY APPLICANT

Product	Dimensions	Test Specification	Product Description
TOB-12S Turbine Vent	12" wide at base 17-1/2" high thickness: 0.025"	TAS 100(A)	Turbine ventilation system.
TIB-12S Turbine Vent	12" wide at base 17" high thickness: 0.025"	TAS 100(A)	Turbine ventilation system.

TEST REPORTS

Test Agency/Identifier	Name	Report	Date
Celotex Corporation Testing Service	TAS 100(A)	MTS 258328B	11/97
Celotex Corporation Testing Service	TAS 100(A)	MTS –258328A	11/97

APPROVED APPLICATIONS

Tradename: TOB-12S, TIB-12S

System Type : Mechanical attachment of turbine vent over composition shingles.

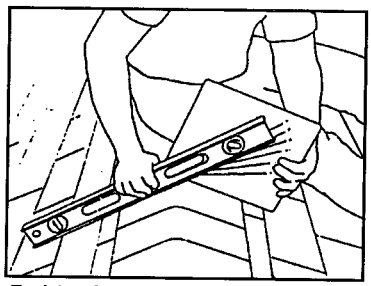

To determine roof pitch, stand pitch gauge on peak of roof. Place straight edge on opposite side of roof. Read roof pitch from printed gauge parallel to bottom of staight edge.

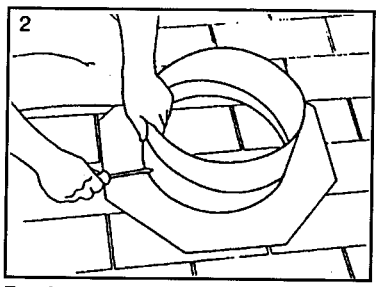

Turn bottom of collar clockwise to match roof pitch with indicator line on flashing. Place 3 screws through holes that align with predrilled base holes.

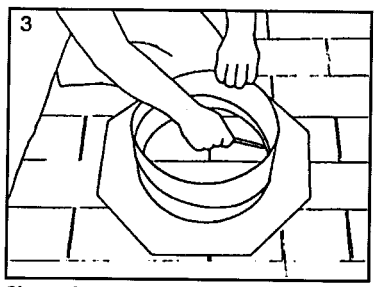

Choose location of turbine. Center between two rafters and mark hole to be cut.

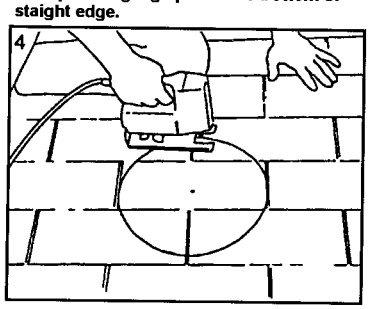

Cut hole as marked and seal around top and sides with roofing cement.

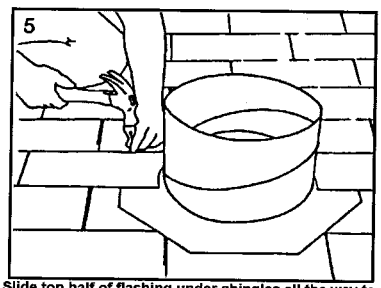

Slide top half of flashing under shingles all the way to the collar. Apply a 1/2" bead of caulk between the roof deck and the bottom face of the vent flange. Secure with (12) 1-1/4" x 3/8" galvanized ring shank nails.

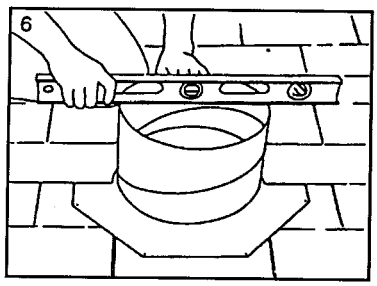

Turn top of collar counter-clockwise to a level position.

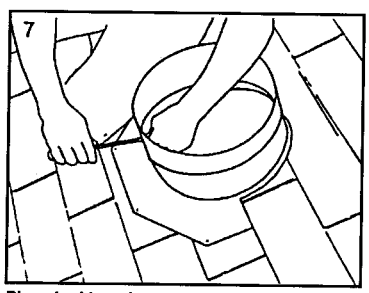

Place locking clamp across seam and tighten with machine screw.

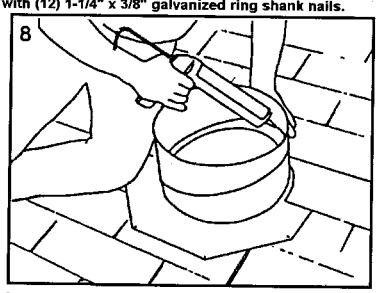

Using caulk, fasten down any loose shingles. Using caulk, seal all seams and nails.

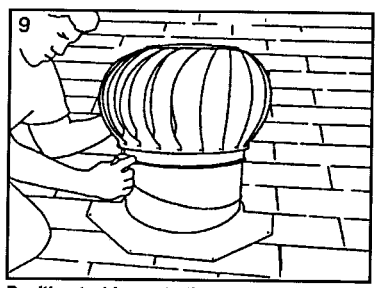

Position turbine onto the collar, locating the vertical legs into the collar slots. Install the #10 x 1" sheet metal screws through the vertical legs and into the entruded holes in the collar. Tighten the screw firmly, but do not over-tighten to the point that the screw strips out.

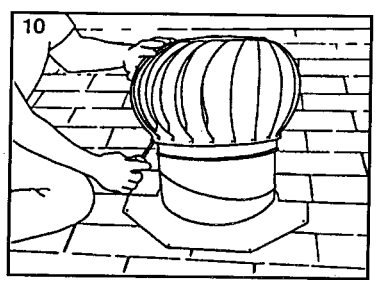

After completing installation, check to make sure the turbine turns freely. The turbine may have shifted in transportation. If necessary, gently pry lowest point of turbine upward to remove any wobble.

Net Free Area= See manufacturer's published literature

DETAIL A
TOB-12S

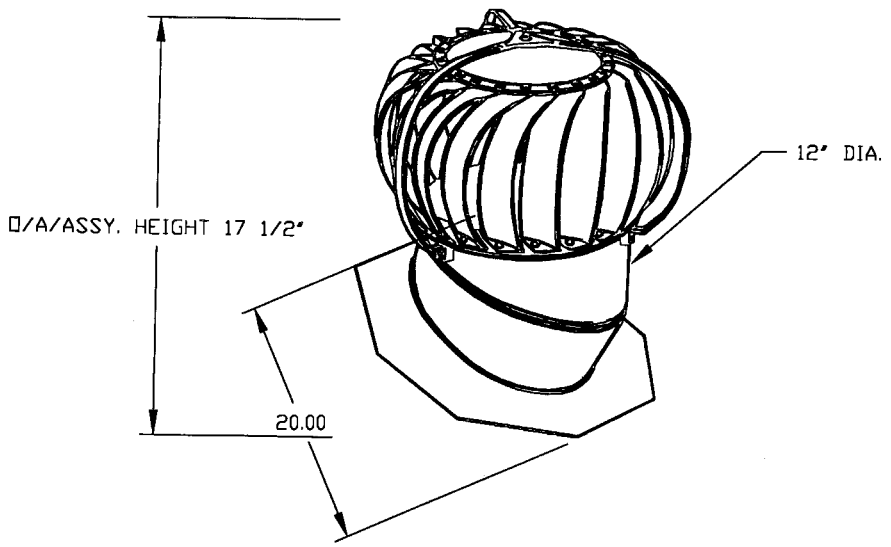

DETAIL B
TIB-12S

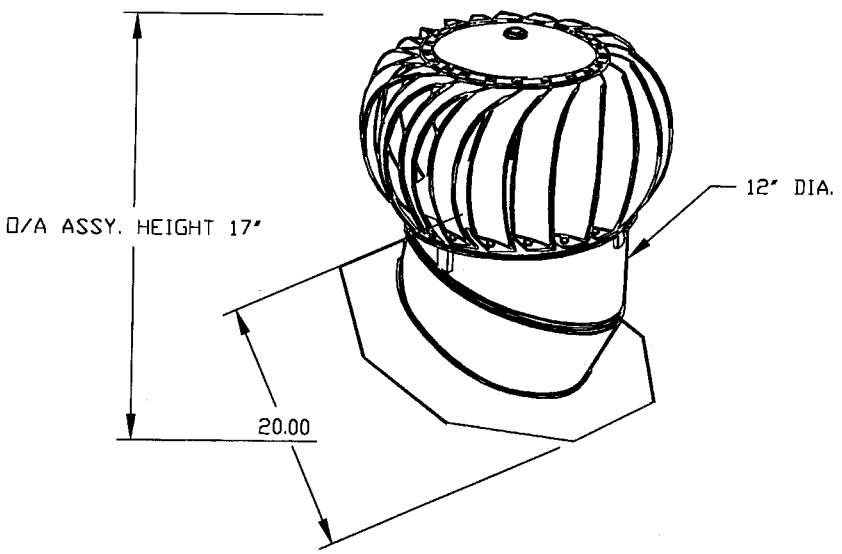

DETAIL C
BASE NAILING PATTERN

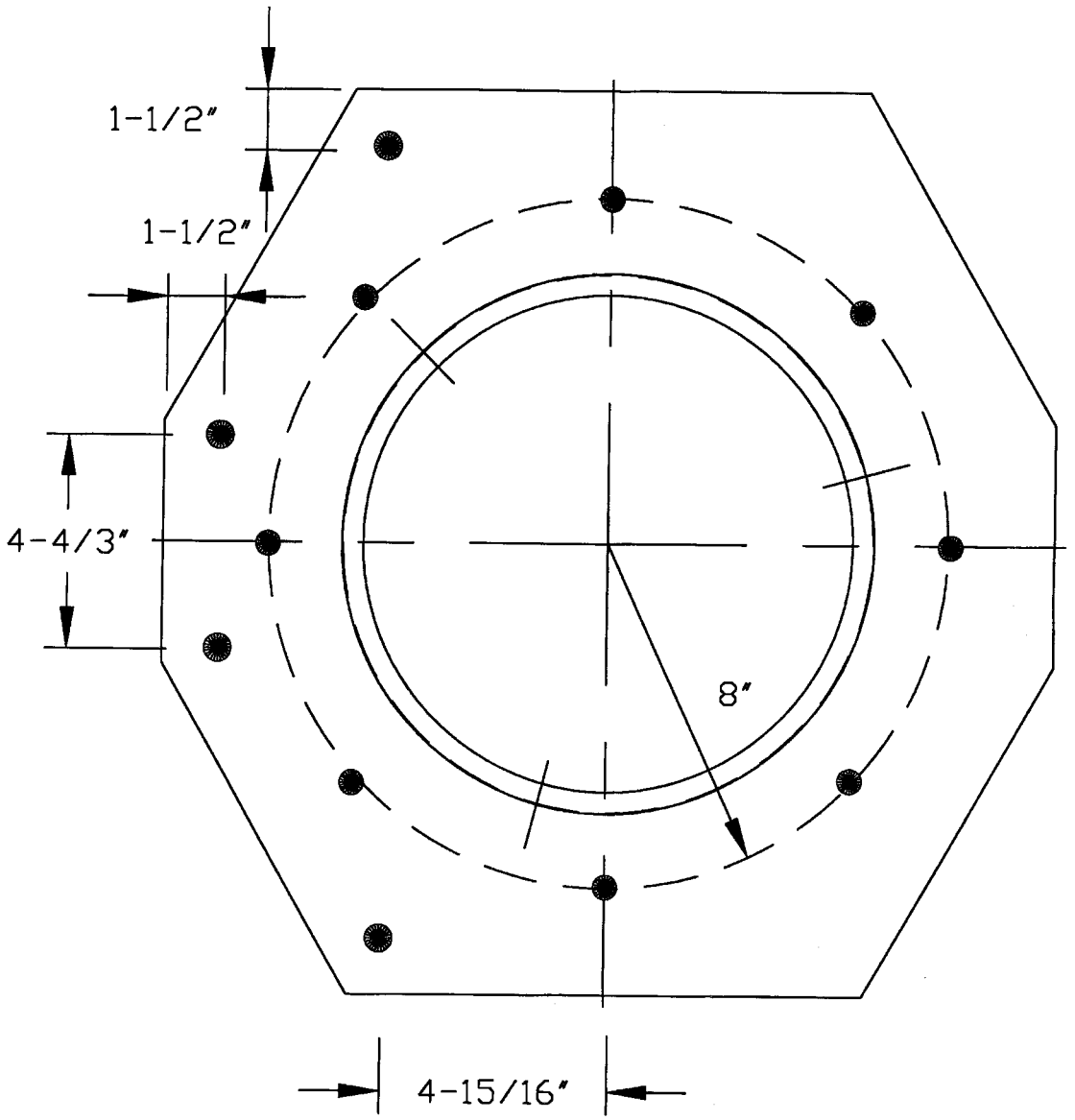

LOWER END **UPPER END**

GENERAL LIMITATIONS:

1. Refer to applicable building codes for required ventilation.
2. TOB-12S, TIB-12S turbine roof ventilators shall be installed over composition shingles roofs only.
3. TOB-12S, TIB-12S turbine roof ventilators shall not be installed on roof mean heights greater than 33 feet.

END OF THIS ACCEPTANCE