MIAMI-DADE COUNTY

BUILDING CODE COMPLIANCE OFFICE (BCCO)
PRODUCT CONTROL DIVISION

MIAMI-DADE COUNTY, FLORIDA
METRO-DADE FLAGLER BUILDING
140 WEST FLAGLER STREET, SUITE 1603
MIAMI, FLORIDA 33130-1563
(305) 375-2901 FAX (305) 375-2908
www.buildingcodeonline.com

NOTICE OF ACCEPTANCE (NOA)

Kinco Windows & Doors
P.O. Box 6429
Jacksonville, FL 32236

SCOPE:

This NOA is being issued under the applicable rules and regulations governing the use of construction materials. The documentation submitted has been reviewed by Miami-Dade County Product Control Division and accepted by the Board of Rules and Appeals (BORA) to be used in Miami Dade County and other areas where allowed by the Authority Having Jurisdiction (AHJ).

This NOA shall not be valid after the expiration date stated below. The Miami-Dade County Product Control Division (In Miami Dade County) and/or the AHJ (in areas other than Miami Dade County) reserve the right to have this product or material tested for quality assurance purposes. If this product or material fails to perform in the accepted manner, the manufacturer will incur the expense of such testing and the AHJ may immediately revoke, modify, or suspend the use of such product or material within their jurisdiction. BORA reserves the right to revoke this acceptance, if it is determined by Miami-Dade County Product Control Division that this product or material fails to meet the requirements of the applicable building code.

This product is approved as described herein, and has been designed to comply with the Florida Building Code, including the High Velocity Hurricane Zone.

DESCRIPTION: Series-M40 HP & XHP Aluminum Single Hung Window – N.I.

APPROVAL DOCUMENT: Drawing No. **W03-110,** titled "M40 HP & XHP Alum Single Hung Wdw (N.I.).", sheets 1 through 9 of 9, prepared by AL- Farooq Corporation, dated 12/05/03, with revision **"B"** dated 04/10/06, signed and sealed by Humayoun Farooq, P.E., bearing the Miami-Dade County Product Control Revision stamp with the Notice of Acceptance number and expiration date by the Miami-Dade County Product Control Division.

MISSILE IMPACT RATING: None

LABELING: Each unit shall bear a permanent label with the manufacturer's name or logo, city, state and following statement: "Miami-Dade County Product Control Approved", unless otherwise noted herein.

RENEWAL of this NOA shall be considered after a renewal application has been filed and there has been no change in the applicable building code negatively affecting the performance of this product.

TERMINATION of this NOA will occur after the expiration date or if there has been a revision or change in the materials, use, and/or manufacture of the product or process. Misuse of this NOA as an endorsement of any product, for sales, advertising or any other purposes shall automatically terminate this NOA. Failure to comply with any section of this NOA shall be cause for termination and removal of NOA.

ADVERTISEMENT: The NOA number preceded by the words Miami-Dade County, Florida, and followed by the expiration date may be displayed in advertising literature. If any portion of the NOA is displayed, then it shall be done in its entirety.

INSPECTION: A copy of this entire NOA shall be provided to the user by the manufacturer or its distributors and shall be available for inspection at the job site at the request of the Building Official.

This NOA **revises NOA# 04-0204.05** and consists of this page 1 and evidence pages E-1 and E-2, as well as approval document mentioned above.

The submitted documentation was reviewed by **Jaime D. Gascon, P.E.**

PRODUCT CONTROL ACCEPTED

J. Gascon
5/9/06

Kinco Windows and Doors

NOTICE OF ACCEPTANCE: EVIDENCE SUBMITTED

A. DRAWINGS

1. Manufacturers die drawings and sections.
2. Drawing No. **W03-110,** titled "M40 HP & XHP Alum Single Hung Wdw (N.I.).", sheets 1 through 9 of 9, prepared by AL- Farooq Corporation, dated 12/05/03, with revisions **"B"** dated 04/10/06, signed and sealed by Humayoun Farooq, P.E.

B. TESTS

1. Test reports on 1) Air Infiltration Test, per FBC, TAS 202-94
   2) Uniform Static Air Pressure Test, Loading per FBC, TAS 202-94
   3) Water Resistance Test, per FBC, TAS 202-94
   4) Forced Entry Test, per FBC 2411.3.2.1 (b) TAS 202-94

   along with marked-up drawings and installation diagram of aluminum single hung window, prepared by Certified Testing Laboratories Architectural Division, Test Report No. **CTLA-1506-W,** dated 03/06/06, signed and sealed by Ramesh Patel, P.E.
2. Test reports on 1) Air Infiltration Test, per FBC, TAS 202-94
   2) Uniform Static Air Pressure Test, Loading per FBC, TAS 202-94
   3) Water Resistance Test, per FBC, TAS 202-94
   4) Forced Entry Test, per FBC 2411.3.2.1 (b) TAS 202-94

   along with marked-up drawings and installation diagram of aluminum single hung window, prepared by Certified Testing Laboratories Architectural Division, Test Report No. **CTLA-1182-W,** dated 10/28/03, signed and sealed by Ramesh Patel, P.E.
   "Submitted under NOA# 04-0204.05"
3. Test report on 1) Uniform Static Air Pressure Test, Loading per FBC, TAS 202-94 along with marked-up drawings and installation diagram of aluminum single hung window, prepared by Certified Testing Laboratories Architectural Division, Test Report No. **CTLA-1182-W-R,** dated 01/20/04, signed and sealed by Ramesh Patel, P.E.
   "Submitted under NOA# 04-0204.05"

C. CALCULATIONS

1. Revised Anchor Calculations and structural analysis, complying with FBC-2004, prepared by AL-Farooq Corporation, dated 04/01/06, signed and sealed by Humayoun Farooq, P.E.
   Complies with ASTM E- 1300-98

D. QUALITY ASSURANCE

1. Miami Dade Building Code Compliance Office (BCCO).

Jaime D. Gascon, P.E.
Chief , Product Control Division
NOA No 06-0413.06
Expiration Date: April 29, 2009
Approval Date: May 25, 2006

E. MATERIAL CERTIFICATIONS

1. None

Kinco Windows and Doors

NOTICE OF ACCEPTANCE: EVIDENCE SUBMITTED

F. STATEMENTS

1. Statement letter of conformance and no financial interest, dated 04/01/06, signed and sealed by Humayoun Farooq, P.E.

G. OTHER

1. Notice of Acceptance No. **04-0204.05**, issued to Kinco Windows & Doors, for their "M40 XHP Alum Single Hung Window (N.I.)", approved on 04/29/04 and expiring on 04/29/09.

Jaime D. Gascon, P.E.
Chief , Product Control Division
NOA No 06-0413.06
Expiration Date: April 29, 2009
Approval Date: May 25, 2006

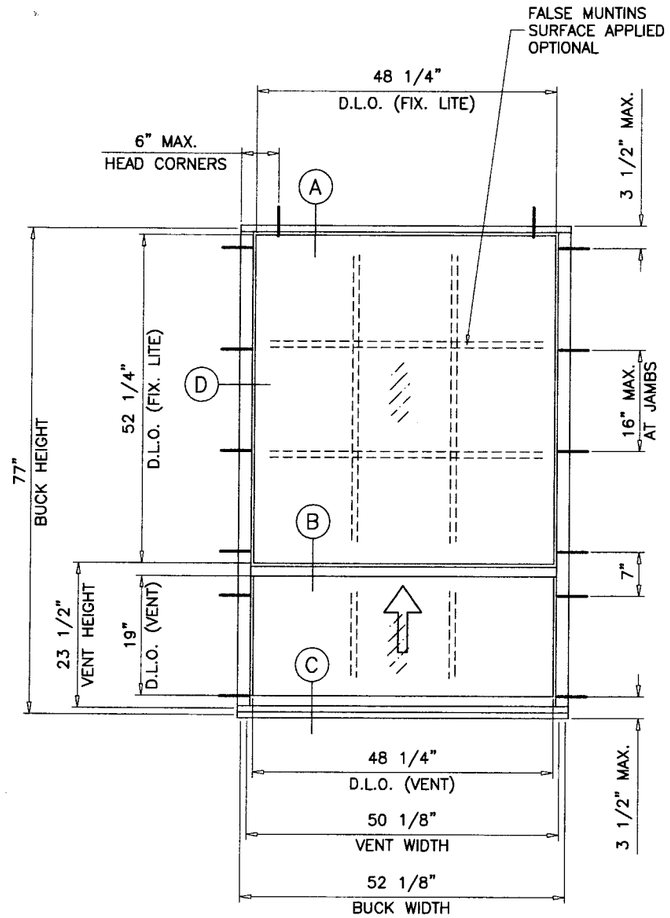

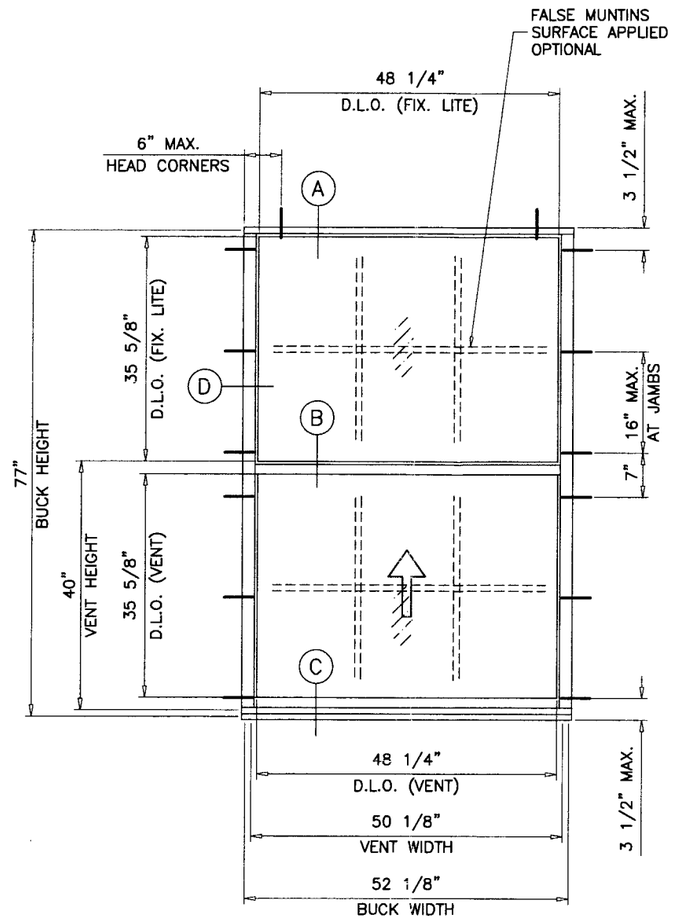

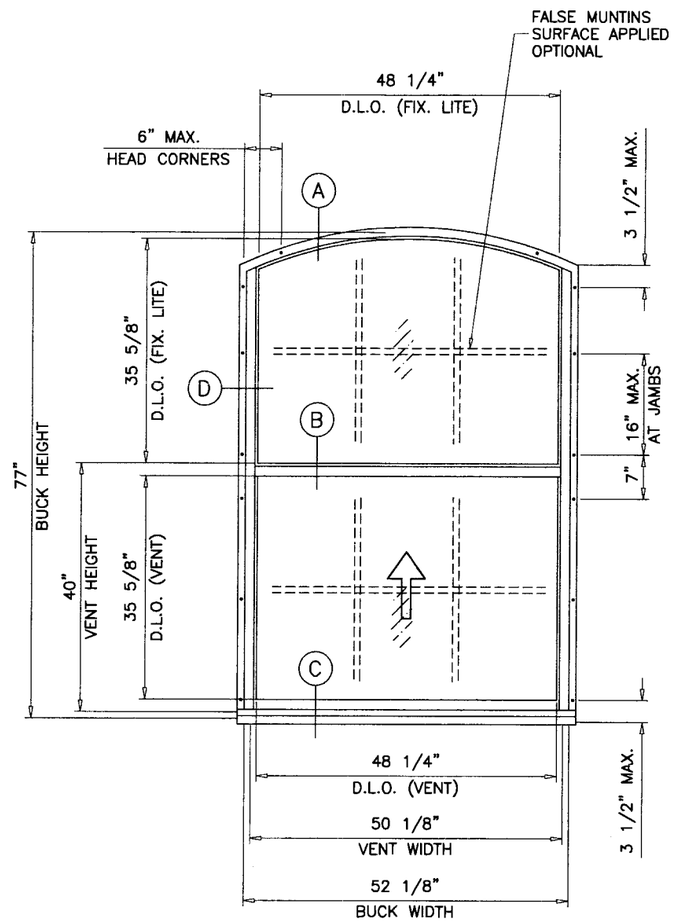

TYPICAL ELEVATION
TESTED UNITS

M40 HP & XHP ALUMINUM SINGLE HUNG WINDOW NON-IMPACT

DESIGN LOAD RATINGS FOR THESE WINDOWS TO BE AS PER CHARTS SHOWN ON SHEETS 2 THRU 5.

INSTALLATION OF THIS PRODUCT IN THE HVHZ AREA REQUIRES THE USE OF APPROVED SHUTTERS OR EXTERNAL PROTECTION DEVICES COMPLYING WITH HVHZ REQUIREMENTS.

THIS PRODUCT HAS BEEN DESIGNED AND TESTED TO COMPLY WITH THE REQUIREMENTS OF THE FLORIDA BUILDING CODE 2004 EDITION (REV. 2005) FOR THE HIGH VELOCITY HURRICANE ZONE (HVHZ).

WOOD BUCKS BY OTHERS, MUST BE ANCHORED PROPERLY TO TRANSFER LOADS TO THE STRUCTURE.

ANCHORS SHALL BE AS LISTED, SPACED AS SHOWN ON DETAILS, ANCHORS EMBEDMENT TO BASE MATERIAL SHALL BE BEYOND WALL DRESSING OR STUCCO.

ANCHORING OR LOADING CONDITIONS NOT SHOWN IN THESE DETAILS ARE NOT PART OF THIS APPROVAL.

A LOAD DURATION INCREASE IN ALLOWABLE STRESS IS USED IN DESIGN OF WOOD ANCHORS ONLY.

ALL STEEL IN CONTACT WITH ALUMINUM TO BE PAINTED OR PLATED.

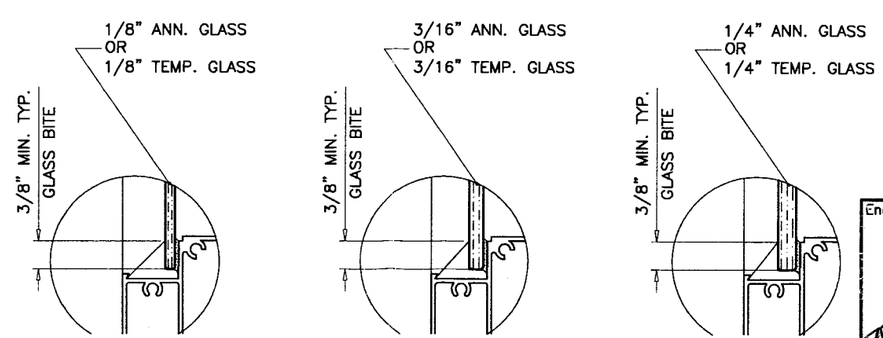

GLAZING OPTIONS

PRODUCT REVISED
as complying with the Florida
Building Code
Acceptance No 06-0413.06
Expiration Date 04/29/09
By
Miami-Dade Product Control
Division

Engr: DR. HUMAYOUN FAROOQ
STRUCTURES
FLA. PE # 16557
C.A.N. 3538

APR 1 1 2006

AL-FAROOQ CORPORATION
ENGINEERS, PLANNERS & PRODUCT DESIGN
1235 SW 87 AVE
MIAMI, FLORIDA 33174
TEL. (305) 264-8100 FAX. (305) 262-6978
COMP-ANL\W03-110KL

M40 HP & XHP ALUM SINGLE HUNG WDW. (N.I.)

KINCO WINDOWS & DOORS
3600 PORT JACKSONVILLE PARKWAY
JACKSONVILLE, FL 32226
TEL. (904) 355-1476 FAX. (904) 353-0689

revisions:

no	date	by	description
A	03.20.04		NO CHANGE THIS SHEET
B	04.10.06		NOTES REV. HP ADDED

date: 12-05-03
scale: 1/2"=1'-0"
dr. by: HAMID
chk. by:

drawing no.
W03-110

EQUAL LITES WINDOWS
DESIGN LOAD CAPACITY – PSF

BUCK DIMS.		FLANGE OR FIN FRAMES											
		1/8" ANN. GLASS		3/16" ANN. GLASS		1/4" ANN. GLASS		1/8" TEMP. GLASS		3/16" TEMP. GLASS		1/4" TEMP. GLASS	
WIDTH	HEIGHT	EXT.(+)	1NT.(–)	EXT.(+)	1NT.(–)	EXT.(+)	1NT.(–)	EXT.(+)	1NT.(–)	EXT.(+)	1NT.(–)	EXT.(+)	1NT.(–)
18–1/8"	25" (4)	68.3	78.4	68.3	125.0	68.3	167.0	68.3	210.0	68.3	210.0	68.3	210.0
25–1/2"		68.3	78.4	68.3	125.0	68.3	167.0	68.3	210.0	68.3	210.0	68.3	210.0
36"		68.3	78.4	68.3	125.0	68.3	167.0	68.3	170.2	68.3	171.5	68.3	171.5
52–1/8"		68.3	78.4	68.3	99.3	68.3	118.5	68.3	110.4	68.3	118.5	68.3	118.5
18–1/8"	37–3/8" (4)	68.3	78.4	68.3	125.0	68.3	167.0	68.3	210.0	68.3	210.0	68.3	210.0
25–1/2"		68.3	78.4	68.3	125.0	68.3	162.0	68.3	162.0	68.3	162.0	68.3	162.0
36"		62.2	62.2	68.3	114.3	68.3	114.7	68.3	114.7	68.3	114.7	68.3	114.7
52–1/8"		45.3	45.3	68.3	71.2	68.3	79.2	68.3	79.2	68.3	79.2	68.3	79.2
52–1/8"	37–3/8" (6)	X	X	X	X	X	X	X	X	68.3	110.8	68.3	118.9
18–1/8"	49–5/8" (6)	68.3	78.4	68.3	125.0	68.3	167.0	68.3	210.0	68.3	210.0	68.3	210.0
25–1/2"		68.3	76.9	68.3	125.0	68.3	167.0	68.3	183.0	68.3	183.0	68.3	183.0
36"		57.7	57.7	68.3	92.7	68.3	129.6	68.3	108.1	68.3	129.6	68.3	129.6
52–1/8"		33.1	33.1	57.8	57.8	68.3	83.5	64.2	64.2	68.3	89.5	68.3	89.5
52–1/8"	49–5/8" (8)	X	X	X	X	X	X	X	X	X	X	X	X
18–1/8"	54–7/8" (6)	68.3	78.4	68.3	125.0	68.3	167.0	68.3	210.0	68.3	210.0	68.3	210.0
25–1/2"		68.3	70.1	68.3	123.7	68.3	165.5	68.3	165.5	68.3	165.5	68.3	165.5
36"		52.5	52.5	68.3	84.5	68.3	116.0	68.3	103.5	68.3	117.2	68.3	117.2
52–1/8"		34.2	34.2	54.0	54.0	68.3	77.5	60.1	60.1	68.3	81.0	68.3	81.0
52–1/8"	54–7/8" (8)	X	X	X	X	X	X	X	X	68.3	84.1	68.3	96.1
18–1/8"	62" (6)	68.3	80.3	68.3	125.0	68.3	167.0	68.3	206.1	68.3	206.1	68.3	206.1
25–1/2"		63.2	63.2	68.3	106.7	68.3	146.5	68.3	146.5	68.3	146.5	68.3	146.5
36"		47.6	47.6	68.3	76.2	68.3	100.2	68.3	99.6	68.3	103.7	68.3	103.7
52–1/8"		32.4	32.4	50.2	50.2	68.0	68.0	55.7	55.7	68.3	71.6	68.3	71.6
52–1/8"	62" (8)	X	X	X	X	X	X	X	X	68.3	78.0	68.3	89.2
18–1/8"	71" (6)	68.3	68.5	68.3	125.0	68.3	167.0	68.3	179.9	68.3	179.9	68.3	179.9
25–1/2"		52.7	52.7	68.3	92.7	68.3	127.9	68.3	127.9	68.3	127.9	68.3	127.9
36"		43.3	43.3	68.3	68.5	68.3	86.3	68.3	90.6	68.3	90.6	68.3	90.6
52–1/8"		30.2	30.2	46.7	46.7	60.9	60.9	51.9	51.9	62.6	62.6	62.6	62.6
52–1/8"	71" (8)	X	X	X	X	X	X	X	X	68.3	72.6	68.3	83.0
18–1/8"	77" (6)	63.3	63.3	68.3	125.0	68.3	165.9	68.3	165.9	68.3	165.9	68.3	165.9
25–1/2"		48.4	48.4	68.3	85.9	68.3	117.9	68.3	117.9	68.3	117.9	68.3	117.9
36"		40.2	40.2	63.7	63.7	68.3	79.3	68.3	83.5	68.3	83.5	68.3	83.5
52–1/8"		28.4	28.4	45.0	45.0	57.4	57.4	50.0	50.0	57.7	57.7	57.7	57.7
52–1/8"	77" (8)	X	X	X	X	X	X	X	X	68.3	70.0	68.3	76.9

* NO. IN PARENTHESIS INDICATE NO. OF ANCHORS PER JAMB.

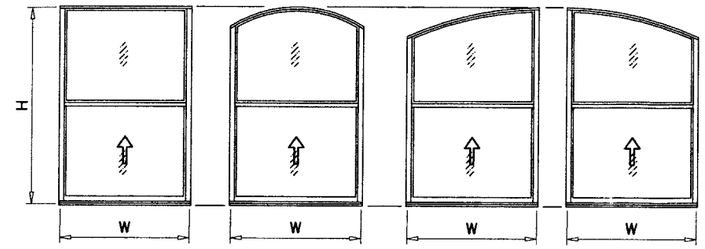

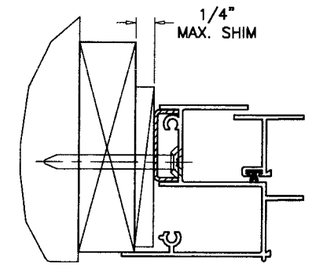

FLANGE FRAME JAMB WITH SHEAR CLIP

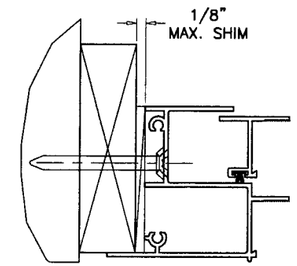

FLANGE FRAME JAMB W/O SHEAR CLIP

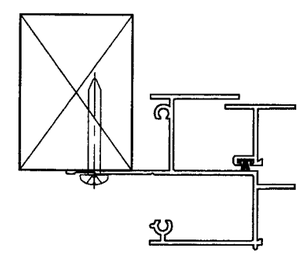

FIN FRAME JAMB

NOTES: FRAME JAMB ANCHOR DETAILS SHOWN IN THIS PAGE ALSO APPLCABLE TO TABLES ON SHEETS 3, 4 AND 5

FLANGE FRAME WINDOWS

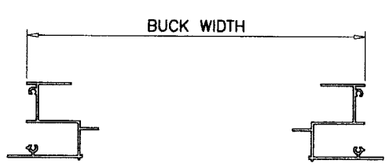

FIN FRAME WINDOWS

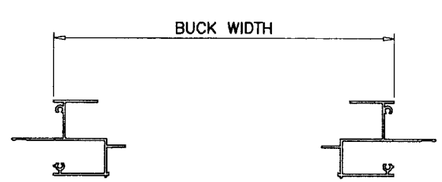

NOTE:
GLASS CAPACITIES ON THIS SHEET ARE BASED ON ASTM E1300–98 (60 SEC. WIND)

FOR M40 XHP (2–1/4" HIGH SILL) USE CHARTS ON SHEET 2 THRU 5 WITHOUT MODIFICATION.
FOR M40 HP (1–3/4" HIGH SILL) LIMIT ALL EXTERIOR (+) LOADS TO +50 PSF
SEE DETAILS ON SHEET 3.

Engr: DR. HUMAYOUN FAROOQ
STRUCTURES
FLA. PE # 16557
C.A.N. 3538

APR 1 1 2006

PRODUCT REVISED
as complying with the Florida Building Code
Acceptance No. 06-0413.06
Expiration Date 04/29/09
By
Miami Dade Product Control Division

AL-FAROOQ CORPORATION
ENGINEERS, PLANNERS & PRODUCT DESIGN
1235 SW 87 AVE
MIAMI, FLORIDA 33174
TEL. (305) 264-8100 FAX. (305) 262-6978
COMP-ANL\W03-110KL

M40 HP & XHP ALUM SINGLE HUNG WDW. (N.I.)

KINCO WINDOWS & DOORS
3600 PORT JACKSONVILLE PARKWAY
JACKSONVILLE, FL 32226
TEL. (904) 355-1476 FAX. (904) 353-0689

revisions:

no	date	by	description
A	03.20.04		CHART REV. PER BCCO COMMENTS
B	04.10.06		DTLS. & HP ADDED

date: 12-05-03
scale: 1/2"=1'-0"
dr. by: HAMID
chk. by:

drawing no.
W03-110

UNEQUAL LITES WINDOWS (ORIEL)
DESIGN LOAD CAPACITY – PSF

BUCK DIMS.		FLANGE OR FIN FRAMES											
		1/8" ANN. GLASS		3/16" ANN. GLASS		1/4" ANN. GLASS		1/8" TEMP. GLASS		3/16" TEMP. GLASS		1/4" TEMP. GLASS	
WIDTH	HEIGHT	EXT.(+)	INT.(−)	EXT.(+)	INT.(−)	EXT.(+)	INT.(−)	EXT.(+)	INT.(−)	EXT.(+)	INT.(−)	EXT.(+)	INT.(−)
18−1/8"	54−7/8" (6)	68.3	73.9	68.3	125.0	68.3	167.0	68.3	210.0	68.3	210.0	68.3	210.0
25−1/2"		60.6	60.6	68.3	100.2	68.3	141.6	68.3	165.5	68.3	165.5	68.3	165.5
36"		45.5	45.5	68.3	72.4	68.3	92.9	68.3	106.2	68.3	117.2	68.3	117.2
52−1/8"		31.3	31.3	48.5	48.5	64.0	64.0	60.9	60.9	68.3	79.2	68.3	81.0
52−1/8"	54−7/8" (8)	X	X	X	X	X	X	X	X	68.3	79.2	68.3	97.5
18−1/8"	62" (6)	61.5	61.5	68.3	125.0	68.3	167.0	68.3	206.1	68.3	206.1	68.3	206.1
25−1/2"		46.2	46.2	68.3	82.4	68.3	115.6	68.3	146.5	68.3	146.5	68.3	146.5
36"		38.6	38.6	61.2	61.2	68.3	76.8	68.3	103.7	68.3	103.7	68.3	103.7
52−1/8"		27.5	27.5	46.3	46.3	55.6	55.6	57.9	57.9	68.3	71.6	68.3	71.6
52−1/8"	62" (8)	X	X	X	X	X	X	X	X	68.3	75.2	68.3	92.6
18−1/8"	71" (6)	54.7	54.7	68.3	125.0	68.3	167.0	68.3	179.9	68.3	179.9	68.3	179.9
25−1/2"		34.5	34.5	66.9	66.9	68.3	95.0	68.3	127.9	68.3	127.9	68.3	127.9
36"		31.8	31.8	51.1	51.1	64.1	64.1	68.3	90.6	68.3	90.6	68.3	90.6
52−1/8"		24.2	24.2	39.8	39.8	48.2	48.2	56.1	56.1	62.6	62.6	62.6	62.6
52−1/8"	71" (8)	X	X	X	X	X	X	X	X	68.3	73.0	68.3	83.4
18−1/8"	77" (6)	52.5	52.5	68.3	125.0	68.3	165.9	68.3	165.9	68.3	165.9	68.3	165.9
25−1/2"		30.9	30.9	60.4	60.4	68.3	85.9	68.3	117.9	68.3	117.9	68.3	117.9
36"		28.0	28.0	43.8	43.8	56.4	56.4	68.3	83.5	68.3	83.5	68.3	83.5
52−1/8"		20.6	20.6	36.0	36.0	44.0	44.0	56.0	56.0	57.7	57.7	57.7	57.7
52−1/8"	77" (8)	X	X	X	X	X	X	X	X	68.3	72.8	68.3	76.9

* NO. IN PARENTHESIS INDICATE NO. OF ANCHORS PER JAMB.

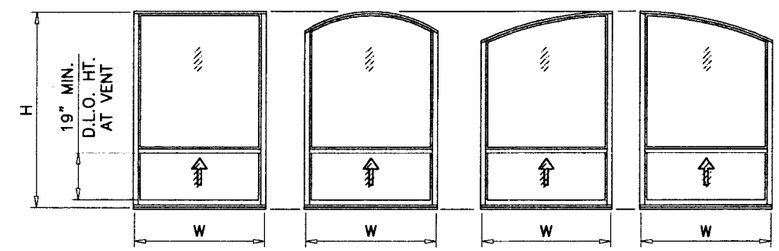

FLANGE FRAME WINDOWS

FIN FRAME WINDOWS

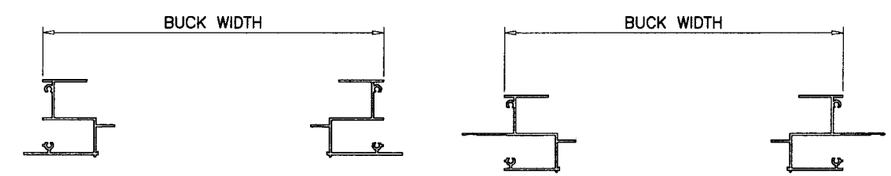

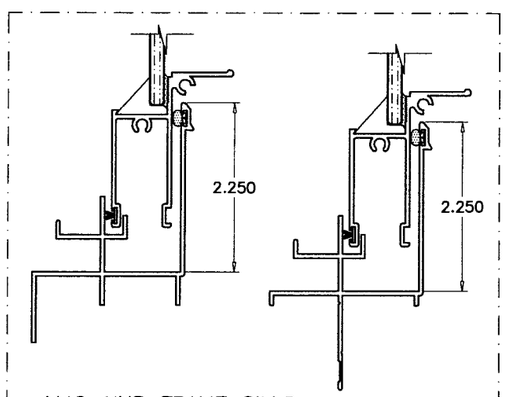

M40−XHP FRAME SILLS
USE CHARTS WITHOUT LIMITATIONS

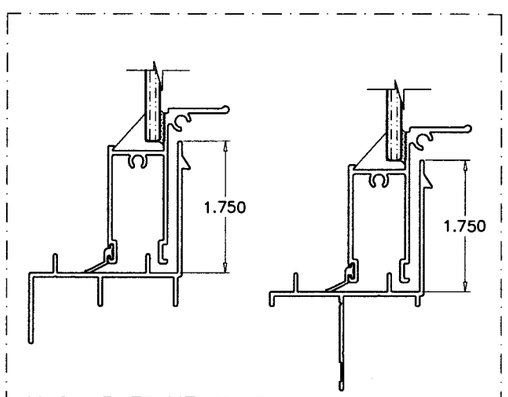

M40−HP FRAME SILLS
LIMIT EXTERIOR(+) LOADS TO +50.0 PSF

APPLIES TO ALL CHARTS ON SHEETS 2 THRU 5.

NOTE:
GLASS CAPACITIES ON THIS SHEET ARE BASED ON ASTM E1300−98 (60 SEC. WIND)

FOR M40 XHP (2−1/4" HIGH SILL) USE CHARTS ON SHEET 2 THRU 5 WITHOUT MODIFICATION.
FOR M40 HP (1−3/4" HIGH SILL) LIMIT ALL EXTERIOR (+) LOADS TO +50 PSF
SEE DETAILS LEFT.

PRODUCT REVISED
as complying with the Florida Building Code
Acceptance No. 06-0413.06
Expiration Date 04/29/09
By
Miami Dade Product Control Division

Engr: DR. HUMAYOUN FAROOQ
STRUCTURES
FLA. PE # 16557
C.A.N. 3538

APR 11 2006

AL−FAROOQ CORPORATION
ENGINEERS, PLANNERS & PRODUCT DESIGN
1235 SW 87 AVE
MIAMI, FLORIDA 33174
TEL. (305) 264−8100 FAX. (305) 262−6978
COMP−ANL\W03−110KL

M40 HP & XHP ALUM SINGLE HUNG WDW. (N.I.)

KINCO WINDOWS & DOORS
3600 PORT JACKSONVILLE PARKWAY
JACKSONVILLE, FL 32226
TEL. (904) 355−1476 FAX. (904) 353−0689

revisions:

no	date	by	description
A	03.20.04		CHART REV. PER BCCO COMMENTS
B	04.10.06		DTLS. & HP ADDED

date: 12−05−03
scale: 1/2"=1'−0"
dr. by: HAMID
chk. by:

drawing no.
W03−110

sheet 3 of 9

EQUAL LITES WINDOWS
DESIGN LOAD CAPACITY - PSF

BUCK DIMS.		FLANGE OR FIN FRAMES											
		1/8" ANN. GLASS		3/16" ANN. GLASS		1/4" ANN. GLASS		1/8" TEMP. GLASS		3/16" TEMP. GLASS		1/4" TEMP. GLASS	
WIDTH	HEIGHT	EXT.(+)	1NT.(−)	EXT.(+)	1NT.(−)	EXT.(+)	1NT.(−)	EXT.(+)	1NT.(−)	EXT.(+)	1NT.(−)	EXT.(+)	1NT.(−)
24"	28" (4)	68.3	78.4	68.3	125.0	68.3	167.0	68.3	210.0	68.3	210.0	68.3	210.0
28"		68.3	78.4	68.3	125.0	68.3	167.0	68.3	196.9	68.3	196.9	68.3	196.9
32"		68.3	78.4	68.3	125.0	68.3	167.0	68.3	172.3	68.3	172.3	68.3	172.3
36"		68.3	78.4	68.3	125.0	68.3	153.1	68.3	153.1	68.3	153.1	68.3	153.1
40"		68.3	78.4	68.3	123.3	68.3	137.8	68.3	137.0	68.3	137.8	68.3	137.8
44"		68.3	78.4	68.3	110.0	68.3	125.3	68.3	122.2	68.3	125.3	68.3	125.3
48"		68.3	78.4	68.3	99.2	68.3	114.9	68.3	110.3	68.3	114.9	68.3	114.9
52"		68.3	78.4	68.3	90.4	68.3	106.0	68.3	100.5	68.3	106.0	68.3	106.0
24"	36" (4)	68.3	78.4	68.3	125.0	68.3	167.0	68.3	178.7	68.3	178.7	68.3	178.7
28"		68.3	78.4	68.3	125.0	68.3	153.1	68.3	153.1	68.3	153.1	68.3	153.1
32"		68.3	76.5	68.3	125.0	68.3	134.0	68.3	134.0	68.3	134.0	68.3	134.0
36"		65.0	65.0	68.3	117.2	68.3	119.1	68.3	119.1	68.3	119.1	68.3	119.1
40"		58.3	58.3	68.3	102.1	68.3	107.2	68.3	107.2	68.3	107.2	68.3	107.2
44"		54.5	54.5	68.3	90.4	68.3	97.5	68.3	97.5	68.3	97.5	68.3	97.5
48"		50.9	50.9	68.3	81.1	68.3	89.3	68.3	89.3	68.3	89.3	68.3	89.3
52"		48.5	48.5	68.3	73.6	68.3	82.5	68.3	81.8	68.3	82.5	68.3	82.5
48"	36" (6)	X	X	X	X	68.3	117.2	X	X	68.3	126.2	68.3	134.0
52"		X	X	X	X	68.3	106.3	X	X	68.3	114.5	68.3	123.7
24"	44" (4)	68.3	78.4	68.3	125.0	68.3	146.2	68.3	146.2	68.3	146.2	68.3	146.2
28"		68.3	76.4	68.3	125.0	68.3	125.3	68.3	125.3	68.3	125.3	68.3	125.3
32"		67.4	67.4	68.3	109.6	68.3	109.6	68.3	109.6	68.3	109.6	68.3	109.6
36"		57.1	57.1	68.3	97.5	68.3	97.5	68.3	97.5	68.3	97.5	68.3	97.5
40"		50.8	50.8	68.3	87.7	68.3	87.7	68.3	87.7	68.3	87.7	68.3	87.7
44"		42.8	42.8	68.3	78.5	68.3	79.7	68.3	79.7	68.3	79.7	68.3	79.7
48"		39.1	39.1	68.3	70.0	68.3	73.1	68.3	73.1	68.3	73.1	68.3	73.1
52"		35.0	35.0	63.1	63.1	67.5	67.5	67.5	67.5	67.5	67.5	67.5	67.5
48"	44" (6)	X	X	X	X	68.3	101.1	X	X	68.3	108.8	68.3	109.6
52"		X	X	X	X	68.3	91.2	X	X	68.3	98.2	68.3	101.2
24"	52" (6)	68.3	76.9	68.3	125.0	68.3	167.0	68.3	185.5	68.3	185.5	68.3	185.5
28"		68.1	68.1	68.3	117.3	68.3	159.0	68.3	159.0	68.3	159.0	68.3	159.0
32"		62.6	62.6	68.3	100.3	68.3	139.2	68.3	128.1	68.3	139.2	68.3	139.2
36"		55.9	55.9	68.3	88.7	68.3	123.7	68.3	105.8	68.3	123.7	68.3	123.7
40"		46.3	46.3	68.3	79.5	68.3	110.0	68.3	90.1	68.3	111.3	68.3	111.3
44"		42.1	42.1	68.3	70.7	68.3	99.0	68.3	78.5	68.3	101.2	68.3	101.2
48"		38.3	38.3	62.6	62.6	68.3	90.1	68.3	69.5	68.3	92.8	68.3	92.8
52"		32.3	32.3	56.2	56.2	68.3	81.1	62.4	62.4	68.3	85.6	68.3	85.6
48"	52" (8)	X	X	X	X	X	X	X	X	68.3	97.4	68.3	111.3
52"		X	X	X	X	X	X	X	X	68.3	87.4	68.3	99.9
24"	60" (6)	67.4	67.4	68.3	120.3	68.3	160.8	68.3	160.8	68.3	160.8	68.3	160.8
28"		63.6	63.6	68.3	99.7	68.3	137.8	68.3	137.8	68.3	137.8	68.3	137.8
32"		55.7	55.7	68.3	87.1	68.3	120.1	68.3	120.6	68.3	120.6	68.3	120.6
36"		48.7	48.7	68.3	78.1	68.3	104.3	68.3	100.5	68.3	107.2	68.3	107.2
40"		44.3	44.3	68.3	70.8	68.3	92.0	68.3	84.4	68.3	96.5	68.3	96.5
44"		40.7	40.7	65.0	65.0	68.3	83.3	68.3	72.7	68.3	87.7	68.3	87.7
48"		36.0	36.0	57.5	57.5	68.3	76.5	63.9	63.9	68.3	80.4	68.3	80.4
52"		33.1	33.1	51.3	51.3	68.3	70.6	57.0	57.0	68.3	74.2	68.3	74.2
48"	60" (8)	X	X	X	X	X	X	X	X	68.3	89.5	68.3	102.3
52"		X	X	X	X	X	X	X	X	68.3	79.8	68.3	91.2
24"	72" (6)	54.0	54.0	68.3	98.6	68.3	134.0	68.3	134.0	68.3	134.0	68.3	134.0
28"		51.5	51.5	68.3	83.6	68.3	114.4	68.3	114.9	68.3	114.9	68.3	114.9
32"		46.5	46.5	68.3	74.3	68.3	96.9	68.3	100.5	68.3	100.5	68.3	100.5
36"		42.8	42.8	67.7	67.7	68.3	85.1	68.3	89.3	68.3	89.3	68.3	89.3
40"		38.7	38.7	61.5	61.5	68.3	76.8	68.3	79.9	68.3	80.4	68.3	80.4
44"		35.1	35.1	56.5	56.5	68.3	70.3	67.6	67.6	68.3	73.1	68.3	73.1
48"		32.4	32.4	52.2	52.2	65.2	65.2	58.6	58.6	67.0	67.0	67.0	67.0
52"		30.0	30.0	46.5	46.5	60.4	60.4	51.7	51.7	61.8	61.8	61.8	61.8
48"	72" (8)	X	X	X	X	X	X	X	X	68.3	82.0	68.3	89.3
52"		X	X	X	X	X	X	X	X	68.3	72.4	68.3	82.5

* NO. IN PARENTHESIS INDICATE NO. OF ANCHORS PER JAMB.

EQUAL LITES WINDOWS
DESIGN LOAD CAPACITY - PSF

BUCK DIMS.		FLANGE OR FIN FRAMES											
		1/8" ANN. GLASS		3/16" ANN. GLASS		1/4" ANN. GLASS		1/8" TEMP. GLASS		3/16" TEMP. GLASS		1/4" TEMP. GLASS	
WIDTH	HEIGHT	EXT.(+)	1NT.(−)	EXT.(+)	1NT.(−)	EXT.(+)	1NT.(−)	EXT.(+)	1NT.(−)	EXT.(+)	1NT.(−)	EXT.(+)	1NT.(−)
24"	77" (6)	50.1	50.1	68.3	91.7	68.3	125.3	68.3	125.3	68.3	125.3	68.3	125.3
28"		48.0	48.0	68.3	78.3	68.3	106.1	68.3	107.4	68.3	107.4	68.3	107.4
32"		43.9	43.9	68.3	69.7	68.3	90.2	68.3	94.0	68.3	94.0	68.3	94.0
36"		40.2	40.2	63.7	63.7	68.3	79.3	68.3	83.5	68.3	83.5	68.3	83.5
40"		36.4	36.4	59.1	59.1	68.3	72.5	68.3	75.2	68.3	75.2	68.3	75.2
44"		33.2	33.2	54.1	54.1	66.8	66.8	66.4	66.4	68.3	68.3	68.3	68.3
48"		30.5	30.5	50.0	50.0	61.6	61.6	57.2	57.2	62.6	62.6	62.6	62.6
52"		28.5	28.5	45.2	45.2	57.6	57.6	50.2	50.2	57.8	57.8	57.8	57.8
48"	77" (8)	X	X	X	X	X	X	X	X	68.3	80.0	68.3	83.5
52"		X	X	X	X	X	X	X	X	68.3	70.3	68.3	77.1

NOTE:
GLASS CAPACITIES ON THIS SHEET ARE
BASED ON ASTM E1300-98 (60 SEC. WIND)

FOR M40 XHP (2-1/4" HIGH SILL) USE CHARTS
ON SHEET 2 THRU 5 WITHOUT MODIFICATION.
FOR M40 HP (1-3/4" HIGH SILL) LIMIT ALL
EXTERIOR (+) LOADS TO +50 PSF
SEE DETAILS ON SHEET 3.

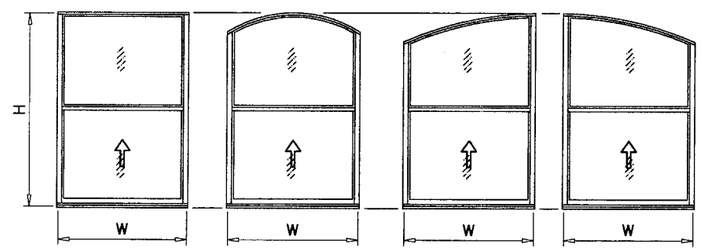

FLANGE FRAME WINDOWS

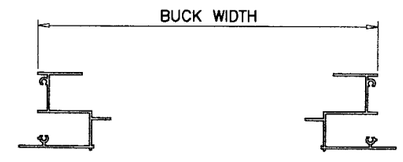

FIN FRAME WINDOWS

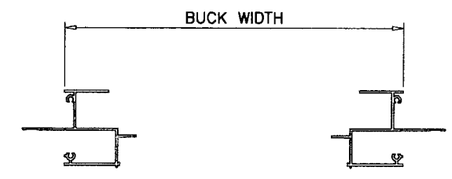

PRODUCT REVISED
as complying with the Florida
Building Code
Acceptance No. 06-0413.06
Expiration Date 04/29/09
By
Miami-Dade Product Control
Division

Engr: DR. HUMAYOUN FAROOQ
STRUCTURES
FLA. PE # 16557
C.A.N. 3538

APR 1 1 2006

AL-FAROOQ CORPORATION
ENGINEERS, PLANNERS & PRODUCT DESIGN
1235 SW 87 AVE
MIAMI, FLORIDA 33174
TEL. (305) 264-8100 FAX. (305) 262-6978
COMP-ANL\W03-110KL

M40 HP & XHP ALUM SINGLE HUNG WDW. (N.I.)

KINCO WINDOWS & DOORS
3600 PORT JACKSONVILLE PARKWAY
JACKSONVILLE, FL 32226
TEL. (904) 355-1476 FAX. (904) 353-0689

revisions:

no	date	by	description
A	03.20.04		CHART REV. PER BCCO COMMENTS
B	04.10.06		HP ADDED

date: 12-05-03
scale: 1/2"=1'-0"
dr. by: HAMID
chk. by:

drawing no.
W03-110

EQUAL LITES WINDOWS
DESIGN LOAD CAPACITY – PSF

BUCK DIMS.		FLANGE OR FIN FRAMES											
		1/8" ANN. GLASS		3/16" ANN. GLASS		1/4" ANN. GLASS		1/8" TEMP. GLASS		3/16" TEMP. GLASS		1/4" TEMP. GLASS	
WIDTH	HEIGHT	EXT.(+)	INT.(−)	EXT.(+)	INT.(−)	EXT.(+)	INT.(−)	EXT.(+)	INT.(−)	EXT.(+)	INT.(−)	EXT.(+)	INT.(−)
24"	52" (6)	67.1	67.1	68.3	119.7	68.3	167.0	68.3	185.5	68.3	185.5	68.3	185.5
28"		63.4	63.4	68.3	99.3	68.3	140.1	68.3	159.0	68.3	159.0	68.3	159.0
32"		55.4	55.4	68.3	86.8	68.3	119.5	68.3	130.4	68.3	139.2	68.3	139.2
36"		48.5	48.5	68.3	77.8	68.3	103.8	68.3	107.4	68.3	123.7	68.3	123.7
40"		44.2	44.2	68.3	70.6	68.3	91.7	68.3	91.3	68.3	111.3	68.3	111.3
44"		40.6	40.6	64.8	64.8	68.3	82.9	68.3	79.4	68.3	101.2	68.3	101.2
48"		35.9	35.9	57.8	57.8	68.3	76.2	68.3	70.2	68.3	92.8	68.3	92.8
52"		33.0	33.0	52.7	52.7	68.3	70.2	62.9	62.9	68.3	85.6	68.3	85.6
40"	52" (8)	X	X	X	X	X	X	68.3	91.3	68.3	127.8	68.3	146.0
44"		X	X	X	X	X	X	68.3	79.4	68.3	111.1	68.3	127.0
48"		X	X	X	X	X	X	68.3	70.2	68.3	98.3	68.3	112.3
52"		X	X	X	X	X	X	62.9	62.9	68.3	88.1	68.3	100.7
24"	60" (6)	50.6	50.6	68.3	92.6	68.3	132.7	68.3	160.8	68.3	160.8	68.3	160.8
28"		48.4	48.4	68.3	79.0	68.3	107.2	68.3	137.8	68.3	137.8	68.3	137.8
32"		44.3	44.3	68.3	70.4	68.3	91.0	68.3	120.6	68.3	120.6	68.3	120.6
36"		40.5	40.5	64.3	64.3	68.3	80.0	68.3	105.8	68.3	107.2	68.3	107.2
40"		36.7	36.7	59.4	59.4	68.3	73.2	68.3	88.3	68.3	96.5	68.3	96.5
44"		33.5	33.5	54.4	54.4	67.3	67.3	68.3	75.6	68.3	87.7	68.3	87.7
48"		30.7	30.7	50.4	50.4	62.1	62.1	66.1	66.1	68.3	80.4	68.3	80.4
52"		28.7	28.7	46.8	46.8	58.0	58.0	58.8	58.8	68.3	74.2	68.3	74.2
40"	60" (8)	X	X	X	X	X	X	68.3	88.3	68.3	123.6	68.3	128.6
44"		X	X	X	X	X	X	68.3	75.6	68.3	105.9	68.3	116.9
48"		X	X	X	X	X	X	66.1	66.1	68.3	92.6	68.3	105.8
52"		X	X	X	X	X	X	58.8	58.8	68.3	82.3	68.3	94.0
24"	72" (6)	35.2	35.2	68.3	71.9	68.3	102.8	68.3	134.0	68.3	134.0	68.3	134.0
28"		35.3	35.3	59.7	59.7	68.3	80.3	68.3	114.9	68.3	114.9	68.3	114.9
32"		33.1	33.1	52.2	52.2	68.3	69.3	68.3	100.5	68.3	100.5	68.3	100.5
36"		31.2	31.2	50.3	50.3	62.8	62.8	68.3	89.3	68.3	89.3	68.3	89.3
40"		28.6	28.6	47.0	47.0	57.9	57.9	68.3	80.4	68.3	80.4	68.3	80.4
44"		26.5	26.5	46.4	46.4	53.5	53.5	68.3	73.1	68.3	73.1	68.3	73.1
48"		25.3	25.3	43.4	43.4	50.6	50.6	64.5	64.5	67.0	67.0	67.0	67.0
52"		23.6	23.6	38.9	38.9	47.8	47.8	56.3	56.3	61.8	61.8	61.8	61.8
40"	72" (8)	X	X	X	X	X	X	68.3	88.2	68.3	107.2	68.3	107.2
44"		X	X	X	X	X	X	68.3	74.8	68.3	97.5	68.3	97.5
48"		X	X	X	X	X	X	64.5	64.5	68.3	89.3	68.3	89.3
52"		X	X	X	X	X	X	56.3	56.3	68.3	78.8	68.3	82.5
24"	77" (6)	31.2	31.2	68.3	68.3	68.3	99.9	68.3	124.8	68.3	125.3	68.3	125.3
28"		29.4	29.4	53.3	53.3	68.3	74.6	68.3	107.4	68.3	107.4	68.3	107.4
32"		29.9	29.9	47.2	47.2	63.2	63.2	68.3	94.0	68.3	94.0	68.3	94.0
36"		28.0	28.0	43.8	43.8	56.4	56.4	68.3	83.5	68.3	83.5	68.3	83.5
40"		26.3	26.3	44.3	44.3	52.9	52.9	68.3	75.2	68.3	75.2	68.3	75.2
44"		24.9	24.9	42.2	42.2	49.2	49.2	68.3	68.3	68.3	68.3	68.3	68.3
48"		23.1	23.1	37.9	37.9	46.6	46.6	62.6	62.6	62.6	62.6	62.6	62.6
52"		20.7	20.7	36.0	36.0	44.1	44.1	56.2	56.2	57.8	57.8	57.8	57.8
40"	77" (8)	X	X	X	X	X	X	68.3	88.2	68.3	100.2	68.3	100.2
44"		X	X	X	X	X	X	68.3	74.8	68.3	91.1	68.3	91.1
48"		X	X	X	X	X	X	64.5	64.5	68.3	83.5	68.3	83.5
52"		X	X	X	X	X	X	56.2	56.2	68.3	77.1	68.3	77.1

* NO. IN PARENTHESIS INDICATE NO. OF ANCHORS PER JAMB.

NOTE:
GLASS CAPACITIES ON THIS SHEET ARE BASED ON ASTM E1300–98 (60 SEC. WIND)

FOR M40 XHP (2–1/4" HIGH SILL) USE CHARTS ON SHEET 2 THRU 5 WITHOUT MODIFICATION.
FOR M40 HP (1–3/4" HIGH SILL) LIMIT ALL EXTERIOR (+) LOADS TO +50 PSF
SEE DETAILS ON SHEET 3.

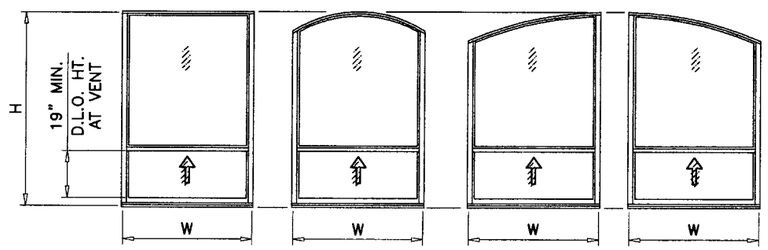

FLANGE FRAME WINDOWS

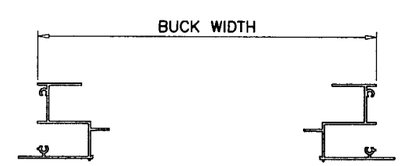

FIN FRAME WINDOWS

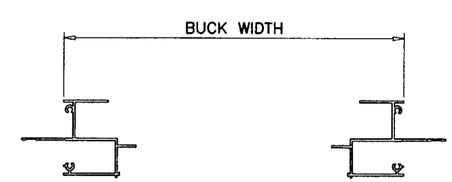

PRODUCT REVISED
as complying with the Florida Building Code
Acceptance No. 06-0413.06
Expiration Date 04/29/09
By
Miami-Dade Product Control Division

Engr: DR. HUMAYOUN FAROOQ
STRUCTURES
FLA. PE # 16557
C.A.N. 3538
APR 11 2006

M40 HP & XHP ALUM SINGLE HUNG WDW. (N.I.)

KINCO WINDOWS & DOORS
3600 PORT JACKSONVILLE PARKWAY
JACKSONVILLE, FL 32226
TEL. (904) 355-1476 FAX. (904) 353-0689

AL-FAROOQ CORPORATION
ENGINEERS, PLANNERS & PRODUCT DESIGN
1235 SW 87 AVE
MIAMI, FLORIDA 33174
TEL. (305) 264-8100 FAX. (305) 262-6978

COMP-ANL\W03-110KL

revisions:

no	date	by	description
A	03.20.04		CHART REV. PER BCCO COMMENTS
B	04.10.06		HP ADDED

date: 12-05-03
scale: 1/2"=1'-0"
dr. by: HAMID
chk. by:

drawing no.
W03-110

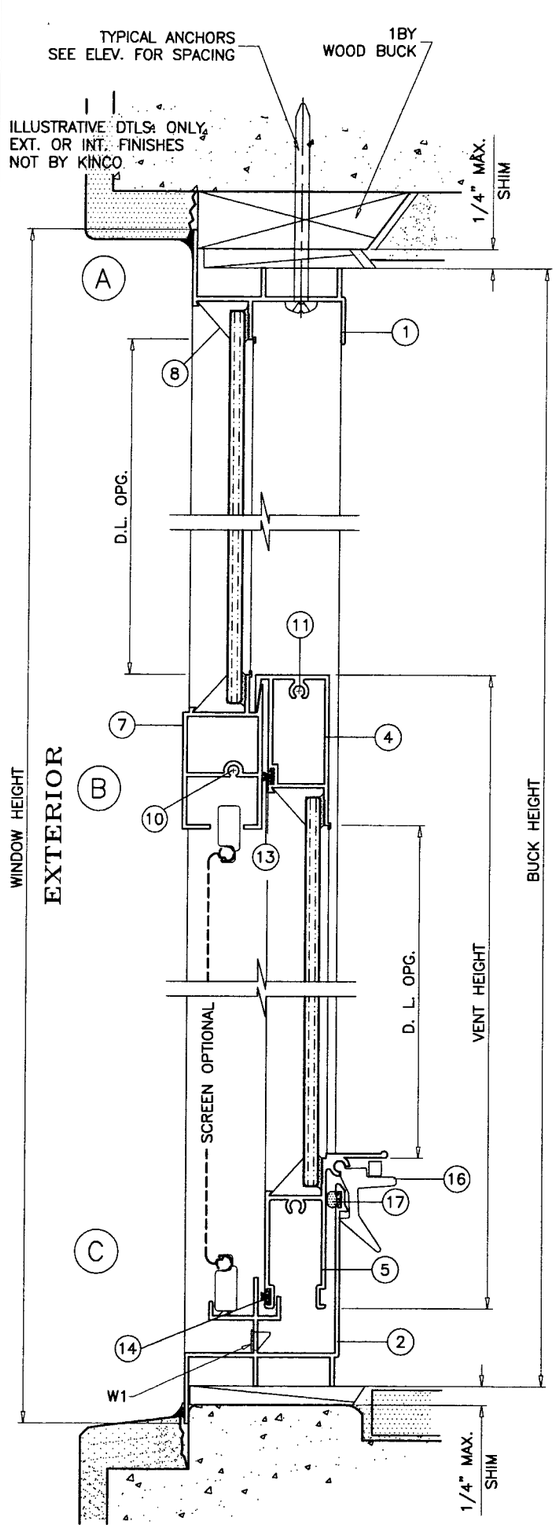

M40-XHP SILL

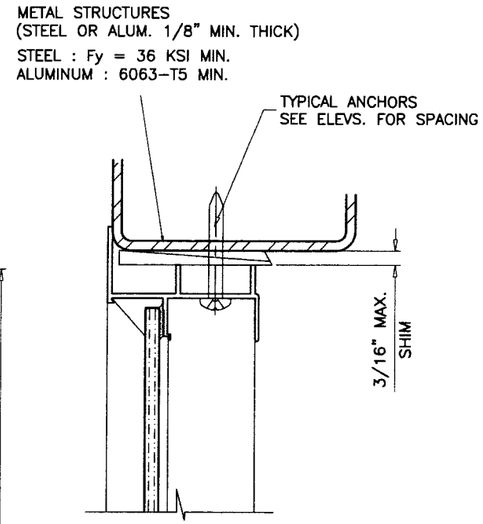

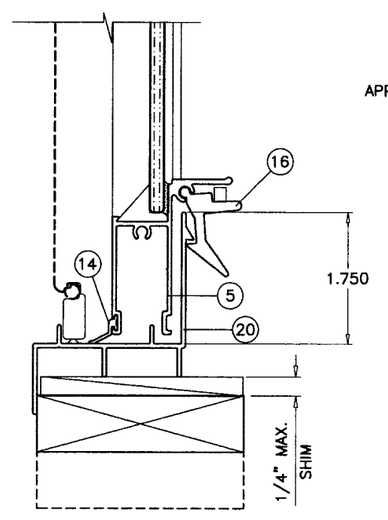

M40-HP SILL

WOOD BUCKS NOT BY KINCO, MUST SUSTAIN LOADS IMPOSED BY GLAZING SYSTEM AND TRANSFER THEM TO THE BUILDING STRUCTURE.

TYPICAL ANCHORS: SEE ELEV. FOR SPACING

1/4" TAPCONS

INTO 2BY WOOD BUCKS OR WOOD STRUCTURE
1-1/4" MIN. PENETRATION INTO WOOD

THRU 1BY BUCKS INTO MASONRY OR DIRECTLY INTO MASONRY
1-1/4" MIN. EMBED INTO CONC. OR MASONRY

#12 TEKS OR SELF DRILLING SCREWS

INTO METAL STRUCTURES (1/8" MIN. THICKNESS)
(3/16" MAX. SHIM SPACE)

#10 SMS OR SELF DRILLING SCREWS

INTO DADE COUNTY APPROVED MULLIONS
(NO SHIM SPACE)

WEEPHOLES:

W1 = 1" X 1/4" WEEP HOLE WITH PLASTIC BAFFLE
AT 5" FROM EACH END

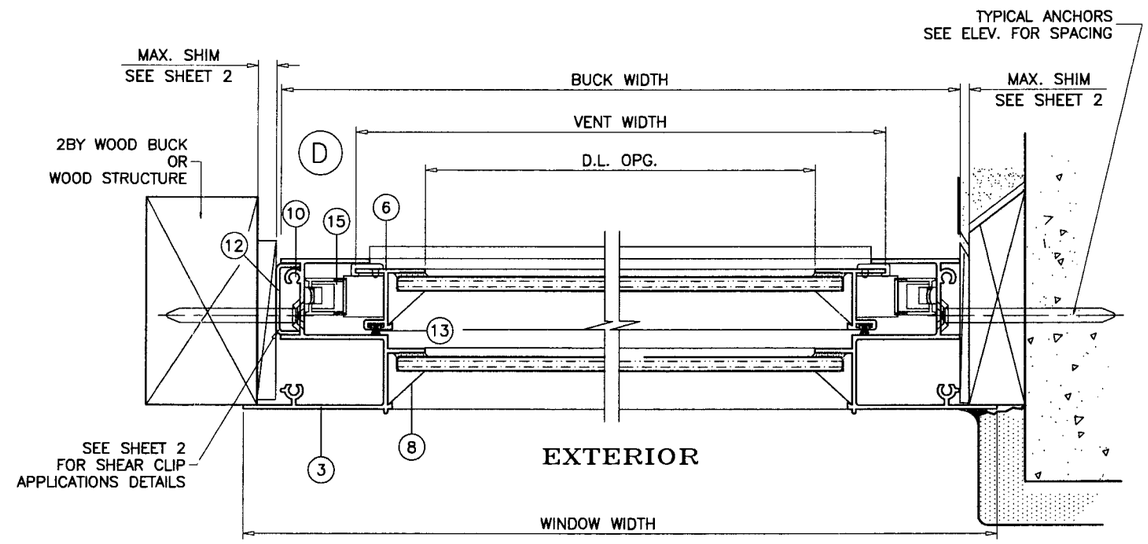

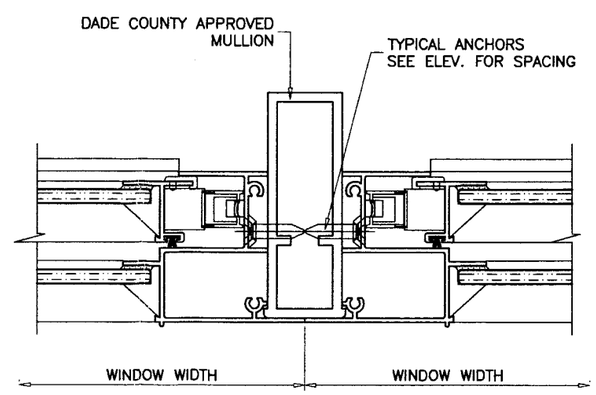

FLANGE FRAME WINDOW

Engr: DR. HUMAYOUN FAROOQ
STRUCTURES
FLA. PE # 16557
C.A.N. 3538

APR 1 1 2006

PRODUCT REVISED
In complying with the Florida Building Code
Acceptance No. 06-0413.06
Expiration Date 04/29/09
By
Miami-Dade Product Control Division

AL-FAROOQ CORPORATION
ENGINEERS, PLANNERS & PRODUCT DESIGN
1235 SW 87 AVE
MIAMI, FLORIDA 33174
TEL. (305) 264-8100 FAX. (305) 262-6978
COMP-ANL\W03-110KL

M40 HP & XHP ALUM SINGLE HUNG WDW. (N.I.)

KINCO WINDOWS & DOORS
3600 PORT JACKSONVILLE PARKWAY
JACKSONVILLE, FL 32226
TEL. (904) 355-1476 FAX. (904) 353-0689

revisions:

no	date	by	description
A	03.20.04		ANCHOR REV. PER BCCO COMMENTS
B	04.10.06		HP DTLS ADDED

date: 12-05-03
scale: 1/2" = 1"
dr. by: HAMID
chk. by:

drawing no.
W03-110

WOOD STRUCTURE NOT BY KINCO, MUST SUSTAIN LOADS IMPOSED BY GLAZING SYSTEM AND TRANSFER THEM TO THE BUILDING STRUCTURE.

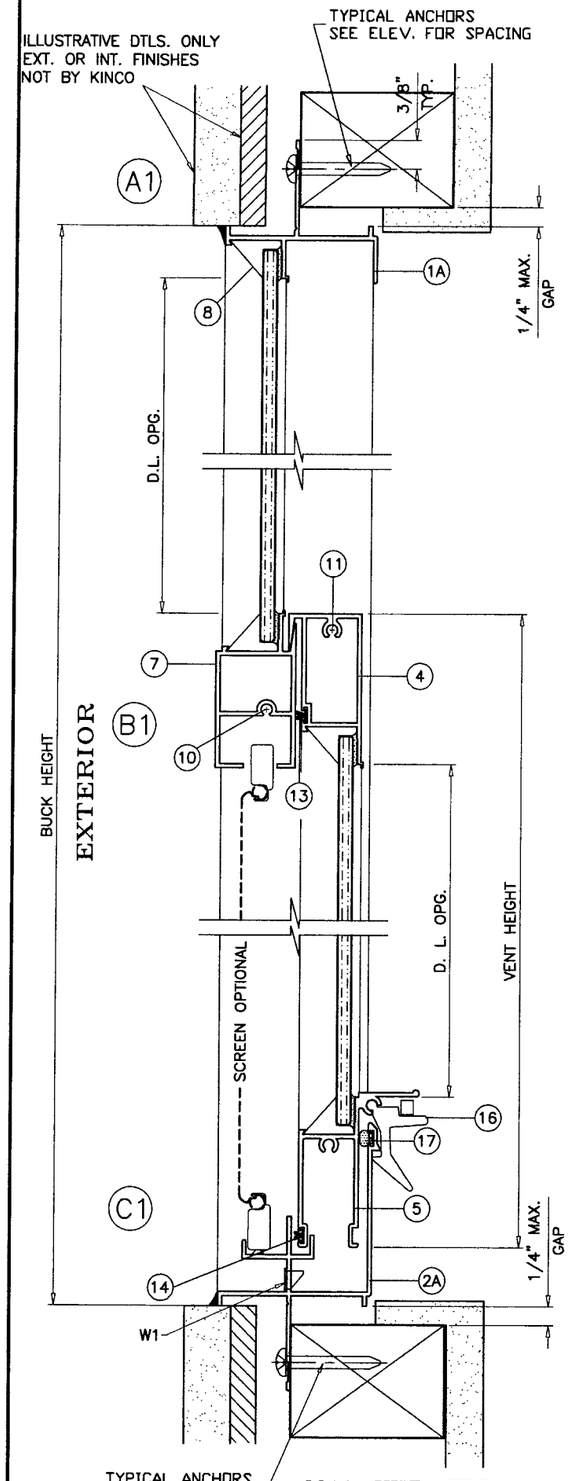

M40-XHP SILL

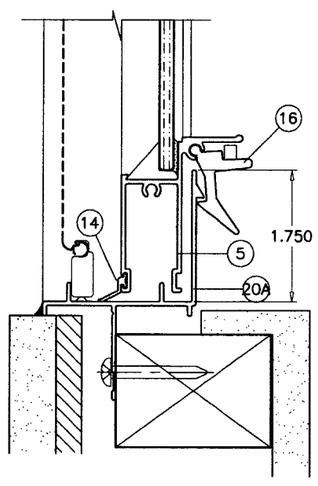

M40-HP SILL

TYPICAL ANCHORS: SEE ELEV. FOR SPACING

#10 SMS

INTO WOOD STRUCTURES
1-1/4" MIN. PENETRATION INTO WOOD

#10 SMS OR SELF DRILLING SCREWS

INTO DADE COUNTY APPROVED MULLIONS
(NO SHIM SPACE)

WEEPHOLES:

W1 = 1" X 1/4" WEEP HOLE WITH PLASTIC BAFFLE
AT 5" FROM EACH END

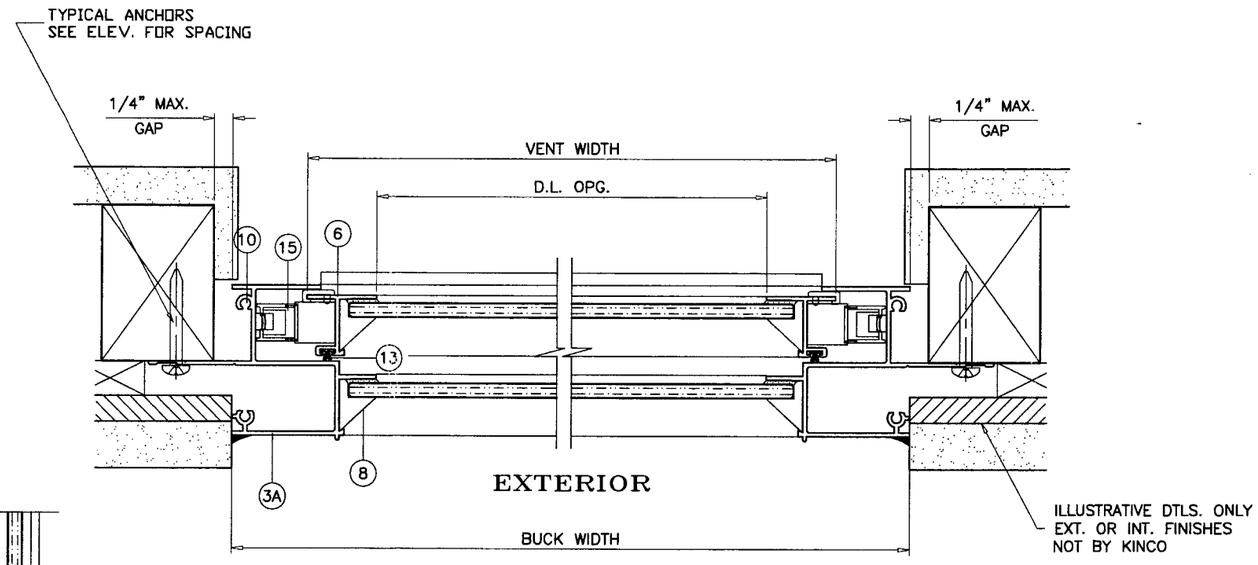

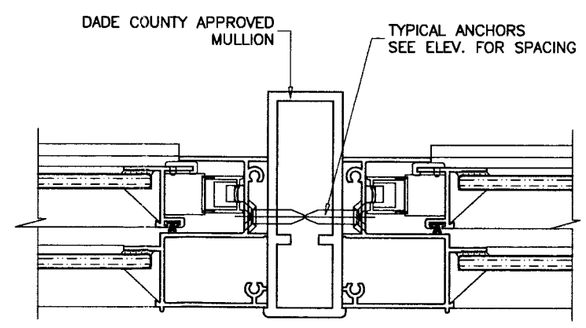

FIN FRAME WINDOW

Engr: DR. HUMAYOUN FAROOQ
STRUCTURES
FLA. PE # 16557
C.A.N. 3538

APR 11 2006

PRODUCT REVISED
as complying with the Florida
Building Code
Acceptance No. 04-0413.06
Expiration Date 04/29/09
By
Miami-Dade Product Control
Division

AL-FAROOQ CORPORATION
ENGINEERS, PLANNERS & PRODUCT DESIGN
1235 SW 87 AVE
MIAMI, FLORIDA 33174
TEL. (305) 264-8100 FAX. (305) 262-6978
COMP-ANL\W03-110KL

M40 HP & XHP ALUM SINGLE HUNG WDW. (N.I.)

KINCO WINDOWS & DOORS
3600 PORT JACKSONVILLE PARKWAY
JACKSONVILLE, FL 32226
TEL. (904) 355-1476 FAX. (904) 353-0689

revisions:

no	date	by	description
A	03.20.04		NO CHANGE THIS SHEET
B	04.10.06		HP DTLS ADDED

date: 12-05-03
scale: 1/2" = 1"
dr. by: HAMID
chk. by:

drawing no.
W03-110

sheet 7 of 9

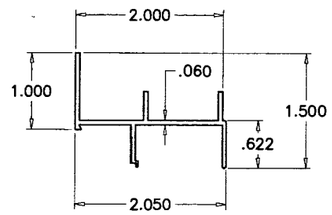

1 FRAME HEAD (FLANGE)

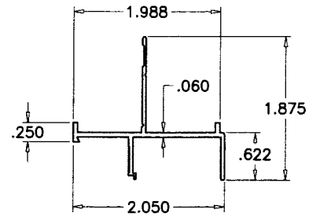

1A FRAME HEAD (FIN)

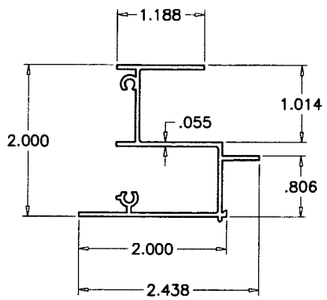

3 FRAME JAMB (FLANGE)

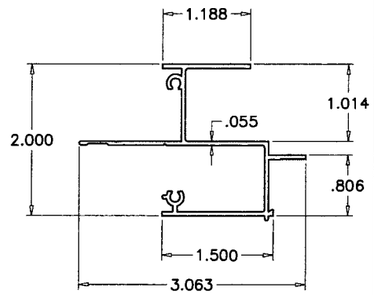

3A FRAME JAMB (FIN)

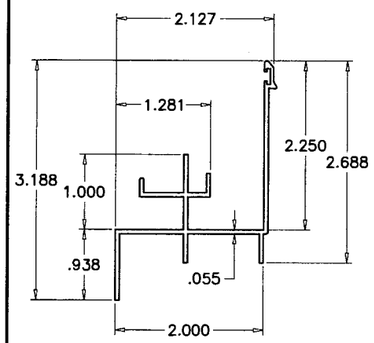

2 FRAME SILL (FLANGE) M40 XHP

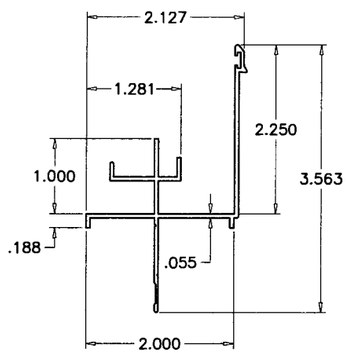

2A FRAME SILL (FIN) (M40 XHP

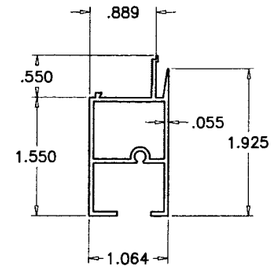

7 FIXED MEETING RAIL

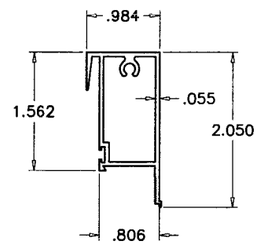

4 VENT TOP RAIL

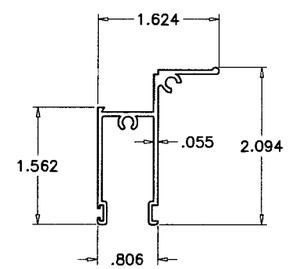

5 VENT BOTTOM RAIL

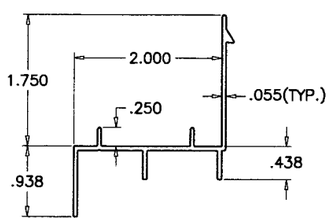

20 FRAME SILL (FLANGE) M40-HP

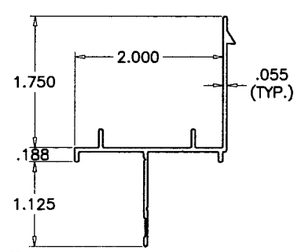

20A FRAME SILL (FIN) M40-HP

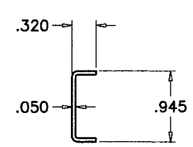

12 SHEAR CLIP

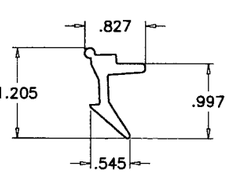

16 LATCH

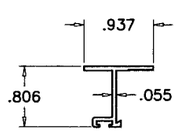

6 VENT SIDE RAIL

ITEM NO.	PART NO.	QUANTITY	DESCRIPTION	MATERIAL	MANF./SUPPLIER/REMARKS
1	KCO-107	1	FRAME HEAD (FLANGE)	6063-T6	–
1A	KCO-101	1	FRAME HEAD (FIN)	6063-T6	–
2	KCO-293	1	FRAME SILL (FLANGE) M40 XHP	6063-T6	–
2A	KCO-294	1	FRAME SILL (FIN) M40 XHP	6063-T6	–
3	KCO-263	2	FRAME JAMB (FLANGE)	6063-T6	–
3A	KCO-259	2	FRAME JAMB (FIN)	6063-T5	–
4	KCO-268	1	VENT TOP RAIL	6063-T6	–
5	KCO-269	1	VENT BOTTOM RAIL	6063-T6	–
6	KCO-262	2	VENT SIDE RAIL	6063-T6	–
7	KCO-267	1	FIXED MEETING RAIL	6063-T6	–
8	05-023	4/ LITE	GLAZING BEAD	ALUMINUM	–
9	5731	AS REQD.	GLAZING COMPOUND	SILICONE	SCHNEE-MOREHEAD
10	–	AS REQD.	FRAME ASSEMBLY SCREW	–	#8 X 5/8" PHPH SMS
11	–	AS REQD.	VENT ASSEMBLY SCREW	–	#8 X 5/8" PHPH SMS
12	KCO-400	AS REQD.	SHEAR CLIP	6063-T6	–
13	–	AS REQD.	FIN SEAL WEATHERSTRIPPING	–	ULTRAFAB .210X.187 OR EQUIV.
14	–	AS REQD.	VINYL WEATHERSTRIPPING	PVC	–
15	–	2	BLOCK AND TACKLE BALANCE	–	CALDWELL
16	L-049	2/ VENT	SNAP LATCH 3" LONG W/ SPRING	NYLON	9" FROM EACH END (HUGHES SUPPLY)
17	U-4333	AS REQD.	BULB WEATHERSTRIPPING		Q-LON .300X.190
18	L-045	2	VENT TOP GUIDE	NYLON	ASHLAND PRODUCTS
19	L-046	2	VENT BOTTOM GUIDE	NYLON	ASHLAND PRODUCTS
20	KCO-266	1	FRAME SILL (FLANGE) M40 HP	6063-T6	–
20A	KCO-265	1	FRAME SILL (FIN) M40 HP	6063-T6	–

Engr: DR. HUMAYOUN FAROOQ
STRUCTURES
FLA. PE # 16557
C.A.N. 3538

APR 1 1 2006

PRODUCT REVISED
as complying with the Florida Building Code
Acceptance No 06-0413.06
Expiration Date 04/29/09
By
Miami Dade Product Control Division

AL-FAROOQ CORPORATION
ENGINEERS, PLANNERS & PRODUCT DESIGN
1235 SW 87 AVE
MIAMI, FLORIDA 33174
TEL. (305) 264-8100 FAX. (305) 262-6978
COMP-ANL\W03-110KL

M40 HP & XHP ALUM SINGLE HUNG WDW. (N.I.)

KINCO WINDOWS & DOORS
3600 PORT JACKSONVILLE PARKWAY
JACKSONVILLE, FL 32226
TEL. (904) 355-1476 FAX. (904) 353-0689

revisions:

no	date	by	description
A	03.20.04		NO CHANGE THIS SHEET
B	04.10.06		HP DTLS ADDED

date: 12-05-03
scale: 1/2" = 1"
dr. by: HAMID
chk. by:

drawing no.
W03-110

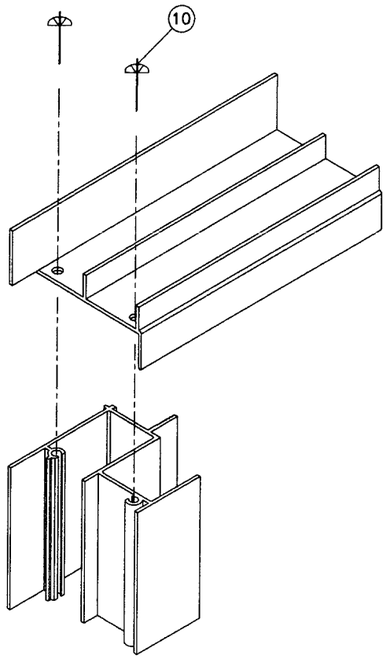

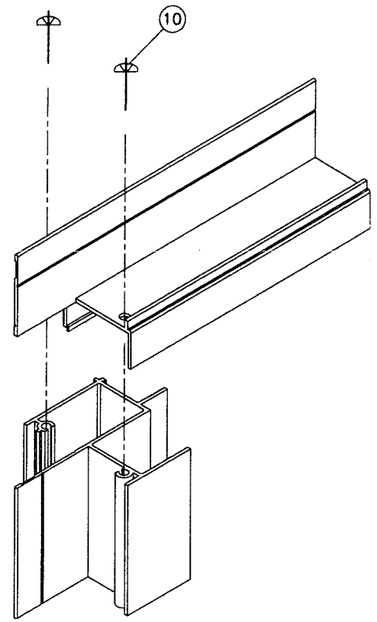

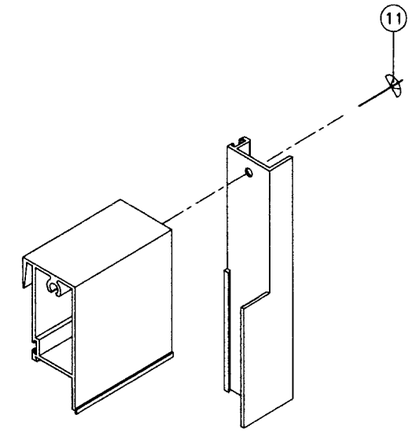

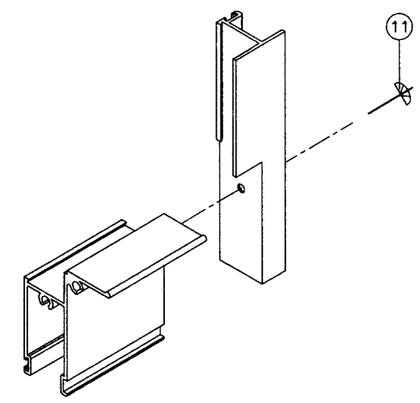

VENT CORNER DETAIL

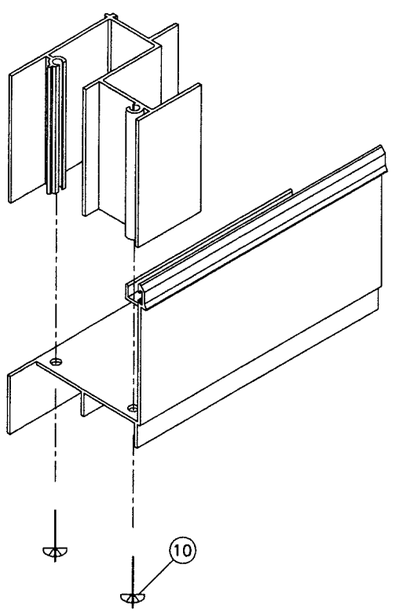

FRAME CORNERS (FLANGE)

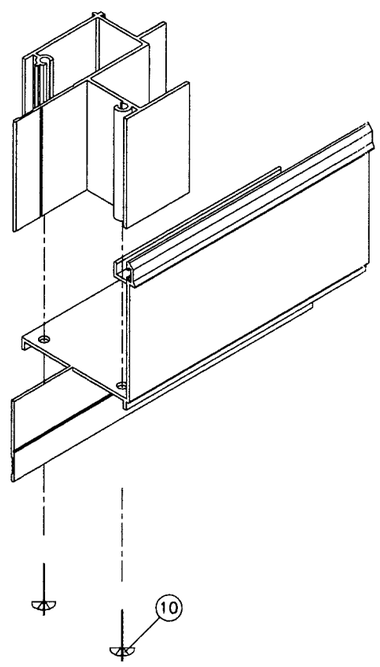

FRAME CORNERS (FIN)

Engr: DR. HUMAYOUN FAROOQ
STRUCTURES
FLA. PE # 16557
C.A.N. 3538

APR 11 2006

PRODUCT REVISED
as complying with the Florida
Building Code
Acceptance No. 08-0413.06
Expiration Date 04/29/09
By
Miami Dade Product Control
Division

AL-FAROOQ CORPORATION
ENGINEERS, PLANNERS & PRODUCT DESIGN
1235 SW 87 AVE
MIAMI, FLORIDA 33174
TEL. (305) 264-8100 FAX. (305) 262-6978
COMP-ANL\W03-110KL

M40 HP & XHP ALUM SINGLE HUNG WDW. (N.I.)

KINCO WINDOWS & DOORS
3600 PORT JACKSONVILLE PARKWAY
JACKSONVILLE, FL 32226
TEL. (904) 355-1476 FAX. (904) 353-0689

revisions:

no	date	by	description
A	03.20.04		NO CHANGE THIS SHEET
B	04.10.06		NO CHANGE THIS SHEET

date: 12-05-03
scale: 1/2" = 1"
dr. by: HAMID
chk. by:

drawing no.
W03-110

sheet 9 of 9