MIAMI-DADE

BUILDING CODE COMPLIANCE OFFICE (BCCO)
PRODUCT CONTROL DIVISION

MIAMI-DADE COUNTY, FLORIDA
METRO-DADE FLAGLER BUILDING
140 WEST FLAGLER STREET, SUITE 1603
MIAMI, FLORIDA 33130-1563
(305) 375-2901 FAX (305) 375-2908

NOTICE OF ACCEPTANCE (NOA)

Custom-Bilt Metals
13940 Magnolia Avenue
Chino, CA. 91710

SCOPE:

This NOA is being issued under the applicable rules and regulations governing the use of construction materials. The documentation submitted has been reviewed by Miami-Dade County Product Control Division and accepted by the Board of Rules and Appeals (BORA) to be used in Miami Dade County and other areas where allowed by the Authority Having Jurisdiction (AHJ).

This NOA shall not be valid after the expiration date stated below. The Miami-Dade County Product Control Division (In Miami Dade County) and/or the AHJ (in areas other than Miami Dade County) reserve the right to have this product or material tested for quality assurance purposes. If this product or material fails to perform in the accepted manner, the manufacturer will incur the expense of such testing and the AHJ may immediately revoke, modify, or suspend the use of such product or material within their jurisdiction. BORA reserves the right to revoke this acceptance, if it is determined by Miami-Dade County Product Control Division that this product or material fails to meet the requirements of the applicable building code.

This product is approved as described herein, and has been designed to comply with the Florida Building Code, including the High Velocity Hurricane Zone.

DESCRIPTION: Vail Metal Shingle, Vail Titan Select & Vail Majestic Copper

LABELING: Each unit shall bear a permanent label with the manufacturer's name or logo, city, state and following statement: "Miami-Dade County Product Control Approved", unless otherwise noted herein.

RENEWAL of this NOA shall be considered after a renewal application has been filed and there has been no change in the applicable building code negatively affecting the performance of this product.

TERMINATION of this NOA will occur after the expiration date or if there has been a revision or change in the materials, use, and/or manufacture of the product or process. Misuse of this NOA as an endorsement of any product, for sales, advertising or any other purposes shall automatically terminate this NOA. Failure to comply with any section of this NOA shall be cause for termination and removal of NOA.

ADVERTISEMENT: The NOA number preceded by the words Miami-Dade County, Florida, and followed by the expiration date may be displayed in advertising literature. If any portion of the NOA is displayed, then it shall be done in its entirety.

INSPECTION: A copy of this entire NOA shall be provided to the user by the manufacturer or its distributors and shall be available for inspection at the job site at the request of the Building Official.

This new NOA consists of pages 1 through 6.
The submitted documentation was reviewed by Alex Tigera.

ROOFING SYSTEM APPROVAL

Category:	Roofing
Sub-Category:	Non-Structural Metal Panel
Material:	Copper, Steel
Maximum Design Pressure:	**-67.5 psf.**

TRADE NAMES OF PRODUCTS MANUFACTURED OR LABELED BY APPLICANT

Product	Dimensions	Product Description
Vail Majestic Copper	34" long x 12" wide	16oz. Copper (with or without aged bronze finish) metal shingle.
Vail Titan Select	34" long x 12" wide Min. thickness 0.0217	Kynar 500 coated Galvalume metal shingle available in 25 colors.
Trim Pieces	Various	End wall, drip edge, valley, sidewall, rake edge, and interlocking hip and ridge trip pieces for use with the Riva Select or Riva Classic metal shingle systems.

EVIDENCE SUBMITTED:

Test Agency/Identifier	Name	Report	Date
Underwriters Laboratories, Inc.	TAS 107		
	TAS-125	05CA17407	11/28/05
	TAS-125	05CA17407	11/29/05
Center for Applied Engineering	TAS 100		
Exterior Research & Design, LLC.	TAS 102	#9106.08097-1	08/15/97

SYSTEM A-1S:	Vail Titan Select Shingle
Deck Type:	Wood, Non-insulated
Deck Description:	New Construction or Re-roof $^{19}/_{32}$" or greater plywood or wood plank.
Slope Range:	2":12" or greater
Maximum Uplift Pressure:	The maximum allowable design pressure for the panel shall be **-58 psf (See System Limitation # 2)**

Deck Attachment:	In accordance with applicable building code, but in no case shall it be less using minimum #8 x 1 ¾ " wood screws or annular ring shank nails at a spacing of 6" o.c. at supports. In re-roofing, where the deck is less than $^{19}/_{32}$" thick (Minimum $^{15}/_{32}$") The above attachment method must be in addition to existing attachment.
Underlayment:	Minimum underlayment shall be an ASTM D 226 Type II installed with a minimum 4" side-lap and 6" end-laps. Underlayment shall be fastened with corrosion resistant tin-caps and 12 gauge 1-¼" annular ring-shank nails, spaced 6" o.c. at all laps and two staggered rows 12" o.c. in the field of the roll. Or, any approved underlayment having a current NOA.
Fire Barrier:	Any approved fire barrier having a current NOA. Or for class A or B fire rating, install minimum ¼" thick Georgia Pacific "Dens Deck" (with current NOA) or minimum 4mm thick of Tritex, RockRoof (with current NOA) or $^{5}/_{8}$" water resistant type X gypsum sheathing with treated core and facer.
Valleys:	Valley construction shall be in compliance with Miami-Dade County Roofing Application Standard RAS 133 and with Vail Metal Systems current published installation instructions.
Metal Panels and Accessories:	Install Riva Select metal shingles including flashing penetrations, valleys end laps and accessories in compliance with Vail Metal Systems, LLC current, published installation instructions and in compliance with the minimum requirements detailed in Roofing Application Standard RAS 133. Clips Shall be attached to substrate with one corrosion resistant roofing nail of sufficient length to penetrate through the sheathing a minimum of $^{3}/_{16}$".

SYSTEM A-1C:	Vail Majestic Copper Shingle
Deck Type:	Wood, Non-insulated
Deck Description:	New Construction or Re-roof $^{19}/_{32}$" or greater plywood or wood plank.
Maximum Uplift Pressure:	**See Fastening Options Below**

Deck Attachment:	In accordance with applicable building code, but in no case shall it be less using minimum #8 x 1 ¾" wood screws or annular ring shank nails at a spacing of 6" o.c. at supports. In re-roofing, where the deck is less than $^{19}/_{32}$" thick (Minimum $^{15}/_{32}$") the above attachment method must be in addition to existing attachment.
Underlayment:	Minimum underlayment shall be an ASTM D 226 Type II installed with a minimum 4" side-lap and 6" end-laps. Underlayment shall be fastened with corrosion resistant tin-caps and 12 gauge 1-¼" annular ring-shank nails, spaced 6" o.c. at all laps and two staggered rows 12" o.c. in the field of the roll. Or, any approved underlayment having a current NOA.
Fire Barrier:	Any approved fire barrier having a current NOA. Or for class A or B fire rating, install minimum ¼" thick Georgia Pacific "Dens Deck" (with current NOA) or minimum 4mm thick of Tritex, RockRoof (with current NOA) or $^{5}/_{8}$" water resistant type X gypsum sheathing with treated core and facer.
Valleys:	Valley construction shall be in compliance with Roofing Application Standard RAS 133 and with current published installation instruction and details in Dura-Loc Roofing System Limited current published installation instructions.
Metal Panels and Accessories:	Install Riva Classic copper shingles including flashing, penetrations, valleys, end laps and accessories in compliance with Vail Metal Systems current, published installation instructions and in compliance with the minimum requirements detailed in Roofing Application Standard RAS 133.
Field Condition Fastening:	Clips shall be attached to substrate with one corrosion resistant roofing nail of sufficient length to penetrate through the sheathing a minimum of $^{3}/_{16}$".
Maximum Design Pressure:	**-56 psf (See General Limitation #2)**
Perimeter and Corner Condition Fastening:	Clips shall be attached to substrate with one #10 x 1 stainless steel screw of sufficient length to penetrate through the sheathing a minimum of $^{3}/_{16}$".
Maximum Design Pressure:	**-67.5 psf (See General Limitation #2)**

SYSTEM LIMITATIONS

1. Fire classification is not part of this acceptance; refer to a current Approved Roofing Materials Directory for fire ratings of this product.

2. The maximum designed pressure listed herein shall be applicable to all roof pressure zones (i.e. field, perimeters, and corners). Neither rational analysis, nor extrapolation shall be permitted for enhanced fastening at enhanced pressure zones (i.e. perimeters, extended corners and corners).

3. All panels shall be permanently labeled with the manufacturer's name and/or logo, and the following statement: "Miami-Dade County Product Control Approved.

4. All products listed herein shall have a quality assurance audit in accordance with the Florida Building Code and Rule 9B-72 of the Florida Administrative Code.

VAIL TITAN SELECT METAL SHINGLES

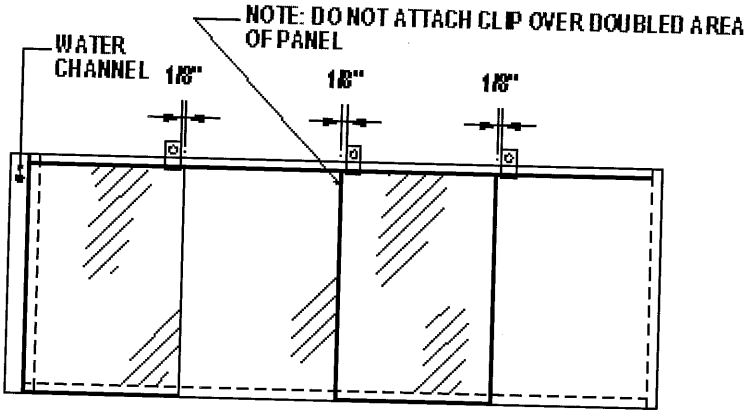

VAIL MAJESTIC COPPER SHINGLES

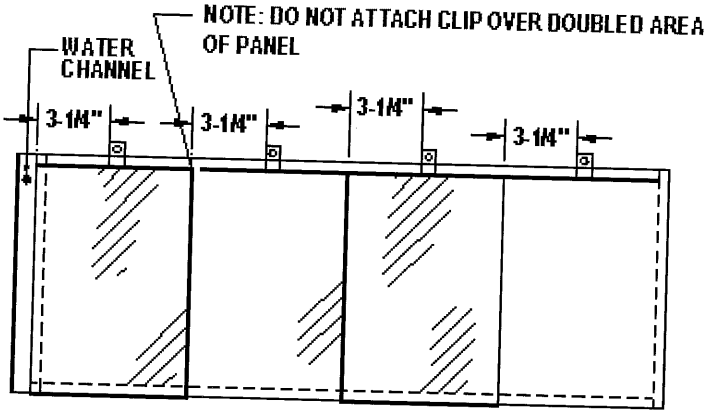

END OF THIS ACCEPTANCE