MIAMI-DADE COUNTY, FLORIDA
METRO-DADE FLAGLER BUILDING
140 WEST FLAGLER STREET, SUITE 1603
MIAMI, FLORIDA 33130-1563
(305) 375-2901 FAX (305) 375-2908
www.buildingcodeonline.com

BUILDING CODE COMPLIANCE OFFICE (BCCO)
PRODUCT CONTROL DIVISION

NOTICE OF ACCEPTANCE (NOA)

Bilt Best Windows and Patio Doors
175 S. Tenth Street
St. Genevieve, MO 63670

SCOPE:

This NOA is being issued under the applicable rules and regulations governing the use of construction materials. The documentation submitted has been reviewed by Miami-Dade County Product Control Division and accepted by the Board of Rules and Appeals (BORA) to be used in Miami Dade County and other areas where allowed by the Authority Having Jurisdiction (AHJ).

This NOA shall not be valid after the expiration date stated below. The Miami-Dade County Product Control Division (In Miami Dade County) and/or the AHJ (in areas other than Miami Dade County) reserve the right to have this product or material tested for quality assurance purposes. If this product or material fails to perform in the accepted manner, the manufacturer will incur the expense of such testing and the AHJ may immediately revoke, modify, or suspend the use of such product or material within their jurisdiction. BORA reserves the right to revoke this acceptance, if it is determined by Miami-Dade County Product Control Division that this product or material fails to meet the requirements of the applicable building code.

This product is approved as described herein, and has been designed to comply with the Florida Building Code, including the High Velocity Hurricane Zone.

DESCRIPTION: Series E-Clad Maxima Insulated Aluminum Clad Wood Fixed Window-LMI

APPROVAL DOCUMENT: Drawing No. **06-091,** titled "E-Clad Maxima Insulated Impact Aluminum Clad Wood Fixed Window", sheets 1 through 3 of 3, dated 03/15/06, prepared by EngloCo Inc., signed and sealed by Pedro De Figueiredo, P.E., bearing the Miami-Dade County Product Control Approval stamp with the Notice of Acceptance number and approval date by the Miami-Dade County Product Control Division.

MISSILE IMPACT RATING: Large and Small Missile Impact Resistant

LABELING: Each unit shall bear a permanent label with the manufacturer's name or logo, city, state and following statement: "Miami-Dade County Product Control Approved", unless otherwise noted herein.

RENEWAL of this NOA shall be considered after a renewal application has been filed and there has been no change in the applicable building code negatively affecting the performance of this product.

TERMINATION of this NOA will occur after the expiration date or if there has been a revision or change in the materials, use, and/or manufacture of the product or process. Misuse of this NOA as an endorsement of any product, for sales, advertising or any other purposes shall automatically terminate this NOA. Failure to comply with any section of this NOA shall be cause for termination and removal of NOA.

ADVERTISEMENT: The NOA number preceded by the words Miami-Dade County, Florida, and followed by the expiration date may be displayed in advertising literature. If any portion of the NOA is displayed, then it shall be done in its entirety.

INSPECTION: A copy of this entire NOA shall be provided to the user by the manufacturer or its distributors and shall be available for inspection at the job site at the request of the Building Official.

This NOA consists of this page 1 and evidence pages E-1, as well as approval document mentioned above.

The submitted documentation was reviewed by **Jaime D. Gascon, P.E.**

PRODUCT CONTROL ACCEPTED

J. Gascon
12/21/06

NOA No 06-0418.08
Expiration Date: January 11, 2012
Approval Date: January 11, 2007

Bilt Best Windows and Patio Doors

NOTICE OF ACCEPTANCE: EVIDENCE SUBMITTED

A. DRAWINGS

1. Manufacturers die drawings and sections.
2. Drawing No. **06-091,** titled "E-Clad Maxima Insulated Impact Aluminum Clad Wood Fixed Window", sheets 1 through 3 of 3, dated 03/15/06, prepared by EngloCo Inc., signed and sealed by Pedro De Figueiredo, P.E.

B. TESTS

1. Test reports on 1) Air Infiltration Test, per FBC, TAS 202-94.
   2) Uniform Static Air Pressure Test, Loading per FBC, TAS202-94.
   3) Water Resistance Test, per FBC, TAS 202-94.
   4) Large Missile Impact Test, per FBC, TAS 201-94.
   5) Cyclic Wind Pressure Loading Test, per FBC, TAS 203-94

   along with marked-up drawings and installation diagram of aluminum clad wood fixed window , prepared by Architectural Testing, Test Report No. 61496.01-201-18, dated from 12/20/05, signed and Joseph A. Reed, P.E.

C. CALCULATIONS

1. Anchor Calculation and Structural analysis, prepared by Engco, Inc., dated 03/16/06, signed and sealed by Pedro De Figueiredo, P.E.
   Complies with ASTM E1300-02

D. QUALITY ASSURANCE

1. Miami Dade Building Code Compliance Office (BCCO).

E. MATERIAL CERTIFICATIONS

1. Notice of Acceptance No.01-1204.01, issued to E.I. DuPont DeNemours for "Sentry Glass ® Plus" dated 01/17/02, expiring on 01/14/07.

F. STATEMENTS

1. Statement letter of conformance and no financial interest, dated 04/19/06, signed and sealed by Pedro De Figueiredo, P.E

G. OTHER

1. Letter from the consultant stating that the product is in compliance with the Florida Building Code (FBC).

Jaime D. Gascon, P.E.
Chief, Product Control Division
NOA No 06-0418.08
Expiration Date: January 11, 2012
Approval Date: January 11, 2007

GENERAL NOTES:

1- DEFINITION: THIS PRODUCT IS AN ALUMINUM CLAD WOOD FIXED WINDOW DESIGNED, CONSTRUCTED AND ERECTED TO ENCLOSE AN AREA, PROVIDING PROTECTION FROM HURRICANE FORCE WINDS AND WIND BORNE DEBRIS WITHIN THE ALLOWABLE DESIGNED PRESSURES AND LIMITATIONS STATED IN THIS APPROVAL.

2- CODE: THIS PRODUCT HAS BEEN TESTED (TAS201, TAS202 AND TAS203) AND DESIGNED IN ACCORDANCE WITH THE 2004 FLORIDA BUILDING CODE (2005 SUPPLEMENT). PRODUCT IS ACCEPTABLE FOR USE IN WIND-BORNE DEBRIS REGIONS INCLUDING THE HIGH VELOCITY HURRICANE ZONE (HVHZ).

3- POSTING: A PERMANENT LEGIBLE DECAL SHALL BE PLACED AT A READILY VISIBLE LOCATION STATING THE FOLLOWING:

'BUILTBEST WINDOWS AND PATIO DOORS
STE. GENEVIEVE - MISSOURI
LARGE MISSILE IMPACT RESISTANT
E-CLAD MAXIMA FIXED - DADE COUNTY APPROVED'

4- LOADS: DESIGNED LOADS ARE TO BE BASED ON THE ASCE 7. LOADS SHALL BE PROVIDED BY A PROFESSIONAL ARCHITECT OR ENGINEER FOR EACH SPECIFIC PROJECT. THE CALCULATED DESIGNED PRESSURE MUST NOT EXCEED THE ALLOWABLE DESIGNED PRESSURE RATING STATED IN THIS APPROVAL.

5- MATERIAL: ALL WOOD MATERIAL TO BE FABRICATED FROM CLEAR PONDEROSA PINE AND ALL ALUMINUM MATERIAL TO BE 6063-T5 ALLOY.

6- FASTENERS: ASSEMBLY SCREWS AND ANCHORS SHALL BE AS SPECIFIED IN THE CURRENT SET OF DRAWINGS, INSTALLATION AND LOADS AS PER THIS APPROVAL.

7- USE: IT SHALL BE THE RESPONSIBILITY OF THE CONTRACTOR, ARCHITECT OR ENGINEER OF RECORD TO VERIFY THE FOLLOWING:

7.1- THE STABILITY OF THE STRUCTURE WHERE THE SHUTTER IS TO BE ATTACHED INSURING PROPER ANCHORAGE.

7.2- THE SITE SPECIFIC PROJECT CRITERIA, SUCH AS BUT NOT LIMITED TO, WIND LOADS, LOCAL CODE REQUIREMENTS, DESIGNED PRESSURES ETC.

7.3- THAT THIS APPROVAL IS ADEQUATE TO THE SPECIFIC PROJECT.

DESIGNED PRESSURE RATING
Pd= ± 50 PSF

TYPICAL ELEVATION

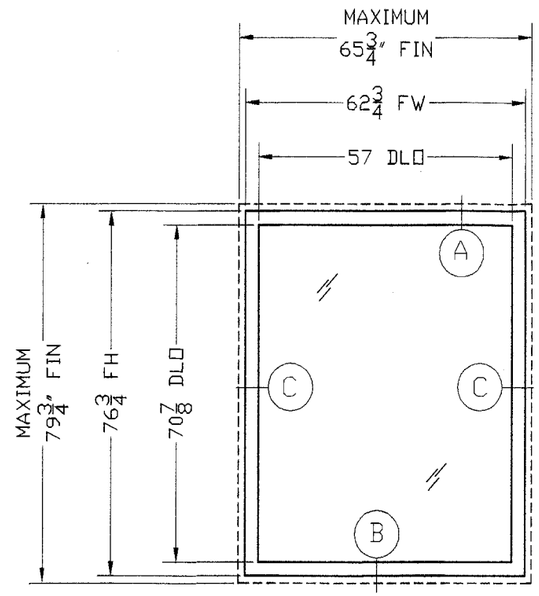

ANCHOR LAY-OUT

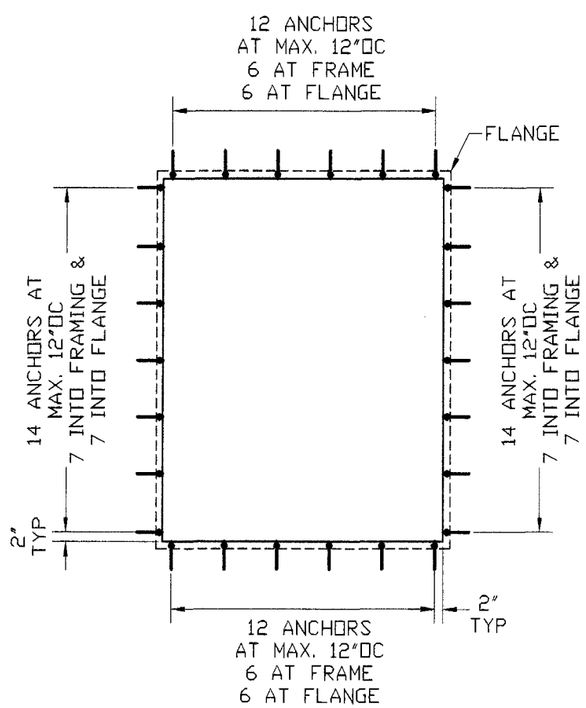

BILL OF MATERIAL

Quantity	Unit	Description
1	Ea	Head Extrusion
1	Ea	Sill Extrusion
2	Ea	Jamb Extrusion
1	Ea	Wood Head
1	Ea	Wood Sill
2	Ea	Wood Jamb
4	Ea	Polycarbonate Corner Key
8	Ea	#10x1/2 SS Screw
16	Ea	#8x3" FHD Screw
3	Ea	1 1/2" 4d Trim Nail
6	Ea	#6x1/2" SS PFHD Screw
as needed	ft	Extruded Nail Fin
2	Ea	Wood Rail
2	Ea	Wood Stile
2	Ea	Wood Rail Glazing Stop
2	Ea	Wood Stile Glazing Stop
1	Ea	1" Insulated AN SGP lami. Impact Glass
as needed	In	Glazing Tape
as needed	Oz	Structural Silicone Dow #995
as needed	Ea	#6x1 5/8" Trim Screw

SASH & FRAMING COMPONENTS DETAILS

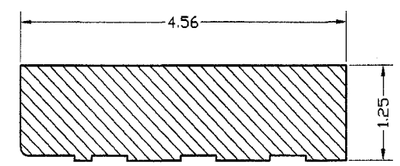

1- 1.25" x 4.562" SOLID PINE JAMB, HEADER & SILL WINDOW FRAMING PROFILE

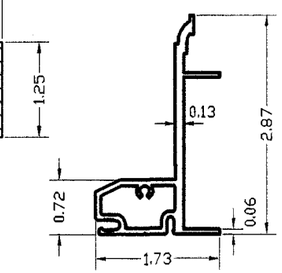

4- 1.73" x 2.87" 6063-T6 CLAD JAMB, HEADER & SILL WINDOW FRAMING CLADDING

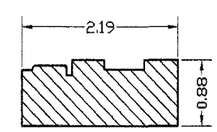

2- 2.19" x 0.88" SOLID PINE FIXED RAIL & STILE WINDOW SASH PROFILE

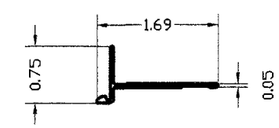

5- .75" x 1.69" 6063-T6 FIN FRAMING NAIL FIN

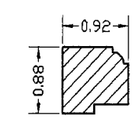

3- .88" x .92" SOLID PINE INTERIOR GLAZING STOP

FRAME ASSEMBLY:
MITERED CORNERS WITH FOUR (4) 3" DECK SCREWS IN EACH CORNER.

CLAD TO FRAME: STAPLE WITH 16 GA X 7/16" X 5/8" STAPLE SPACED A NOMINAL 12" ON CENTER.

NAIL FIN TO FRAME: ATTACH WITH # 6 X 1/2" PAN HEAD SCREWS SPACED A NOMINAL 16" ON CENTER.

MANUFACTURER:
BuiltBest
Windows & Patio Doors
175 S. TENTH STREET
STE. GENEVIEVE, MO 63670
Tel.: (573) 883-3571
Fax.: (573) 883-8393

PRODUCT:
E-CLAD MAXIMA
INSULATED IMPACT ALUMINUM CLAD WOOD FIXED WINDOW

Engineering:
EngCo Inc.
CA 8116
6971 W. Sunrise Blvd. 104
Plantation, Fl. 33313
Tel.: (954) 585-0304
Fax: (954) 585-0305

NOV 0 1 2006

Pedro De Figueiredo, PE
PE 52609

DRAFTING:
PK DRAFTING & MORE

Date: 03/15/06
Scale: NA
Design by: PPMF

PRODUCT CONTROL DIVISION:

Approved as complying with the Florida Building Code
Date 01/11/07
NOA# 06-0418.03
Miami-Dade Product Control Division
By

Drawing Number
06-091

INSTALLATION INTO WOOD

HORIZONTAL SECTION

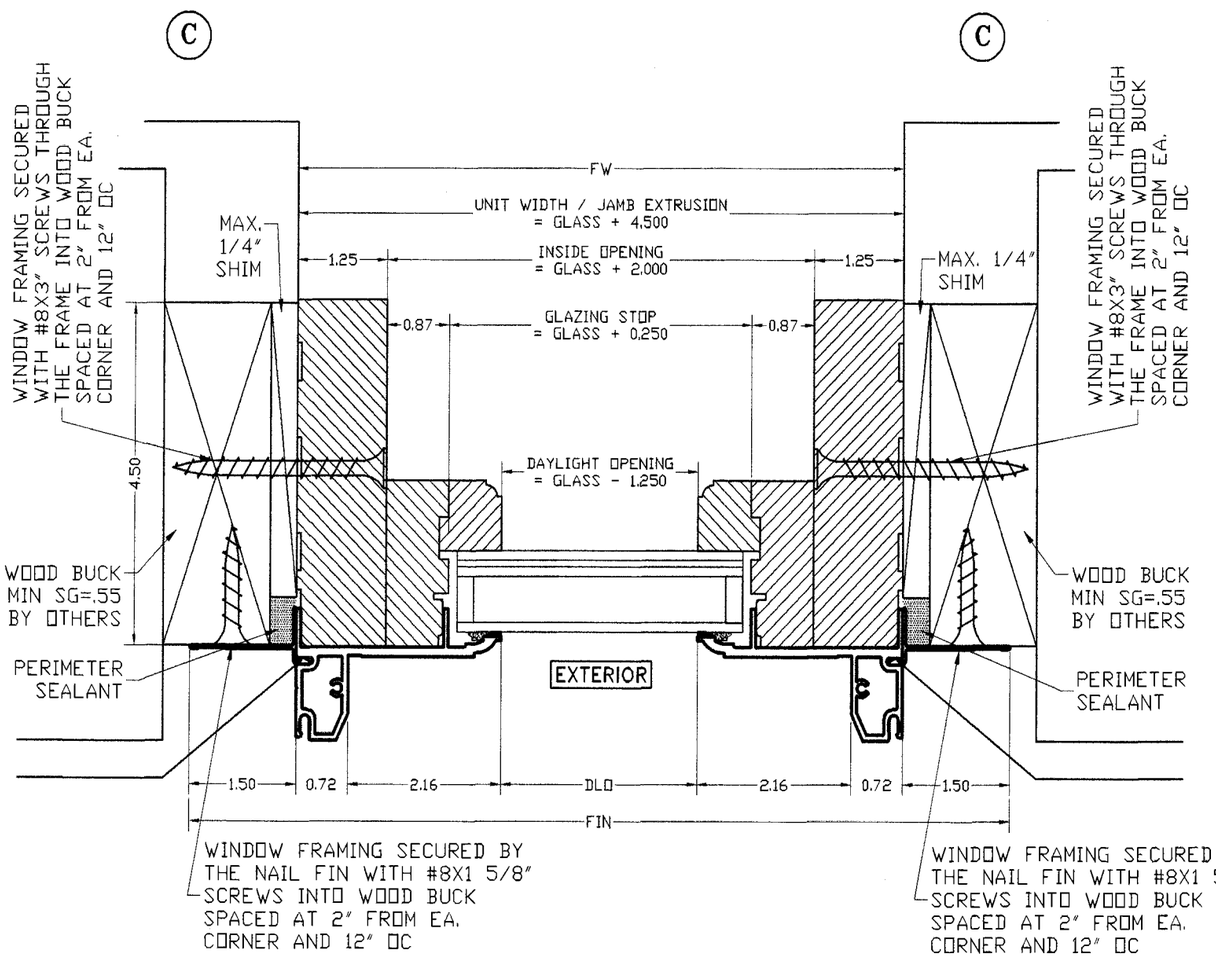

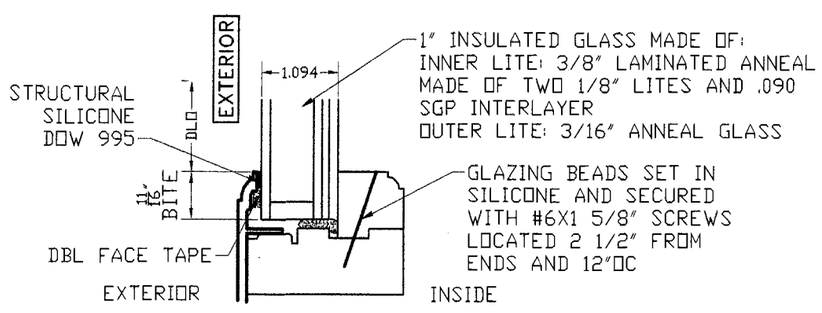

VERTICAL SECTION

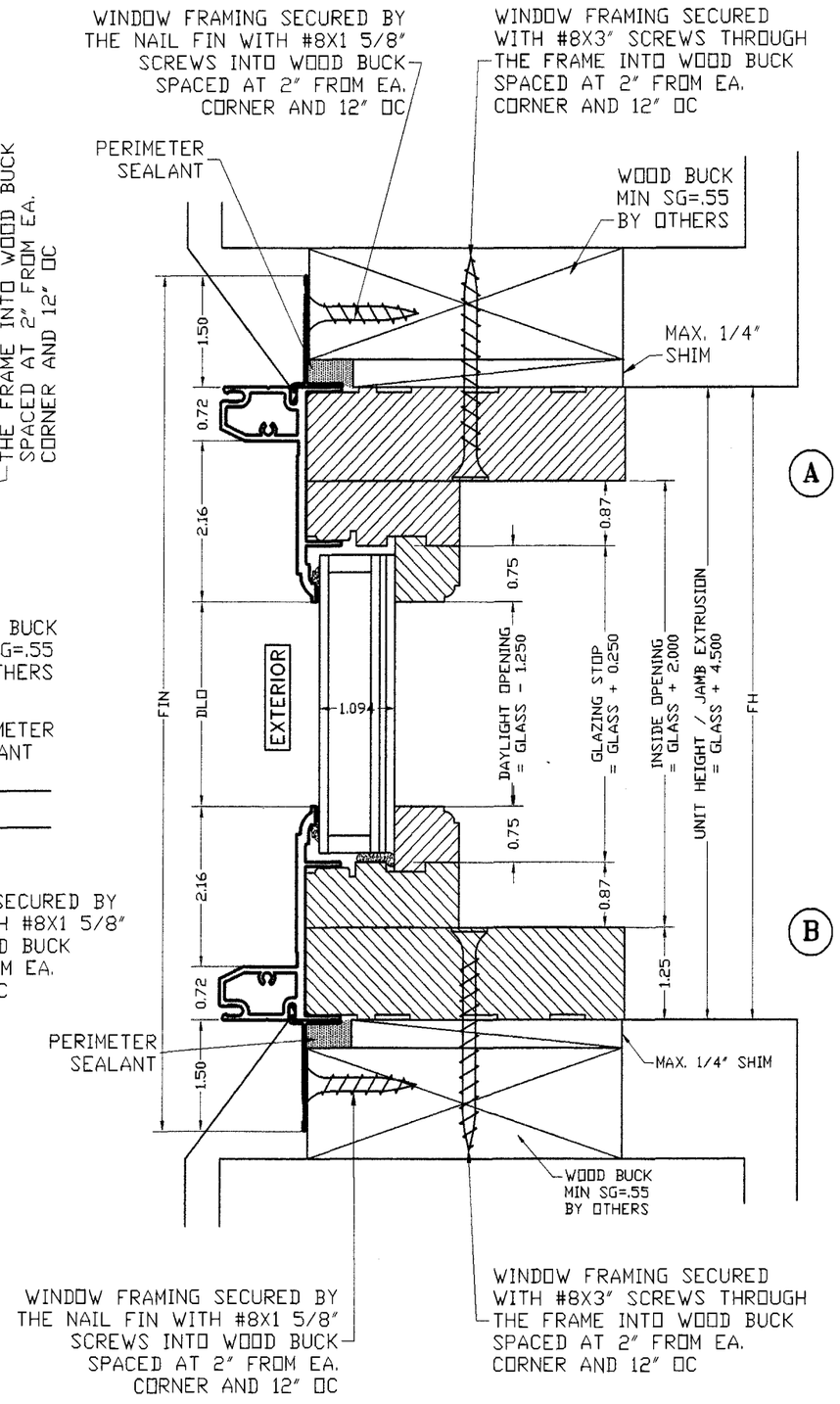

MANUFACTURER:
BuiltBest
Windows & Patio Doors
175 S. TENTH STREET
STE. GENEVIEVE, MO 63670
Tel.: (573) 883-3571
Fax.: (573) 883-8393

PRODUCT:
E-CLAD MAXIMA
INSULATED IMPACT ALUMINUM CLAD WOOD FIXED WINDOW

Engineering:
EngCo Inc.
CA 8116
6971 W. Sunrise Blvd. 104
Plantation, Fl. 33313
Tel.: (954) 585-0304
Fax: (954) 585-0305

NOV 0 1 2006

Pedro De Figueiredo, PE
PE 52609

DRAFTING:
PK DRAFTING & MORE

Date: 03/15/06
Scale: NA
Design by: PPMF

PRODUCT CONTROL DIVISION:
Approved as complying with the Florida Building Code
Date 06/11/07
NOA# 06-0918.08
Miami Dade Product Control Division
By

Drawing Number
06-091

INSTALLATION INTO METAL

HORIZONTAL SECTION

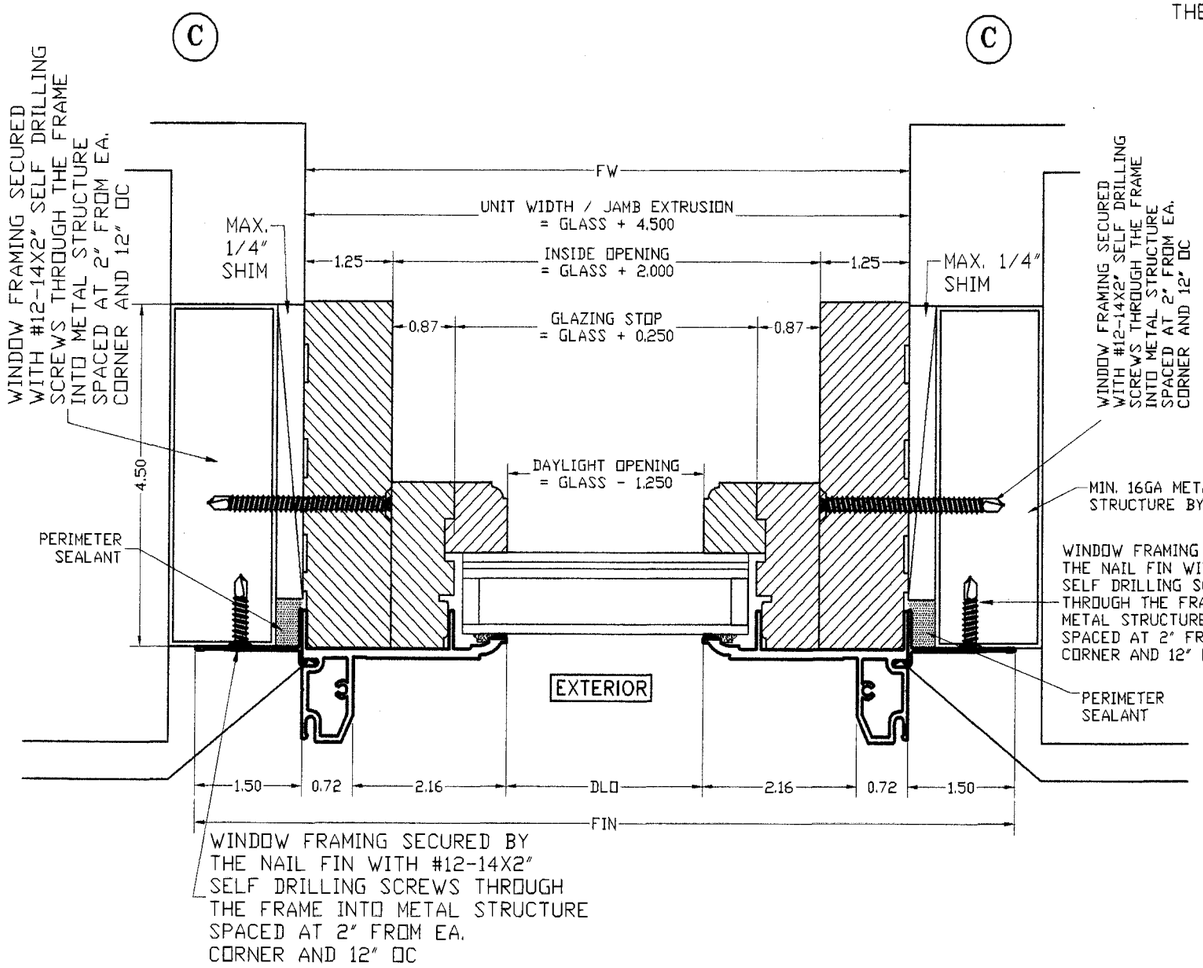

VERTICAL SECTION

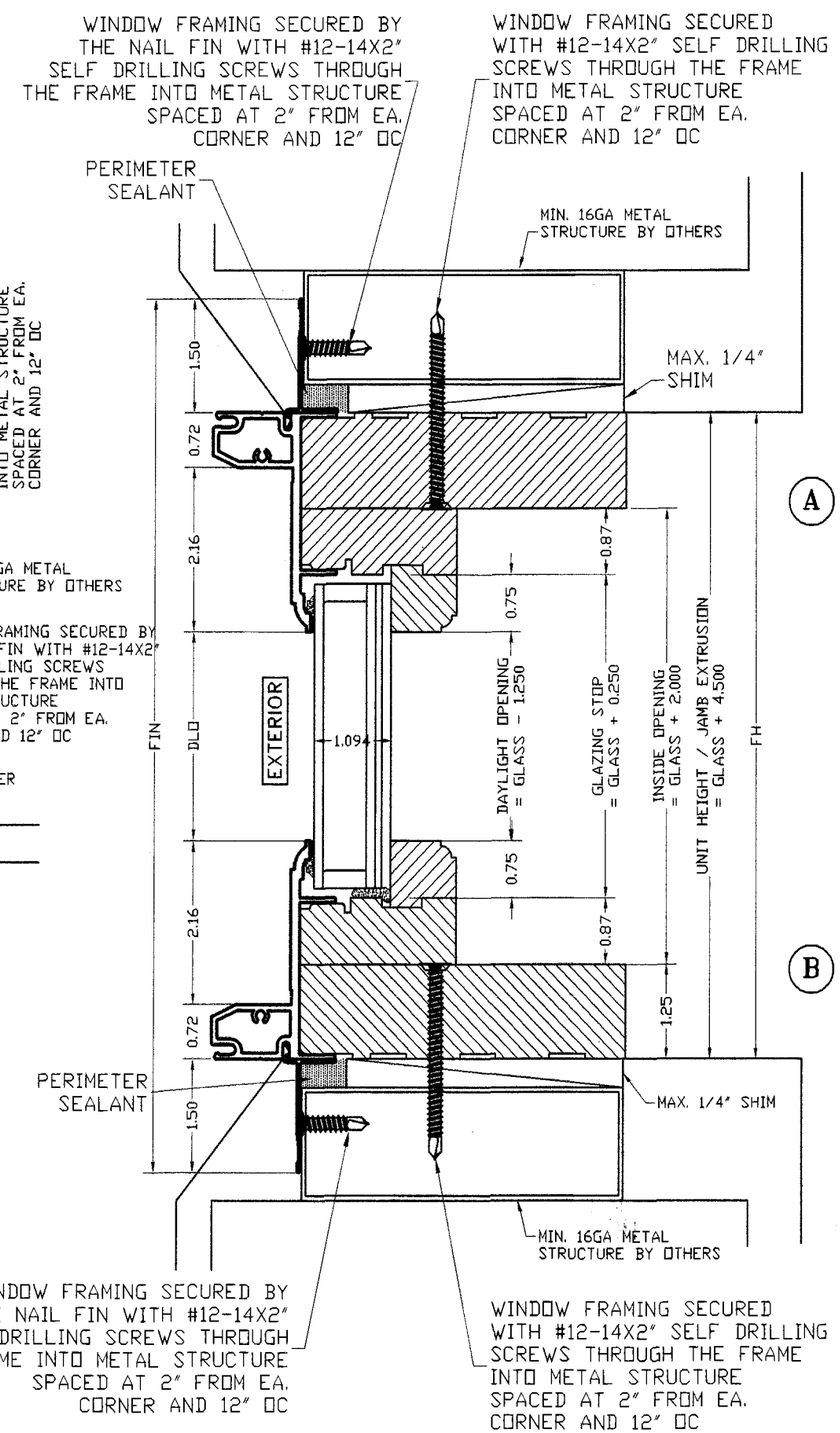

MANUFACTURER:
BuiltBest
Windows & Patio Doors
175 S. TENTH STREET
STE. GENEVIEVE, MO 63670
Tel.: (573) 883-3571
Fax.: (573) 883-8393

PRODUCT:
E-CLAD MAXIMA
INSULATED IMPACT ALUMINUM CLAD WOOD FIXED WINDOW

Engineering:
EngCo Inc.
CA 8116
6971 W. Sunrise Blvd. 104
Plantation, Fl. 33313
Tel.: (954) 585-0304
Fax: (954) 585-0305

NOV 0 1 2006

Pedro De Figueiredo, PE
PE 52609

DRAFTING:
PK DRAFTING & MORE

Date: 03/15/06
Scale: NA
Design by: PPMF

PRODUCT CONTROL DIVISION:

Approved as complying with the Florida Building Code
Date 01/11/07
NOA# 06-0918.05
Miami-Dade Product Control Division
By

Drawing Number
06-091