MIAMI-DADE COUNTY

BUILDING CODE COMPLIANCE OFFICE (BCCO)
PRODUCT CONTROL DIVISION

MIAMI-DADE COUNTY, FLORIDA
METRO-DADE FLAGLER BUILDING
140 WEST FLAGLER STREET, SUITE 1603
MIAMI, FLORIDA 33130-1563
(305) 375-2901 FAX (305) 375-2908
www.buildingcodeonline.com

NOTICE OF ACCEPTANCE (NOA)

Therma-Tru Corporation
118 Industrial Drive
Edgerton, OH 43517

SCOPE:

This NOA is being issued under the applicable rules and regulations governing the use of construction materials. The documentation submitted has been reviewed by the BCCO and accepted by the Building Code and Product Review Committee (BCPRC) to be used in Miami Dade County and other areas where allowed by the Authority Having Jurisdiction (AHJ).

This NOA shall not be valid after the expiration date stated below. The BCCO (In Miami Dade County) and/or the AHJ (in areas other than Miami Dade County) reserve the right to have this product or material tested for quality assurance purposes. If this product or material fails to perform in the accepted manner, the manufacturer will incur the expense of such testing and the AHJ may immediately revoke, modify, or suspend the use of such product or material within their jurisdiction. BCPRC reserves the right to revoke this acceptance, if it is determined by BCCO that this product or material fails to meet the requirements of the applicable building code.

This product is approved as described herein, and has been designed to comply with the Florida Building Code, including the High Velocity Hurricane Zone.

DESCRIPTION: Outs-wing Glazed Residential Steel Door w\Sidelites

APPROVAL DOCUMENT: Drawing No. **S-2003**, titled "Therma-Tru WoodEdge Outswing up to 12-0 x 8-0 w/3-0 Sidelites", sheets 1 through 8 of 8, prepared by RW Building Consultant, Inc., dated 03/03/00 with revision **"5"** on 08/09/07, signed & sealed by Wendell Haney bearing the Miami-Dade County Product Control Renewal stamp with the Notice of Acceptance number and expiration datebyMiami-Dade County Product Control Division.

MISSILE IMPACT RATING: None

LABELING: Each unit shall bear a permanent label with the manufacturer's name or logo, city, state and following statement: "Miami-Dade County Product Control Approved", unless otherwise noted herein.

RENEWAL of this NOA shall be considered after a renewal application has been filed and there has been no change in the applicable building code negatively affecting the performance of this product.

TERMINATION of this NOA will occur after the expiration date or if there has been a revision or change in the materials, use, and/or manufacture of the product or process. Misuse of this NOA as an endorsement of any product, for sales, advertising or any other purposes shall automatically terminate this NOA. Failure to comply with any section of this NOA shall be cause for termination and removal of NOA.

ADVERTISEMENT: The NOA number preceded by the words Miami-Dade County, Florida, and followed by the expiration date may be displayed in advertising literature. If any portion of the NOA is displayed, then it shall be done in its entirety.

INSPECTION: A copy of this entire NOA shall be provided to the user by the manufacturer or its distributors and shall be available for inspection at the job site at the request of the Building Official.

This NOA **renews NOA # 02-0418.01** and, consists of this page 1 and evidence page E-1, as well as approval document mentioned above.

The submitted documentation was reviewed by **Mohammed Iqbal Shaikh, P.E.**

PRODUCT CONTROL ACCEPTED 08/18/07

NOA No 06-0501.02
Expiration Date: April 05, 2012
Approval Date: September 13,2007

Therma-Tru Corp.

NOTICE OF ACCEPTANCE: EVIDENCE SUBMITTED

A. DRAWINGS

1. Manufacturer's parts and sections drawings.
2. Drawing No. **S-2003**, titled "Therma-Tru WoodEdge Outswing up to 12-0 x 8-0 w/3-0 Sidelites", sheets 1 through 8 of 8, prepared by R W Building Consultant, Inc., dated 03/03/00 with revision **"5"** on 08/09/07, signed and sealed by Wendell W. Haney, P.E.

B. TESTS

1. Test Report No. **NCTL-210-2277-1,2,3** prepared by National Certified Testing Laboratories, dated 11/22/00, signed & sealed by Barry D. Portnoy, P.E., for the following tests:
   1) Air Infiltration Test, per PA 202-94
   2) Uniform Static Air Pressure Test, Loading per PA 202-94
   3) Water Resistance Test, per PA 202-94.
   4) Forced Entry Test, per SFBC 3603.2 (b) and PA 202-94

   along with manufacturer's parts and section drawings marked by National Certified Testing Laboratories. This test report was revised on 2-5-01 by addendum letter signed and sealed by witnessing engineer.

C. CALCULATIONS

Titled, Therma Tru PF935, S-2003 for structural analysis and anchors, signed and sealed dated 04/26/06 by Wendell W. Haney, P.E.

D. MATERIAL CERTIFICATIONS

See **NOA # 02-0418.01**

E QUALITY ASSURANCE

Miami-Dade County Building CODE Compliance Office.

F STATEMENTS

Code Compliance and no financial interest letter issued by R W Buillding Consultant, Inc. dated 04/26/06, signed and sealed by Wendell W. Haney, P.E.

G OTHER

NOA **# 02-0418.01** expiring April 05, 07

Mohammed Iqbal Shaikh, P.E.
Sr. Building Code Compliance Specialist
NOA No. 06-0501.02
Expiration Date: April 05, 2012
Approval Date: September 13, 2002

THERMA-TRU®

"CONSTRUCTION" AND "PREMIUM" SERIES
INSULATED STEEL DOOR WITH WOOD FRAMES.

GENERAL NOTES

1. THIS PRODUCT HAS BEEN EVALUATED AND IS IN COMPLIANCE WITH THE 2004 FLORIDA BUILDING CODE INCLUDING THE "HIGH VELOCITY HURRICANE ZONE".
2. WOOD BUCKS ENGINEERED BY OTHERS, MUST BE ANCHORED PROPERLY TO TRANSFER LOADS TO THE STRUCTURE AND BE REVIEWED BY BUILDING OFFICIAL.
3. PRODUCT ANCHORS SHALL BE AS LISTED AND SPACED AS SHOWN ON DETAILS. ANCHOR EMBEDMENT TO BASE MATERIAL SHALL BE BEYOND WALL DRESSING OR STUCCO.
4. MIAMI-DADE APPROVED IMPACT RESISTANT SHUTTERS ARE REQUIRED.
5. DESIGNED PRESSURE RATING SEE TABLE PAGE 1.
6. SIDELITES ARE AN OPTION AND CAN BE IN A SINGLE OR DOUBLE CONFIGURATION.

RESIDENTIAL INSULATED STEEL DOOR
(Common to all frame conditions)

Door Leaf Construction:
Face sheets: 25 GA.(0.018")minimum thickness, Galvanized steel A-525 commercial quality – AKDQ per ASTM 620 with yield strength Fy(min.)=47,000 psi
Core design: Polyurethane foam core, with1.9 lbs. density by BASF.
Construction: Flush or embossed type. The vertical edges of the skin, rolled formed to provide a mechanical interlock with finger jointed pine stiles. Wood composite end rails are butt jointed to styles at corners. Panels are sandwich glazed using a two piece PVC lite frame with mitered & welded corners.

TABLE OF CONTENTS

SHEET #	DESCRIPTION
1	COMMON (GENERAL NOTES, TYPICAL ELEVATION)
2	VERTICAL CROSS SECTIONS & BILL OF MATERIALS
3	HORIZONTAL CROSS SECTIONS & DOOR MODELS
4	HORIZONTAL CROSS SECTIONS & GLAZING DETAILS
5	X & OXXO ANCHORING LAYOUTS DP <=43.0 PSF
6	XX & OXO ANCHORING LAYOUTS DP <=43.0 PSF
7	X & OXXO ANCHORING LAYOUTS DP <=51.0 PSF
8	XX & OXO ANCHORING LAYOUTS DP <=51.0 PSF

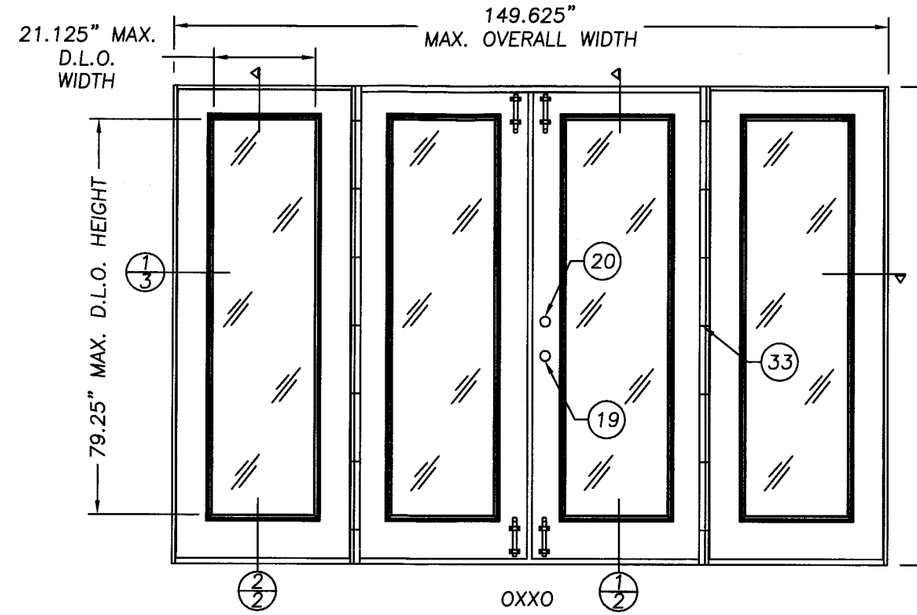

DOUBLE DOOR W/SIDELITES ELEVATION

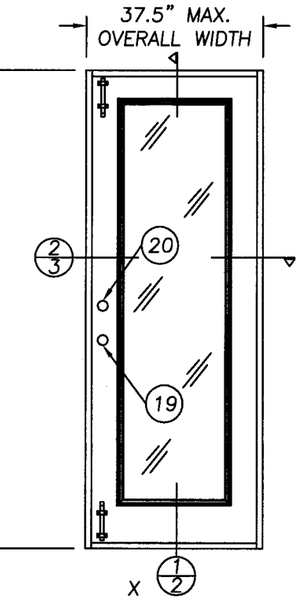

SINGLE DOOR ELEVATION

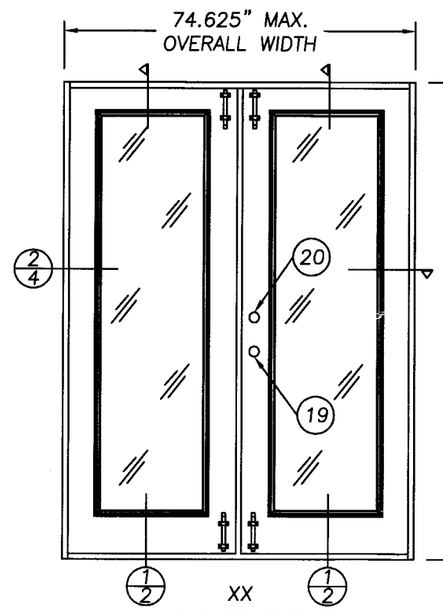

DOUBLE DOOR ELEVATION

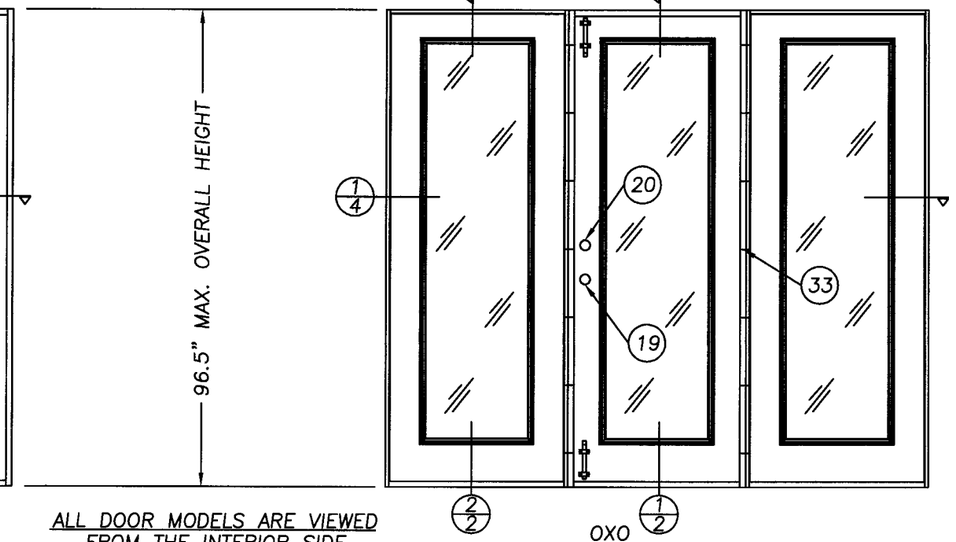

SINGLE DOOR W/SIDELITES ELEVATION

ALL DOOR MODELS ARE VIEWED FROM THE INTERIOR SIDE (OUTSWING DOORS)

NON-IMPACT

DESIGN PRESSURE RATING		
	WHERE WATER INFILTRATION REQUIREMENT IS NEEDED	
	ANCHORED AS TESTED	ADDITIONAL ANCHORS
POSITIVE	+ 48.0 PSF	+ 48.0 PSF
NEGATIVE	– 51.0 PSF	– 51.0 PSF

PRODUCT DESIGNATION as complying with the Florida Building Code Acceptance No: 06-0501.02 Expiration Date: 04/05/12
By M Khan
Miami Dade Product Control Division

Documents Prepared By:
RW BUILDING CONSULTANTS, INC.
P.O. Box 230 Valrico FL. 33595
Phone No.: 813.659.9197
Florida Board of Professional Engineers
Certificate Of Authorization No. 9813
Wendell W. Hayes, P.E. No. 54158
8-10-07

PRODUCT: THREMA TRU WOODEDGE OUTSWING UP TO 12-0 x 8-0 W/3-0 SIDELITES
PART OR ASSEMBLY: ELEVATIONS AND GENERAL NOTES

REVISIONS

NO.	DATE		BY
5	8/9/07	PER DADE REQUEST	YV
4	4/26/07	PER DADE LETTER	EW
3	3/27/06	GENERAL REVISION	EW
2	3/09/01	GENERAL REVISION	RW
1	4/11/00	GENERAL REVISION	TJH

DATE: 3/3/00
SCALE: N.T.S.
DWG. BY: TJH
CHK. BY: RW
DRAWING NO.: S-2003
SHEET 1 OF 8

© 2006 R.W. BUILDING CONSULTANTS INC.

R:\A - Projects\Project Folders\Proj 1101 - 1200\pf1193\D. RWBC Drawings\S-2003-R4\S-2003-1.dwg, Model

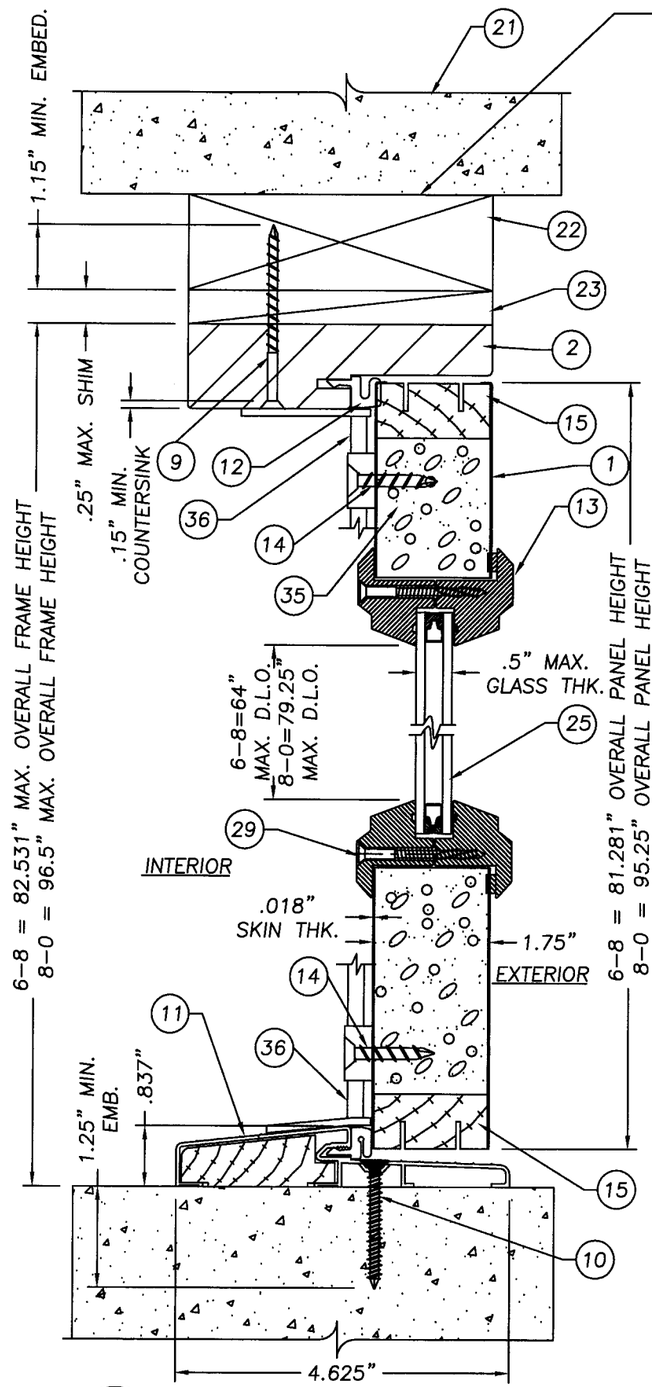

1/2 VERTICAL CROSS-SECTION DOOR

WOOD BUCKS ENGINEERED BY OTHERS, MUST BE ANCHORED PROPERLY TO TRANSFER LOADS TO THE STRUCTURE AND BE REVIEWED BY BUILDING OFFICIAL.

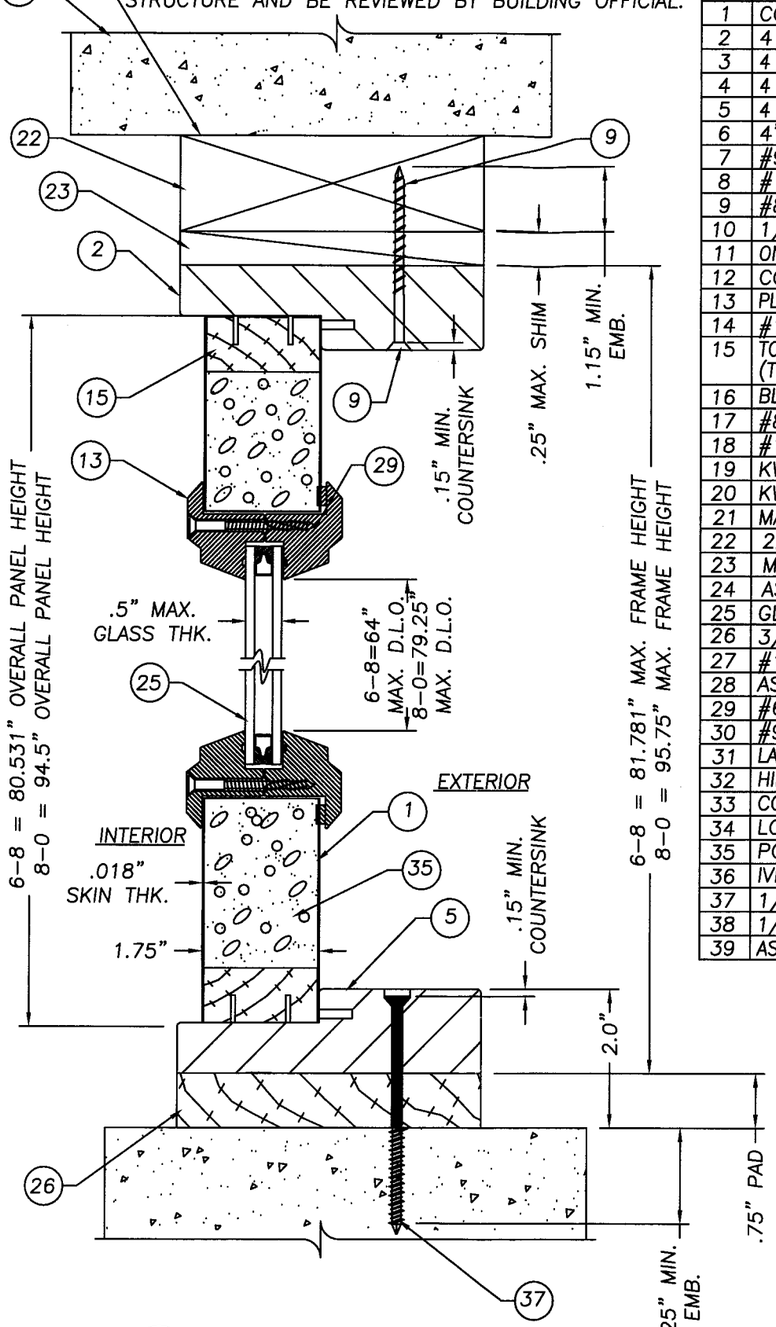

2/2 VERTICAL CROSS-SECTION SIDELITE

Item	DESCRIPTION	Material
1	CONSTRUC. SERIES DOOR (25GA. .018" MIN.)	STEEL
2	4 1/2" HEADER (THERMA-TRU)	WOOD
3	4 1/2" LATCH JAMB (THERMA-TRU, PONDEROSA PINE)	WOOD
4	4 1/2" HINGE JAMB (THERMA-TRU, PONDEROSA PINE)	WOOD
5	4 1/2" BLANK JAMB (THERMA-TRU, PONDEROSA PINE)	WOOD
6	4" x 4" HINGE .097" THK. (THERMA-TRU)	STEEL
7	#9 x 3/4" lg. (Hinge to Frame)	STEEL
8	#10 WOOD SCREW X 2 1/2" LG.	STEEL
9	#8 x 2 1/2" LG. WOOD SCREW	STEEL
10	1/4" TAPCON ANCHOR (ELCO, 1.75" MIN. LG.)	STEEL
11	ONE PIECE BUMP FACE THRESHOLD (THERMA-TRU)	ALUM./WOOD
12	COMPRESSION WEATHERSTRIP (THREMA-TRU)	
13	PLASTIC LIP LITE FRAME (PVC, THERMA-TRU)	PVC
14	#10 x 1 1/4" LG. TYPE "A" FLATHEAD	STEEL
15	TOP & BOTTOM RAIL (1.75" x 1.625") (THERMA-TRU, PONDEROSA PINE)	WOOD
16	BLANK SIDE STYLE (THERMA-TRU, PONDEROSA PINE)	WOOD
17	#8 x 1/2" LG. TYPE "AB" PANHEAD	STEEL
18	#10 WOOD SCREW X 2" LG.	STEEL
19	KWIKSET 200 DL PASSAGE	
20	KWIKSET 660 DEADBOLT	
21	MASONRY WALL	
22	2x WOOD BUCK	WOOD
23	MAX. 1/4" SHIM MATERIAL	WOOD
24	ASTRAGAL (.052" WALL THK.)	WOOD/ALUM.
25	GLAZING, 1/2" INSULATED TEMPERED GLASS	GLASS
26	3/4" THK. PRESSURE TREATED SIDELITE PAD	WOOD
27	#12 x 1/2"LG. PANHEAD SHEET METAL SCREW	STEEL
28	ASTRAGAL WEATHERSRIP	VINYL
29	#6-18 x 1 3/4" PHILLIPS FLATHEAD SCREW	STEEL
30	#9 x 1" LG. PHILLIPS FLATHEAD SCREW	STEEL
31	LATCH SIDE STYLE (THERMA-TRU, PONDEROSA PINE)	WOOD
32	HINGE SIDE STYLE (THERMA-TRU, PONDEROSA PINE)	WOOD
33	CORRUGATED STAPLE FASTENER (1 1/2" X 3/4")	STEEL
34	LOCK BLOCK (4" x 11" x 1.625")	WOOD
35	POLYURETHANE FOAM (BASF, 1.9lbs. DENSITY)	FOAM
36	IVES SURFACE BOLT (.25" STEEL)	STEEL
37	1/4" TAPCON ANCHOR (ELCO, 3.25" MIN. LG.)	STEEL
38	1/8 THK. CELLULAR GLAZING TAPE (STIK-II TAPE)	–
39	ASTRAGAL BOLT & STRIKE PLATE	STEEL

NOTE:
SIDELITE IS DIRECT SET INTO JAMB WITH #10 x 2" PH.F.H. WOOD SCREWS AT 6" FROM EACH END AND A MAX. OF 12" O.C. ON VERTICAL LEG JAMBS ONLY.

PROCESSED
in accordance with the Florida Building Code
Application No. 06-0501.02
Expiration Date 04/05/12
By M Thomas
Miami Dade Product Control Division

Documents Prepared By:
RW BUILDING CONSULTANTS, INC.
P.O. Box 230 Valrico FL. 33595
Phone No.: 813.659.9197
Florida Board of Professional Engineers
Certificate Of Authorization No. 9813
Wendell W. Haney P.E. No. 54158

PRODUCT:
THREMA TRU WOODEDGE OUTSWING UP TO 12-0 x 8-0 W/3-0 SIDELITES

PART OR ASSEMBLY:
VERTICAL CROSS SECTIONS & BILL OF MATERIALS

REVISIONS

NO.	DATE		BY
5	8/9/07	PER DADE REQUEST	YV
4	4/26/07	PER DADE LETTER	EW
3	3/27/06	GENERAL REVISION	EW
2	3/09/01	GENERAL REVISION	RW
1	4/11/00	GENERAL REVISION	TJH

DATE: 3/3/00
SCALE: N.T.S.
DWG. BY: TJH
CHK. BY: RW
DRAWING NO.: S-2003
SHEET 2 OF 8

© 2006 R.W. BUILDING CONSULTANTS INC.

R:\A - Projects\Project Folders\Proj 1101 - 1200\pf1193\D. RWBC Drawings\S-2003-R4\S-2003-2.dwg, Model

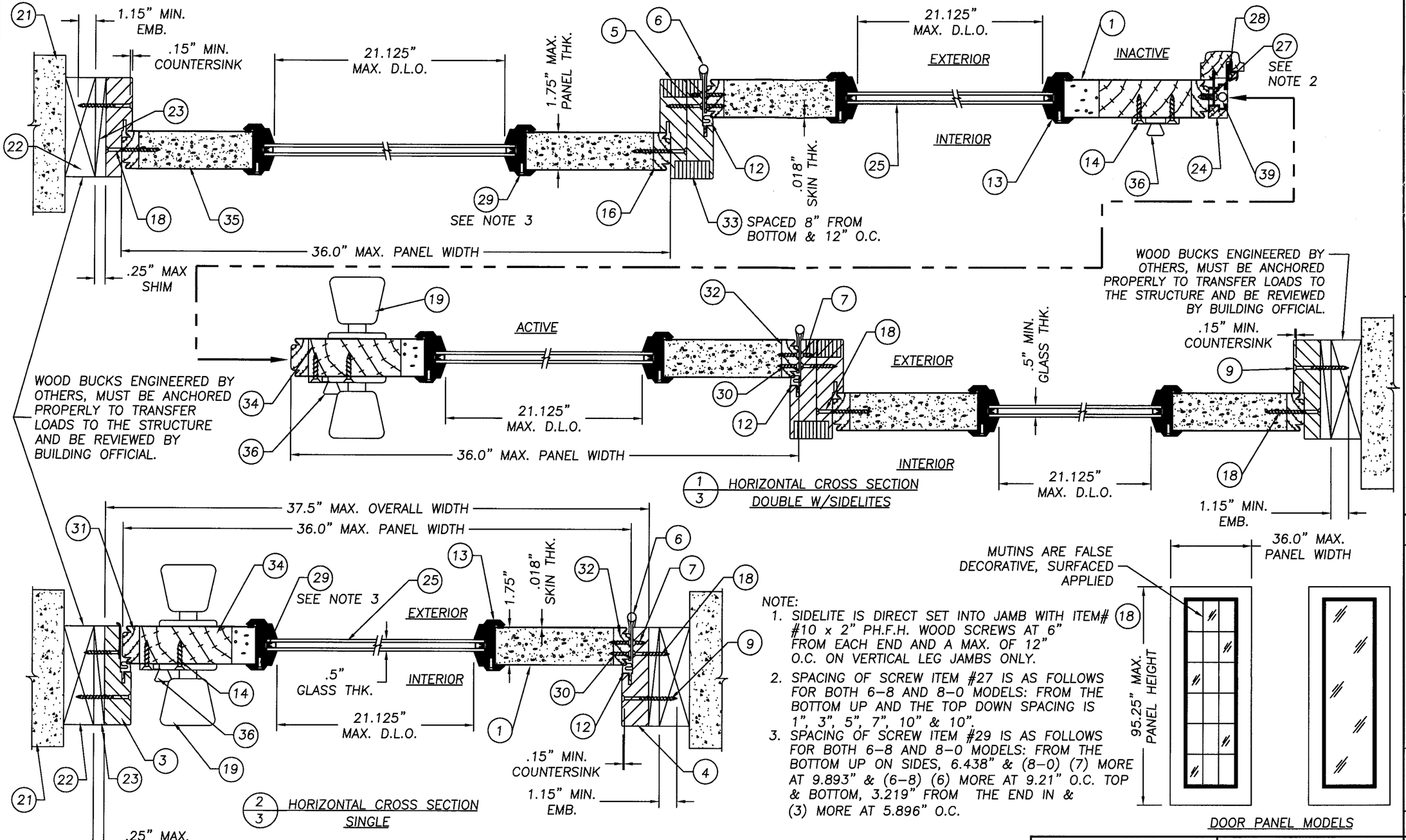

NOTE:

1. SIDELITE IS DIRECT SET INTO JAMB WITH ITEM# #10 x 2" PH.F.H. WOOD SCREWS AT 6" FROM EACH END AND A MAX. OF 12" O.C. ON VERTICAL LEG JAMBS ONLY.
2. SPACING OF SCREW ITEM #27 IS AS FOLLOWS FOR BOTH 6-8 AND 8-0 MODELS: FROM THE BOTTOM UP AND THE TOP DOWN SPACING IS 1", 3", 5", 7", 10" & 10".
3. SPACING OF SCREW ITEM #29 IS AS FOLLOWS FOR BOTH 6-8 AND 8-0 MODELS: FROM THE BOTTOM UP ON SIDES, 6.438" & (8-0) (7) MORE AT 9.893" & (6-8) (6) MORE AT 9.21" O.C. TOP & BOTTOM, 3.219" FROM THE END IN & (3) MORE AT 5.896" O.C.

PRODUCT RENEWED
as complying with the Florida Building Code
Acceptance No. 06-0501.02
Expiration Date 04/05/12
By
Miami Dade Product Control Division

Documents Prepared By:
RW BUILDING CONSULTANTS, INC.
P.O. Box 230 Valrico FL. 33595
Phone No.: 813.659.9197
Florida Board of Professional Engineers
Certificate Of Authorization No. 9813
Wendell W. Hartley, P.E. No. 54158
8-10-07

PRODUCT: THREMA TRU WOODEDGE OUTSWING UP TO 12-0 x 8-0 W/3-0 SIDELITES

PART OR ASSEMBLY: HORIZONTAL CROSS SECTIONS & DOOR MODELS

REVISIONS

NO.	DATE		BY
5	8/9/07	PER DADE REQUEST	YV
4	4/26/07	PER DADE LETTER	EW
3	3/27/06	GENERAL REVISION	EW
2	3/09/01	GENERAL REVISION	RW
1	4/11/00	GENERAL REVISION	TJH

DATE: 3/3/00
SCALE: N.T.S.
DWG. BY: TJH
CHK. BY: RW
DRAWING NO.: S-2003
SHEET 3 OF 8

© 2006 R.W. BUILDING CONSULTANTS INC.

R:\A - Projects\Project Folders\Proj 1101 - 1200\pf1193\D. RWBC Drawings\S-2003-R4\S-2003-3.dwg, Model

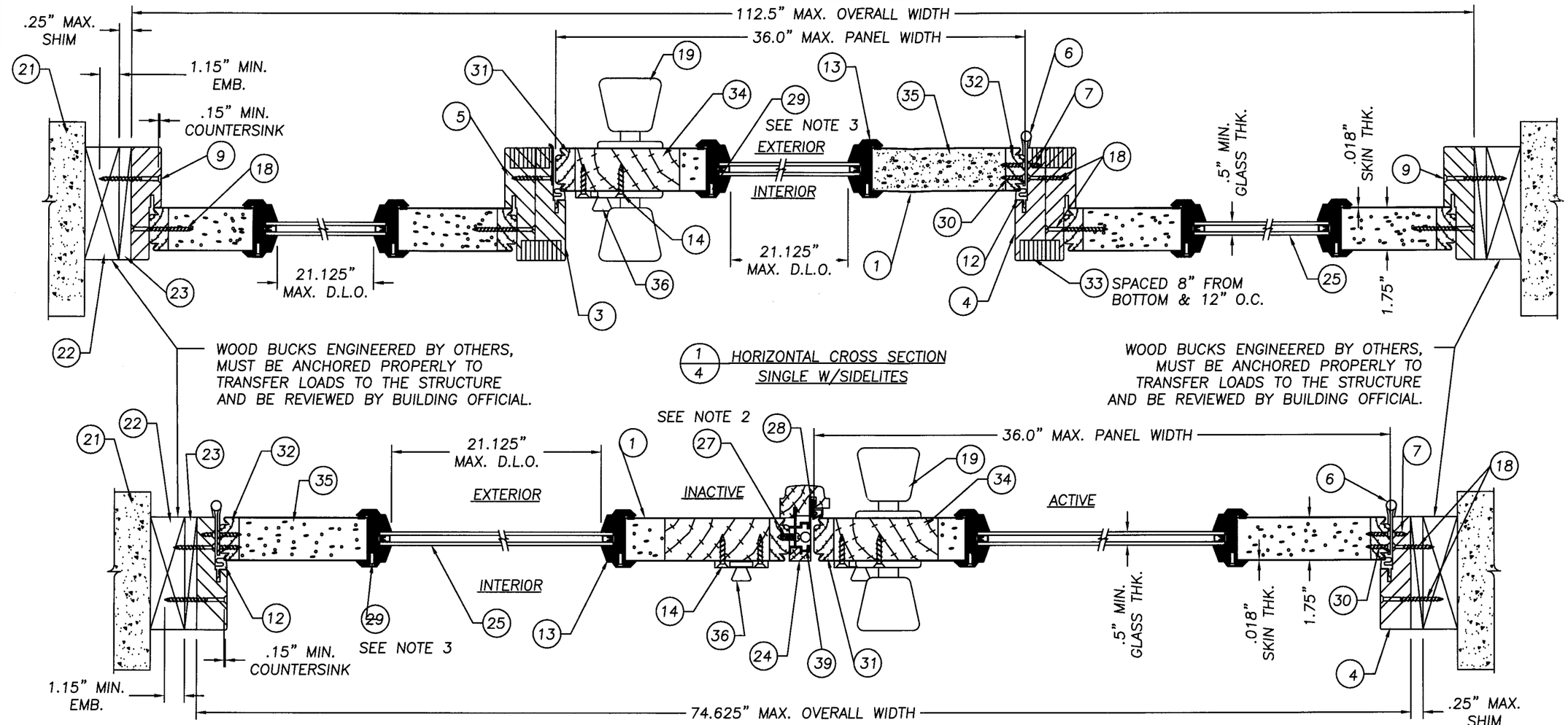

1/4 HORIZONTAL CROSS SECTION SINGLE W/SIDELITES

2/4 HORIZONTAL CROSS SECTION DOUBLE

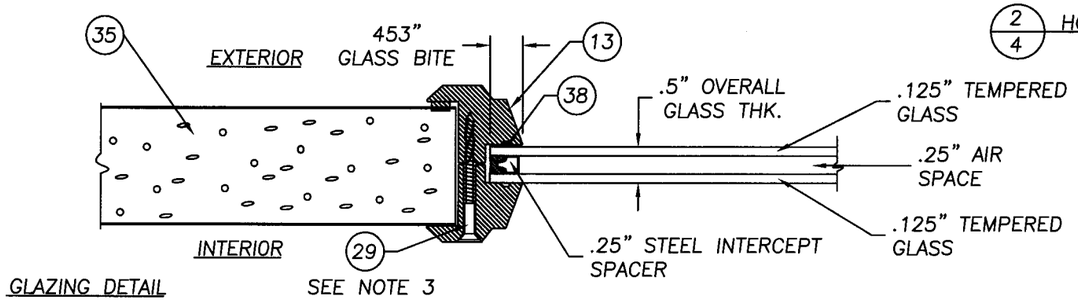

GLAZING DETAIL

NOTE:
1. SIDELITE IS DIRECT SET INTO JAMB WITH ITEM# 18 #10 x 2" PH.F.H. WOOD SCREWS AT 6" FROM EACH END AND A MAX. OF 12" O.C. ON VERTICAL LEG JAMBS ONLY.
2. SPACING OF SCREW ITEM #27 IS AS FOLLOWS FOR BOTH 6-8 AND 8-0 MODELS: FROM THE BOTTOM UP AND THE TOP DOWN SPACING IS 1", 3", 5", 7", 10" & 10".
3. SPACING OF SCREW ITEM #29 IS AS FOLLOWS FOR BOTH 6-8 AND 8-0 MODELS: FROM THE BOTTOM UP ON SIDES, 6.438" & (8-0) (7) MORE AT 9.893" & (6-8) (6) MORE AT 9.21" O.C. TOP & BOTTOM, 3.219" FROM THE END IN & (3) MORE AT 5.896" O.C.

PRODUCT RENEWED as complying with the Florida Building Code
Acceptance No 06-0501.02
Expiration Date 04/05/12
By [signature]
Miami Dade Product Control Division

Documents Prepared By:
RW BUILDING CONSULTANTS, INC.
P.O. Box 230 Valrico FL. 33595
Phone No.: 813.659.9197
Florida Board of Professional Engineers
Certificate Of Authorization No. 9813
Wendell W. Haney, P.E. No. 54158

PRODUCT: THREMA TRU WOODEDGE OUTSWING UP TO 12-0 x 8-0 W/3-0 SIDELITES

PART OR ASSEMBLY: HORIZONTAL CROSS SECTIONS & GLAZING DETAIL

NO.	DATE	REVISIONS	BY
5	8/9/07	PER DADE REQUEST	YV
4	4/26/07	PER DADE LETTER	EW
3	3/27/06	GENERAL REVISION	EW
2	3/09/01	GENERAL REVISION	RW
1	4/11/00	GENERAL REVISION	TJH

DATE: 3/3/00
SCALE: N.T.S.
DWG. BY: TJH
CHK. BY: RW
DRAWING NO.: S-2003
SHEET 4 OF 8

© 2006 R.W. BUILDING CONSULTANTS INC.

R:\A - Projects\Project Folders\Proj 1101 - 1200\pf1193\D. RWBC Drawings\S-2003-R4\S-2003-4.dwg, Model

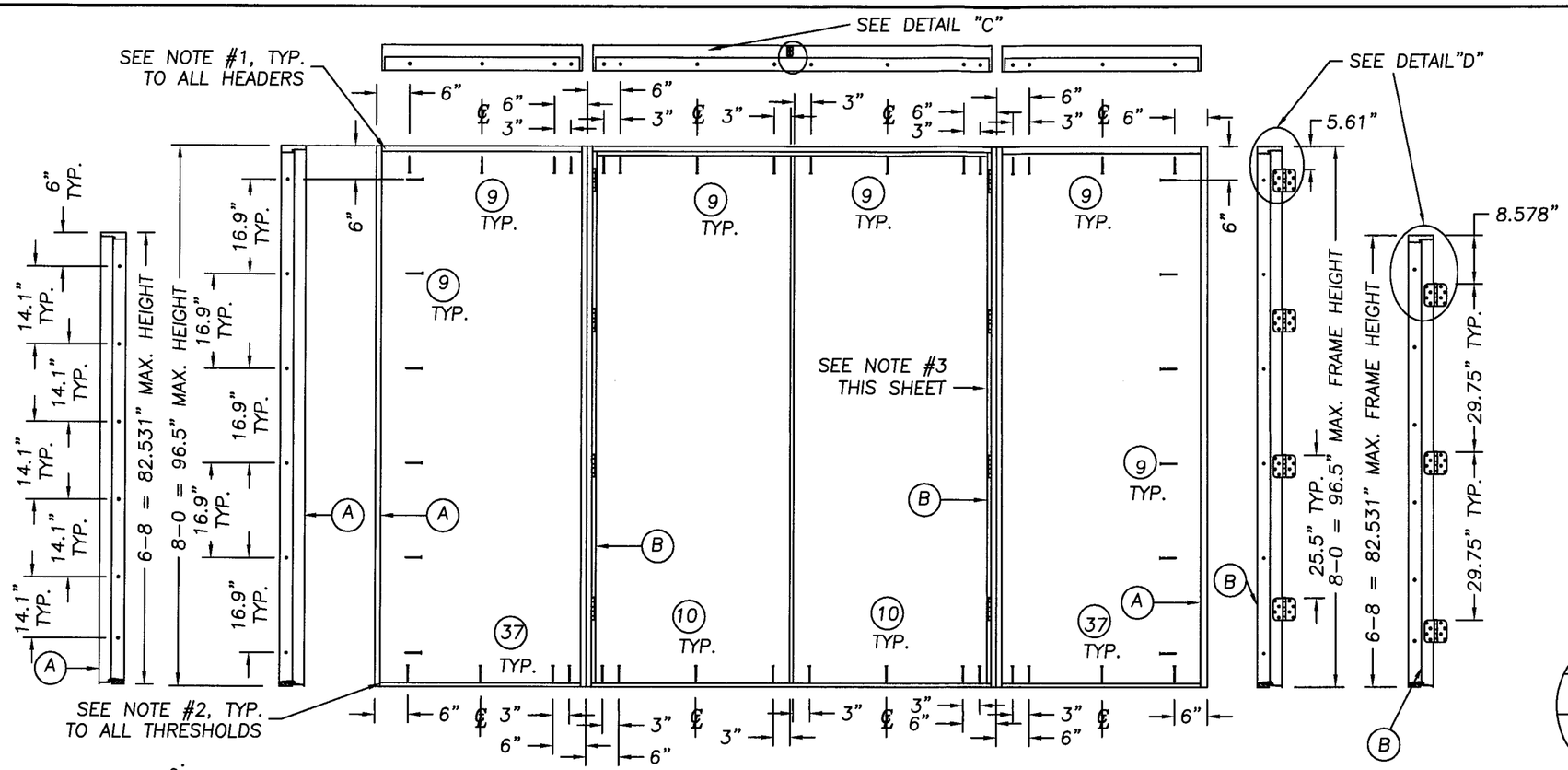

X & OXXO ANCHORING FOR DESIGN PRESSURES <= 43.0 PSF

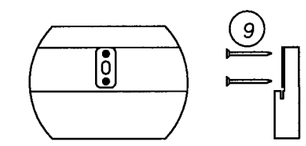

DETAIL "C"
ATTACH ASTRAGAL THROW BOLT STRIKE PLATE TO FRAME AS SHOWN.

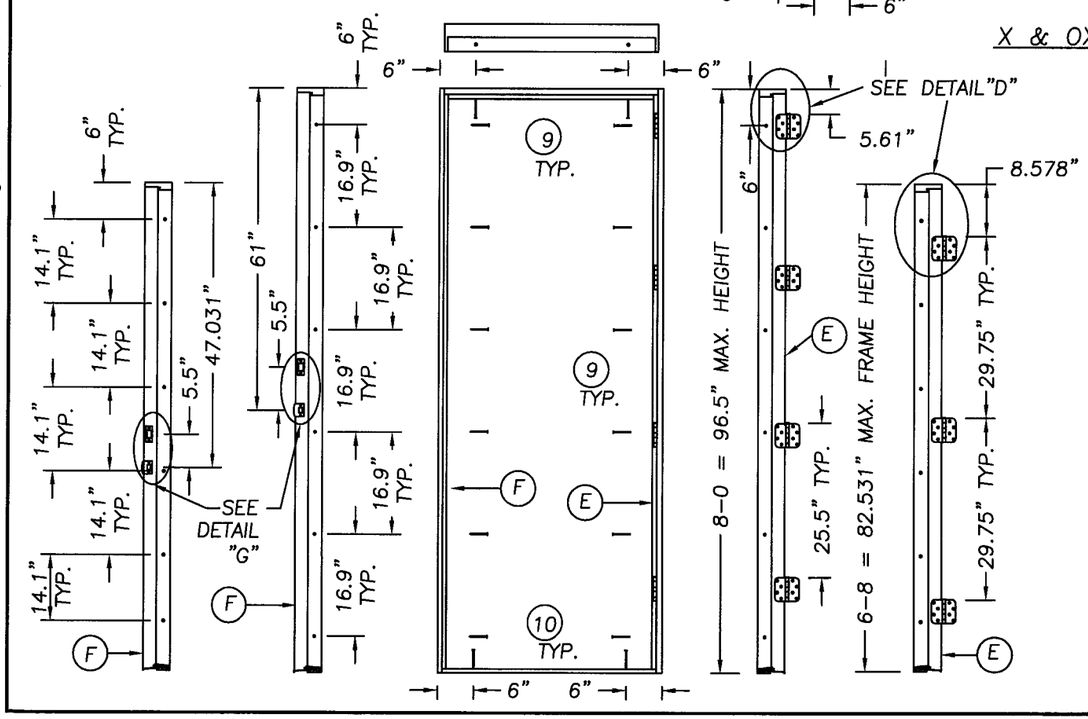

NOTES: APPLICABLE TO ALL FRAMES

1. HEAD JAMBS ARE JOINED TO THE SIDE JAMBS WITH (3) 16GA. .5" CROWN x 2" LG. STAPLES EACH END.
2. THE THRESHOLDS ARE JOINED TO THE SIDE JAMBS WITH (2) 6GA. .5" CROWN x 2" LG. STAPLES EACH END.
3. MULLIONS ARE ATTACHED AT THE HEAD & SILL TO SIDE JAMBS W/(3) 16GA. .5" CROWN x 2" LG. STAPLES.
4. 1/4" TAPCONS REQUIRE A MINIMUM 2–1/2" CLEARANCE TO MASONRY EDGES AND A MINIMUM 3" CLEARANCE TO ADJACENT TAPCONS.

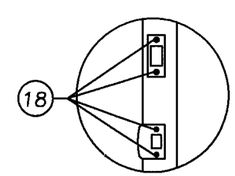

DETAIL "G"

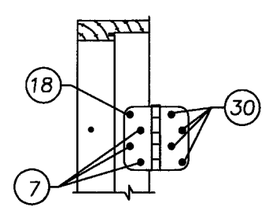

DETAIL "D"
HINGE DETAIL

PRODUCT RENEWED
In compliance with the Florida Building Code
Approval No. 06-0501.02
Expiration Date 04/05/12
By
Miami Dade Product Control Division

Documents Prepared By:
R.W. BUILDING CONSULTANTS, INC.
P.O. Box 230 Valrico FL. 33595
Phone No.: 813.659.9197
Florida Board of Professional Engineers
Certificate Of Authorization No. 9813
Wendell W. Hayes, P.E. No. 54158

PRODUCT: THREMA TRU WOODEDGE OUTSWING UP TO 12–0 x 8–0 W/3–0 SIDELITES

PART OR ASSEMBLY: X & OXXO ANCHORING LAYOUTS DP <=43.0 PSF

REVISIONS

NO.	DATE		BY
5	8/9/07	PER DADE REQUEST	YV
4	4/26/07	PER DADE LETTER	EW
3	3/27/06	GENERAL REVISION	EW
2	3/09/01	GENERAL REVISION	RW
1	4/11/00	GENERAL REVISION	TJH

DATE: 3/3/00
SCALE: N.T.S.
DWG. BY: TJH
CHK. BY: RW
DRAWING NO.: S–2003
SHEET 5 OF 8

© 2006 R.W. BUILDING CONSULTANTS INC.

R:\A - Projects\Project Folders\Proj 1101 - 1200\pf1193\D. RWBC Drawings\S-2003-R4\S-2003-5.dwg, Model

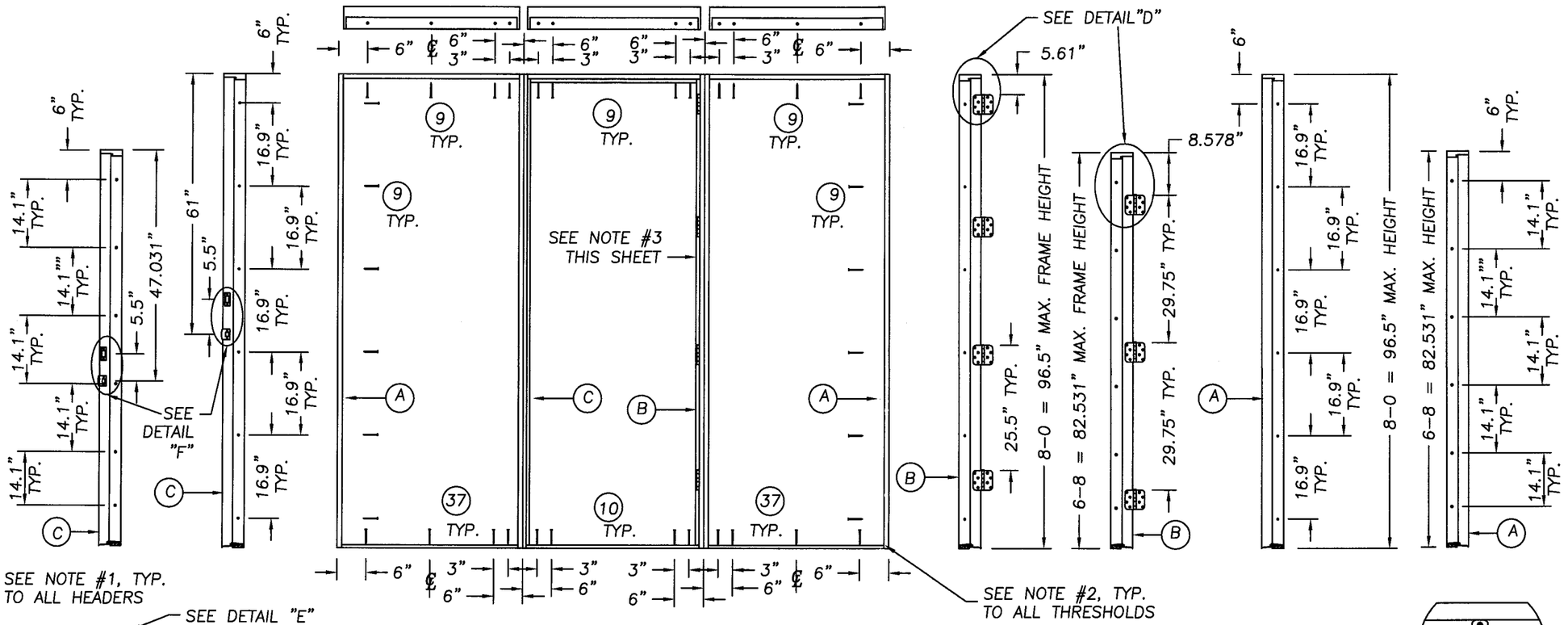

XX & OXO ANCHORING FOR DESIGN PRESSURES <= 43.0 PSF

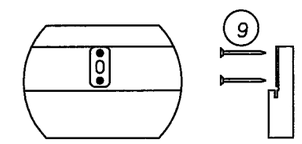

DETAIL "E"
ATTACH ASTRAGAL THROW BOLT STRIKE PLATE TO FRAME AS SHOWN.

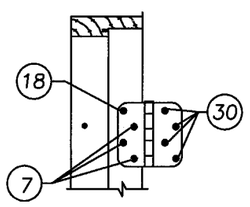

DETAIL "D"
HINGE DETAIL

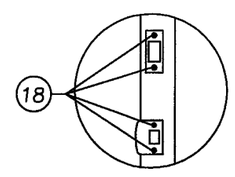

DETAIL "F"

NOTES: APPLICABLE TO ALL FRAMES

1. HEAD JAMBS ARE JOINED TO THE SIDE JAMBS WITH (3) 16GA. .5" CROWN x 2" LG. STAPLES EACH END.
2. THE THRESHOLDS ARE JOINED TO THE SIDE JAMBS WITH (2) 6GA. .5" CROWN x 2" LG. STAPLES EACH END.
3. MULLIONS ARE ATTACHED AT THE HEAD & SILL TO SIDE JAMBS W/(3) 16GA. .5" CROWN x 2" LG. STAPLES.
4. 1/4" TAPCONS REQUIRE A MINIMUM 2-1/2" CLEARANCE TO M ASONRY EDGES AND A MINIMUM 3" CLEARANCE TO ADJACENT TAPCONS.

RENEWED
with the Florida
Building Code
Application No 06-0501.02
Expiration Date 04/05/12
By
Miami Dade Product Control
Division

Documents Prepared By:
RW BUILDING CONSULTANTS, INC.
P.O. Box 230 Valrico FL. 33595
Phone No.: 813.659.9197
Florida Board of Professional Engineers
Certificate Of Authorization No. 9813
Wendell W. Hoover, P.E. No. 54158
8-10-07

PRODUCT: THREMA TRU WOODEDGE OUTSWING UP TO 12-0 x 8-0 W/3-0 SIDELITES

PART OR ASSEMBLY: XX & OXO ANCHORING LAYOUTS DP <=43.0 PSF

NO.	DATE	REVISIONS	BY
5	8/9/07	PER DADE REQUEST	YV
4	4/26/07	PER DADE LETTER	EW
3	3/27/06	GENERAL REVISION	EW
2	3/09/01	GENERAL REVISION	RW
1	4/11/00	GENERAL REVISION	TJH

DATE: 3/3/00
SCALE: N.T.S.
DWG. BY: TJH
CHK. BY: RW
DRAWING NO.: S-2003
SHEET 6 OF 8

© 2006 R.W. BUILDING CONSULTANTS INC.

R:\A - Projects\Project Folders\Proj 1101 - 1200\pf1193\D. RWBC Drawings\S-2003-R4\S-2003-6.dwg, Model

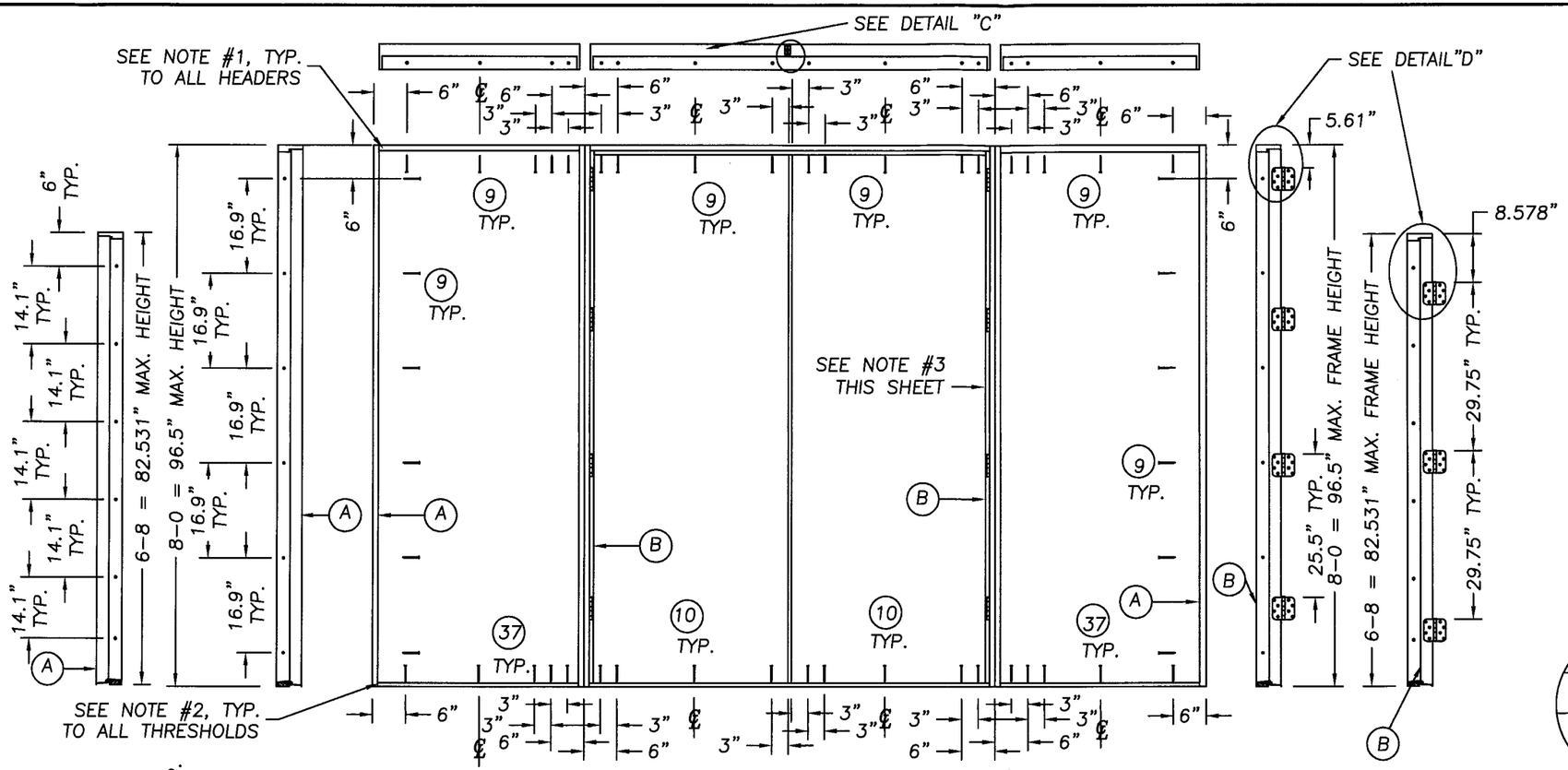

X & OXXO ANCHORING FOR DESIGN PRESSURES <= 51.0 PSF

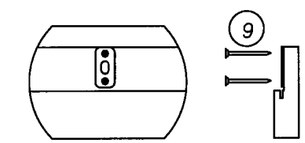

DETAIL "C"
ATTACH ASTRAGAL THROW BOLT STRIKE PLATE TO FRAME AS SHOWN.

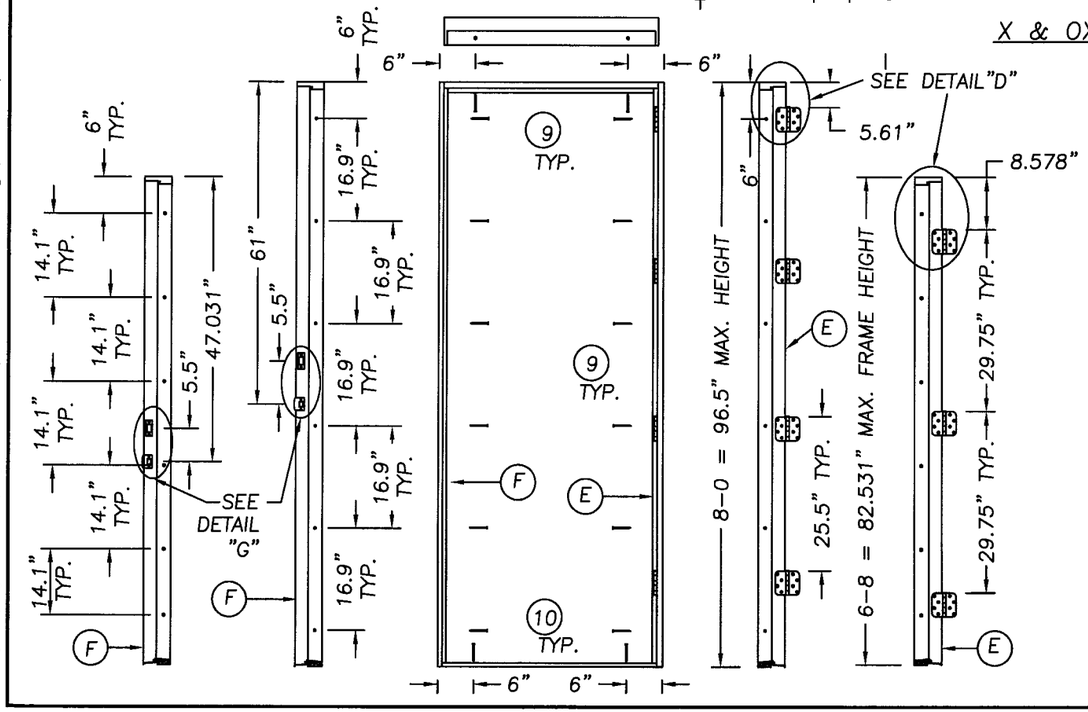

NOTES: APPLICABLE TO ALL FRAMES

1. HEAD JAMBS ARE JOINED TO THE SIDE JAMBS WITH (3) 16GA. .5" CROWN x 2" LG. STAPLES EACH END.
2. THE THRESHOLDS ARE JOINED TO THE SIDE JAMBS WITH (2) 6GA. .5" CROWN x 2" LG. STAPLES EACH END.
3. MULLIONS ARE ATTACHED AT THE HEAD & SILL TO SIDE JAMBS W/(3) 16GA. .5" CROWN x 2" LG. STAPLES.
4. 1/4" TAPCONS REQUIRE A MINIMUM 2–1/2" CLEARANCE TO MASONRY EDGES AND A MINIMUM 3" CLEARANCE TO ADJACENT TAPCONS.

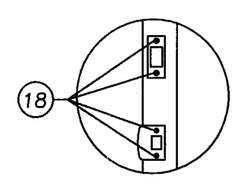

DETAIL "G"

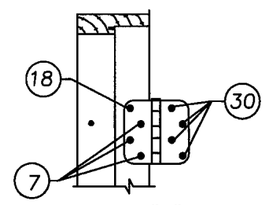

DETAIL "D"
HINGE DETAIL

PRODUCT RENEWED
as complying with the Florida Building Code
Acceptance No 06-0501.02
Expiration Date 04/05/12
By
Miami Dade Product Control Division

Documents Prepared By:
RW BUILDING CONSULTANTS, INC.
P.O. Box 236 Valrico FL. 33595
Phone No.: 813.659.9197
Florida Board of Professional Engineers
Certificate Of Authorization No. 9813
Wendell W. Hopes, P.E. No. 54158
8-10-07

PRODUCT: THREMA TRU WOODEDGE OUTSWING UP TO 12–0 x 8–0 W/3–0 SIDELITES

PART OR ASSEMBLY: X & OXXO ANCHORING LAYOUTS DP <=51.0 PSF

NO.	DATE		BY
5	8/9/07	PER DADE REQUEST	YV
4	4/26/07	PER DADE LETTER	EW
3	3/27/06	GENERAL REVISION	EW
2	3/09/01	GENERAL REVISION	RW
1	4/11/00	GENERAL REVISION	TJH

REVISIONS

DATE: 3/3/00
SCALE: N.T.S.
DWG. BY: TJH
CHK. BY: RW
DRAWING NO.: S–2003
SHEET 7 OF 8

© 2006 R.W. BUILDING CONSULTANTS INC.

R:\A - Projects\Project Folders\Proj 1101 - 1200\pf1193\D. RWBC Drawings\S-2003-R4\S-2003-7.dwg, Model

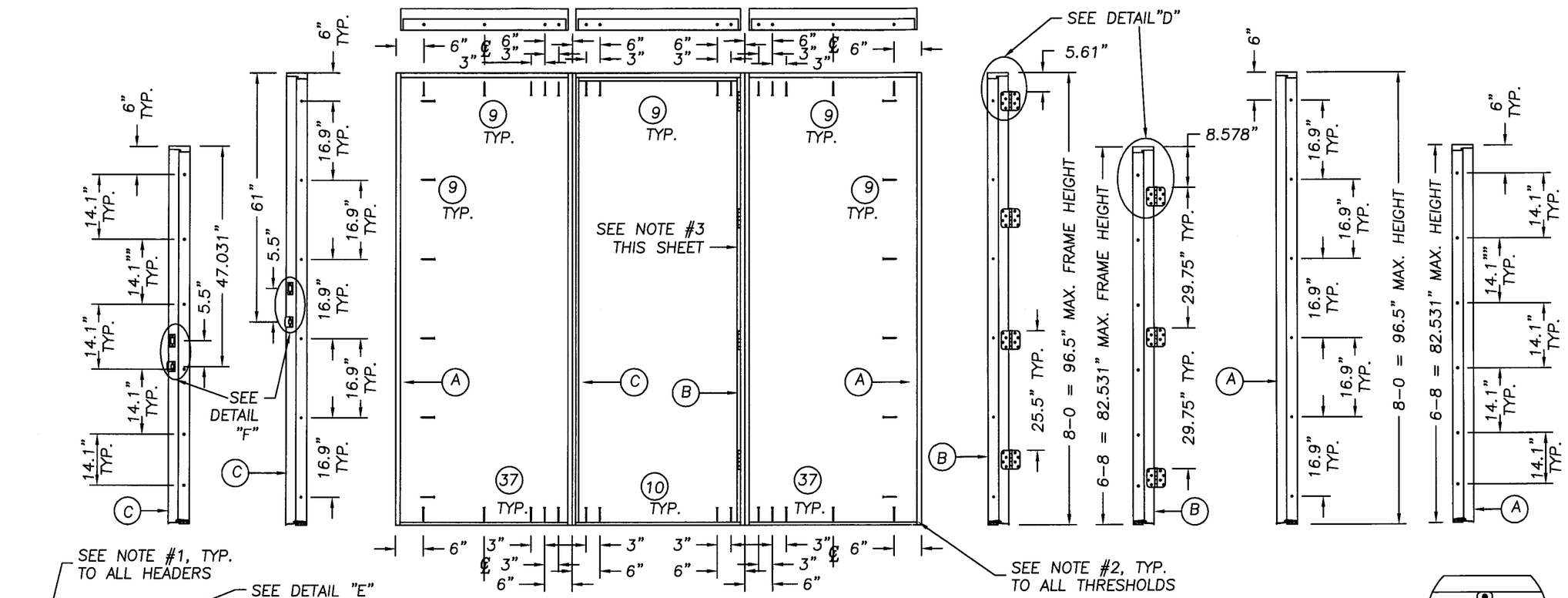

XX & OXO ANCHORING FOR DESIGN PRESSURES <= 51.0 PSF

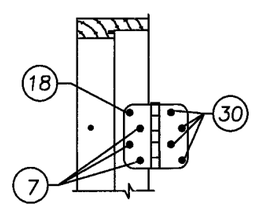

DETAIL "D"
HINGE DETAIL

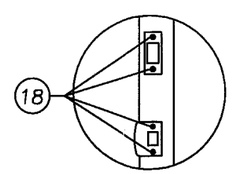

DETAIL "F"

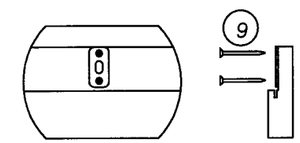

DETAIL "E"
ATTACH ASTRAGAL THROW BOLT STRIKE PLATE TO FRAME AS SHOWN.

NOTES: APPLICABLE TO ALL FRAMES

1. HEAD JAMBS ARE JOINED TO THE SIDE JAMBS WITH (3) 16GA. .5" CROWN x 2" LG. STAPLES EACH END.
2. THE THRESHOLDS ARE JOINED TO THE SIDE JAMBS WITH (2) 6GA. .5" CROWN x 2" LG. STAPLES EACH END.
3. MULLIONS ARE ATTACHED AT THE HEAD & SILL TO SIDE JAMBS W/(3) 16GA. .5" CROWN x 2" LG. STAPLES.
4. 1/4" TAPCONS REQUIRE A MINIMUM 2–1/2" CLEARANCE TO M ASONRY EDGES AND A MINIMUM 3" CLEARANCE TO ADJACENT TAPCONS.

PRODUCT RENEWED
as complying with the Florida Building Code
Acceptance No 06-0501.02
Expiration Date 04/05/12
By
Miami Dade Product Control Division

Documents Prepared By:
RW BUILDING CONSULTANTS, INC.
P.O. Box 230 Valrico FL. 33595
Phone No.: 813.659.9197
Florida Board of Professional Engineers
Certificate Of Authorization No. 9813
Wendell W. Harley, P.E. No. 54158
8/10/07

PRODUCT: THREMA TRU WOODEDGE OUTSWING UP TO 12–0 x 8–0 W/3–0 SIDELITES

PART OR ASSEMBLY: XX & OXO ANCHORING LAYOUTS DP <=51.0 PSF

NO.	DATE	REVISIONS	BY
5	8/9/07	PER DADE REQUEST	YV
4	4/26/07	PER DADE LETTER	EW
3	3/27/06	GENERAL REVISION	EW
2	3/09/01	GENERAL REVISION	RW
1	4/11/00	GENERAL REVISION	TJH

DATE: 3/3/00
SCALE: N.T.S.
DWG. BY: TJH
CHK. BY: RW
DRAWING NO.: S–2003
SHEET 8 OF 8

© 2006 R.W. BUILDING CONSULTANTS INC.

R:\A - Projects\Project Folders\Proj 1101 - 1200\pf1193\D. RWBC Drawings\S-2003-R4\S-2003-8.dwg, Model