MIAMI-DADE

BUILDING CODE COMPLIANCE OFFICE (BCCO)
PRODUCT CONTROL DIVISION

MIAMI-DADE COUNTY, FLORIDA
METRO-DADE FLAGLER BUILDING
140 WEST FLAGLER STREET, SUITE 1603
MIAMI, FLORIDA 33130-1563
(305) 375-2901 FAX (305) 375-2908

NOTICE OF ACCEPTANCE (NOA)

J.B. Garage Doors, Inc.
12195 N.W. 98th Ave.
Hialeah Gardens, FL 33018

SCOPE: This NOA is being issued under the applicable rules and regulations governing the use of construction materials. The documentation submitted has been reviewed by Miami-Dade County Product Control Division and accepted by the Board of Rules and Appeals (BORA) to be used in Miami Dade County and other areas where allowed by the Authority Having Jurisdiction (AHJ).

This NOA shall not be valid after the expiration date stated below. The Miami-Dade County Product Control Division (In Miami Dade County) and/or the AHJ (in areas other than Miami Dade County) reserve the right to have this product or material tested for quality assurance purposes. If this product or material fails to perform in the accepted manner, the manufacturer will incur the expense of such testing and the AHJ may immediately revoke, modify, or suspend the use of such product or material within their jurisdiction. BORA reserves the right to revoke this acceptance, if it is determined by Miami-Dade County Product Control Division that this product or material fails to meet the requirements of the applicable building code. This product is approved as described herein, and has been designed to comply with the Florida Building Code including the High Velocity Hurricane Zone.

DESCRIPTION: Steel Overhead Sectional Garage Door 18' wide.

APPROVAL DOCUMENT: Drawing No. 99-03, titled "Steel Overhead Sectional Garage Door", sheets 1 through 4 of 4, prepared, signed and sealed by Humayoun Farooq, P.E., dated 02/01/99, with last revision on 08/09/05 bearing the Miami-Dade County Product Control Renewal stamp with the Notice of Acceptance number and expiration date by the Miami-Dade County Product Control Division.

MISSILE IMPACT RATING: Large and Small Missile Impact

LABELING: Each unit shall bear a permanent label with the manufacturer's name or logo, city, state and following statement: "Miami-Dade County Product Control Approved or MDCPCA", unless otherwise noted herein.

RENEWAL of this NOA shall be considered after a renewal application has been filed and there has been no change in the applicable building code negatively affecting the performance of this product.

TERMINATION of this NOA will occur after the expiration date or if there has been a revision or change in the materials, use, and/or manufacture of the product or process. Misuse of this NOA as an endorsement of any product, for sales, advertising or any other purposes shall automatically terminate this NOA. Failure to comply with any section of this NOA shall be cause for termination and removal of NOA.

LIMITATIONS: This approval requires the manufacturer to do testing of all coils used to fabricate door panels under this Notice of Acceptance. A minimum of two specimens shall be cut from each coil and tensile tested according to ASTM E-8 by a Miami-Dade County approved laboratory selected and paid by the manufacturer. Every 3 months, four times a year, the manufacturer shall mail to this office: a copy of the tested reports with confirmation that the specimens were selected from coils at the manufacturer production facilities, and a notarized statement from the manufacturer that only coils with yield strength of 33ksi or more shall be used to make panels for Miami-Dade county under this Notice of Acceptance.

ADVERTISEMENT: The NOA number preceded by the words Miami-Dade County, Florida, and followed by the expiration date may be displayed in advertising literature. If any portion of the NOA is displayed, then it shall be done in its entirety.

INSPECTION: A copy of this entire NOA shall be provided to the user by the manufacturer or its distributors and shall be available for inspection at the job site at the request of the Building Official.

This NOA **renews NOA # 05-0915.07** and, consists of this page, evidence page as well as approval document mentioned above.

The submitted documentation was reviewed by **Candido F. Font PE.**

06/22/06

J.B. Garage Doors, Inc.

NOTICE OF ACCEPTANCE: EVIDENCE SUBMITTED

A. DRAWINGS

1. Drawing prepared by Al-Farooq Corporation, titled "Steel Overhead Sectional Garage Door," Drawing No. 99-03, dated 02/01/99, with latest revision on 08/09/05, sheets 1 through 4 of 4, signed and sealed by H. Farooq, PE.

B. TESTS

1. Test report of large missile impact test and cyclic wind pressure test on Sectional Commercial Door, prepared by Hurricane Engineering & Testing, Inc., Report No .HETI 98-770, dated 12/10/98, signed and sealed by H. M. Medina, PE.

2. Test report of uniform static air pressure test and forced entry resistance test on Sectional Commercial Door, prepared by Hurricane Engineering & Testing, Inc., Report No. HETI 98-763, dated 11/19/98, signed and sealed by H. M. Medina, PE.

C. CALCULATIONS

1. Calculations dated 03/15/99, pages 1 through 4, prepared by Al Farooq Corporation., signed by H. Farooq, PE.
2. Revised anchor calculations, prepared by Al-Farooq Corporation on 08/09/05, sheets C1 through C5, signed and sealed by H. Farooq PE.

D. QUALITY ASSURANCE

1. Building Code Compliance Office.

E. MATERIAL CERTIFICATIONS

1. Tensile Test Report No-Hit 98-T126, prepared Hurricane Engineering & Testing, Inc., dated 12/04/98, signed and sealed by H. M. Medina, PE.

F STATEMENTS

1. Letter of Code Compliance issued by Al-Farooq Corporation on 07/22/05, signed by H. Farooq, PE.
2. Letter of No Financial Interest issued by Al-Farooq Corporation. on 03/24/99, signed by H. Farooq, PE.
3. No change letter issued by J.B. Garage Doors on 05/02/06, signed by R. Berger and notarized by C. J. Prati.

06/22/06

Candido F. Font PE
Senior Product Control Examiner
NOA No 06-0503.01
Expiration Date: July 22, 2012
Approval Date: June 22, 2006

DOOR WIDTH	NO. OF STILES
12'-3" TO 16'-11"	(4) CENTER STILES
17'-0" TO 18'-2"	(5) CENTER STILES

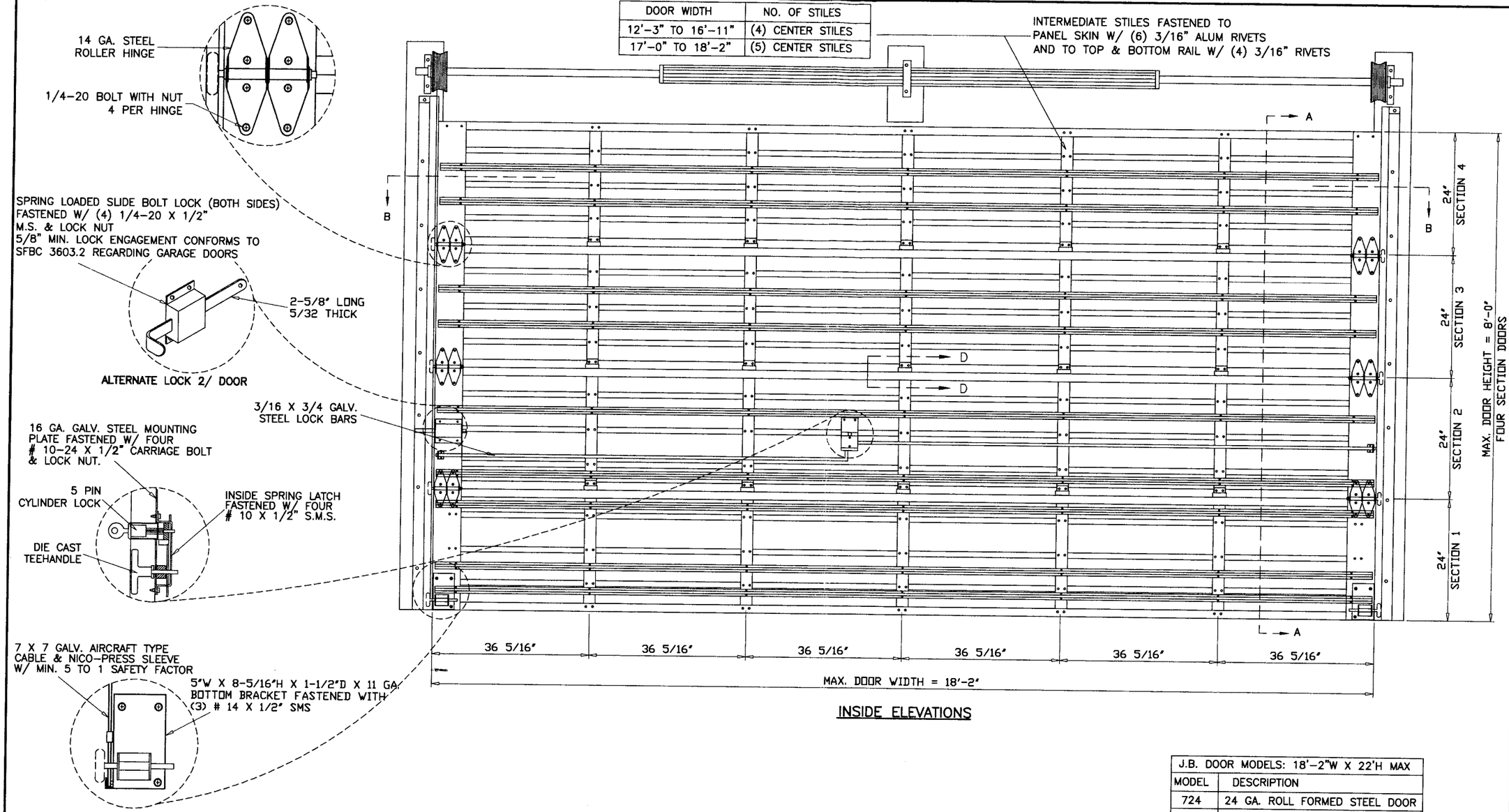

INSIDE ELEVATIONS

J.B. DOOR MODELS: 18'-2"W X 22'H MAX	
MODEL	DESCRIPTION
724	24 GA. ROLL FORMED STEEL DOOR
720	20 GA. ROLL FORMED STEEL DOOR

NOTE: MODEL 724 TESTED.

DESIGN PRESSURE RATING = + 50.0 PSF
− 60.0 PSF

THIS PRODUCT IS RATED FOR LARGE MISSILE IMPACT

GENERAL NOTES

1. THIS PRODUCT HAS BEEN DESIGNED AND TESTED TO COMPLY WITH THE REQUIREMENTS OF THE FLORIDA BUILDING CODE 2004 EDITION INCLUDING HIGH VELOCITY HURRICANE ZONE.
2. ANCHORS SHALL BE AS LISTED, SPACED AS SHOWN ON DETAILS. ANCHOR EMBEDMENT TO BASE MATERIAL SHALL BE BEYOND WALL DRESSING OR STUCCO.
3. ALL BOLTS, NUTS AND WASHERS SHALL BE ZINC PLATED CARBON STEEL.
4. ANCHORING OR LOADING CONDITIONS OTHER THAN THOSE SHOWN IN THESE DETAILS ARE NOT PART OF THIS APPROVAL.
5. A 33% INCREASE IN ALLOWABLE STRESS IS USED IN DESIGN OF WOOD ANCHORS ONLY.

Engr: DR. HUMAYOUN FAROOQ
STRUCTURES
FLA. PE # 16557
C.A.N. 3538

APR 2 6 2006

PRODUCT RENEWED
as complying with the Florida Building Code
Acceptance No. 06-0503.01
Expiration Date 09/22/12
By
Miami-Dade Product Control Division

AL-FAROOQ CORPORATION
ENGINEERS, PLANNERS & PRODUCT DESIGN
1235 SW 87 AVE
MIAMI, FLORIDA 33174
TEL. (305) 264-8100 FAX. (305) 262-6978
GARAGE\99-03JBD

STEEL OVERHEAD SECTIONAL GARAGE DOOR

J.B. GARAGE DOORS INC.
12195 N.W. 98 TH. AVE.
HIALEAH GARDENS, FL. 33016
TEL. (305) 558-1658

revisions:

no	date	by	description
A	4.30.99	H	GENERAL REVISION
B	8.09.05	H	UPDATED FOR 2004 FBC

date: 02-01-99
scale: NONE
dr. by: HAMID
chk. by:

drawing no. 99-03

sheet 1 of 4

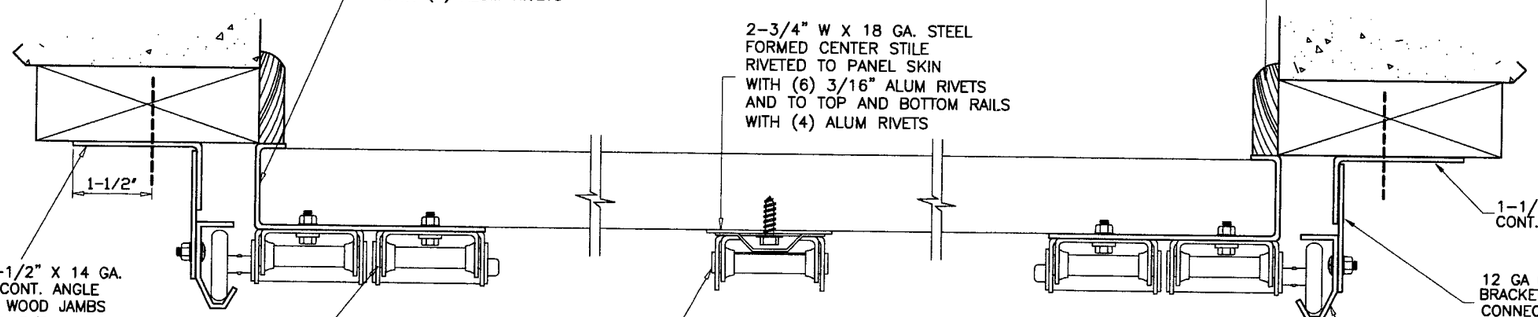

SECTION B-B

Engr: DR. HUMAYOUN FAROOQ
STRUCTURES
FLA. PE # 16557
C.A.N. 3538

APR 2 6 2006

PRODUCT RENEWED
as complying with the Florida
Building Code
Acceptance No. 06-0503.01
Expiration Date 07/22/12
By
Miami Dade Product Control
Division

STEEL OVERHEAD SECTIONAL GARAGE DOOR

J.B. GARAGE DOORS INC.
12195 N.W. 98 TH. AVE.
HIALEAH GARDENS, FL. 33016
TEL. (305) 558-1658

AL-FAROOQ CORPORATION
ENGINEERS, PLANNERS & PRODUCT DESIGN
1235 SW 87 AVE
MIAMI, FLORIDA 33174
TEL. (305) 264-8100 FAX. (305) 262-6978

GARAGE\99-03JBD

revisions:

no	date	by	description
B	8.09.05	H	SHEET ADDED

date: 02-01-99
scale: NONE
dr. by: HAMID
chk. by:

drawing no.
99-03

sheet 2 of 4

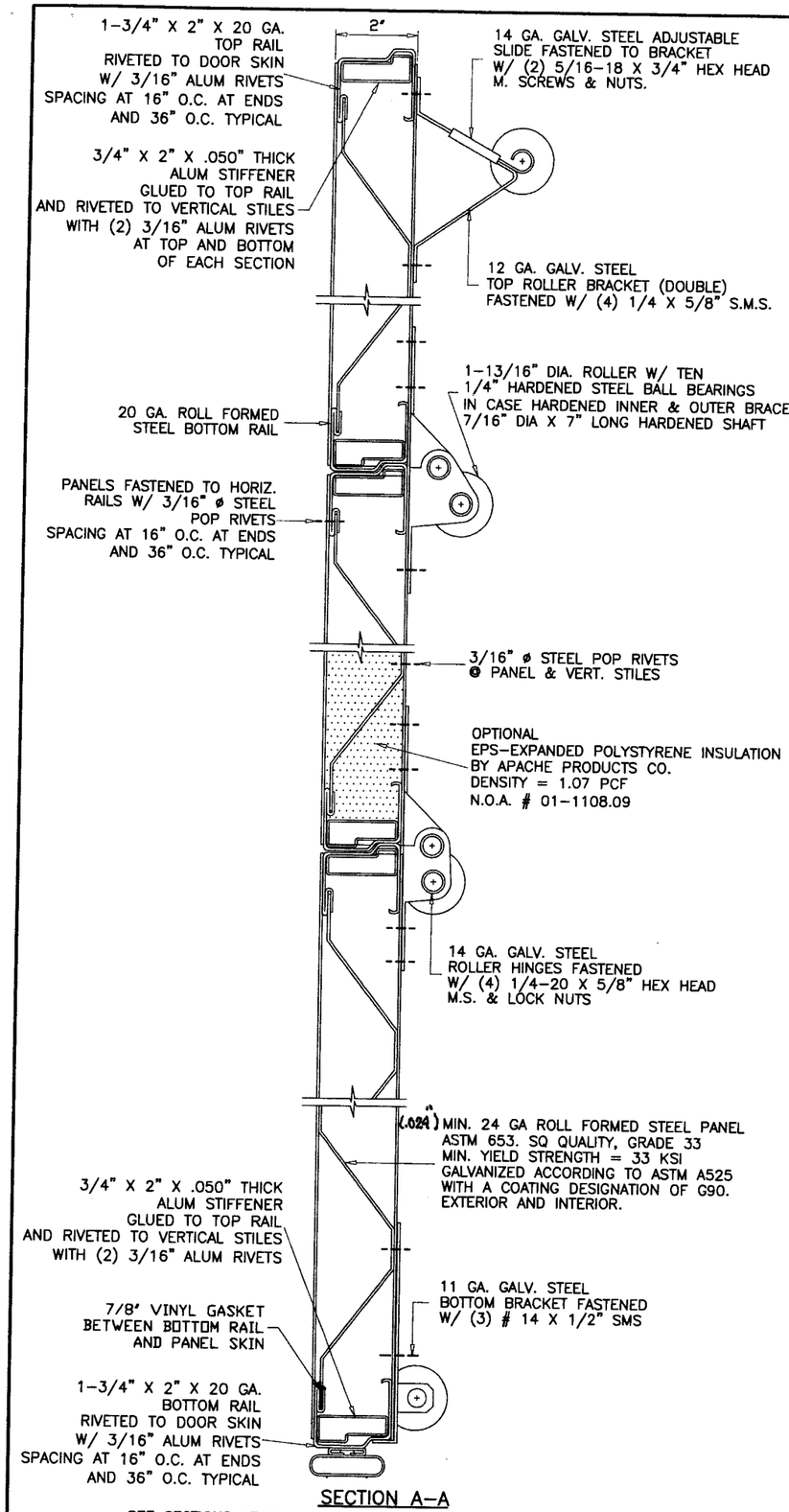

SECTION A-A

SEE SECTIONS AT RIGHT FOR LOCATION OF REINFORCING TRUSSES

TWO (2) REINFORCING TRUSSES PER SECTION
EXCEPT
THREE (3) ON THE BOTTOM SECTION

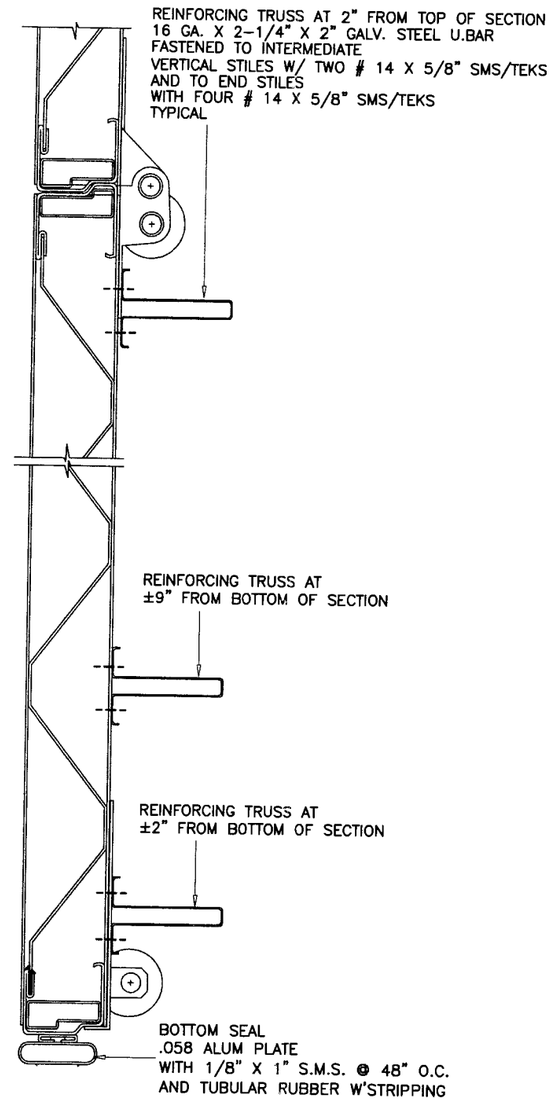

1ST SECTION (BOTTOM)

REINFORCING

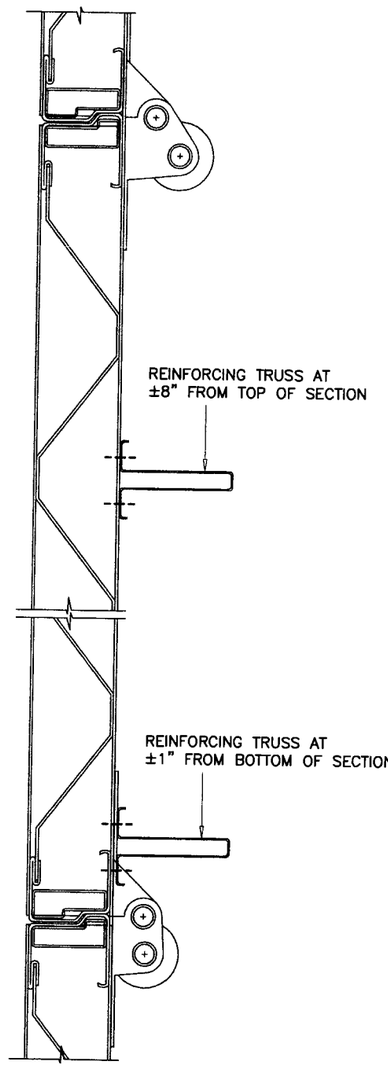

2ND SECTION (BOTTOM)

REINFORCING

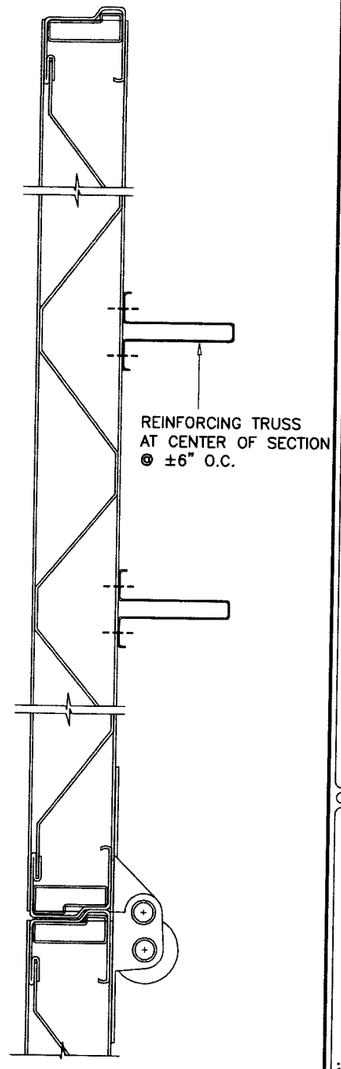

ALL TOP SECTIONS

REINFORCING

Engr: DR. HUMAYOUN FAROOQ
STRUCTURES
FLA. PE # 16557
C.A.N. 3538

APR 2 6 2006

PRODUCT APPROVED
is complying with the Florida Building Code
Application No. 06-0503.01
Expiration Date 07/23/12
By
Miami Dade Product Control Division

AL-FAROOQ CORPORATION
ENGINEERS, PLANNERS & PRODUCT DESIGN
1235 SW 87 AVE
MIAMI, FLORIDA 33174
TEL. (305) 264-8100 FAX. (305) 262-6978

GARAGE\99-03JBD

STEEL OVERHEAD SECTIONAL GARAGE DOOR

J.B. GARAGE DOORS INC.
12195 N.W. 98 TH. AVE.
HIALEAH GARDENS, FL. 33016
TEL. (305) 558-1658

revisions:

no	date	by	description
B	8.09.05	H	NOA NO. REV.

date: 02-01-99
scale: NONE
dr. by: HAMID
chk. by:

drawing no. 99-03

sheet 3 of 4

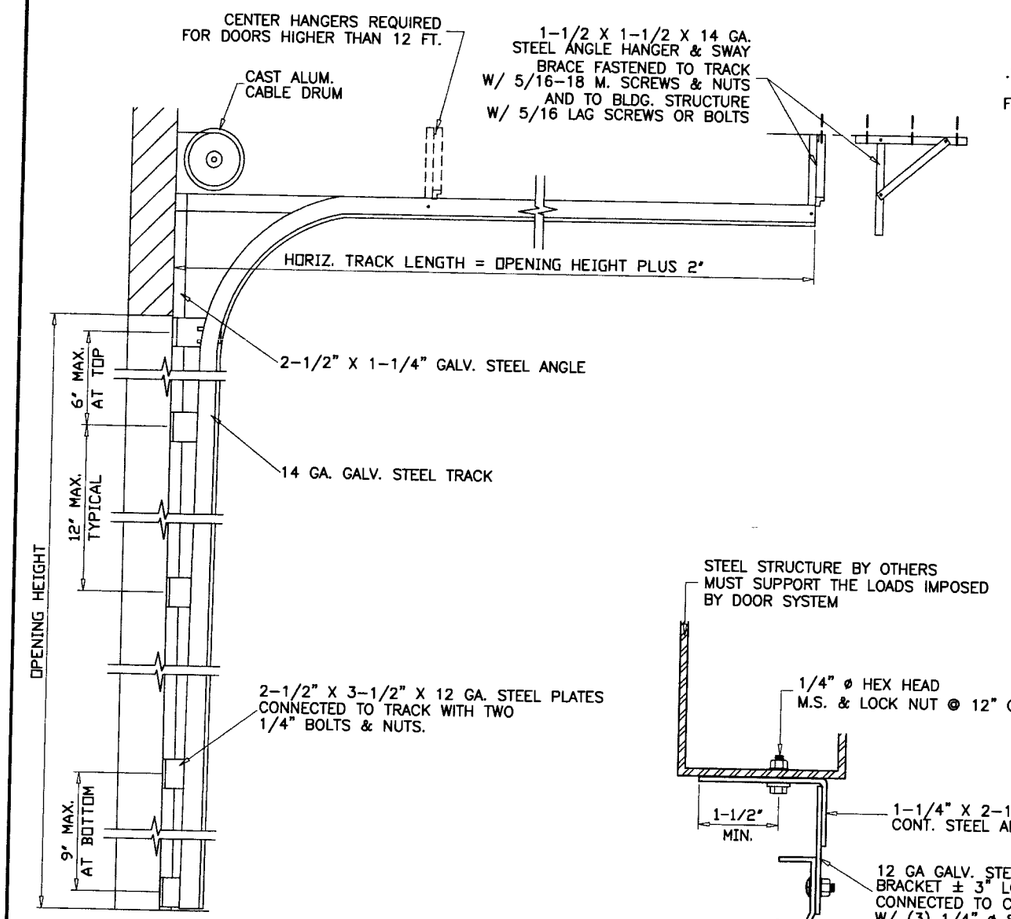

DOOR TRACK AS VIEWED FROM CENTER OF OPENING

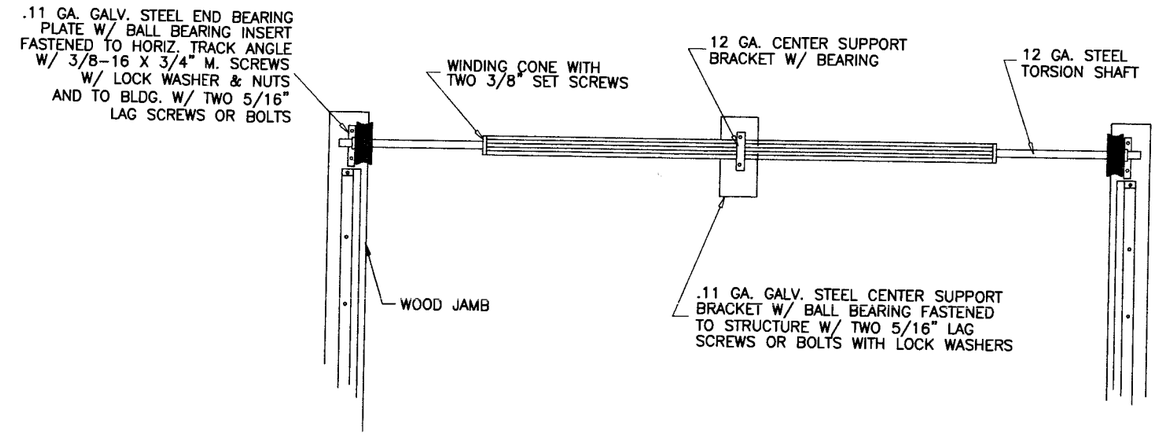

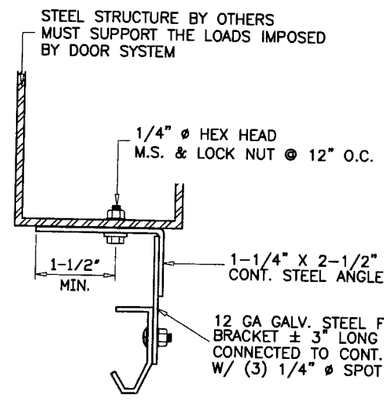

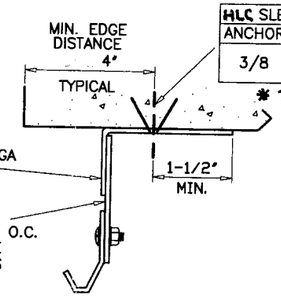

HLC SLEEVE ANCHOR SPACING HILTI			
ANCHOR	STRUCTURE	EMBED	SPACING
3/8	BLOCK	1-1/4"	6-1/2"
	* CONC.	1-1/2"	7-1/2"

* 3000 PSI

ALTERNATE TRACK INSTALLATIONS

WOOD FRAME BUILDINGS

STUD WALLS OR DOOR OPENING SHALL BE FRAMED SOLID BY NOT LESS THAN (3) 2X6 PRESSURE TREATED GRADE 2 OR BETTER WOOD STUDS.
STUD WALLS TO BE CONT. FROM FOOTING TO TIE BEAM.

WOOD BUCK CONNECTION TO MASONRY

TRACK SHALL BE SECURED WITH TRACK BRACKETS TO PRESSURE TREATED 2X6 WOOD JAMBS WHICH SHALL BE ANCHORED TO GROUTED REINFORCED MASONRY BLOCK WALL OR CONC. COLUMN WITH

1/4" TAPCONS BY 'ELCO'
OR EQUIV. ANCHOR HOLDING CURRENT NOTICE OF ACCEPTANCE.
WITH 1-3/4" MIN. EMBED AND SPACING OF
5" O.C. INTO BLOCK WALL
7-1/2" O.C. INTO 3000 PSI CONCRETE.

THE BLOCK WALL CELLS SHALL BE GROUT FILLED AND REINFORCED WITH FOUR # 5 BARS EXTENDING INTO FOOTING AND INTO TIE BEAMS ALL BARS SHALL BE CONTINUOUS FROM TIE BEAMS TO FOOTING.

PREPARATION OF JAMBS BY OTHERS

DOOR HEIGHT	NO. OF TRUSSES	SECTION HEIGHTS *										
		1ST	2ND	3RD	4TH	5TH	6TH	7TH	8TH	9TH	10TH	11TH
7'-0"	9	21"	21"	21"	21"	N/A	N/A	N/A	N/A	N/A	N/A	N/A
8'-0"	9	24"	24"	24"	24"	N/A	N/A	N/A	N/A	N/A	N/A	N/A
9'-0"	11	24"	21"	21"	21"	21"	N/A	N/A	N/A	N/A	N/A	N/A
10'-0"	11	24"	24"	24"	24"	24"	N/A	N/A	N/A	N/A	N/A	N/A
11'-0"	13	24"	24"	21"	21"	21"	21"	N/A	N/A	N/A	N/A	N/A
12'-0"	13	24"	24"	24"	24"	24"	24"	N/A	N/A	N/A	N/A	N/A
13'-0"	15	24"	24"	24"	21"	21"	21"	21"	N/A	N/A	N/A	N/A
14'-0"	15	24"	24"	24"	24"	24"	24"	24"	N/A	N/A	N/A	N/A
15'-0"	17	24"	24"	24"	24"	21"	21"	21"	21"	N/A	N/A	N/A
16'-0"	17	24"	24"	24"	24"	24"	24"	24"	24"	N/A	N/A	N/A
17'-0"	19	24"	24"	24"	24"	24"	21"	21"	21"	21"	N/A	N/A
18'-0"	19	24"	24"	24"	24"	24"	24"	24"	24"	24"	N/A	N/A
19'-0"	21	24"	24"	24"	24"	24"	24"	21"	21"	21"	21"	N/A
20'-0"	21	24"	24"	24"	24"	24"	24"	24"	24"	24"	24"	N/A
21'-0"	23	24"	24"	24"	24"	24"	24"	24"	21"	21"	21"	21"
22'-0"	23	24"	24"	24"	24"	24"	24"	24"	24"	24"	24"	24"

*-SECTIONS ARE NUMBERED STARTING AT THE BOTTOM

Engr: DR. HUMAYOUN FAROOQ
STRUCTURES
FLA. PE # 16557
C.A.N. 3538

APR 26 2006

PRODUCT RENEWED
as complying with the Florida Building Code
Application No. 06-0503.01
Expiration Date 07/22/12
By
Miami-Dade Product Control Division

AL-FAROOQ CORPORATION
ENGINEERS, PLANNERS & PRODUCT DESIGN
1235 SW 87 AVE
MIAMI, FLORIDA 33174
TEL. (305) 264-8100 FAX. (305) 262-6978

GARAGE\99-03JBD

STEEL OVERHEAD SECTIONAL GARAGE DOOR

J.B. GARAGE DOORS INC.
12195 N.W. 98 TH. AVE.
HIALEAH GARDENS, FL. 33016
TEL. (305) 558-1658

revisions:

no	date	by	description
B	8.09.05	H	ANCHOR SPACING REV.

date: 02-01-99
scale: NONE
dr. by: HAMID
chk. by:

drawing no. 99-03

sheet 4 of 4