MIAMI-DADE COUNTY
BUILDING CODE COMPLIANCE OFFICE (BCCO)
PRODUCT CONTROL DIVISION

MIAMI-DADE COUNTY, FLORIDA
METRO-DADE FLAGLER BUILDING

140 WEST FLAGLER STREET, SUITE 1603
MIAMI, FLORIDA 33130-1563
(305) 375-2901 FAX (305) 375-2908
www.buildingcodeonline.com

NOTICE OF ACCEPTANCE (NOA)

Florida Hurricane Products, Inc.
5114 Commercial Way
Spring Hill, Florida 34606

SCOPE:
This NOA is being issued under the applicable rules and regulations governing the use of construction materials. The documentation submitted has been reviewed by Miami-Dade County Product Control Division and accepted by the Board of Rules and Appeals (BORA) to be used in Miami Dade County and other areas where allowed by the Authority Having Jurisdiction (AHJ).

This NOA shall not be valid after the expiration date stated below. The Miami-Dade County Product Control Division (In Miami Dade County) and/or the AHJ (in areas other than Miami Dade County) reserve the right to have this product or material tested for quality assurance purposes. If this product or material fails to perform in the accepted manner, the manufacturer will incur the expense of such testing and the AHJ may immediately revoke, modify, or suspend the use of such product or material within their jurisdiction. BORA reserves the right to revoke this acceptance, if it is determined by Miami-Dade County Product Control Division that this product or material fails to meet the requirements of the applicable building code.

This product is approved as described herein, and has been designed to comply with the High Velocity Hurricane Zone of the Florida Building Code.

DESCRIPTION: **" 6.8" – HR " Aluminum Accordion Shutter**

APPROVAL DOCUMENT: Drawing No. 06-385, titled " 6.8 & HR Alum. Accordion Shutter ", sheets 1 through 13 of 13, prepared by Thornton-Tomasetti Group, dated June 30, 2005, last revision #1 dated December 16, 2005, signed and sealed by J.W. Knezevich, P.E., bearing the Miami-Dade County Product Control Approval stamp with the Notice of Acceptance number and approval date by the Miami-Dade County Product Control Division.

MISSILE IMPACT RATING: **Large and Small Missile Impact**

LABELING: Each unit shall bear a permanent label with the manufacturer's name or logo, city, state and the following statement: "Miami-Dade County Product Control Approved", unless otherwise noted herein.

RENEWAL of this NOA shall be considered after a renewal application has been filed and there has been no change in the applicable building code negatively affecting the performance of this product.

TERMINATION of this NOA will occur after the expiration date or if there has been a revision or change in the materials, use, and/or manufacture of the product or process. Misuse of this NOA as an endorsement of any product, for sales, advertising or any other purposes shall automatically terminate this NOA. Failure to comply with any section of this NOA shall be cause for termination and removal of NOA.

ADVERTISEMENT: The NOA number preceded by the words Miami-Dade County, Florida, and followed by the expiration date may be displayed in advertising literature. If any portion of the NOA is displayed, then it shall be done in its entirety.

INSPECTION: A copy of this entire NOA shall be provided to the user by the manufacturer or its distributors and shall be available for inspection at the job site at the request of the Building Official.

This NOA consists of this page 1, evidence submitted page E-1 as well as approval document mentioned above. The submitted documentation was reviewed by **Helmy A. Makar, P.E.**

Helmy A. Makar
06/29/2006

Florida Hurricane Products, Inc.

NOTICE OF ACCEPTANCE: EVIDENCE SUBMITTED

A. DRAWINGS

1. *Drawing No. 06-385, titled " 6.8 & HR Alum. Accordion Shutter ", sheets 1 through 13 of 13, prepared by Thornton-Tomasetti Group, dated June 30, 2005, last revision #1 dated December 16, 2005, signed and sealed by J.W. Knezevich, P.E.*

B. TESTS

1. *See Association's generic approval under 05-0217.*

C. CALCULATIONS

1. *See Association's generic approval under 05-0217.*

D. QUALITY ASSURANCE

1. *By Miami-Dade County Building Code Compliance Office.*

E. MATERIAL CERTIFICATIONS

1. *See Association's generic approval under 05-0217.*

F. STATEMENTS

1. *Release letter issued by the Southern Shutter Association, dated May 11, 2006, certifying this product to meet the criteria of product tested and approved, and allowing Florida Hurricane Products, Inc. to use the test results approved under Miami- Dade County Approval No. 05-0217, signed by Mr. Thomas B. Johnson.*
2. *Acknowledgment letter by Florida Hurricane Products, Inc., dated April 21, 2006, signed by Mr. Steven E. Smiley.*
3. *Letter by Thornton-Tomasetti Group., dated May 09, 2006, certifying that the drawing (No. 06-385) prepared for Florida Hurricane Products, Inc., signed and sealed by John W. Knezevich, P.E., is engineering wise identical to Southern Shutter Association, Inc. generic drawing (No. 05-376).*

Helmy A. Makar

Helmy A. Makar, P. E.
Product Control Examiner
NOA No 06-0511.11
Expiration Date: 06/29/2011
Approval Date: 06/29/2006

THESE APPROVAL DOCUMENTS REPRESENT
THE 6.8 AND THE HR ACCORDION SHUTTER SYSTEMS

GENERAL NOTES:

1. THESE APPROVAL DOCUMENTS REPRESENT A SHUTTER SYSTEM ANALYZED WITH THE PROVISION SET FOR THE ISSUANCE OF A NOTICE OF ACCEPTANCE (NOA) BY MIAMI-DADE COUNTY PRODUCT CONTROL DIVISION FOR THE HIGH VELOCITY HURRICANE ZONE (HVHZ) OF THE FLORIDA BUILDING CODE 2004 EDITION WITH 2005 SUPPLEMENT
2. NO INCREASE IN ALLOWABLE STRESS HAS BEEN USED IN THE DESIGN OF THESE PRODUCTS. WIND LOAD DURATION FACTOR Cd = 1.6 WAS USED FOR WOOD LAG SCREW DESIGN.
3. DETERMINE THE POSITIVE AND NEGATIVE DESIGN LOADS TO USE WHEN REFERENCING THESE DOCUMENTS IN ACCORDANCE WITH THE GOVERNING CODE AND GOVERNING WIND VELOCITY. FOR WIND LOAD CALCULATIONS IN ACCORDANCE WITH ASCE 7-02, A DIRECTIONALITY FACTOR OF Kd =0.85 SHALL BE USED.
4. THESE APPROVAL DOCUMENTS ARE GENERIC AND DO NOT INCLUDE INFORMATION FOR SITE-SPECIFIC APPLICATION OF THIS SHUTTER SYSTEM.
5. USE OF THESE APPROVAL DOCUMENTS SHALL COMPLY WITH CHAPTER 61G15-23 OF THE FLORIDA ADMINISTRATIVE CODE.
6. THESE APPROVAL DOCUMENTS ARE SUITABLE TO BE APPLIED BY THE CONTRACTOR PROVIDED THE CONTRACTOR DOES NOT DEVIATE FROM THE CONDITIONS DETAILED HEREIN AND THE CONTRACTOR VERIFIES THAT THE EXISTING STRUCTURE DOES NOT DEVIATE IN EITHER FORM OR MATERIAL FROM THE STRUCTURAL SUBSTRATES DETAILED HEREIN.
7. ANY MODIFICATIONS OR ADDITIONS TO THESE APPROVAL DOCUMENTS WILL VOID THE APPROVAL DOCUMENTS.
8. WHEN THE SITE CONDITIONS DEVIATE FROM THESE APPROVAL DOCUMENTS, THE BUILDING OFFICIAL MAY ELECT ONE OF THE FOLLOWING OPTIONS:
   - A) REQUIRE THAT SITE SPECIFIC DOCUMENTS BE PREPARED, SIGNED, DATED AND SEALED BY A LICENSED ENGINEER OR REGISTERED ARCHITECT, WHICH DETAIL AND JUSTIFY THE DEVIATION. AS A CONDITION TO THE BUILDING OFFICIAL GRANTING HIS/HER APPROVAL.
   - B) REQUIRE THAT A ONE-TIME SITE SPECIFIC APPROVAL BE APPLIED FOR AND SECURED FROM THE MIAMI-DADE COUNTY PRODUCT CONTROL DIVISION.

   WHEN THE SITE CONDITION DEVIATIONS OCCUR WITHIN THE HIGH VELOCITY HURRICANE ZONE AREAS, ONLY OPTION "B" SHALL BE ACCEPTED BY THE BUILDING OFFICIAL.
9. EACH SHUTTER ASSEMBLY SHALL BE PERMANENTLY LABELED AS FOLLOWS:

   FLORIDA HURRICANE PRODUCTS, INC.
   SPRING HILL, FLORIDA
   MIAMI-DADE COUNTY PRODUCT CONTROL APPROVED
10. ALL EXTRUSIONS SHOWN SHALL BE 6063-T6 ALUMINUM ALLOY, U.O.N., WITH A MINIMUM Fy OF 30.125 K.S.I.
11. ALL BOLTS AND WASHERS SHALL BE STAINLESS STEEL WITH A MINIMUM TENSILE STRENGTH OF 60 K.S.I., U.O.N. POP RIVETS SHALL BE 1/4"Ø OR 3/16"Ø 5052 ALUM. ALLOY.
12. ALL SHUTTERS SHALL HAVE A LOCKING MECHANISM CONSISTING OF THUMBSCREW, PUSH LOCK OR BOX LOCK AT CENTER OR SIDE CLOSURE.
13. TOP AND BOTTOM DETAILS MAY BE INTERCHANGED AS FIELD CONDITIONS REQUIRE.
14. FLOOR TRACKS MAY BE REMOVABLE AT NON-STACKING LOCATIONS. USE REMOVABLE ANCHORS.
15. ALL EXTRUSIONS CAN BE USED FOR THE 6.8 OR THE HR ACCORDION SHUTTER SYSTEMS, U.O.N.
16. THE HR ACCORDION SHUTTER SLAT HAS A BULGE @ CENTER OF SLAT TO DISTINGUISH FROM THE 6.8 ACCORDION SHUTTER SLAT.

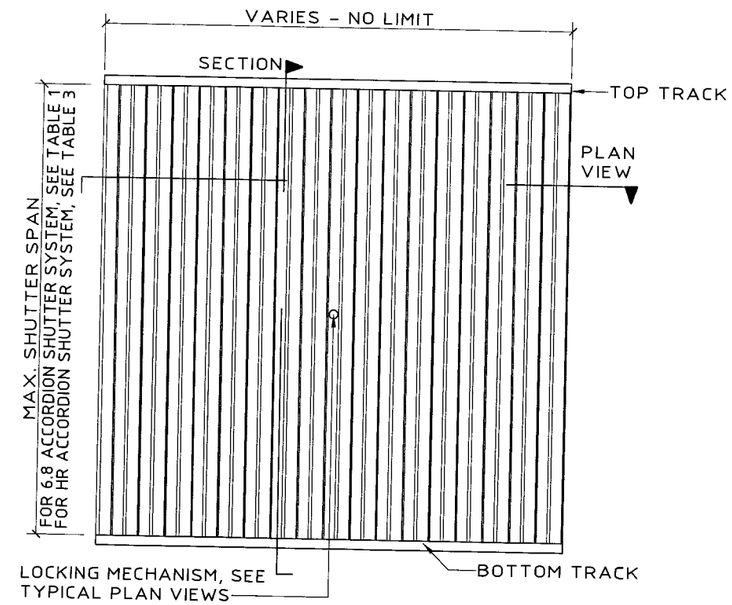

TYPICAL ACCORDION SHUTTER ELEVATION
N.T.S.

Approved as complying with the Florida Building Code
Date 06/29/2006
NOA# 06-0511.11
Miami Dade Product Control Division
By Helena A. Nelson

Thornton-Tomasetti Group
330 N. Andrews Ave., Suite 450 • Ft. Lauderdale, FL 33301
Tel. (954) 522-3690 • Fax (954) 522-3691 • COA # 7519
Website: www.TheTTGroup.com

Copyright © 2006 Thornton-Tomasetti Group, Inc.
6.8 & HR SYSTEMS LICENSED BY SOUTHERN SHUTTER ASSOCIATION

6.8 & HR ALUM. ACCORDION SHUTTERS

FLORIDA HURRICANE PRODUCTS, Inc.
5114 COMMERCIAL WAY
SPRING HILL, FL 34606
PHONE: (352) 596-8583
FAX: (352) 596-8535

J.W. Knezevich
Professional Engineer
FL License No.: PE 0041961

APR 24 2006

revisions

no	date	by	description
0	06/30/05	NW	PREVIOUSLY DRAWING NO. 03-258
1	12/16/05	VJK	NEW COMPONENTS

SSA I.D. # 060424053760

date 06/30/2005
scale AS NOTED
drawn by MCR
design by JWK
checked by JWK
drawing no. 06-385
sheet 1 of 13

Print Information: P:\FL1\KA\CADD\Associations\SSA\FHPI\06-385\R1-sub\06-385-01.dwg MCantu 04/24/2006 01:14:49pm 04/24/06 13:12

ACCORDION SHUTTER COMPONENTS
FOR 6.8 & HR ACCORDION SHUTTER SYSTEMS

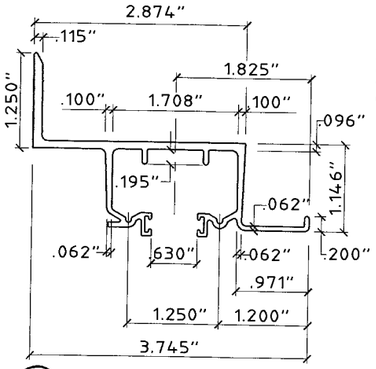

1 WALL HEADER (6.8 ONLY)
SCALE: HALF SIZE

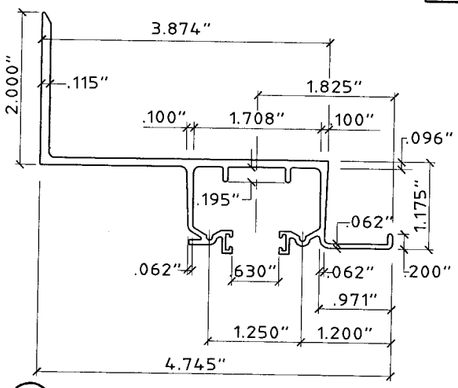

2 BUILD OUT WALL HEADER (6.8 ONLY)
SCALE: HALF SIZE

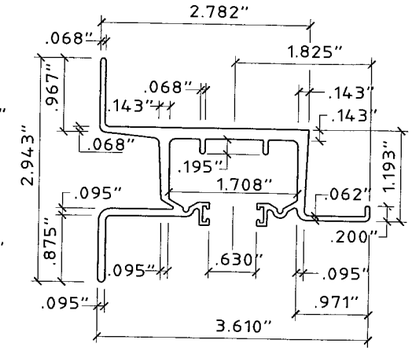

3 HEAVY WALL HEADER
SCALE: HALF SIZE

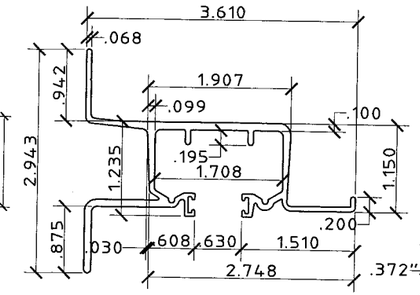

4 LITE WALL HEADER
SCALE: HALF SIZE

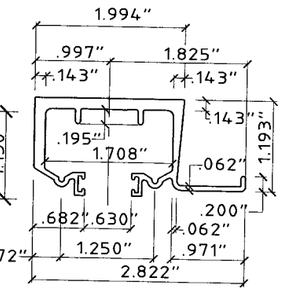

5 HEAVY HEADER
SCALE: HALF SIZE

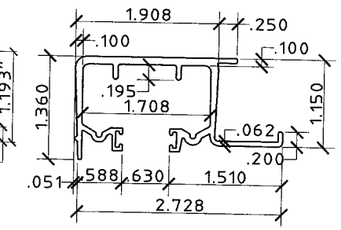

6 LITE HEADER
SCALE: HALF SIZE

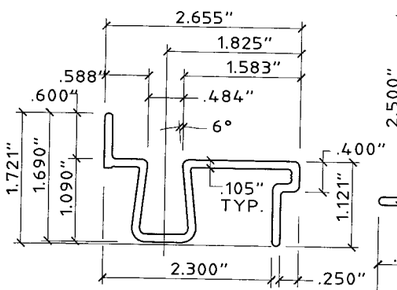

7 BASE SILL
SCALE: HALF SIZE

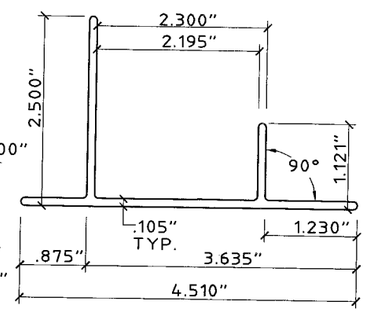

8 BASE TRACK
SCALE: HALF SIZE

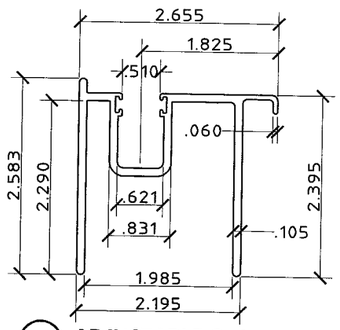

9 ADJUSTABLE SILL
SCALE: HALF SIZE

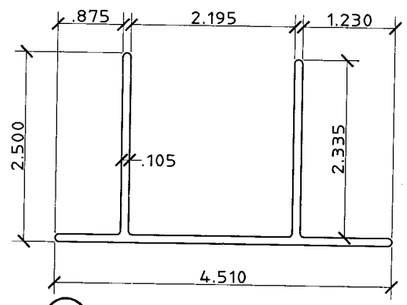

10 ADJUSTABLE SILL BASE
SCALE: HALF SIZE

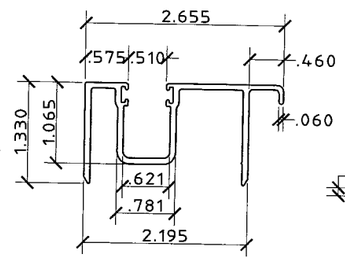

11 ADJUSTABLE SILL
SCALE: HALF SIZE

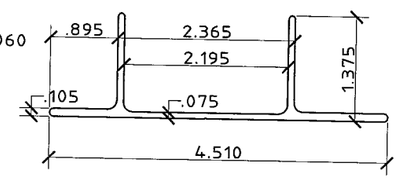

12 ADJUSTABLE SILL BASE
SCALE: HALF SIZE

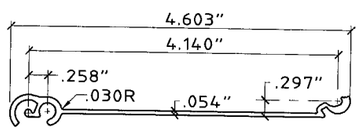

13 TYP. 6.8 SLAT
SCALE: HALF SIZE

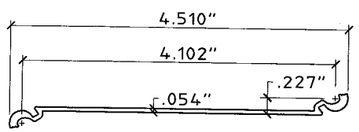

15 ALT. 6.8 SLAT
SCALE: HALF SIZE

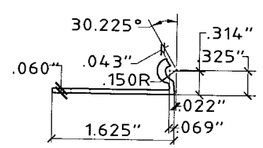

17 6.8 STARTER
SCALE: HALF SIZE

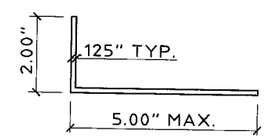

19 ANGLE (6.8 ONLY)
SCALE: 3" = 1' - 0"

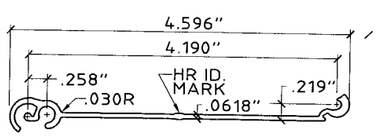

14 TYP. HR SLAT
SCALE: HALF SIZE

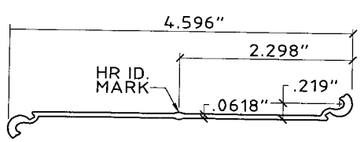

16 ALT. HR SLAT
SCALE: HALF SIZE

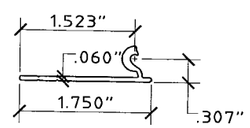

18 HR STARTER
SCALE: HALF SIZE

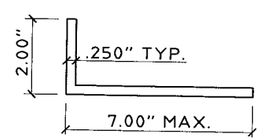

20 ANGLE (HR ONLY)
SCALE: HALF SIZE

Approved as complying with the Florida Building Code
Date 06/29/2006
NOA# 06-0511.11
Miami Dade Product Control Division
By Helena A. Molina

Thornton•Tomasetti Group
330 N. Andrews Ave., Suite 450 • Ft. Lauderdale, FL 33301
Tel. (954) 522-3690 • Fax (954) 522-3691 • COA # 7519
Website: www.TheTTGroup.com

Copyright © 2006 Thornton-Tomasetti Group, Inc.
6.8 & HR SYSTEMS LICENSED BY SOUTHERN SHUTTER ASSOCIATION

6.8 & HR ALUM. ACCORDION SHUTTERS

5114 COMMERCIAL WAY
SPRING HILL, FL 34606
PHONE: (352) 596-8583
FAX: (352) 596-8535

FLORIDA HURRICANE PRODUCTS, Inc.

J.W. Knezevich
Professional Engineer
FL License No.: PE 0041961

APR 24 2006

revisions

no	date	by	description
0	06/30/05	NW	PREVIOUSLY DRAWING NO. 03-258
1	12/16/05	VJK	NEW COMPONENTS

SSA I.D. # 0604240537 6D

date 06/30/2005
scale AS NOTED
drawn by MCR
design by JWK
checked by JWK
drawing no. 06-385
sheet 2 of 13

Print Information: P:\FL1\KA\CADD\Associations\SSA\FHP\06-385\R1-sub\06-385-02.dwg MCantu 04/24/2006 01:14:54pm 04/24/06 13:12

ACCORDION SHUTTER COMPONENTS
FOR 6.8 & HR ACCORDION SHUTTER SYSTEMS

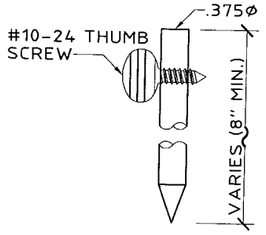

FOR USE WITH (33) AND (34) ONLY

(21) SLIDE ROD
SCALE: HALF SIZE

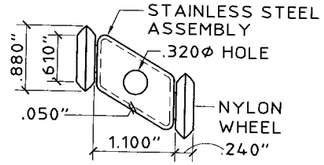

TYP. AT EVERY OTHER INSIDE JOINT AT TOP.

(22) ROLLER ASSEMBLY
SCALE: HALF SIZE

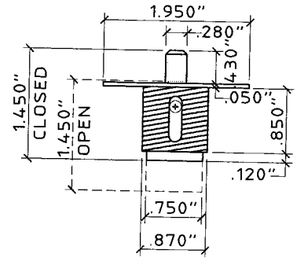

(23) BRASS PUSH LOCK
SCALE: HALF SIZE

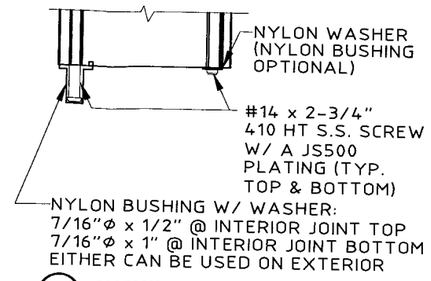

(24) BUSHING ASSEMBLY DETAIL
SCALE: HALF SIZE

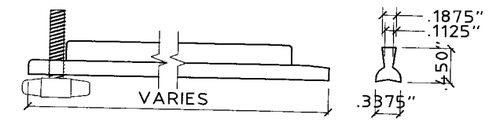

FOR 6.8 & HR WHERE LOCK PINS ARE USED, THEY ARE ENGAGED IN THE STACKED POSITION & AREN'T REQ'D IN THE CLOSED POSITION.

(25) ALUMINUM OR PVC LOCK PIN (NOT REQUIRED)
SCALE: HALF SIZE

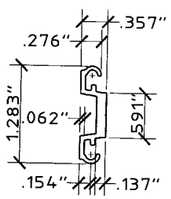

(26) CENTER BOX INSERT
SCALE: HALF SIZE

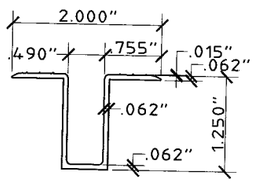

(27) RECESS SILL (6.8 ONLY)
SCALE: HALF SIZE

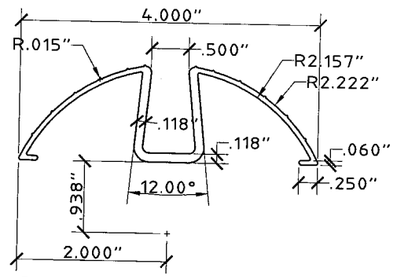

(28) DECORATIVE FLOOR TRACK (6.8 ONLY)
SCALE: HALF SIZE

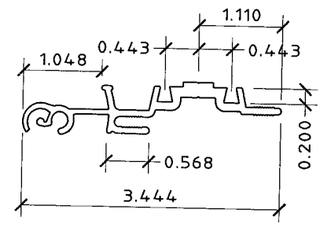

(29a) (6.8 ONLY) MALE/FEMALE LOCK
SCALE: HALF SIZE

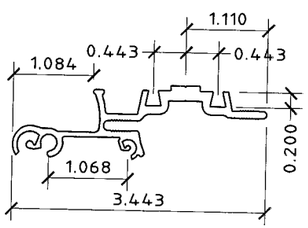

(29b) (6.8 ONLY) MALE/FEMALE LOCK
SCALE: HALF SIZE

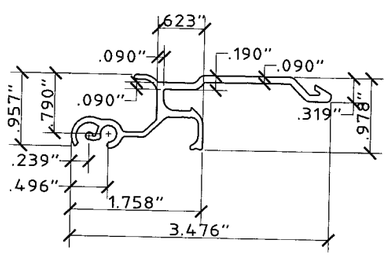

(30) (6.8 ONLY) UNIMATE LOCK
SCALE: HALF SIZE

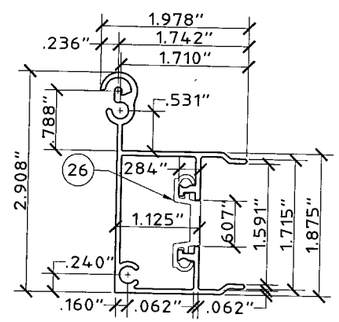

(31) MALE BOX CENTER
SCALE: HALF SIZE

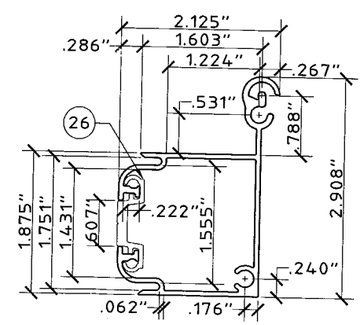

(32) FEMALE BOX CENTER
SCALE: HALF SIZE

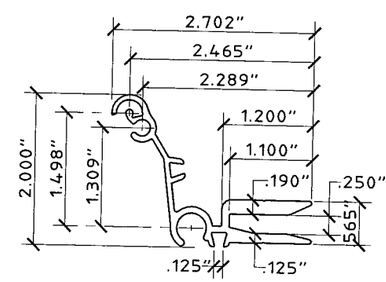

(33) CENTER MATE 1
SCALE: HALF SIZE

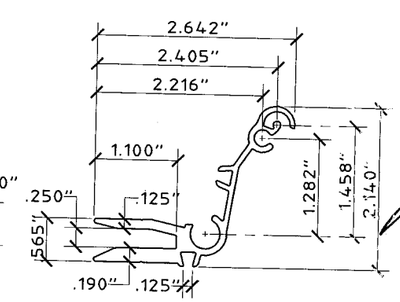

(34) CENTER MATE 2
SCALE: HALF SIZE

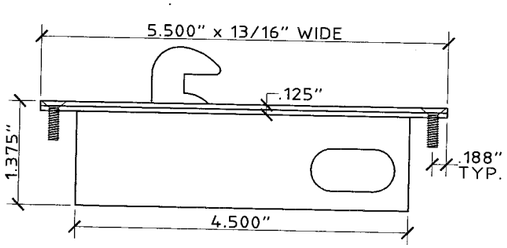

(35) DELTA MODEL 2022 INDUSTRIAL SYSTEMS BOX LOCK
SCALE: HALF SIZE

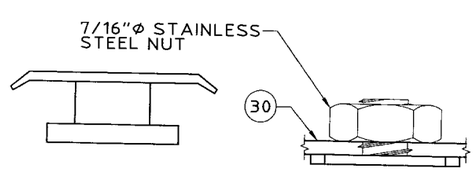

(36) (6.8 ONLY) T-ADAPTER (OPTIONAL)
SCALE: HALF SIZE

5/16-18 STAINLESS STEEL THREADED INTERNAL FOR # 30

(37) (6.8 ONLY) THREADED INSERT
SCALE: FULL SIZE

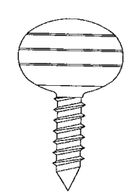

1/4-20x1 OR 5/16-18x1 MACHINE SCREW STAINLESS STEEL

(38) THUMB SCREW
SCALE: FULL SIZE

Approved as complying with the Florida Building Code
Date 06/29/2006
NOA# 06-0511.11
Miami Dade Product Control Division
By Helena A. Alvarez

Thornton-Tomasetti Group
330 N. Andrews Ave., Suite 450 • Ft. Lauderdale, FL 33301
Tel. (954) 522-3690 • Fax (954) 522-3691 • COA # 7519
Website: www.TheTTGroup.com

Copyright © 2006 Thornton-Tomasetti Group, Inc.
6.8 & HR SYSTEMS LICENSED BY SOUTHERN SHUTTER ASSOCIATION

6.8 & HR ALUM. ACCORDION SHUTTERS

5114 COMMERCIAL WAY
SPRING HILL, FL 34606
PHONE: (352) 596-8583
FAX: (352) 596-8535

FLORIDA HURRICANE PRODUCTS, Inc.

J.W. Knezevich
Professional Engineer
FL License No.: PE 0041961

APR 24 2006

revisions

no	date	by	description
0	06/30/05	NW	PREVIOUSLY DRAWING NO. 03-258
1	12/16/05	VJK	NEW COMPONENTS

SSA I.D. # 0604240537 6D

date 06/30/2005
scale AS NOTED
drawn by MCR
design by JWK
checked by JWK
drawing no. 06-385
sheet 3 of 13

Print Information: P:\FL1\KA\CADD\Associations\SSA\FHP\06-385\R1-sub\06-385-03.dwg MCantu 04/24/2006 01:14:59pm 04/24/06 13:12

6.8 ACCORDION SHUTTER

NOT APPLICABLE TO HR ACCORDION SHUTTER

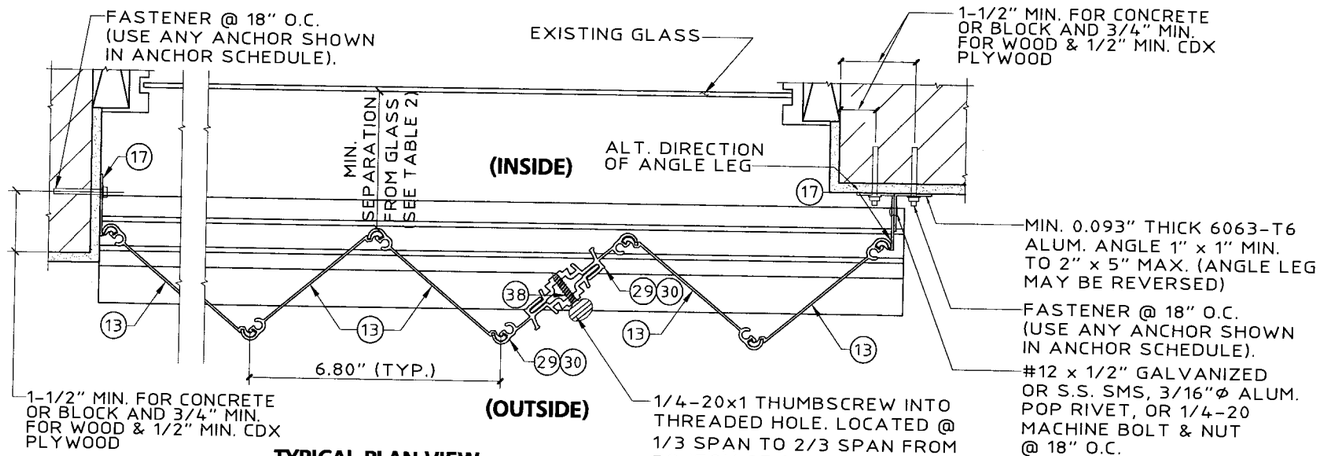

TYPICAL PLAN VIEW

SCALE: 3" = 1'-0"

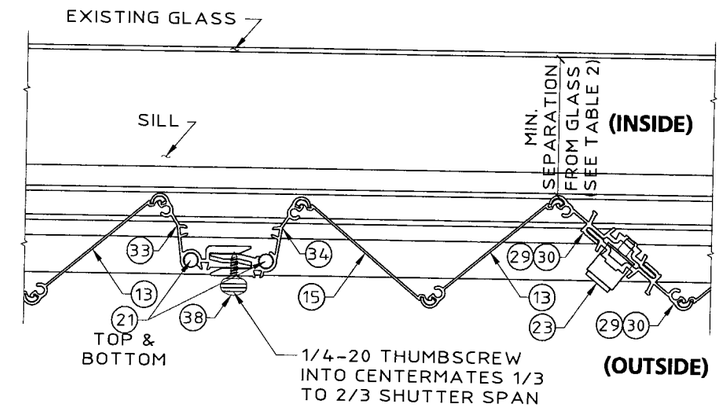

MULTIPLE SHUTTER ASSEMBLY

SCALE: 3" = 1'-0"

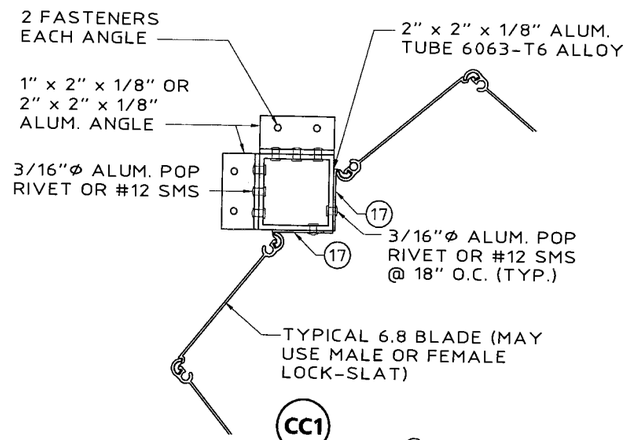

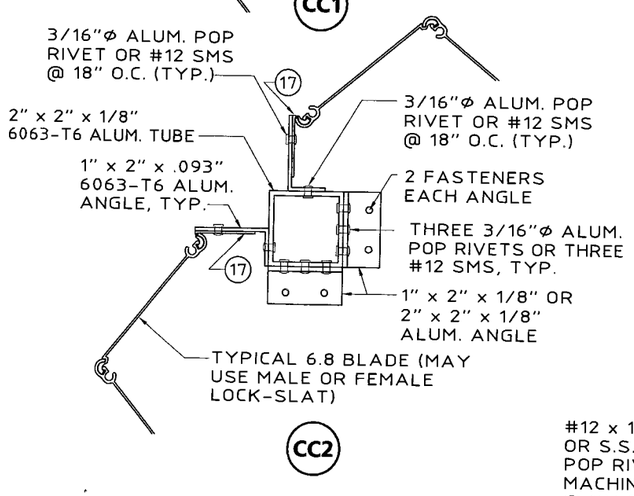

TYPICAL CORNER CLOSURE DETAILS

SCALE: 3" = 1'-0"

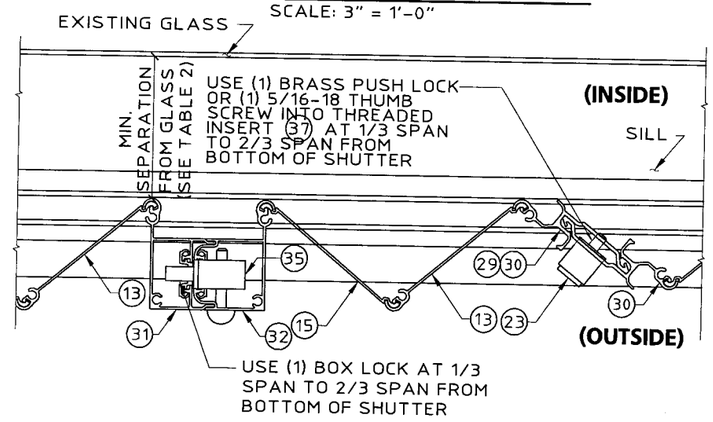

MULTIPLE SHUTTER ASSEMBLY

SCALE: 3" = 1'-0"

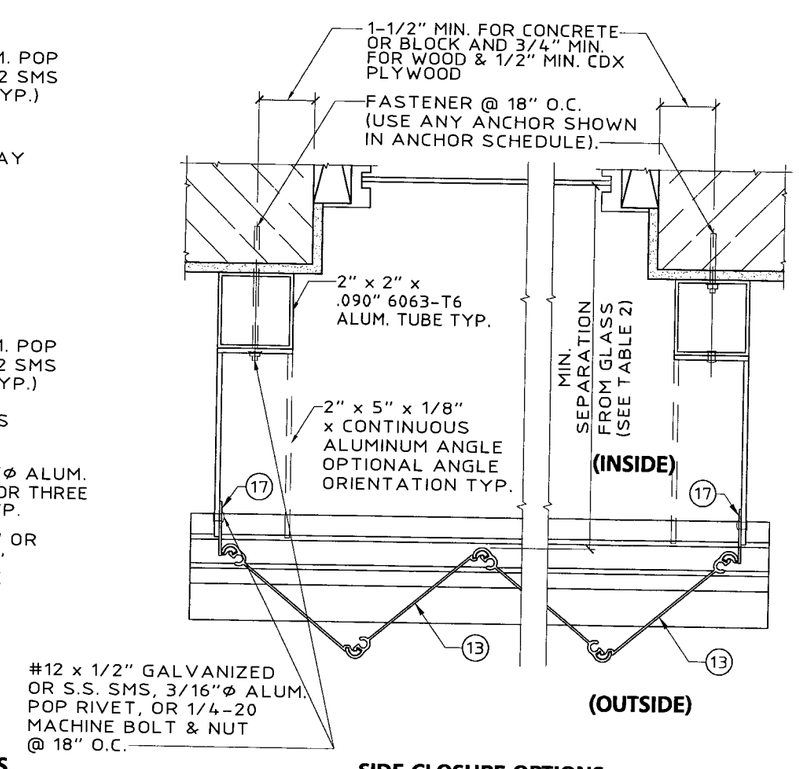

SIDE CLOSURE OPTIONS

SCALE: 3" = 1'-0"

Approved as complying with the Florida Building Code
Date 06/29/2006
NOA# 06-0511.11
Miami Dade Product Control Division
By Helena A. Molina

Thornton-Tomasetti Group
330 N. Andrews Ave., Suite 450 • Ft. Lauderdale, FL 33301
Tel. (954) 522-3690 • Fax (954) 522-3691 • COA # 7519
Website: www.TheTTGroup.com

Copyright © 2006 Thornton-Tomasetti Group, Inc.
6.8 & HR SYSTEMS LICENSED BY SOUTHERN SHUTTER ASSOCIATION

6.8 & HR ALUM. ACCORDION SHUTTERS

5114 COMMERCIAL WAY
SPRING HILL, FL 34606
PHONE: (352) 596-8583
FAX: (352) 596-8535
FLORIDA HURRICANE PRODUCTS, Inc.
J.W. Knezevich
Professional Engineer
FL License No.: PE 0041961

APR 24 2006

revisions

no	date	by	description
0	06/30/05	NW	PREVIOUSLY DRAWING NO. 03-258
1	12/16/05	VJK	NEW COMPONENTS

SSA I.D. # 0604240537 6D

date 06/30/2005

scale AS NOTED | drawn by MCR

design by JWK | checked by JWK

drawing no. 06-385

sheet 4 of 13

Print Information: P:\FL1\KA\CADD\Associations\SSA\FHP\06-385\R1-sub\06-385-04.dwg MCantu 04/24/2006 01:15:04pm 04/24/06 13:12

6.8 ACCORDION SHUTTER

NOT APPLICABLE TO HR ACCORDION SHUTTER

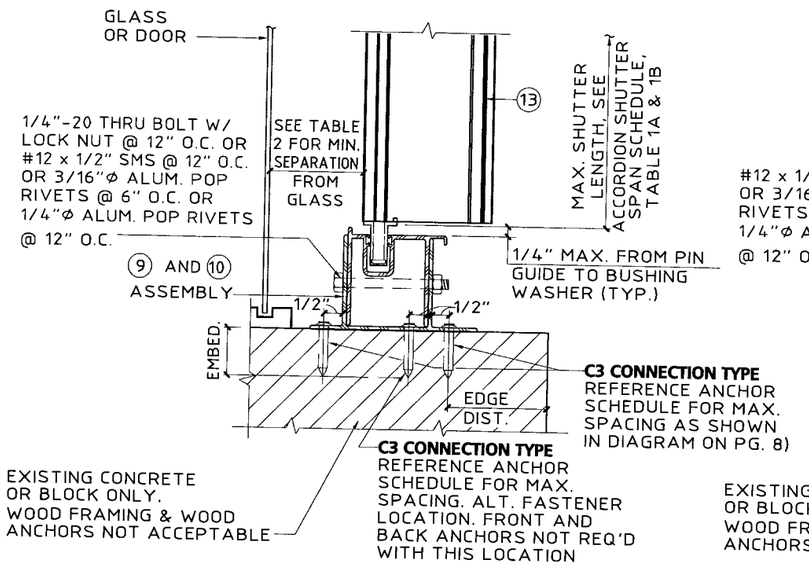

A INSIDE MOUNT SECTION
SCALE : 3"= 1'- 0"

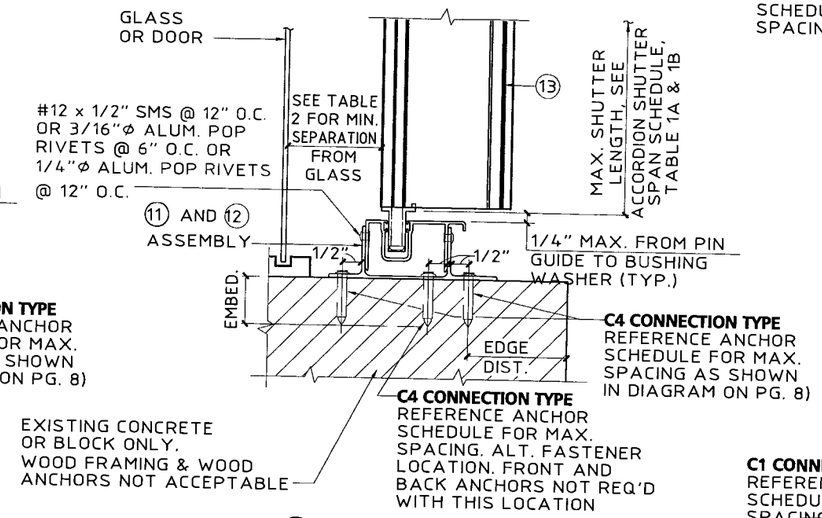

B INSIDE MOUNT SECTION
SCALE : 3"= 1'- 0"

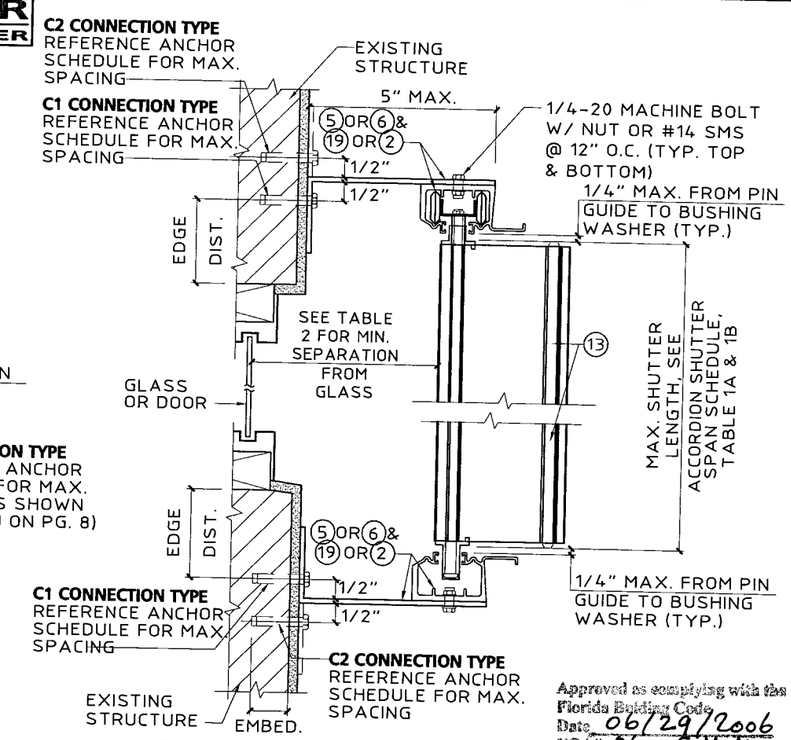

C BUILD OUT MOUNT SECTION
SCALE : 3"= 1'- 0"

Approved as complying with the Florida Building Code
Date 06/29/2006
NOA# 06-0511.11
Miami Dade Product Control Division
By Helmy A. Abdelsalam

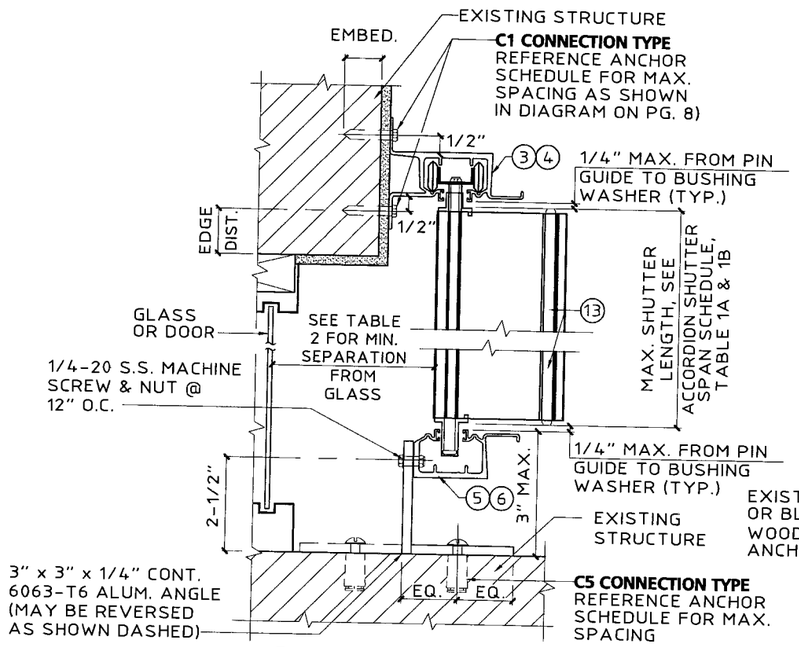

D WALL MOUNT SECTION
SCALE : 3"= 1'- 0"

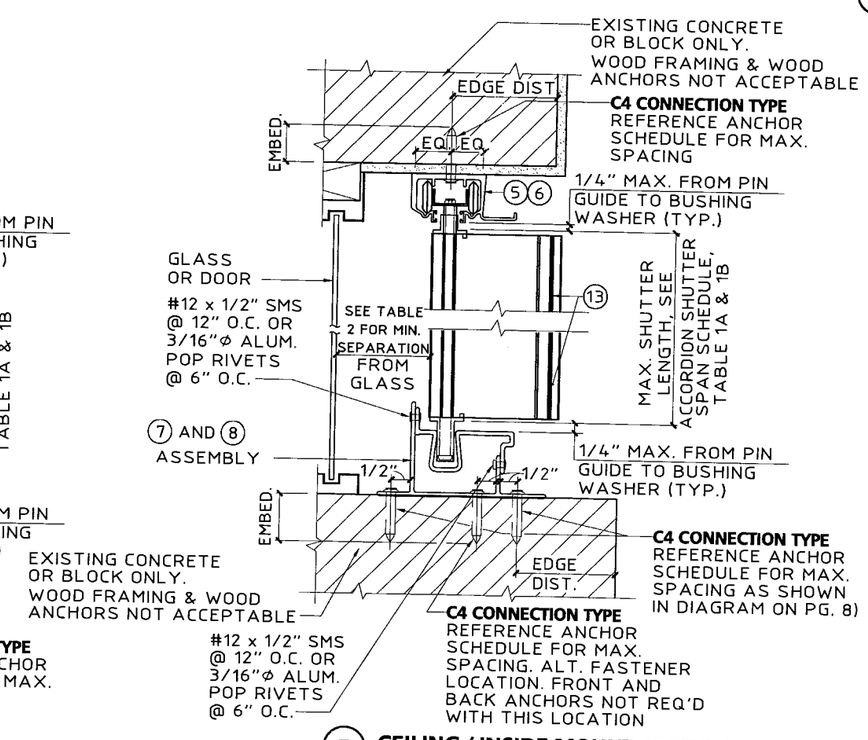

E CEILING / INSIDE MOUNT SECTION
SCALE : 3"= 1'- 0"

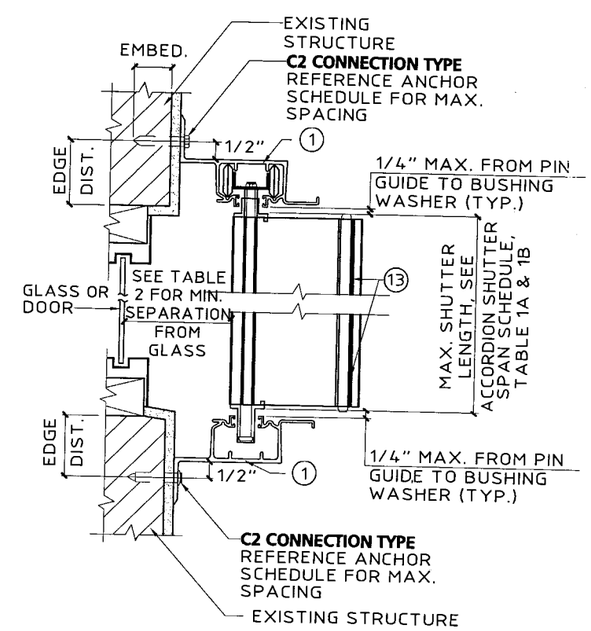

F WALL MOUNT SECTION
SCALE : 3"= 1'- 0"

Thornton-Tomasetti Group
330 N. Andrews Ave., Suite 450 • Ft. Lauderdale, FL 33301
Tel. (954) 522-3690 • Fax (954) 522-3691 • COA # 7519
Website: www.TheTTGroup.com

Copyright © 2006 Thornton-Tomasetti Group, Inc.
6.8 & HR SYSTEMS LICENSED BY SOUTHERN SHUTTER ASSOCIATION

6.8 & HR ALUM. ACCORDION SHUTTERS

5114 COMMERCIAL WAY
SPRING HILL, FL 34606
PHONE: (352) 596-8583
FAX: (352) 596-8535

FLORIDA HURRICANE PRODUCTS, Inc.

J.W. Kruezevich
Professional Engineer
FL License No.: PE 0041961

APR 24 2006

revisions

no	date	by	description
0	06/30/05	NW	PREVIOUSLY DRAWING NO. 03-258
1	12/16/05	VJK	NEW COMPONENTS

SSA I.D. # 0604240537 6D

date 06/30/2005
scale AS NOTED
drawn by MCR
design by JWK
checked by JWK
drawing no. 06-385
sheet 5 of 13

Print Information: P:\FL1\KA\CADD\Associations\SSA\FHPI\06-385\R1-sub\06-385-05.dwg MCantu 04/24/2006 01:15:10pm 04/24/06 13:12

6.8 ACCORDION SHUTTER

NOT APPLICABLE TO HR ACCORDION SHUTTER

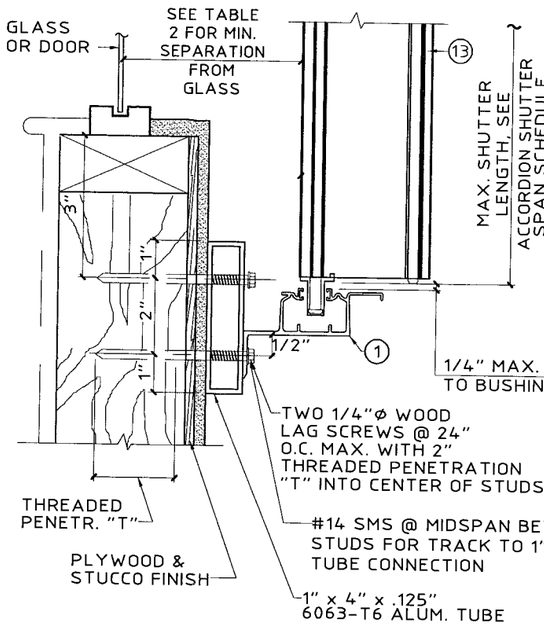

NOTE: THIS DETAIL MAY BE USED AT TOP MAX. DESIGN LOAD = 72 P.S.F.

(G) WALL MOUNT SECTION

SCALE : 3"= 1'- 0"

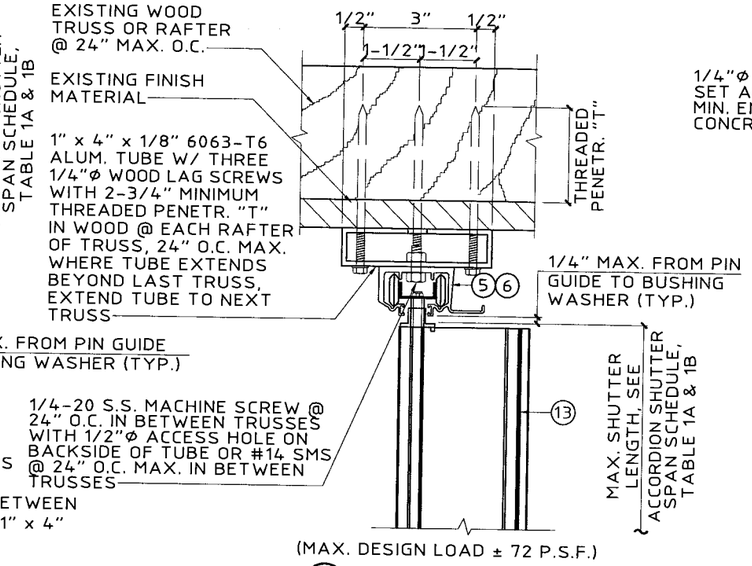

(MAX. DESIGN LOAD ± 72 P.S.F.)

(H) TRUSS MOUNT SECTION

SCALE : 3"= 1'- 0"

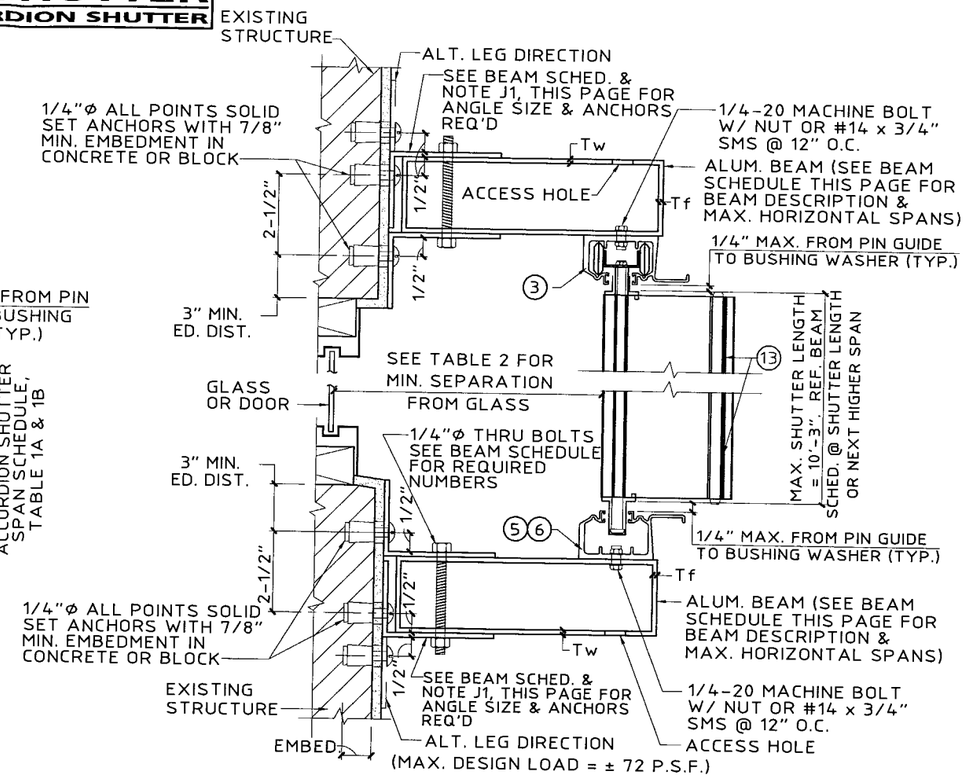

(MAX. DESIGN LOAD = ± 72 P.S.F.)

(J) BUILD-OUT MOUNT SECTION

SCALE : 3"= 1'- 0"

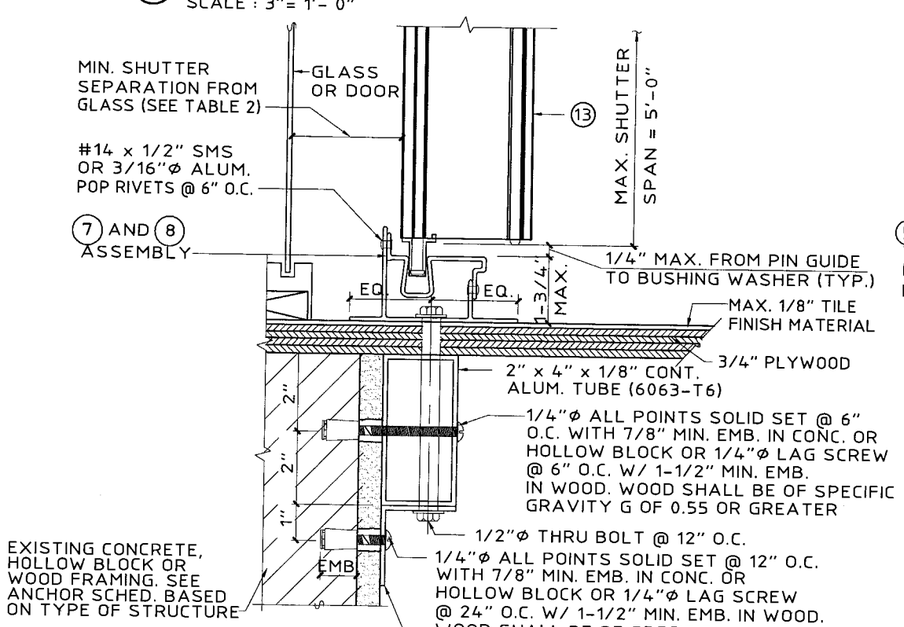

(MAX. DESIGN LOAD ± 72 P.S.F.)

(K) PASS THRU DETAIL

SCALE : 3"= 1'- 0"

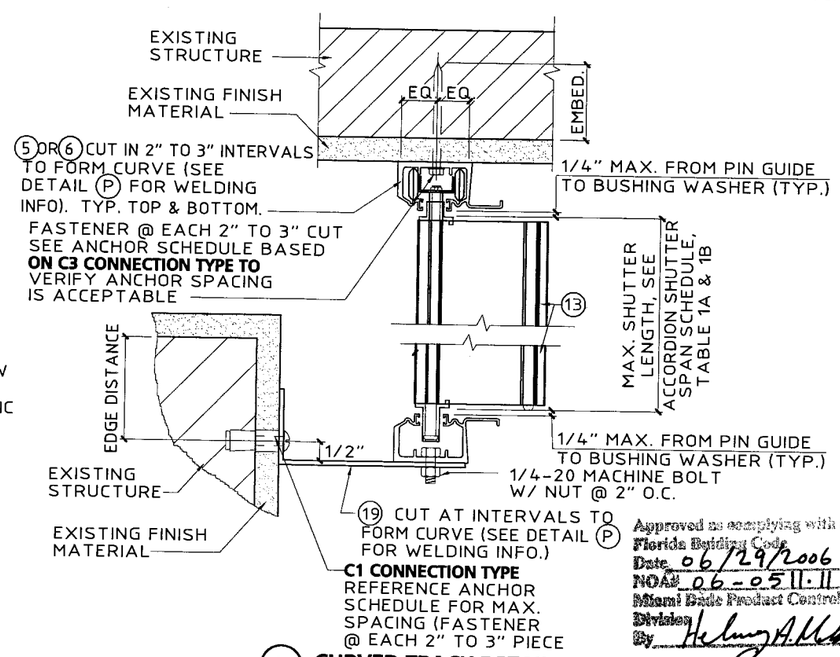

(L) CURVED TRACK DETAIL

SCALE : 3"= 1'- 0"

Approved as complying with the Florida Building Code
Date 06/29/2006
NOA# 06-0511.11
Miami Dade Product Control Division
By Helmy A. Ali

*BEAM SCHEDULE

DESCRIPTION	SHUTTER SPAN	TOP BEAM	BOTTOM BEAM	No. OF THRU BOLT TOP BEAM	No. OF THRU BOLT BOT. BEAM	No. OF 1/4"Ø ALL POINTS ANCHORS +A. ANGLE TOP BEAM	No. OF 1/4"Ø ALL POINTS ANCHORS +A. ANGLE BOT. BEAM
2" x 5" BB Tw = .125" Tf = .125"	5'-0"	9'-0"	9'-5"	2	2	2	2
	8'-0"	8'-0"	8'-1"	2	2	2	2
	10'-3"	7'-6"	7'-5"	2	2	2	2
2" x 7" LB Tw = .072" Tf = .130"	5'-0"	8'-9"	11'-8"	2	2	2	2
	8'-0"	7'-9"	9'-6"	2	2	2	2
	10'-3"	7'-4"	8'-5"	2	2	2	3
2" x 9" LB Tw = .072" Tf = .224"	5'-0"	9'-3"	15'-2"	2	2	2	2
	8'-0"	8'-3"	12'-2"	2	3	2	3
	10'-3"	7'-9"	10'-10"	2	3	2	3

*

BEAM SCHEDULE NOTES:

1. USE BEAM SCHEDULE FOR DETAIL (J).
2. TOP & BOTTOM BEAMS MAY BE USED TOGETHER OR IN COMBINATION WITH OTHER CONNECTION DETAILS. WHERE USED TOGETHER, BEAM MUST BE LIMITED TO TOP BEAM SPANS.
3. LAP BEAMS (LB) SHALL BE INSTALLED WITH #14 TEK SCREWS @ 8" O.C. AT CENTER OF EACH 2" FLANGE.
4. BB DENOTES BOX BEAM.

NOTE J1:

2"x3"x1/4"6063-T6 ALUMINUM ANGLE TOP & BOTTOM.
USE 6" LONG ANGLES FOR TWO REQUIRED THRU BOLTS OR 1/4"Ø ALL POINTS ANCHORS IN EACH ANGLE.
USE 9" LONG ANGLES FOR THREE REQUIRED THRU BOLTS OR 1/4"Ø ALL POINTS ANCHORS IN EACH ANGLE.

Thornton-Tomasetti Group
330 N. Andrews Ave., Suite 450 • Ft. Lauderdale, FL 33301
Tel. (954) 522-3690 • Fax (954) 522-3691 • COA # 7519
Website: www.TheTTGroup.com

Copyright © 2006 Thornton-Tomasetti Group, Inc.
6.8 & HR SYSTEMS LICENSED BY SOUTHERN SHUTTER ASSOCIATION

6.8 & HR ALUM. ACCORDION SHUTTERS

5114 COMMERCIAL WAY
SPRING HILL, FL 34606
PHONE: (352) 596-8583
FAX: (352) 596-8535

FLORIDA HURRICANE PRODUCTS, Inc.

J.W. Knezevich
Professional Engineer
FL License No.: PE 0041961

APR 24 2006

SSA I.D. # 0604240537 6D

revisions

no	date	by	description
0	06/30/05	NW	PREVIOUSLY DRAWING NO. 03-238
1	12/16/05	VJK	NEW COMPONENTS

date 06/30/2005
scale AS NOTED
drawn by MCR
design by JWK
checked by JWK
drawing no. 06-385
sheet 6 of 13

Print Information: P:\FL1\KA\CADD\Associations\SSA\FHP\06-385\R1-sub\06-385-06.dwg MCantu 04/24/2006 01:15:15pm 04/24/06 13:12

6.8 ACCORDION SHUTTER

NOT APPLICABLE TO HR ACCORDION SHUTTER

TABLE 1A — ACCORDION SHUTTER SPAN SCHEDULE FOR ALL LOCKING CONDITIONS, EXCEPT FOR UNIMATE LOCK

DESIGN WIND LOAD W (P.S.F.)	POSITIVE WIND LOAD L max. (FT – IN)	NEGATIVE WIND LOAD L max. (FT – IN)
30.0	12–9	12–9
35.0	12–4	12–9
40.0	11–11	12–9
45.0	11–7	12–9
50.0	11–3	12–9
55.0	11–0	12–9
60.0	10–9	12–4
65.0	10–6	11–6
70.0	10–4	10–8
72.0	10–3	10–4
75.0	10–2	9–11
80.0	9–11	9–4
90.0	9–7	8–4
100.0	9–3	8–3
110.0	9–0	8–3
120.0	8–8	8–3
130.0	8–4	8–3
133.0	8–3	8–3
140.0	7–11	7–11
150.0	7–5	7–5
160.0	6–11	6–11
170.0	6–6	6–6
180.0	6–2	6–2
190.0	5–10	5–10
200.0	5–6	5–6

TABLE 1B — ACCORDION SHUTTER SPAN SCHEDULE FOR UNIMATE LOCK ONLY

DESIGN WIND LOAD W (P.S.F.)	POSITIVE WIND LOAD L max. (FT – IN)	NEGATIVE WIND LOAD L max. (FT – IN)
30.0	12–9	12–9
35.0	12–4	12–9
40.0	11–11	12–9
45.0	11–7	12–5
50.0	11–2	11–2
55.0	10–9	10–9
60.0	10–4	10–4
65.0	10–0	10–0
70.0	9–8	9–8
75.0	9–5	9–5
80.0	9–2	9–2
85.0	9–0	9–0
90.0	8–11	8–11
100.0	8–9	8–9
110.0	8–7	8–7
120.0	8–5	8–5
130.0	8–3	8–3
140.0	7–7	7–7
150.0	7–1	7–1
160.0	6–8	6–8
170.0	6–3	6–3
180.0	5–11	5–11
190.0	5–7	5–7
200.0	5–4	5–4

TABLE 1A & 1B NOTES:

1. DETERMINE BOTH THE POSITIVE AND THE NEGATIVE WIND LOADS. CHECK THEIR RESPECTIVE SPANS AND USE THE LESSER VALUE OF THE TWO.
2. FOR DESIGN LOADS BETWEEN TABULATED VALUES USE NEXT HIGHER LOAD OR LINEAR INTERPOLATION MAY BE USED TO DETERMINE ALLOWABLE SPANS.

TABLE 2 NOTE:

1. ENTER TABLE 2 WITH POSITIVE DESIGN LOAD TO DETERMINE MIN. STORM SHUTTER SEPARATION FROM GLASS.

TABLE 2 — MINIMUM SHUTTER SEPARATION FROM GLASS

POSITIVE DESIGN LOAD (W) (P.S.F.)	ACTUAL SHUTTER SPAN (L) (FT – IN)	MIN. SEPARATION FROM GLASS FOR INSTALLATIONS LESS THAN OR EQUAL TO 30' ABOVE GRADE (IN.)	MIN. SEPARATION FROM GLASS FOR INSTALLATIONS GREATER THAN 30' ABOVE GRADE (IN.)
40.0	8–3	3–1/8	1–5/8
	10–0	3–3/4	2–1/8
	11–11	3–3/4	3
50.0	8–3	3–1/8	1–3/4
	10–0	3–3/4	2–3/8
	11–3	3–3/4	3
60.0	5–0	3–1/8	1–1/4
	8–3	3–1/8	1–7/8
	10–9	3–3/4	3
70.0	5–0	3–1/8	1–1/8
	8–3	3–1/8	1–7/8
	10–4	3–3/4	3
80.0	6–0	3–1/8	1–3/8
	8–3	3–1/8	2–1/8
	9–4	3–3/4	2–5/8
90.0	5–0	3–1/8	1–3/8
	7–0	3–1/8	1–5/8
	8–3	3–1/8	2–1/8
100.0	5–0	3–1/8	1–3/8
	7–0	3–1/8	1–3/4
	8–3	3–1/8	2–1/4
110.0	5–0	3–1/8	1–3/8
	7–0	3–1/8	1–7/8
	8–3	3–1/8	2–3/8
120.0	5–0	3–1/8	1–3/8
	7–0	3–1/8	1–7/8
	8–3	3–1/8	2–1/4
130.0	5–0	3–1/8	1–3/8
	7–0	3–1/8	1–7/8
	8–3	3–1/8	2–1/2

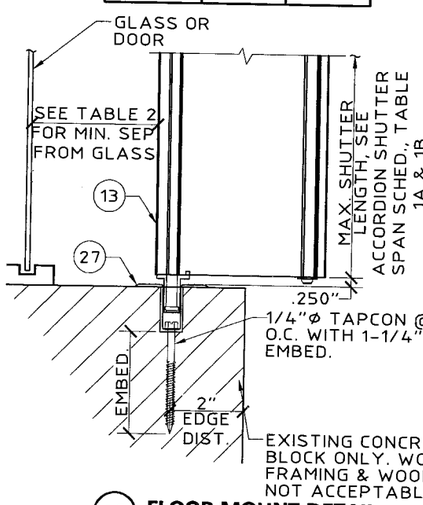

(M) FLOOR MOUNT DETAIL
SCALE : 3"= 1'- 0"

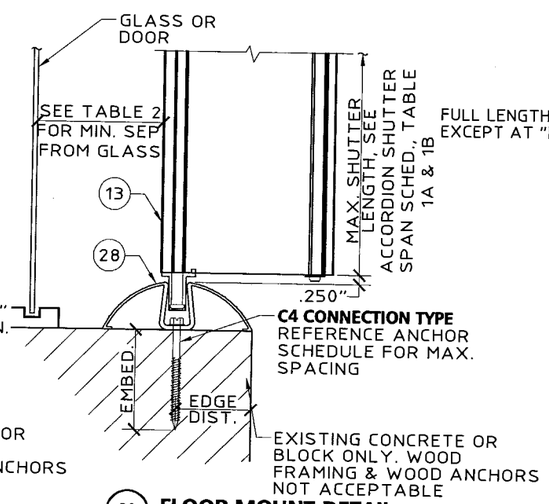

(N) FLOOR MOUNT DETAIL
SCALE : 3"= 1'- 0"

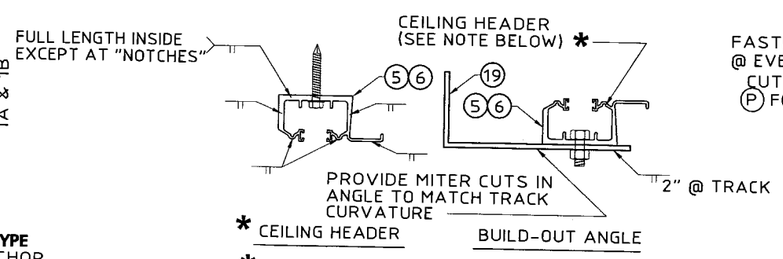

* NOTE: WHEN CEILING HEADER IS USED IN A BOTTOM MOUNTING CONDITION, WELDING LOCATIONS ARE THE SAME.
(USE ER4093 FILLER ALLOY FOR ALL WELDING.)

(P) WELDING DETAILS
SCALE : 3"= 1'- 0"

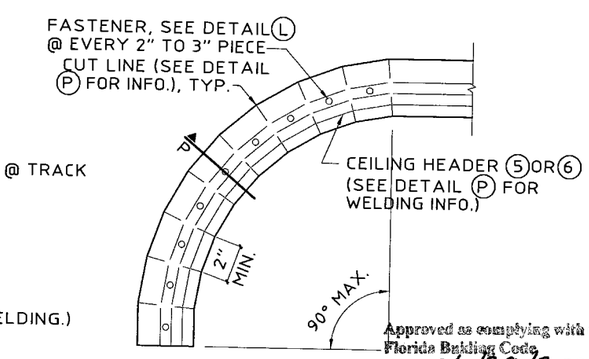

CURVED TRACK PLAN VIEW
N.T.S.

Approved as complying with the Florida Building Code
Date 06/29/2006
NOA# 06-0511.11
Miami Dade Product Control Division
By

Thornton-Tomasetti Group
330 N. Andrews Ave., Suite 450 • Ft. Lauderdale, FL 33301
Tel. (954) 522-3690 • Fax (954) 522-3691 • COA # 7519
Website: www.TheTTGroup.com

Copyright © 2006 Thornton-Tomasetti Group, Inc.
6.8 & HR SYSTEMS LICENSED BY SOUTHERN SHUTTER ASSOCIATION

6.8 & HR ALUM. ACCORDION SHUTTERS

5114 COMMERCIAL WAY
SPRING HILL, FL 34606
PHONE: (352) 596-8583
FAX: (352) 596-8535
FLORIDA HURRICANE PRODUCTS, Inc.

J.W. Knezevich
Professional Engineer
FL License No.: PE 0041961

APR 24 2006

revisions

no	date	by	description
0	06/30/05	NW	PREVIOUSLY DRAWING NO. 03-258
1	12/16/05	VJK	NEW COMPONENTS

SSA I.D. # 0604240537 6D

date 06/30/2005
scale AS NOTED
drawn by MCR
design by JWK
checked by JWK
drawing no. 06-385
sheet 7 of 13

Print Information: P:\FL1\KA\CADD\Associations\SSA\FHP\06-385\R1-sub\06-385-07.dwg MCantu 04/24/2006 01:15:20pm 04/24/06 13:12

6.8 ACCORDION SHUTTER

NOT APPLICABLE TO HR ACCORDION SHUTTER

ANCHOR SCHEDULE

FASTENER MAXIMUM SPACING (INCHES) REQUIRED FOR VARIOUS DESIGN LOADS AND SPANS

EXIST. STRUC.	ANCHOR TYPE	LOAD (W) P.S.F. MAX. (SEE NOTE 1)	MIN. 2" EDGE DISTANCE															MIN. 3" EDGE DISTANCE													
			SPANS UP TO 6'-0" (SEE NOTE 1)					SPANS UP TO 8'-8" (SEE NOTE 1)					SPANS UP TO 12'-9" (SEE NOTE 1)					SPANS UP TO 6'-0" (SEE NOTE 1)					SPANS UP TO 8'-8" (SEE NOTE 1)					SPANS UP TO 12'-9" (SEE NOTE 1)				
			CONNECTION TYPE (SEE NOTE 3)					CONNECTION TYPE (SEE NOTE 3)					CONNECTION TYPE (SEE NOTE 3)					CONNECTION TYPE (SEE NOTE 3)					CONNECTION TYPE (SEE NOTE 3)					CONNECTION TYPE (SEE NOTE 3)				
			C1	C2	C3	C4	C5	C1	C2	C3	C4	C5	C1	C2	C3	C4	C5	C1	C2	C3	C4	C5	C1	C2	C3	C4	C5	C1	C2	C3	C4	C5
CONCRETE	1/4"Ø ELCO TEXTRON TAPCON WITH 1-3/4" MIN. EMBED. (MIN. 3,320 P.S.I. CONCRETE)	48.0	12	12	12	12	10	12	12	9	10	7	12	12	6	7	4	12	12	12	12	12	12	12	11	12	9	12	12	8	8	6
		62.0	12	12	10	11	8	12	12	7	8	5	11	7	5	5	3	12	12	12	12	10	12	12	9	10	7	12	9	6	6	4
		72.0	12	12	9	9	7	12	12	6	6	4	10	4	4	4	3	12	12	11	12	8	12	12	7	8	6	12	6	5	5	4
		110.0	12	12	6	6	4	9	4	4	4	3	8	3	3	3		12	12	7	8	5	12	5	5	5	4	10	4	4	4	3
		200.0	8	3	3	3		8	3	3	3		8	3	3	3		10	4	4	4	3	10	4	4	4	3	10	4	4	4	3
	3/8"Ø POWERS DROP -IN & 3/8-16 STAINLESS STEEL BOLT WITH 1-9/16" MIN. EMBEDMENT (MIN. 3,000 P.S.I. CONCRETE)	48.0																12	12	12	12	12	12	12	12	12	11	12	12	10	11	7
		62.0																12	12	12	12	12	12	12	11	12	9	12	11	7	8	6
		72.0																12	12	12	12	11	12	12	10	10	7	12	8	6	7	5
		110.0																12	12	9	10	7	12	7	6	7	5	12	5	5	6	4
		200.0																12	5	5	6	4	12	5	5	6	4	12	5	5	6	4
	* 1/4"Ø ALL-POINTS SOLID- SET ANCHOR WITH 7/8" EMBEDMENT & 1/4-20 STAINLESS STEEL MACHINE SCREW (MIN. 3,000 P.S.I. CONCRETE)	48.0	12	12	12	12	11	12	12	10	11	8	12	12	7	7	5	12	12	12	12	12	12	12	12	12	10	12	12	9	10	7
		62.0	12	12	11	12	9	12	12	8	8	6	12	8	5	6	4	12	12	12	12	11	12	12	10	11	8	12	10	7	7	5
		72.0	12	12	10	11	7	12	12	7	7	5	11	5	4	5	3	12	12	12	12	10	12	12	9	9	7	12	6	6	6	4
		110.0	12	12	6	7	5	10	5	4	5	3	9	3	3	4	3	12	12	8	9	6	12	6	6	6	4	11	4	5	5	3
		200.0	9	3	3	4	3	9	3	3	4	3	9	3	3	4	3	11	4	5	5	3	11	4	5	5	3	11	4	5	5	3
	1/4"Ø ELCO CRETE FLEX WITH 1-3/4" MIN. EMBEDMENT (MIN. 3,350 P.S.I. CONCRETE)	48.0	12	12	12	12	12	12	12	12	12	10	12	12	9	9	7	12	12	12	12	12	12	12	12	12	12	12	12	10	11	8
		62.0	12	12	12	12	11	12	12	10	11	8	12	10	7	7	5	12	12	12	12	12	12	12	12	12	9	12	11	8	8	6
		72.0	12	12	12	12	10	12	12	8	9	6	12	7	6	6	4	12	12	12	12	11	12	12	10	11	8	12	7	7	7	5
		110.0	12	12	8	9	6	12	6	5	6	4	11	4	5	5	3	12	12	9	10	7	12	7	6	7	5	12	5	5	6	4
		200.0	11	4	5	5	3	11	4	5	5	3	11	4	5	5	3	12	5	5	6	4	12	5	5	6	4	12	5	5	6	4
	5/16"Ø ITW XL TAPCON WITH 1-1/4" MIN. EMBEDMENT (MIN. 2,900 P.S.I. CONCRETE)	48.0	12	12	12	12	12	12	12	12	12	11	12	12	10	10	8	12	12	12	12	12	12	12	12	12	12	12	12	12	12	10
		62.0	12	12	12	12	12	12	12	11	12	9	12	12	7	8	6	12	12	12	12	12	12	12	12	12	12	12	12	10	11	8
		72.0	12	12	12	12	11	12	12	9	10	7	12	9	6	7	5	12	12	12	12	12	12	12	12	12	10	12	10	9	9	7
		110.0	12	12	9	10	7	12	8	6	6	5	12	6	5	5	4	12	12	12	12	10	12	10	8	9	6	12	7	7	8	5
		200.0	12	6	5	5	4	12	6	5	5	4	12	6	5	5	4	12	7	7	8	5	12	7	7	8	5	12	7	7	8	5
HOLLOW CONCRETE BLOCK	1/4"Ø ELCO TEXTRON TAPCON WITH 1-1/4" MIN. EMBED.	48.0	12	12	7	8	5	10	10	5	5	3	6	6	3	4		12	12	9	10	7	12	12	6	7	4	8	8	4	5	3
		62.0	11	11	6	6	4	7	7	4	4	3	5	3		3		12	12	7	8	5	9	9	5	5	3	6	4	3	3	
		72.0	9	9	5	5	3	6	6	3	3		4					12	12	6	7	4	8	8	4	4	3	5		3	3	
		110.0	6	6	3	3		4					3					7	7	4	4	3	5			3		4				
		200.0	3					3					3					4					4					4				
	* 1/4"Ø ALL-POINTS SOLID- SET ANCHOR WITH 7/8" EMBEDMENT & 1/4-20 STAINLESS STEEL MACHINE SCREW	48.0	12	12	10	11	8	12	12	7	8	6	12	12	5	5	4	12	12	12	12	10	12	12	9	10	7	12	12	6	7	5
		62.0	12	12	8	8	6	12	12	5	6	4	10	6	3	4	3	12	12	11	11	8	12	12	7	8	5	11	7	5	5	3
		72.0	12	12	7	7	5	12	12	5	5	4	9	4	3	3		12	12	9	10	7	12	12	6	7	5	10	4	4	4	3
		110.0	12	12	4	5	3	9	4	3	3		7	3				12	12	6	6	4	9	4	4	4	3	8	3	3	3	
		200.0	7	3				7	3				7	3				8	3	3	3		8	3	3	3		8	3	3	3	

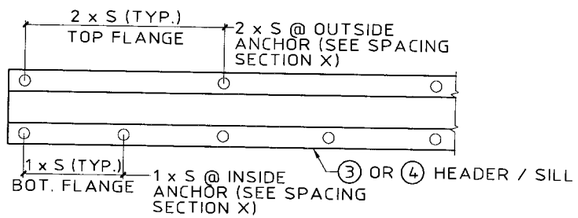

NOTE: "S" INDICATES ANCHOR SCHEDULE SPACING.

SPACING DIAGRAM FOR C1 CONNECTION TYPE:

- C1 CONNECTION TYPE USING PIECE ③ OR ④
- APPLICABLE TO 6.8 SYSTEM ONLY

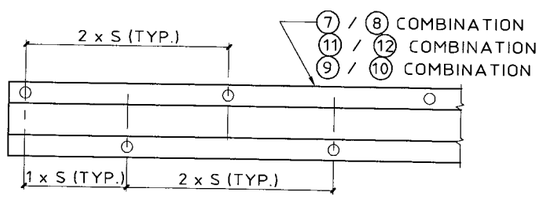

NOTE: "S" INDICATES ANCHOR SCHEDULE SPACING.

SPACING DIAGRAM FOR C3 & C4 CONNECTION TYPE:

- C3 CONNECTION TYPE USING PIECE ⑩ WITH OUTSIDE ANCHORS ONLY
- C4 CONNECTION TYPE USING PIECE ⑧ OR ⑫ WITH OUTSIDE ANCHORS ONLY
- APPLICABLE TO 6.8 SYSTEM ONLY

ANCHOR SCHEDULE

FASTENER MAXIMUM SPACING (INCHES) REQUIRED FOR VARIOUS DESIGN LOADS AND SPANS

EXIST. STRUC.	ANCHOR TYPE	LOAD (W) P.S.F. MAX. (SEE NOTE 1)	MIN. 3/4" EDGE DISTANCE														
			SPANS UP TO 6'-0" (SEE NOTE 1)					SPANS UP TO 8'-8" (SEE NOTE 1)					SPANS UP TO 12'-9" (SEE NOTE 1)				
			CONNECTION TYPE (SEE NOTE 3)					CONNECTION TYPE (SEE NOTE 3)					CONNECTION TYPE (SEE NOTE 3)				
			C1	C2	C3	C4	C5	C1	C2	C3	C4	C5	C1	C2	C3	C4	C5
WOOD	2" MIN. 1/4"Ø x MIN. 3" LONG LAG SCREW WITH MIN. 2" EMBED. SHEAR PARALLEL OR PERP. TO WOOD GRAIN	48.0	12	12	10	11	9	12	12	7	7	6	12	12	5	5	4
		62.0	12	12	8	8	7	12	12	5	5	5	12	12	3	4	3
		72.0	12	12	7	7	6	12	12	4	5	4	12	9	3	3	
		110.0	12	12	4	4	4	12	8	3	3		12	6			
		200.0	12	6				12	6				12	6			
	* 7/16"Ø WOOD BUSHING WITH 5/8" MIN. EMBED. & 1/4-20 STAINLESS STEEL MACHINE SCREW	48.0	12	12				11	11				7	7			
		62.0	12	12				9	9				6	3			
		72.0	11	11				7	7				5				
		110.0	7	7				5					4				
		200.0	4					4					4				

ANCHOR SCHEDULE

FASTENER MAXIMUM SPACING (INCHES) REQUIRED FOR VARIOUS DESIGN LOADS AND SPANS

EXIST. STRUC.	ANCHOR TYPE	LOAD (W) P.S.F. MAX. (SEE NOTE 1)	MIN. 2-1/2" EDGE DISTANCE														
			SPANS UP TO 6'-0" (SEE NOTE 1)					SPANS UP TO 8'-8" (SEE NOTE 1)					SPANS UP TO 12'-9" (SEE NOTE 1)				
			CONNECTION TYPE (SEE NOTE 3)					CONNECTION TYPE (SEE NOTE 3)					CONNECTION TYPE (SEE NOTE 3)				
			C1	C2	C3	C4	C5	C1	C2	C3	C4	C5	C1	C2	C3	C4	C5
CONCRETE	1/4"Ø ITW TAPCON WITH 1-3/4" MIN. EMBEDMENT (MIN. 3,192 P.S.I. CONCRETE)	48.0	12	12	12	12	12	12	12	11	12	9	12	12	7	8	6
		62.0	12	12	12	12	10	12	12	9	9	7	12	10	6	6	4
		72.0	12	12	11	12	9	12	12	7	8	6	12	7	5	5	4
		110.0	12	12	7	7	5	12	6	5	5	4	12	4	4	4	3
		200.0	12	4	4	4	3	12	4	4	4	3	12	4	4	4	3
HOLLOW CONCRETE BLOCK	1/4"Ø ITW TAPCON WITH 1-1/4" MIN. EMBEDMENT	48.0	12	12	7	8	5	11	11	5	6	4	7	7	3	4	
		62.0	12	12	6	6	4	8	8	4	4	3	5	3		3	
		72.0	10	10	5	5	3	7	7	3	4		5				
		110.0	7	7	3	3		4					4				
		200.0	4					4					4				

ANCHOR SCHEDULE

FASTENER MAXIMUM SPACING (INCHES) REQUIRED FOR VARIOUS DESIGN LOADS AND SPANS

EXIST. STRUC.	ANCHOR TYPE	LOAD (W) P.S.F. MAX. (SEE NOTE 1)	MIN. 4" EDGE DISTANCE														
			SPANS UP TO 6'-0" (SEE NOTE 1)					SPANS UP TO 8'-8" (SEE NOTE 1)					SPANS UP TO 12'-9" (SEE NOTE 1)				
			CONNECTION TYPE (SEE NOTE 3)					CONNECTION TYPE (SEE NOTE 3)					CONNECTION TYPE (SEE NOTE 3)				
			C1	C2	C3	C4	C5	C1	C2	C3	C4	C5	C1	C2	C3	C4	C5
HOLLOW CONCRETE BLOCK	5/16"Ø ITW XL TAPCON WITH 1-1/4" MIN. EMBEDMENT	48.0	12	12	12	12	8	12	12	8	9	6	10	10	5	6	4
		62.0	12	12	9	10	6	11	11	6	7	4	7	4	4	4	3
		72.0	12	12	8	9	5	10	10	5	6	4	6	3	3	4	
		110.0	9	9	5	5	3	6	3	3	4		5		3	3	
		200.0	5		3	3		5		3	3		5		3	3	

ANCHOR NOTES:

1. SPANS AND LOADS SHOWN HERE ARE FOR DETERMINING ANCHOR SPACING ONLY. ALLOWABLE STORM SHUTTER SPANS FOR SPECIFIC LOADS MUST BE LIMITED TO THOSE SHOWN IN TABLE 1A & 1B.
2. REFERENCE SHEET 13 FOR NOTES 2 THRU 10.

Approved as complying with the Florida Building Code
Date 06/29/2006
NOA# 06-0511.11
Miami Dade Product Control Division
By

Thornton•Tomasetti Group
330 N. Andrews Ave., Suite 450 • Ft. Lauderdale, FL 33301
Tel. (954) 522-3690 • Fax (954) 522-3691 • COA # 7519
Website: www.TheTTGroup.com

Copyright © 2006 Thornton-Tomasetti Group, Inc.

6.8 & HR SYSTEMS LICENSED BY SOUTHERN SHUTTER ASSOCIATION

6.8 & HR ALUM. ACCORDION SHUTTERS

5114 COMMERCIAL WAY
SPRING HILL, FL 34606
PHONE: (352) 596-8583
FAX: (352) 596-8535
FLORIDA HURRICANE PRODUCTS, Inc.

J.W. Knezevich
Professional Engineer
FL License No.: PE 0041961

APR 24 2006

revisions

no	date	by	description
0	06/30/05	NW	PREVIOUSLY DRAWING NO. 03-258
1	12/16/05	VJK	NEW COMPONENTS

SSA I.D. # 0604240537 6D

date 06/30/2005
scale AS NOTED
drawn by MCR
design by JWK
checked by JWK
drawing no. 06-385
sheet 8 of 13

Print Information: P:\FL1\KA\CADD\Associations\SSA\FHP\06-385\R1-sub\06-385-08.dwg MCantu 04/24/2006 01:15:26pm 04/24/06 13:12

HR ACCORDION SHUTTER

NOT APPLICABLE TO 6.8 ACCORDION SHUTTER

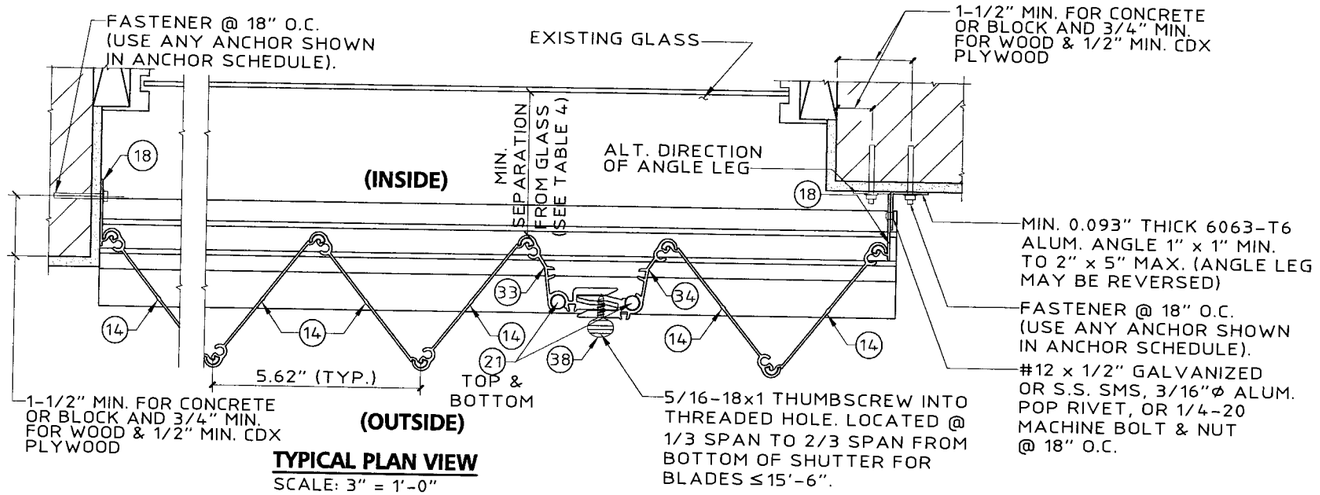

TYPICAL PLAN VIEW
SCALE: 3" = 1'-0"

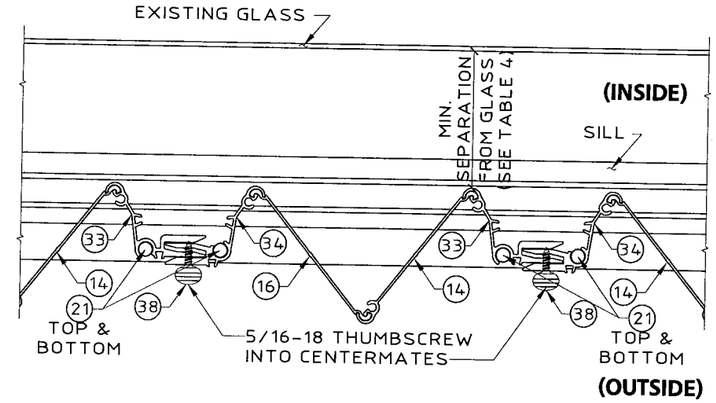

MULTIPLE SHUTTER ASSEMBLY
SCALE: 3" = 1'-0"

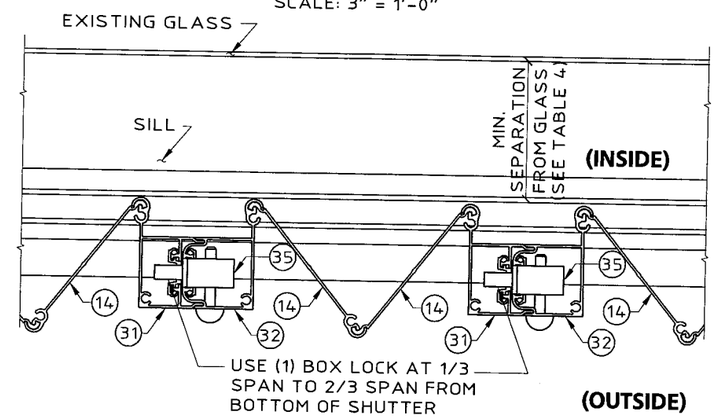

MULTIPLE SHUTTER ASSEMBLY
SCALE: 3" = 1'-0"

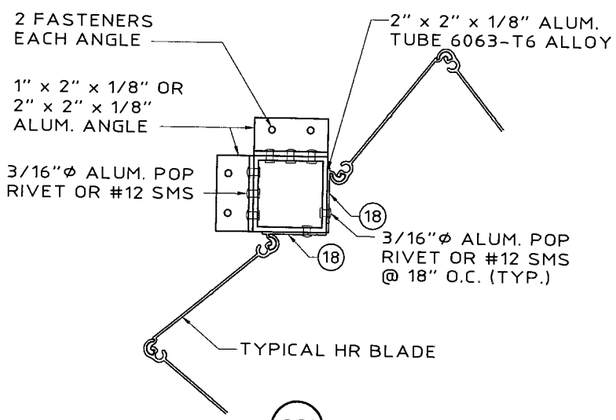

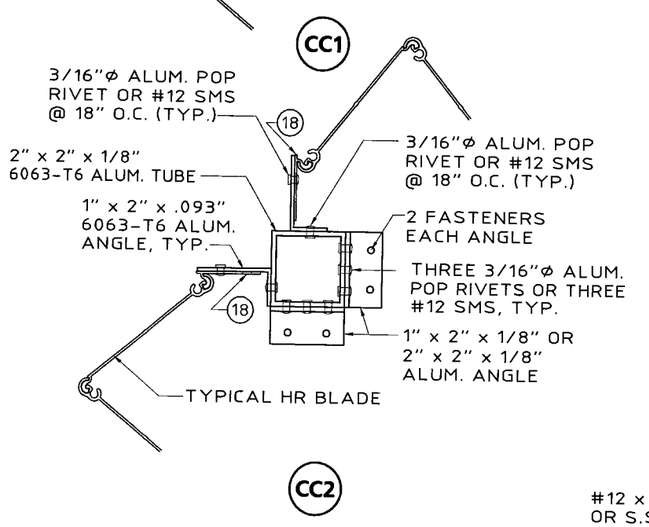

TYPICAL CORNER CLOSURE DETAILS
SCALE: 3" = 1'-0"

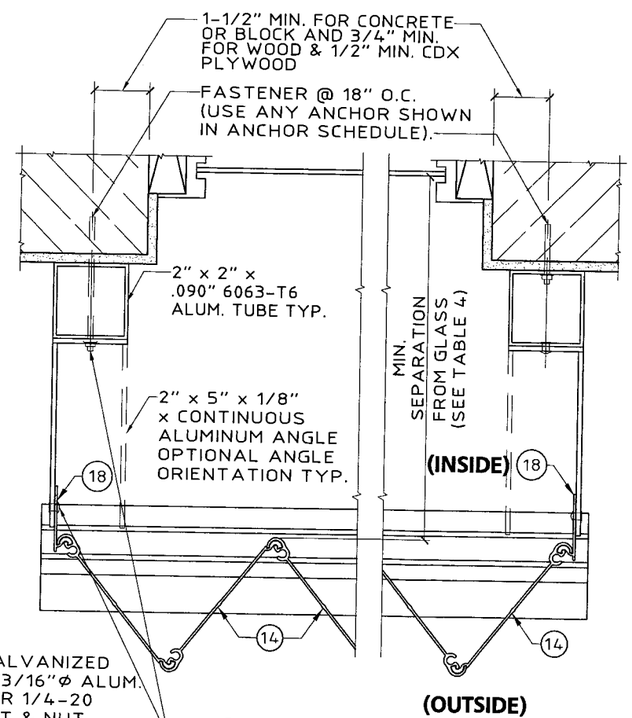

SIDE CLOSURE OPTIONS
SCALE: 3" = 1'-0"

Approved as complying with the Florida Building Code
Date 06/29/2006
NOA# 06-0511.11
Miami Dade Product Control Division
By Helmy A. Abdelsalam

Thornton-Tomasetti Group
330 N. Andrews Ave., Suite 450 • Ft. Lauderdale, FL 33301
Tel. (954) 522-3690 • Fax (954) 522-3691 • COA # 7519
Website: www.TheTTGroup.com

Copyright © 2006 Thornton-Tomasetti Group, Inc.
6.8 & HR SYSTEMS LICENSED BY SOUTHERN SHUTTER ASSOCIATION

6.8 & HR ALUM. ACCORDION SHUTTERS

5114 COMMERCIAL WAY
SPRING HILL, FL 34606
PHONE: (352) 596-8583
FAX: (352) 596-8535
FLORIDA HURRICANE PRODUCTS, Inc.

J.W. Knezevich
Professional Engineer
FL License No.: PE 0041961

APR 24 2006

revisions

no	date	by	description
0	06/30/05	NW	PREVIOUSLY DRAWING NO. 03-258
1	12/16/05	VJK	NEW COMPONENTS

SSA I.D. # 06042405376D

date 06/30/2005	
scale AS NOTED	drawn by MCR
design by JWK	checked by JWK
drawing no. 06-385	
sheet 9 of 13	

Print Information: P:\FL1\KA\CADD\Associations\SSA\FHPI\06-385\R1-sub\06-385-09.dwg MCantu 04/24/2006 01:15:31pm 04/24/06 13:12

HR ACCORDION SHUTTER

NOT APPLICABLE TO 6.8 ACCORDION SHUTTER

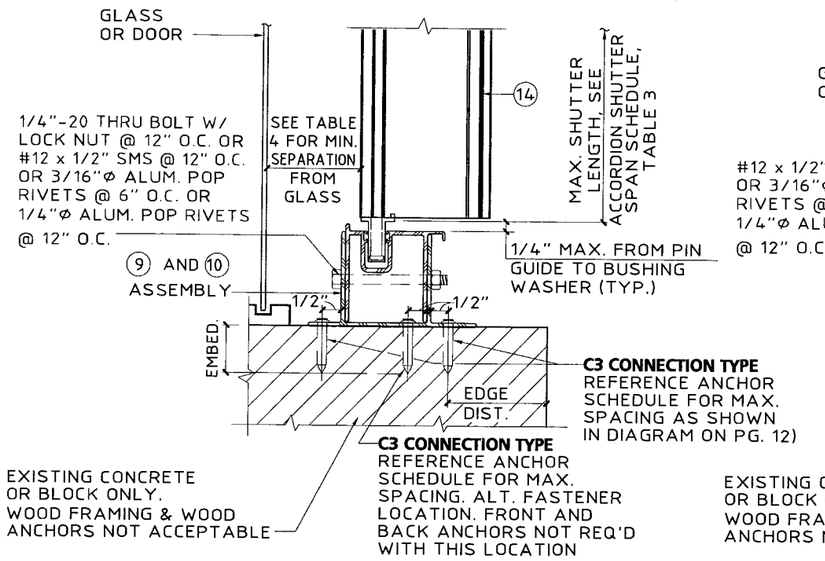

Q INSIDE MOUNT SECTION
SCALE : 3"= 1'- 0"

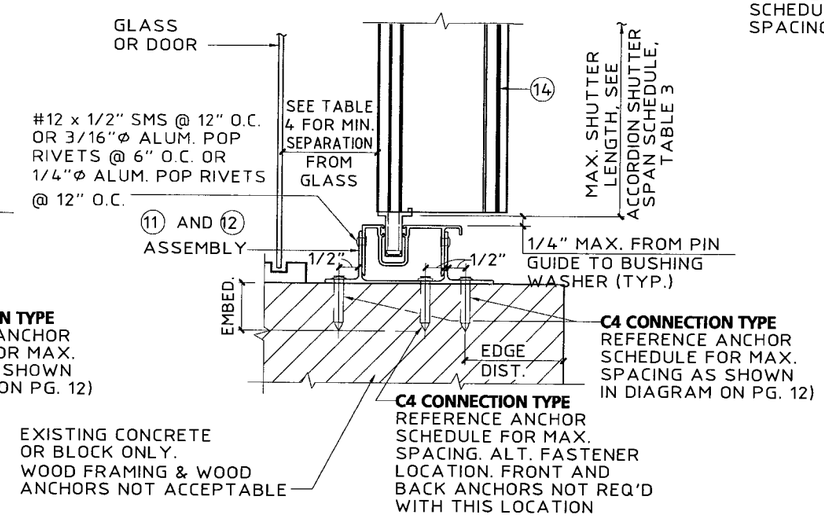

R INSIDE MOUNT SECTION
SCALE : 3"= 1'- 0"

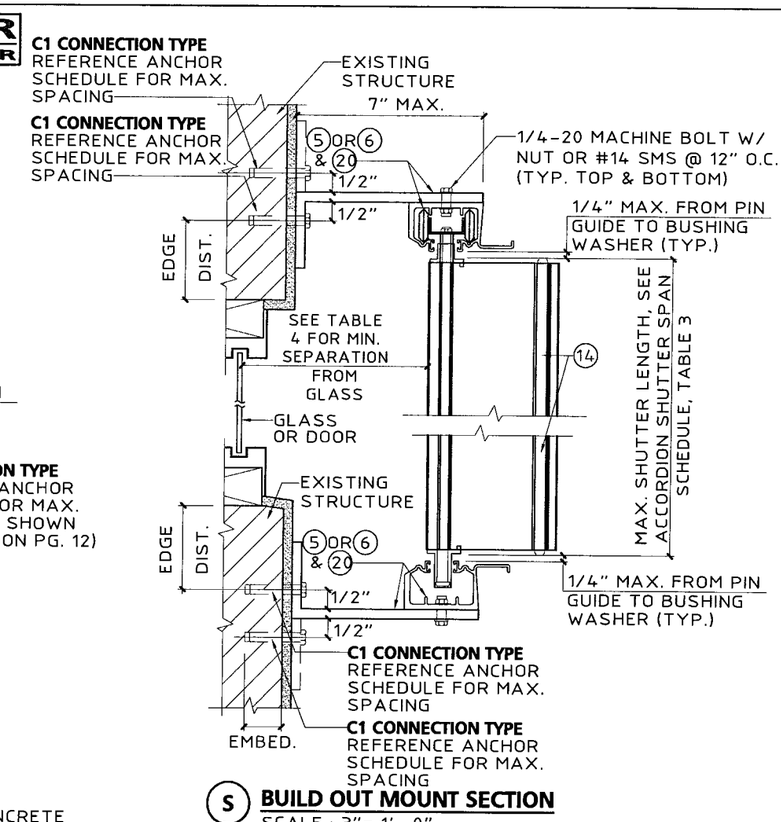

S BUILD OUT MOUNT SECTION
SCALE : 3"= 1'- 0"

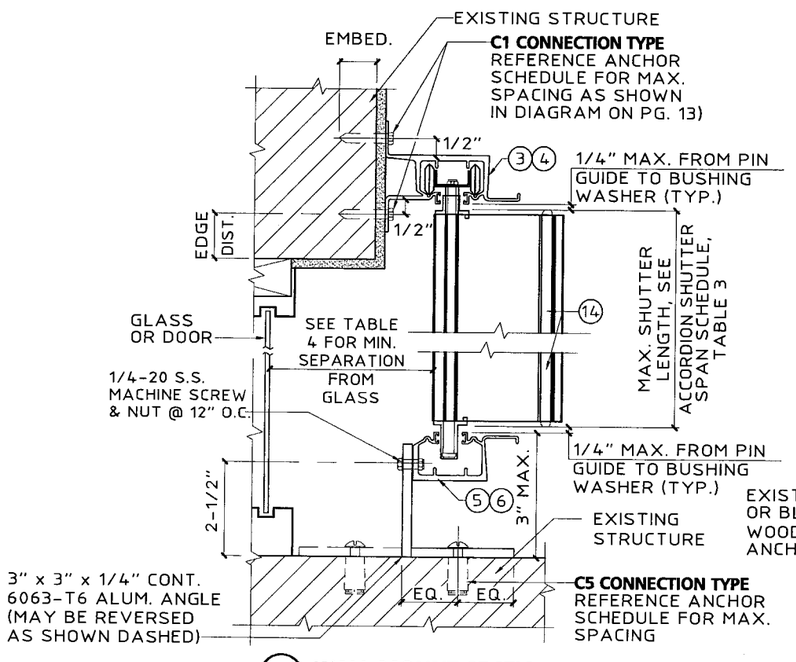

T WALL MOUNT SECTION
SCALE : 3"= 1'- 0"

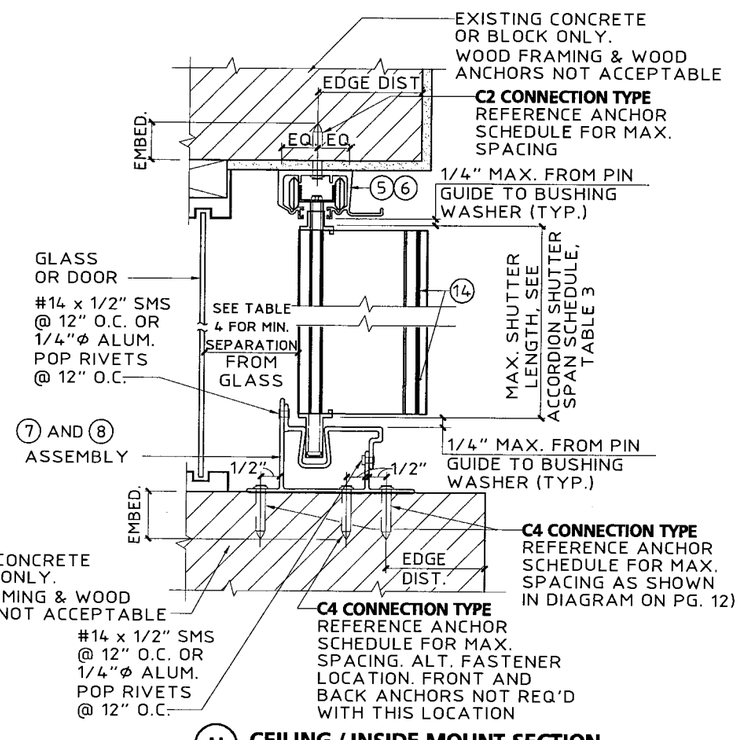

U CEILING / INSIDE MOUNT SECTION
SCALE : 3"= 1'- 0"

Approved as complying with the Florida Building Code
Date 06/29/2006
NOA# 06-0511.11
Miami Dade Product Control Division
By Helena A. Molina

Thornton-Tomasetti Group
330 N. Andrews Ave., Suite 450 • Ft. Lauderdale, FL 33301
Tel. (954) 522-3690 • Fax (954) 522-3691 • COA # 7519
Website: www.TheTTGroup.com

Copyright © 2006 Thornton-Tomasetti Group, Inc.
6.8 & HR SYSTEMS LICENSED BY SOUTHERN SHUTTER ASSOCIATION

6.8 & HR ALUM. ACCORDION SHUTTERS

5114 COMMERCIAL WAY
SPRING HILL, FL 34606
PHONE: (352) 596-8583
FAX: (352) 596-8535

FLORIDA HURRICANE PRODUCTS, Inc.

J.W. Knezevich
Professional Engineer
FL License No.: PE 0041951

APR 24 2006

revisions

no	date	by	description
0	06/30/05	NW	PREVIOUSLY DRAWING NO. 05-258
1	12/16/05	VJK	NEW COMPONENTS

SSA I.D. # 0604240537 6D

date 06/30/2005
scale AS NOTED
drawn by MCR
design by JWK
checked by JWK
drawing no. 06-385
sheet 10 of 13

Print Information: P:\FL1\KA\CADD\Associations\SSA\FHPI\06-385\R1-sub\06-385-10.dwg MCantu 04/24/2006 01:15:37pm 04/24/06 13:12

HR ACCORDION SHUTTER

NOT APPLICABLE TO 6.8 ACCORDION SHUTTER

TABLE 3 — ACCORDION SHUTTER SPAN SCHEDULE FOR ALL MOUNTING CONDITIONS

DESIGN WIND LOAD W (P.S.F.)	POSITIVE WIND LOAD	NEGATIVE WIND LOAD
	L max. (FT-IN)	L max. (FT-IN)
32.5	15-2	15-6
40.0	14-4	15-6
50.0	13-6	15-6
60.0	12-10	15-6
70.0	12-4	15-6
80.0	11-10	15-2
90.0	11-5	14-3
100.0	11-1	13-7
110.0	10-9	12-8
120.0	10-5	11-7
150.0	9-8	10-10
160.0	9-6	10-2
170.0	9-3	9-6
179.1	9-1	9-1
186.4	9-0	9-0
190.0	8-9	8-9
200.0	8-4	8-4
210.0	7-11	7-11
220.0	7-7	7-7
230.0	7-3	7-3

TABLE 3 NOTES:

1. DETERMINE BOTH THE POSITIVE AND THE NEGATIVE WIND LOADS. CHECK THEIR RESPECTIVE SPANS AND USE THE LESSER VALUE OF THE TWO.
2. FOR DESIGN LOADS BETWEEN TABULATED VALUES USE NEXT HIGHER LOAD OR LINEAR INTERPOLATION MAY BE USED TO DETERMINE ALLOWABLE SPANS.

TABLE 4 NOTE:

1. ENTER TABLE 4 WITH POSITIVE DESIGN LOAD TO DETERMINE MIN. STORM SHUTTER SEPARATION FROM GLASS.

TABLE 4 — MINIMUM SHUTTER SEPARATION FROM GLASS

POSITIVE DESIGN LOAD (W) (P.S.F.)	ACTUAL SHUTTER SPAN (L) (FT. - IN)	MIN. SEPARATION FROM GLASS FOR INSTALLATIONS LESS THAN OR EQUAL TO 30' ABOVE GRADE (IN.)	MIN. SEPARATION FROM GLASS FOR INSTALLATIONS GREATER THAN 30' ABOVE GRADE (IN.)
40.0	9-0	2-1/2	1-3/4
	11-0	2-1/2	2-1/8
	14-4	3-1/4	3-1/4
50.0	9-0	2-1/2	1-7/8
	11-0	2-1/2	2-1/4
	13-6	3-1/4	3-1/4
60.0	9-0	2-1/2	1-7/8
	11-0	2-1/2	2-3/8
	12-11	3-1/4	3-1/4
70.0	9-0	2-1/2	2
	11-0	2-1/2	2-1/2
	12-4	3-1/4	3-1/4
80.0	9-0	2-1/2	2
	11-0	2-3/4	2-3/4
	11-11	3-1/8	3-1/8
90.0	9-0	2-1/2	2
	11-0	2-7/8	2-7/8
	11-5	3-1/8	3-1/8
100.0	9-0	2-1/2	2-1/8
	10-0	2-1/2	2-1/2
	11-1	3-1/8	3-1/8
110.0	9-0	2-1/2	2-1/4
	10-0	2-5/8	2-5/8
	10-9	3	3
120.0	9-0	2-1/2	2-1/4
	10-0	2-3/4	2-3/4
	10-5	3	3
130.0	9-0	2-1/2	2-3/8
	10-0	2-7/8	2-7/8
	10-2	3	3

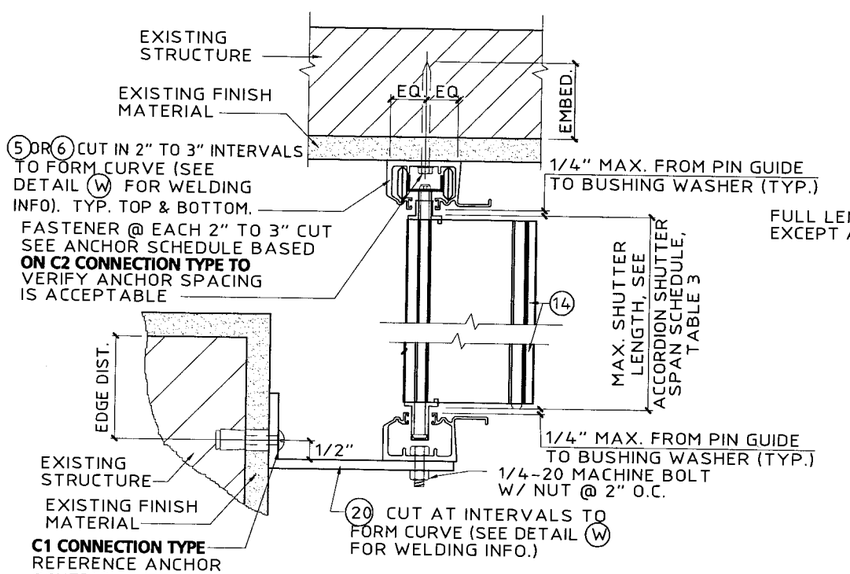

V CURVED TRACK DETAIL
SCALE : 3"= 1'- 0"

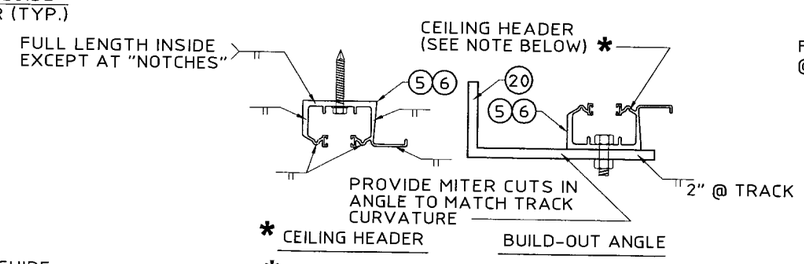

* NOTE: WHEN CEILING HEADER IS USED IN A BOTTOM MOUNTING CONDITION, WELDING LOCATIONS ARE THE SAME.
(USE ER4093 FILLER ALLOY FOR ALL WELDING.)

W WELDING DETAILS
SCALE : 3"= 1'- 0"

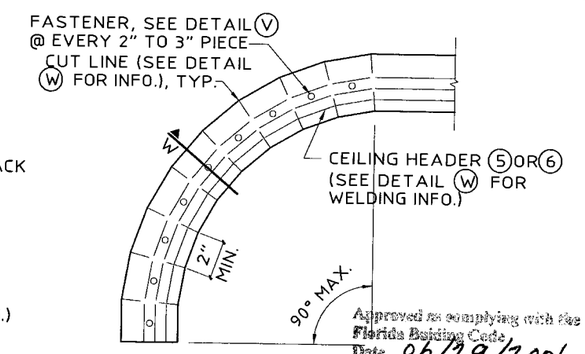

CURVED TRACK PLAN VIEW
N.T.S.

Approved as complying with the Florida Building Code
Date 06/29/2006
NOA# 06-0511.11
Miami Dade Product Control Division
By

Thornton-Tomasetti Group
330 N. Andrews Ave., Suite 450 • Ft. Lauderdale, FL 33301
Tel. (954) 522-3690 • Fax (954) 522-3691 • COA # 7519
Website: www.TheTTGroup.com

Copyright © 2006 Thornton-Tomasetti Group, Inc.
6.8 & HR SYSTEMS LICENSED BY SOUTHERN SHUTTER ASSOCIATION

6.8 & HR ALUM. ACCORDION SHUTTERS

FLORIDA HURRICANE PRODUCTS, Inc.
5114 COMMERCIAL WAY
SPRING HILL, FL 34606
PHONE: (352) 596-8583
FAX: (352) 596-8535

J.W. Knezevich
Professional Engineer
FL License No.: PE 0041961

APR 24 2006

revisions

no	date	by	description
0	06/30/05	NW	PREVIOUSLY DRAWING NO. 03-258
1	12/16/05	VJK	NEW COMPONENTS

SSA I.D. # 0604240537 6D

date 06/30/2005
scale AS NOTED
drawn by MCR
design by JWK
checked by JWK
drawing no. 06-385
sheet 11 of 13

Print Information: P:\FL1\KA\CADD\Associations\SSA\FHPI\06-385\R1-sub\06-385-11.dwg MCantu 04/24/2006 01:15:42pm 04/24/06 13:12

04/24/06 13:12

Print Information: P:\FL1\KA\CADD\Associations\SSA\FHPI\06-385\R1-sub\06-385-12.dwg MCantu 04/24/2006 01:15:47pm

HR ACCORDION SHUTTER

NOT APPLICABLE TO 6.8 ACCORDION SHUTTER

ANCHOR SCHEDULE

FASTENER MAXIMUM SPACING (INCHES) REQUIRED FOR VARIOUS DESIGN LOADS AND SPANS

MIN. 2" EDGE DISTANCE

EXIST. STRUC.	ANCHOR TYPE	LOAD (W) P.S.F. MAX. (SEE NOTE 1)	SPANS UP TO 6'-0" (SEE NOTE 1) CONNECTION TYPE (SEE NOTE 3)					SPANS UP TO 8'-8" (SEE NOTE 1) CONNECTION TYPE (SEE NOTE 3)					SPANS UP TO 10'-2" (SEE NOTE 1) CONNECTION TYPE (SEE NOTE 3)					SPANS UP TO 15'-6" (SEE NOTE 1) CONNECTION TYPE (SEE NOTE 3)				
			C1	C2	C3	C4	C5	C1	C2	C3	C4	C5	C1	C2	C3	C4	C5	C1	C2	C3	C4	C5
CONCRETE	1/4"Ø ELCO TEXTRON TAPCON WITH 1-3/4" MIN. EMBED. (MIN. 3,320 P.S.I. CONCRETE)	75.0	12	9	8	10	6	12	6	6	7	4	12	5	5	6	4	7	3	3	4	
		90.0	12	7	7	8	5	11	5	5	6	3	10	4	4	5	3	6	3		3	
		140.0	11	5	4	5	3	7	3	3	3		6	3		3		5				
		180.0	8	3	3	4		5			3		5					5				
		230.0	6	3		3		5					5					5				
	3/8"Ø POWERS DROP -IN & 3/8-16 STAINLESS STEEL BOLT WITH 1-9/16" MIN. EMBEDMENT (MIN. 3,000 P.S.I. CONCRETE)	75.0																				
		90.0																				
		140.0																				
		180.0																				
		230.0																				
	* 1/4"Ø ALL-POINTS SOLID- SET ANCHOR WITH 7/8" EMBEDMENT & 1/4-20 STAINLESS STEEL MACHINE SCREW (MIN. 3,000 P.S.I. CONCRETE)	75.0	12	10	9	11	7	12	7	6	8	5	12	6	5	6	4	8	4	3	4	
		90.0	12	8	8	9	6	12	6	5	6	4	11	5	4	5	3	7	3	3	3	
		140.0	12	5	5	6	4	8	3	3	4		7	3	3	3		6			3	
		180.0	9	4	4	4	3	6	3		3		6			3		6			3	
		230.0	7	3	3	3		6			3		6			3		6			3	
	1/4"Ø ELCO CRETE FLEX WITH 1-3/4" MIN. EMBEDMENT (MIN. 3,350 P.S.I. CONCRETE)	75.0	12	12	12	12	9	12	9	8	10	6	12	7	7	8	5	11	5	4	5	3
		90.0	12	11	10	12	8	12	7	7	8	5	12	6	6	7	4	9	4	4	4	3
		140.0	12	7	6	7	5	10	4	4	5	3	9	4	3	4	3	8	3	3	4	
		180.0	12	5	5	6	4	8	3	3	4		8	3	3	4		8	3	3	4	
		230.0	9	4	4	4	3	8	3	3	4		8	3	3	4		8	3	3	4	
	5/16"Ø ITW XL TAPCON WITH 1-1/4" MIN. EMBEDMENT (MIN. 2,900 P.S.I. CONCRETE)	75.0	12	12	12	12	10	12	10	9	10	7	12	8	8	9	6	12	5	5	6	4
		90.0	12	12	11	12	9	12	8	7	9	6	12	7	6	7	5	12	4	4	5	3
		140.0	12	7	7	8	5	12	5	5	5	4	12	4	4	4	3	10	4	3	4	3
		180.0	12	6	5	6	4	10	4	3	4	3	10	4	3	4	3	10	4	3	4	3
		230.0	12	4	4	5	3	10	4	3	4	3	10	4	3	4	3	10	4	3	4	3
HOLLOW CONCRETE BLOCK	1/4"Ø ELCO TEXTRON TAPCON WITH 1-1/4" MIN. EMBED.	75.0	9	5	5	6	3	6	3	3	4		5	3		3		3				
		90.0	7	4	4	5	3	5	3		3		4			3		3				
		140.0	4			3		3														
		180.0	3																			
		230.0	3																			
	* 1/4"Ø ALL-POINTS SOLID- SET ANCHOR WITH 7/8" EMBEDMENT & 1/4-20 STAINLESS STEEL MACHINE SCREW	75.0	12	7	6	7	5	12	5	4	5	3	11	4	4	4	3	7			3	
		90.0	12	6	5	6	4	11	4	4	4	3	9	3	3	3		6				
		140.0	10	3	3	4		7					6					5				
		180.0	7	3		3		5					5					5				
		230.0	6					5					5					5				

MIN. 3" EDGE DISTANCE

EXIST. STRUC.	ANCHOR TYPE	LOAD (W) P.S.F. MAX. (SEE NOTE 1)	SPANS UP TO 6'-0" (SEE NOTE 1) CONNECTION TYPE (SEE NOTE 3)					SPANS UP TO 8'-8" (SEE NOTE 1) CONNECTION TYPE (SEE NOTE 3)					SPANS UP TO 10'-2" (SEE NOTE 1) CONNECTION TYPE (SEE NOTE 3)					SPANS UP TO 15'-6" (SEE NOTE 1) CONNECTION TYPE (SEE NOTE 3)				
			C1	C2	C3	C4	C5	C1	C2	C3	C4	C5	C1	C2	C3	C4	C5	C1	C2	C3	C4	C5
CONCRETE	1/4"Ø ELCO TEXTRON TAPCON WITH 1-3/4" MIN. EMBED. (MIN. 3,320 P.S.I. CONCRETE)	75.0	12	11	11	12	8	12	8	7	9	5	12	7	6	7	5	9	4	4	5	3
		90.0	12	9	9	10	7	12	6	6	7	4	12	5	5	6	4	8	3	3	4	
		140.0	12	6	5	7	4	9	4	4	4	3	8	3	3	4		7	3	3	3	
		180.0	10	4	4	5	3	7	3	3	3		7	3	3	3		7	3	3	3	
		230.0	8	3	3	4		7	3	3	3		7	3	3	3		7	3	3	3	
	3/8"Ø POWERS DROP -IN & 3/8-16 STAINLESS STEEL BOLT WITH 1-9/16" MIN. EMBEDMENT (MIN. 3,000 P.S.I. CONCRETE)	75.0	12	12	12	12	10	12	10	9	11	7	12	8	8	9	6	12	5	5	6	4
		90.0	12	12	11	12	9	12	8	8	9	6	12	7	6	8	5	10	4	4	5	3
		140.0	12	8	7	8	5	12	5	5	6	4	10	4	4	5	3	9	4	3	4	3
		180.0	12	6	5	6	4	9	4	4	4	3	9	4	3	4	3	9	4	3	4	3
		230.0	11	4	4	5	3	9	4	3	4	3	9	4	3	4	3	9	4	3	4	3
	* 1/4"Ø ALL-POINTS SOLID- SET ANCHOR WITH 7/8" EMBEDMENT & 1/4-20 STAINLESS STEEL MACHINE SCREW (MIN. 3,000 P.S.I. CONCRETE)	75.0	12	12	12	12	9	12	9	8	10	6	12	8	7	8	5	11	5	4	5	3
		90.0	12	11	10	12	8	12	7	7	8	5	12	6	6	7	4	9	4	4	4	3
		140.0	12	7	6	8	5	10	5	4	5	3	9	4	4	4	3	8	3	3	4	
		180.0	12	5	5	6	4	8	3	3	4		8	3	3	4		8	3	3	4	
		230.0	9	4	4	4	3	8	3	3	4		8	3	3	4		8	3	3	4	
	1/4"Ø ELCO CRETE FLEX WITH 1-3/4" MIN. EMBEDMENT (MIN. 3,350 P.S.I. CONCRETE)	75.0	12	12	12	12	11	12	10	10	11	7	12	9	8	10	6	12	6	5	6	4
		90.0	12	12	12	12	9	12	9	8	9	6	12	7	7	8	5	10	5	4	5	3
		140.0	12	8	7	9	6	12	5	5	6	4	10	5	4	5	3	9	4	4	4	3
		180.0	12	6	6	7	4	9	4	4	4	3	9	4	4	4	3	9	4	4	4	3
		230.0	10	5	4	5	3	9	4	4	4	3	9	4	4	4	3	9	4	4	4	3
	5/16"Ø ITW XL TAPCON WITH 1-1/4" MIN. EMBEDMENT (MIN. 2,900 P.S.I. CONCRETE)	75.0	12	12	12	12	12	12	12	12	12	10	12	12	11	12	8	12	7	7	8	5
		90.0	12	12	12	12	12	12	11	10	12	8	12	10	9	10	7	12	6	6	7	4
		140.0	12	10	10	11	7	12	7	7	8	5	12	6	6	7	4	12	5	5	6	4
		180.0	12	8	7	9	6	12	5	5	6	4	12	5	5	6	4	12	5	5	6	4
		230.0	12	6	6	7	4	12	5	5	6	4	12	5	5	6	4	12	5	5	6	4
HOLLOW CONCRETE BLOCK	1/4"Ø ELCO TEXTRON TAPCON WITH 1-1/4" MIN. EMBED.	75.0	11	6	6	7	4	8	4	4	5	3	6	4	3	4		4				
		90.0	9	5	5	6	3	6	3	3	4		5	3	3	3		3				
		140.0	6	3	3	4		4					3					3				
		180.0	4			3		3					3					3				
		230.0	3					3					3					3				
	* 1/4"Ø ALL-POINTS SOLID- SET ANCHOR WITH 7/8" EMBEDMENT & 1/4-20 STAINLESS STEEL MACHINE SCREW	75.0	12	9	9	10	7	12	6	6	7	4	12	5	5	6	4	8	3	3	4	
		90.0	12	8	7	9	5	12	5	5	6	4	10	4	4	5	3	6	3		3	
		140.0	11	5	4	5	3	7	3	3	4		6	3		3		5				
		180.0	8	4	3	4		6			3		5					5				
		230.0	6	3		3		5					5					5				

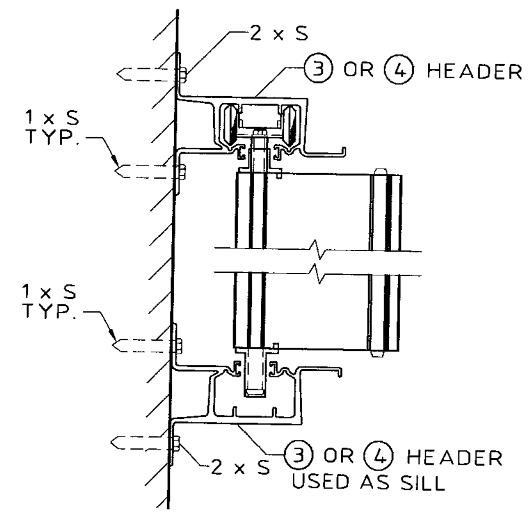

Ⓧ **SPACING SECTION**
SCALE : 3"= 1'- 0"

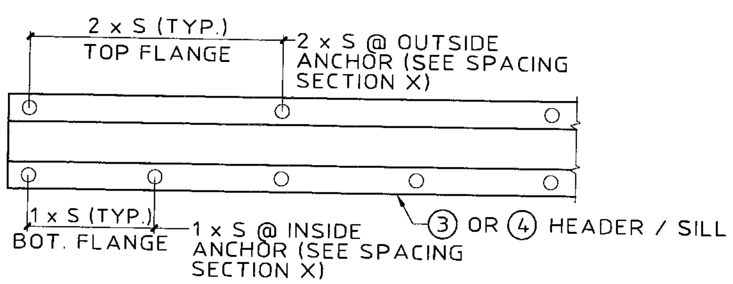

NOTE: "S" INDICATES ANCHOR SCHEDULE SPACING.

SPACING DIAGRAM FOR C1 CONNECTION TYPE:

- C1 CONNECTION TYPE USING PIECE ③ OR ④
- APPLICABLE TO HR SYSTEM ONLY

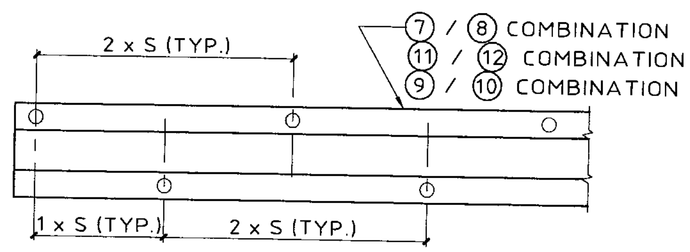

NOTE: "S" INDICATES ANCHOR SCHEDULE SPACING.

SPACING DIAGRAM FOR C3 & C4 CONNECTION TYPE:

- C3 CONNECTION TYPE USING PIECE ⑩ WITH OUTSIDE ANCHORS ONLY
- C4 CONNECTION TYPE USING PIECE ⑧ OR ⑫ WITH OUTSIDE ANCHORS ONLY
- APPLICABLE TO HR SYSTEM ONLY

ANCHOR NOTES:

1. **SPANS AND LOADS SHOWN HERE ARE FOR DETERMINING ANCHOR SPACING ONLY. ALLOWABLE STORM SHUTTER SPANS FOR SPECIFIC LOADS MUST BE LIMITED TO THOSE SHOWN IN TABLE 3.**
2. REFERENCE SHEET 13 FOR NOTES 2 THRU 10.

Approved as complying with the Florida Building Code
Date 06/29/2006
NOA# 06-0511.11
Miami Dade Product Control Division
By [signature]

Thornton-Tomasetti Group
330 N. Andrews Ave., Suite 450 • Ft. Lauderdale, FL 33301
Tel. (954) 522-3690 • Fax (954) 522-3691 • COA # 7519
Website: www.TheTTGroup.com

Copyright © 2006 Thornton-Tomasetti Group, Inc.
6.8 & HR SYSTEMS LICENSED BY SOUTHERN SHUTTER ASSOCIATION

6.8 & HR ALUM. ACCORDION SHUTTERS

5114 COMMERCIAL WAY
SPRING HILL, FL 34606
PHONE: (352) 596-8583
FAX: (352) 596-8535
FLORIDA HURRICANE PRODUCTS, Inc.

J.W. Knezevich
Professional Engineer
FL License No.: PE 0041961

APR 24 2006

revisions

no	date	by	description
0	06/30/05	NW	PREVIOUSLY DRAWING NO. 03-258
1	12/16/05	VJK	NEW COMPONENTS

SSA I.D. # 0604240553 76D

date 06/30/2005	
scale AS NOTED	drawn by MCR
design by JWK	checked by JWK
drawing no. 06-385	

HR ACCORDION SHUTTER

NOT APPLICABLE TO 6.8 ACCORDION SHUTTER

ANCHOR SCHEDULE

FASTENER MAXIMUM SPACING (INCHES) REQUIRED FOR VARIOUS DESIGN LOADS AND SPANS

EXIST. STRUC.	ANCHOR TYPE	LOAD (W) P.S.F. MAX. (SEE NOTE 1)	MIN. 3/4" EDGE DISTANCE																			
			SPANS UP TO 6'-0" (SEE NOTE 1)					SPANS UP TO 8'-8" (SEE NOTE 1)					SPANS UP TO 10'-2" (SEE NOTE 1)					SPANS UP TO 15'-6" (SEE NOTE 1)				
			CONNECTION TYPE (SEE NOTE 3)					CONNECTION TYPE (SEE NOTE 3)					CONNECTION TYPE (SEE NOTE 3)					CONNECTION TYPE (SEE NOTE 3)				
			C1	C2	C3	C4	C5	C1	C2	C3	C4	C5	C1	C2	C3	C4	C5	C1	C2	C3	C4	C5
WOOD	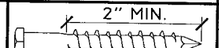 2" MIN. 1/4"Ø x MIN. 3" LONG LAG SCREW WITH MIN. 2" EMBED. SHEAR PARALLEL OR PERP. TO WOOD GRAIN	75.0	12	7	6	7	6	12	4	4	5	4	12	4	4	4	3	12				
		90.0	12	5	5	6	5	12	4	3	4	3	12	3	3	3	3	12				
		140.0	12	3	3	3	3	12					12					10				
		180.0	12			3		11					10					10				
		230.0	12					10					10					10				
	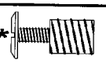 * 7/16"Ø WOOD BUSHING WITH 5/8" MIN. EMBED. & 1/4-20 STAINLESS STEEL MACHINE SCREW	75.0	10					7					6					4				
		90.0	9					6					5					3				
		140.0	5					4					3									
		180.0	4					3														
		230.0	3																			

ANCHOR SCHEDULE

FASTENER MAXIMUM SPACING (INCHES) REQUIRED FOR VARIOUS DESIGN LOADS AND SPANS

EXIST. STRUC.	ANCHOR TYPE	LOAD (W) P.S.F. MAX. (SEE NOTE 1)	MIN. 2-1/2" EDGE DISTANCE																			
			SPANS UP TO 6'-0" (SEE NOTE 1)					SPANS UP TO 8'-8" (SEE NOTE 1)					SPANS UP TO 10'-2" (SEE NOTE 1)					SPANS UP TO 15'-6" (SEE NOTE 1)				
			CONNECTION TYPE (SEE NOTE 3)					CONNECTION TYPE (SEE NOTE 3)					CONNECTION TYPE (SEE NOTE 3)					CONNECTION TYPE (SEE NOTE 3)				
			C1	C2	C3	C4	C5	C1	C2	C3	C4	C5	C1	C2	C3	C4	C5	C1	C2	C3	C4	C5
CONCRETE	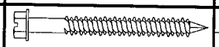 1/4"Ø ITW TAPCON WITH 1-3/4" MIN. EMBEDMENT (MIN. 3,192 P.S.I. CONCRETE)	75.0	12	11	10	12	8	12	8	7	8	6	12	6	6	7	5	11	4	4	4	3
		90.0	12	9	9	10	7	12	6	6	7	5	12	5	5	6	4	9	3	3	4	
		140.0	12	6	5	6	4	11	4	4	4	3	9	3	3	3		8	3	3	3	
		180.0	12	4	4	5	3	8	3	3	3		8	3	3	3		8	3	3	3	
		230.0	10	3	3	4		8	3	3	3		8	3	3	3		8	3	3	3	
HOLLOW CONCRETE BLOCK	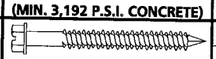 1/4"Ø ITW TAPCON WITH 1-1/4" MIN. EMBEDMENT	75.0	10	5	5	6	3	7	3	3	4		6	3	3	3		4				
		90.0	8	4	4	5	3	5	3		3		5			3		3				
		140.0	5			3		3					3									
		180.0	4																			
		230.0	3																			

ANCHOR SCHEDULE

FASTENER MAXIMUM SPACING (INCHES) REQUIRED FOR VARIOUS DESIGN LOADS AND SPANS

EXIST. STRUC.	ANCHOR TYPE	LOAD (W) P.S.F. MAX. (SEE NOTE 1)	MIN. 4" EDGE DISTANCE																			
			SPANS UP TO 6'-0" (SEE NOTE 1)					SPANS UP TO 8'-8" (SEE NOTE 1)					SPANS UP TO 10'-2" (SEE NOTE 1)					SPANS UP TO 15'-6" (SEE NOTE 1)				
			CONNECTION TYPE (SEE NOTE 3)					CONNECTION TYPE (SEE NOTE 3)					CONNECTION TYPE (SEE NOTE 3)					CONNECTION TYPE (SEE NOTE 3)				
			C1	C2	C3	C4	C5	C1	C2	C3	C4	C5	C1	C2	C3	C4	C5	C1	C2	C3	C4	C5
HOLLOW CONCRETE BLOCK	5/16"Ø ITW XL TAPCON WITH 1-1/4" MIN. EMBEDMENT	75.0	12	8	7	9	5	9	6	5	6	3	8	5	4	5	3	5	3	3	3	
		90.0	11	7	6	8	4	8	5	4	5	3	6	4	3	4		4			3	
		140.0	7	4	4	5	3	5	3		3		4			3		3				
		180.0	5	3	3	4		4					3					3				
		230.0	4			3		3					3					3				

ANCHOR SCHEDULE

FASTENER MAXIMUM SPACING (INCHES) REQUIRED FOR VARIOUS DESIGN LOADS AND SPANS

EXIST. STRUC.	ANCHOR TYPE	LOAD (W) P.S.F. MAX. (SEE NOTE 1)	MIN. 4-1/2" EDGE DISTANCE																			
			SPANS UP TO 6'-0" (SEE NOTE 1)					SPANS UP TO 8'-8" (SEE NOTE 1)					SPANS UP TO 10'-2" (SEE NOTE 1)					SPANS UP TO 15'-6" (SEE NOTE 1)				
			CONNECTION TYPE (SEE NOTE 3)					CONNECTION TYPE (SEE NOTE 3)					CONNECTION TYPE (SEE NOTE 3)					CONNECTION TYPE (SEE NOTE 3)				
			C1	C2	C3	C4	C5	C1	C2	C3	C4	C5	C1	C2	C3	C4	C5	C1	C2	C3	C4	C5
CONCRETE	3/8"Ø POWERS DROP -IN & 3/8-16 STAINLESS STEEL BOLT WITH 1-9/16" MIN. EMBEDMENT (MIN. 3,000 P.S.I. CONCRETE)	75.0	12	12	12	12	12	12	12	12	12	10	12	12	12	12	9	12	8	8	9	6
		90.0	12	12	12	12	12	12	12	12	12	9	12	11	10	12	7	12	7	6	8	5
		140.0	12	12	11	12	8	12	8	7	9	5	12	7	6	8	4	11	6	5	7	4
		180.0	12	9	8	10	6	12	6	6	7	4	11	6	5	7	4	11	6	5	7	4
		230.0	12	7	6	8	5	11	6	5	7	4	11	6	5	7	4	11	6	5	7	4

ANCHOR NOTES:

1. **SPANS AND LOADS SHOWN HERE ARE FOR DETERMINING ANCHOR SPACING ONLY. ALLOWABLE STORM SHUTTER SPANS FOR SPECIFIC LOADS MUST BE LIMITED TO THOSE SHOWN IN TABLE 3.**
2. ENTER ANCHOR SCHEDULE BASED ON THE EXISTING STRUCTURE MATERIAL, ANCHOR TYPE AND EDGE DISTANCE. SELECT DESIGN LOAD GREATER THAN OR EQUAL TO NEGATIVE DESIGN LOAD ON SHUTTER AND SELECT SPAN GREATER THAN OR EQUAL TO SHUTTER SPAN.
3. SEE MOUNTING SECTION DETAILS FOR IDENTIFICATION OF CONNECTION TYPE.
4. EXISTING STRUCTURE MAY BE CONCRETE, ASTM C-90 HOLLOW CONCRETE BLOCK OR WOOD FRAMING. REFERENCE ANCHOR SCHEDULE FOR PROPER ANCHOR TYPE BASED ON TYPE OF EXISTING STRUCTURE AND APPROPRIATE CONNECTION TYPE. SEE CONNECTION DETAILS FOR IDENTIFICATION OF CONNECTION TYPE.
5. ANCHORS SHALL BE INSTALLED IN ACCORDANCE WITH MANUFACTURERS' RECOMMENDATIONS. EMBEDMENT LENGTHS SHALL BE AS NOTED AND DO NOT INCLUDE STUCCO OR OTHER FINISHES.
6. WHERE EXISTING STRUCTURE IS WOOD FRAMING, WOOD FRAMING CONDITIONS VARY. FIELD VERIFY THAT FASTENERS ARE INTO ADEQUATE WOOD FRAMING MEMBERS, NOT PLYWOOD. FASTENING TO PLYWOOD IS ACCEPTABLE ONLY FOR SIDE CLOSURE PIECES.
7. WHERE LAG SCREWS FASTEN TO NARROW FACE OF STUD FRAMING, FASTENER SHALL BE LOCATED IN CENTER OF NOMINAL 2" x 4" (MIN.) WOOD STUD. 3/4" EDGE DISTANCE IS ACCEPTABLE FOR WOOD FRAMING. WOOD STUD SHALL BE "SOUTHERN PINE" G=0.55 OR GREATER DENSITY. LAG SCREWS SHALL HAVE PHILLIPS PAN HEAD OR HEX HEAD.
8. MACHINE SCREWS SHALL HAVE MINIMUM OF 1/2" ENGAGEMENT OF THREADS IN BASE ANCHOR AND MAY HAVE EITHER A PAN HEAD, TRUSS HEAD, OR WAFER HEAD (SIDEWALK BOLT), U.O.N.
9. DESIGNATES ANCHOR CONDITIONS WHICH ARE NOT ACCEPTABLE USES.
10. * DESIGNATES ANCHORS WHICH ARE REMOVABLE BY REMOVING MACHINE SCREW, NUT OR WASHERED WINGNUT.

Approved as complying with the Florida Building Code
Date 06/29/2006
NOA# 06-0511.11
Miami Dade Product Control Division
By

Thornton-Tomasetti Group
330 N. Andrews Ave., Suite 450 • Ft. Lauderdale, FL 33301
Tel. (954) 522-3690 • Fax (954) 522-3691 • COA # 7519
Website: www.TheTTGroup.com

Copyright © 2006 Thornton-Tomasetti Group, Inc.
6.8 & HR SYSTEMS LICENSED BY SOUTHERN SHUTTER ASSOCIATION

6.8 & HR ALUM. ACCORDION SHUTTERS

5114 COMMERCIAL WAY
SPRING HILL, FL 34606
PHONE: (352) 596-8583
FAX: (352) 596-8535

FLORIDA HURRICANE PRODUCTS, Inc.

J.W. Knezevich
Professional Engineer
FL License No.: PE 0041961

APR 24 2006

revisions

no	date	by	description
0	06/30/05	NW	PREVIOUSLY DRAWING NO. 03-258
1	12/16/05	VJK	NEW COMPONENTS

SSA I.D. # 0604240537 6D

date 06/30/2005
scale AS NOTED
drawn by MCR
design by JWK
checked by JWK
drawing no. 06-385
sheet 13 of 13

Print Information: P:\FL1\KA\CADD\Associations\SSA\FHP\06-385\R1-sub\06-385-13.dwg MCantu 04/24/2006 01:15:53pm 04/24/06 13:12