MIAMI-DADE COUNTY

BUILDING CODE COMPLIANCE OFFICE (BCCO)
PRODUCT CONTROL DIVISION

MIAMI-DADE COUNTY, FLORIDA
METRO-DADE FLAGLER BUILDING
140 WEST FLAGLER STREET, SUITE 1603
MIAMI, FLORIDA 33130-1563
(305) 375-2901 FAX (305) 375-2908
www.buildingcodeonline.com

NOTICE OF ACCEPTANCE (NOA)

M. Q. Windows
1855 Griffin Road, Suite A-274
Dania, Fl. 33004

SCOPE:

This NOA is being issued under the applicable rules and regulations governing the use of construction materials. The documentation submitted has been reviewed by Miami-Dade County Product Control Division and accepted by the Board of Rules and Appeals (BORA) to be used in Miami Dade County and other areas where allowed by the Authority Having Jurisdiction (AHJ).

This NOA shall not be valid after the expiration date stated below. The Miami-Dade County Product Control Division (In Miami Dade County) and/or the AHJ (in areas other than Miami Dade County) reserve the right to have this product or material tested for quality assurance purposes. If this product or material fails to perform in the accepted manner, the manufacturer will incur the expense of such testing and the AHJ may immediately revoke, modify, or suspend the use of such product or material within their jurisdiction. BORA reserves the right to revoke this acceptance, if it is determined by Miami-Dade County Product Control Division that this product or material fails to meet the requirements of the applicable building code.

This product is approved as described herein, and has been designed to comply with the Florida Building Code, including the High Velocity Hurricane Zone.

DESCRIPTION: Series "JS" Fixed Shaped Outward Mahogany Wood Window – L.M.I.

APPROVAL DOCUMENT: Drawing No. **JS-2-OUT**, titled "JS Series Wood Fixed Windows Sash Outward" Sheets 1 through 12 of 12, dated 01/10/99 and last revised on 05/12/06, prepared by manufacturer, signed and sealed by Walter A. Tillit Jr. P.E., bearing the Miami-Dade County Product Control Revision stamp with the Notice of Acceptance number and expiration date by the Miami-Dade County Product Control Division.

MISSILE IMPACT RATING: Large Missile Impact Resistant

LABELING: Each unit shall bear a permanent label with M.Q. Windows, Montreal, Quebec, Canada and following statement: "Miami-Dade County Product Control Approved", unless otherwise noted herein.

RENEWAL of this NOA shall be considered after a renewal application has been filed and there has been no change in the applicable building code negatively affecting the performance of this product.

TERMINATION of this NOA will occur after the expiration date or if there has been a revision or change in the materials, use, and/or manufacture of the product or process. Misuse of this NOA as an endorsement of any product, for sales, advertising or any other purposes shall automatically terminate this NOA. Failure to comply with any section of this NOA shall be cause for termination and removal of NOA.

ADVERTISEMENT: The NOA number preceded by the words Miami-Dade County, Florida, and followed by the expiration date may be displayed in advertising literature. If any portion of the NOA is displayed, then it shall be done in its entirety.

INSPECTION: A copy of this entire NOA shall be provided to the user by the manufacturer or its distributors and shall be available for inspection at the job site at the request of the Building Official.

This NOA **revises & renews NOA # 99-1228.03** consists of this page 1 and evidence pages E-1 & E-2, as well as approval document mentioned above.

The submitted documentation was reviewed by **Jaime D. Gascon, P.E.**

PRODUCT CONTROL ACCEPTED

J. Gascon
5/26/06

M. Q. Windows

NOTICE OF ACCEPTANCE: EVIDENCE SUBMITTED

A. DRAWINGS

1. Manufacturer's die drawings and sections.
2. Drawing No. **JS-2-OUT**, titled "JS Series Wood Fixed Windows Sash Inward" Sheets 1 through 12 of 12, dated 01/10/99 and last revised on 05/12/06, prepared by manufacturer, signed and sealed by Walter A. Tillit Jr. P.E

B. TESTS

1. Test Report No. **HTL-0118-1006-98 (Sp#4 TAS-201/203), HTl-0118-1103-98 ((Sp#1 & Sp#2(TAS-202)) and (Sp#5, TAS-201,202,203), HTL -0118-1298-98(Sp#6, # 7(TAS-201/203)) , HTL-0118-1218-98 (Sp#6 (TAS-201/203))** prepared by Hurricane Testing Laboratories, dated 10/15//98 thru 07-06-99, signed and sealed by Timothy S. Marshall, P.E., for the following tests: 1) Air Infiltration Test, per TAS-202-94
   2) Uniform Static Air Pressure Test, Loading per TAS- 202-94
   3) Water Resistance Test, per TAS-202-94. (approved for HJ430 sill only, all other sills not approved for water infiltration)
   4) Large Missile Impact test, per FBC TAS 201-94
   5) Cyclic loading test, per FBC and TAS 203-94
   6) Forced Entry Test, per FBC and TAS 202-94

   along with manufacturers parts and section drawings marked by Hurricane Testing Laboratory Inc. "Submitted under NOA No. 99-1228.03"

C. CALCULATIONS

1. Revised Anchor verification calculations, complying w/ FBC-2004, prepared by Tilteco Inc., dated 09/13/05, signed and sealed by Walter A. Tillit, Jr., P.E.
2. Glazing complies w/ ASTME-1300-98

D. QUALITY ASSURANCE

1. Miami Dade Building Code Compliance Office (BCCO)

E. MATERIAL CERTIFICATIONS

1. Notice of Acceptance No. 01-0205.02, issued to Solutia Inc, for "Saflex / KeepsafeMax interlayer", expiring on 05/21/11.

F. STATEMENTS

1. Statement letter of conformance to FBC 2004 dated March 06, 2006, signed & sealed by Walter A. Tillit, P.E.
2. Statement letter of conformance, dated 11-24-1999, signed and sealed by Walter A. Tillit Jr., P. E. "Submitted under NOA No. 99-1228.03"
3. Statement letter of no financial interest, dated January 08, 2001, signed and sealed by Walter A. Tillit Jr., P. E. "Submitted under NOA No. 99-1228.03"

Jaime D. Gascon, P.E.
Chief, Product Control Division
NOA No 06-0519.01
Expiration Date: March 01, 2011
Approval Date: June 20, 2006

NOTICE OF ACCEPTANCE: EVIDENCE SUBMITTED

4. Statement letter of compliance dated March 1, 1999, issued by Hurricane Testing laboratory, signed and sealed by Timothy S. Marshall, P.E. "Submitted under NOA No. 99-1228.03"
5. Addendum letter dated 04-27-00 for **HTL-0118-1103-98 (Sp#1) and 0118-1006-98(Sp#2),** prepared by Hurricane Testing Laboratories, signed and sealed by Vinu Abraham, P.E.
"Submitted under NOA No. 99-1228.03"

G. OTHER

1. Notice of Acceptance **No. # 99-1228.03, M.Q. Windows, Inc.**, "JS Fixed Shaped Mahogany Windows-Large Missile Impact", approved 03/01/01 and expiring 03/01/06.

Jaime D. Gascon, P.E.
Chief, Product Control Division
NOA No 06-0519.01
Expiration Date: March 01, 2011
Approval Date: June 20, 2006

RECTANGULAR FIXED UNITS

CONFIGURATIONS: O

GENERAL NOTES:

1- THIS PRODUCT IS DESIGNED TO COMPLY WITH THE PROVISIONS OF THE HIGH VELOCITY HURRICANE ZONE (HVHZ) OF THE 2004 EDITION OF THE FLORIDA BUILDING CODE WITH THE 2005 SUPPLEMENT.

2- THIS PRODUCT IS LARGE MISSILE IMPACT RESISTANT AND HAS BEEN TESTED IN ACCORDANCE WITH THE HIGH VELOCITY HURRICANE ZONE PROTOCOLS TAS201, 202 AND 203. NO SHUTTERS ARE REQUIRED.

3- WOOD BUCKS (BY OTHERS) AND OPENINGS MUST BE DESIGNED BY THE PROFESSIONAL OF RECORD TO PROPERLY TRANSFER WIND LOADS TO THE MAIN STRUCTURE.

4- SPECIFIED ANCHOR EMBEDMENT TO BASE MATERIAL SHALL BE BEYOND WALL FINISH OR STUCCO.

5- IN ORDER TO VERIFY THAT ANCHORS FOR THIS PRODUCT WERE NOT OVERSTRESSED AS TESTED, A 33 % ALLOWABLE STRESS INCREASE **WAS NOT** USED IN THEIR ANALYSIS. HOWEVER, A LOAD DURATION FACTOR OF Cd = 1.6 WAS USED TO VERIFY THEIR SPACING IN WOOD SUBSTRATES.

VIEWED FROM THE OUTSIDE
WOOD: Mahogany

DESIGN PRESSURE
Positive Pressure: +58 psf Negative Pressure −68 psf
NOTE: Refer to table 1 for minimum and maximum sizes width (FW) & height (FH)

Information on this page applies to cross sections 1 & 20 (sash "inward") ONLY

Frame Size vs d.l.o. relation is:
Long d.l.o.= long frame dimension - 9"
Short d.l.o.=short Frame dimension- 9"

NOTE:
See section 4 on pages 6 & 7.

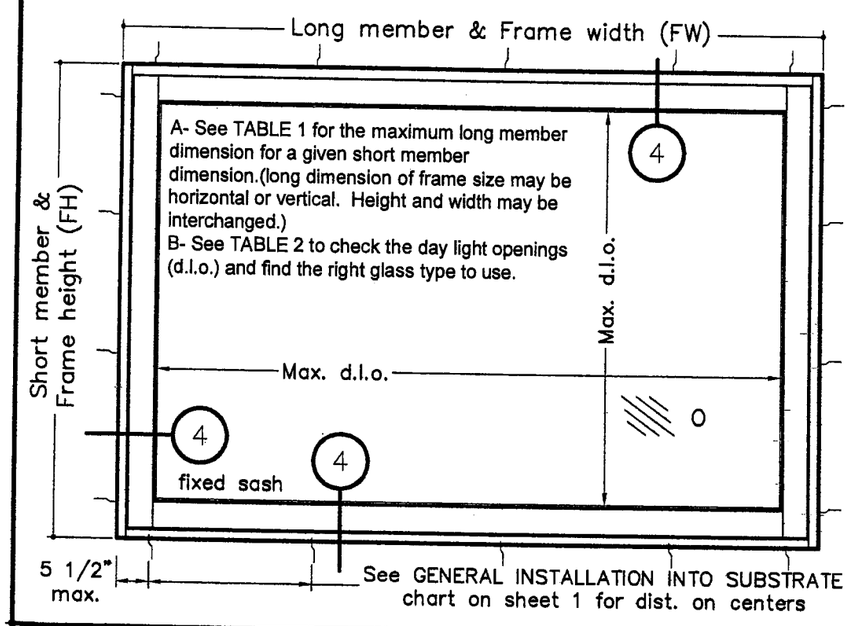

TABLE 2

GLASS TYPES FOR FRAME DIMENSIONS OF TABLE 1 OR FOR BASIC RECTANGLES GIVEN ON SHEETS 2, 3, 4 AND 5 OF THIS DRAWING

If, for a given long member d.l.o., the actual short member daylight opening exceeds the maximum dimension indicated on table 2, then
TYPE 2 heat strenghtened laminated glass
[3/16" HS - .09" PVB interlayer, Saflex IIIG by Solutia - 3/16" HS]
OR TYPE 3 full tempered laminated glass
[3/16" FT - .09" PVB interlayer, Saflex IIIG by Solutia - 3/16" FT]
MUST BE USED

Maximum daylight opening for type 1 laminated glass
[3/16" AN - .09" PVB interlayer, Saflex IIIG by Solutia - 3/16" HS]

Given Long member d.l.o. up to (in.)	Max. short member d.l.o. (in.)	Given Long member d.l.o. up to (in.)	Max. short member d.l.o. (in.)
47 1/4	47.244	*90 1/2*	28.150
51	41.339	*94 1/2*	27.953
55	38.386	*98 1/2*	27.559
59	36.220	*102 1/4*	27.362
63	34.055	*106 1/4*	26.969
66	32.480	*110 1/4*	26.772
70 3/4	31.496	*114*	26.575
74 3/4	30.512	*118*	26.378
78 3/4	29.528	*122*	26.220
82 1/2	28.937	*126*	26.102
86 1/2	28.543	*130*	25.984

GENERAL INSTALLATION INTO SUBSTRATE

Using PDF-FS-05/D Inst. Bracket

Fastener	Into 2x wood buck	Into concrete
(1) 1/4" x 2 3/4" Elco/Textron Tapcon screws	X	max. o/c 10 1/2" min. emb. 1 1/4"
(2) #12 x 1 1/2" wood screw	max. o/c 11" min. emb. 1 1/4"	X

Direct Mount (At sill only)

Fastener	Into 2x wood buck	Into concrete
(1) 1/4" x 2 3/4" Elco/Textron Tapcon screws	X	max. o/c 6" min. emb. 1 1/4"
(1) #14 x 2" wood screw	max. o/c 4" min. emb. 1 1/4"	X

-Materials, but not limited to steel & steel screws that come in contact with other dissimilar materials shall meet with section 2003.8.4 of the Florida Building Code.

TABLE 1

MAXIMUM SHORT & LONG FRAME DIMENSIONS FOR RECTANGULAR UNITS

GIVEN FRAME SHORT MEMBER dimension (in.) min - max.	MAX. FRAME LONG MEMBER dimension (in.) max.
35 - 40.00	139.000
34 - 41.49	134.000
33 - 43.10	129.000
32 - 44.04	124.000
31 - 44.56	119.000
30 - 45.17	114.000
29.68 - 45.375	112.375
0 - 45.38	112.374
0 - 46.00	108.167
0 - 47.00	102.447
0 - 48.00	97.783
0 - 49.00	93.927
0 - 50.00	90.703
0 - 51.00	87.983
0 - 52.00	85.672
0 - 53.00	83.695
0 - 54.00	81.997
0 - 55.00	80.533
0 - 56.00	79.267
0 - 60.00	75.690
0 - 64.00	73.719
0 - 68.00	72.747
0 - 70.00	72.526
0 -72.00	72.440
0 -72.438	72.438

GENERAL INSTALLATION NOTES

All PDF-FS-05D Installation brackets screwed to the window frame using (2) #10 x 1" a.t. wood screws w/ 7/8" min. embedment.

Spacing: All fasteners spacing is 5 1/2" from corners and o/c as specified in GENERAL INSTALLATION INTO SUBSTRATE chart on sheet 1.

Min. edge distance is 2 ½ " for concrete fasteners .

Shim Space: 3/8" MAX. @ head, jambs & sill. Use std shims behind as required.

MQ WINDOWS OF EUROPE AND THE AMERICAS
1855 GRIFFIN ROAD, SUITE A-271
DANIA, FL 33004

JS SERIES WOOD FIXED WINDOWS SASH OUTWARD

Drawing no.: JS-2-OUT	
Scale: NONE	Drawn by: S. Marcotte
Date drawn: 01/10/99	Date revised: 05/12/06
File: JS-2-OUT	Page: 1 / 12

STRUCTURALLY REVIEWED BY:

WALTER A. TILLIT JR., P.E.
STRUCTURAL ENGINEER
FL. LIC.NO. 44167

MAY 17 2006

TILTECO INC.
TILLIT TESTING & ENGINEERING COMPANY
6355 NW 36th STREET, STE. 305
MIAMI, FLORIDA 33166
FL E.B. LICENSE No. 0006719

PRODUCT REVISED
to complying with the Florida Building Code
Acceptance No. 06-0519.01
Expiration Date 03/01/11
By
Miami Dade Product Control Division

RECTANGULAR FIXED UNITS

CONFIGURATIONS: O

MAX. FW & FH AS INDICATED

Information on this page applies to cross sections 4 & 23 (sash "outward") ALUMINUM THRESHOLD ONLY

VIEWED FROM THE OUTSIDE
WOOD: Mahogany

DESIGN PRESSURE
Positive Pressure: +58 psf Negative Pressure −68 psf
maximum frame width (FW) and height (FH) as indicated NO SHUTTERS ARE REQUIRED.

See GENERAL INSTALLATION INTO SUBSTRATE chart on sheet 1 for dist. on centers

5 1/2" max.

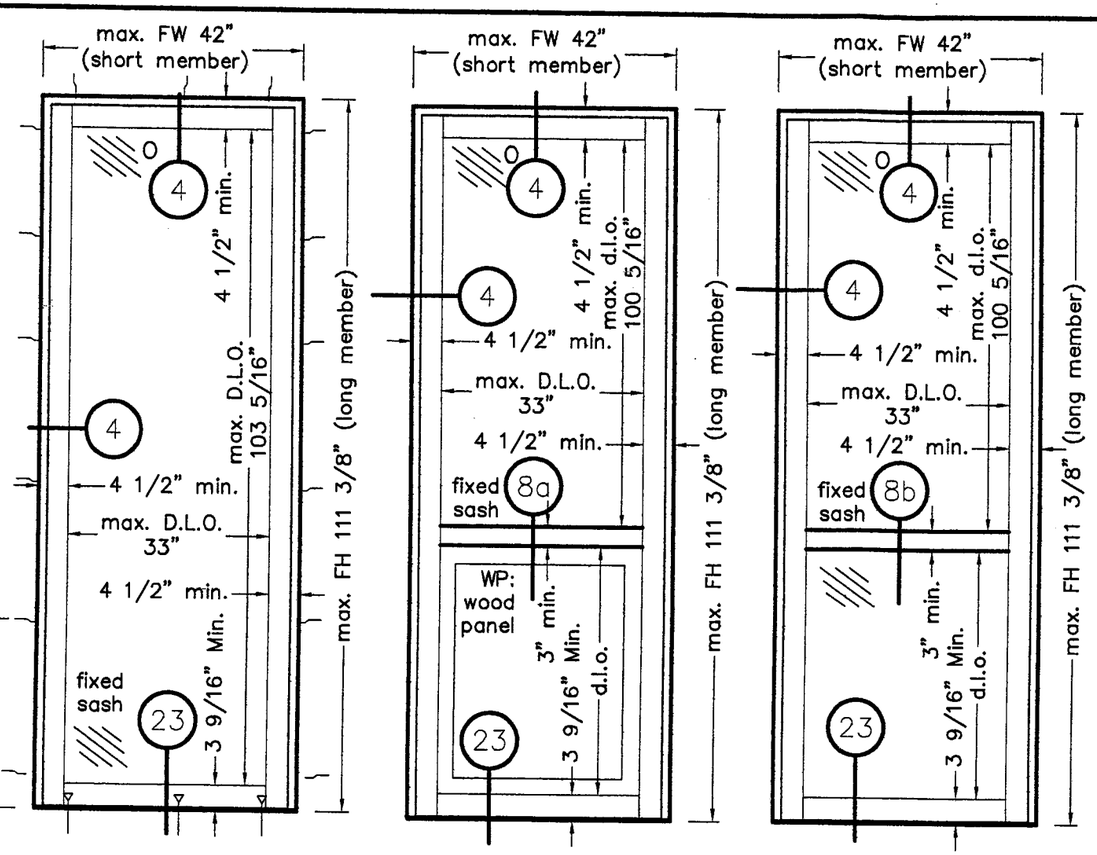

TYPE OF GLASS: SINGLE, 15/32" LAMINATED
For sizes shown on table 2, sheet 11: TYPE 1, MADE OF: 3/16"(AN)-0.090" PVB Saflex III G interlayer by Solutia-3/16"(HS) For sizes over those on table 2: TYPE 2, MADE OF: 3/16"(HS)-0.090" PVB Saflex III G interlayer by Solutia-3/16"(HS) OR TYPE 3, MADE OF: 3/16"(FT)-0.090" PVB Saflex III G interlayer by Solutia-3/16"(FT)
WP: 1 3/4" RAISED WOOD PANEL
Solid Mahogany, MAX. D.L.O. AREA: 7.81 sqf. See detail on sheet 9

Spacing: All fasteners spacing is 5 1/2" from corners and o/c as specified in GENERAL INSTALLATION INTO SUBSTRATE chart on sheet 1.

Shim Space: 3/8" MAX. @ head, jambs & sill. Use std shims behind as required. Use 4 x brackets at each end of an astragal meeting.

Min. edge distance is 2 ½ " for concrete fasteners .

NOTE:
See sections 4, 8a, 8b, 23, 25 and 27 on pages 6 & 7 respectively.

See GENERAL INSTALLATION INTO SUBSTRATE chart on sheet 1 for dist. on centers

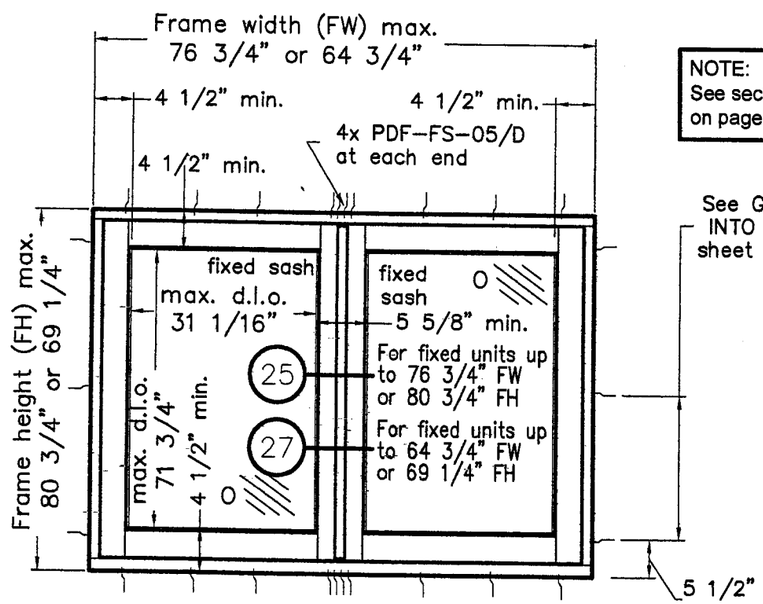

OPTIONAL: FIXED ASTRAGAL

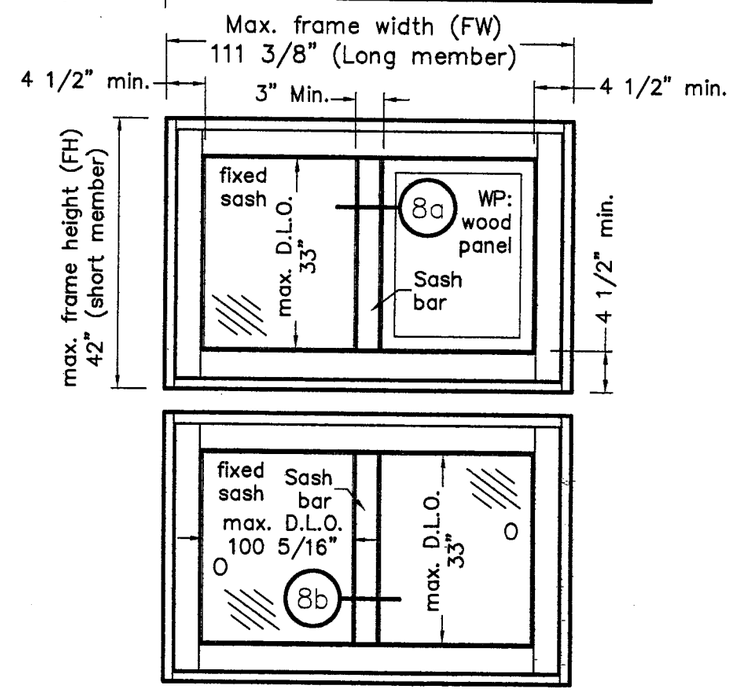

OPTIONAL: SASH BAR

MQ WINDOWS OF EUROPE AND THE AMERICAS
1855 GRIFFIN ROAD, SUITE A-271
DANIA, FL 33004

JS SERIES WOOD FIXED WINDOWS SASH OUTWARD

Drawing no.: JS-2-OUT	
Scale: NONE	Drawn by: S. Marcotte
Date drawn: 01/10/99	Date revised: 05/12/06
File: JS-2-OUT	Page: 2 / 12

STRUCTURALLY REVIEWED BY:

WALTER A. TILLIT JR., P.E.
STRUCTURAL ENGINEER
FL. LIC.NO. 44167

MAY 17 2006

TILTECO INC.
TILLIT TESTING & ENGINEERING COMPANY
6355 NW 36th STREET, STE. 305
MIAMI, FLORIDA 33166
FL E.B. LICENSE No. 0006719

PRODUCT REVISED
as complying with the Florida Building Code
Acceptance No. 06-0519.01
Expiration Date 03/01/11
By
Miami-Dade Product Control Division

TRIANGULAR FIXED SHAPES

CONFIGURATIONS: O

VIEWED FROM THE OUTSIDE
WOOD: Mahogany

DESIGN PRESSURE
Positive Pressure: +58 psf Negative Pressure −68 psf
NOTE: Refer to basic rectangles for minimum and maximum sizes width (FW) & height (FH) NO SHUTTERS ARE REQUIRED.

TO DETERMINE THE MAX. FW AND FH: SHAPES ON THIS PAGE MUST BE INSCRIBED INTO ANY ONE OF THE FOLLOWING BASIC RECTANGLES
42" (FW) x 111 3/8" (FH)
111 3/8" (FW) x 42" (FH)
72 7/16" (FW) x 72 7/16" (FH)

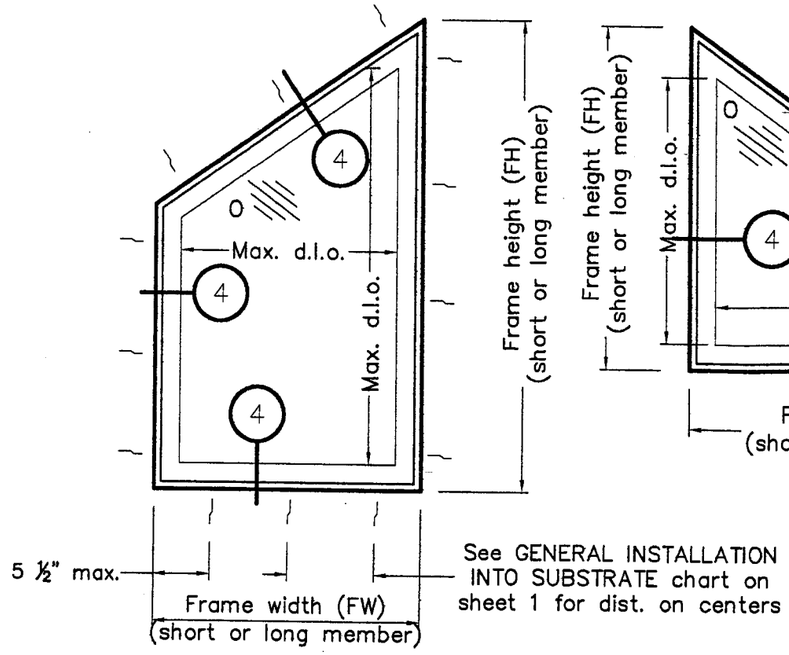

See GENERAL INSTALLATION INTO SUBSTRATE chart on sheet 1 for dist. on centers

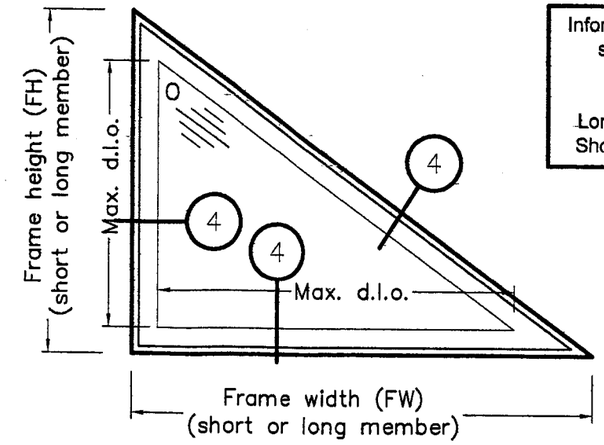

Information on this page applies to cross section 4 (sash "outward") ONLY

Frame Size vs d.l.o. relation is:
Long d.l.o.= long frame dimension - 9"
Short d.l.o.=short Frame dimension- 9"

NOTE:
See section 4 on pages 6 & 7.

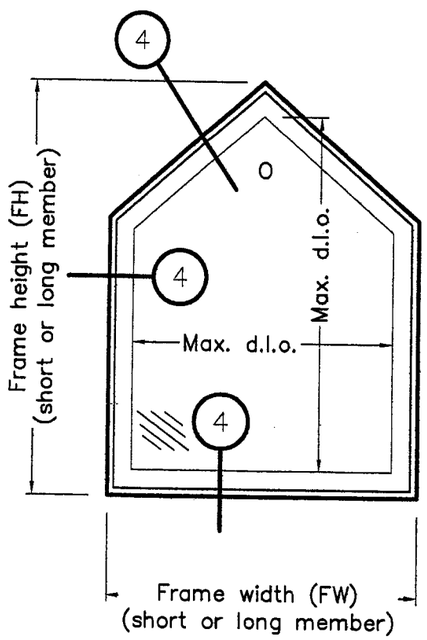

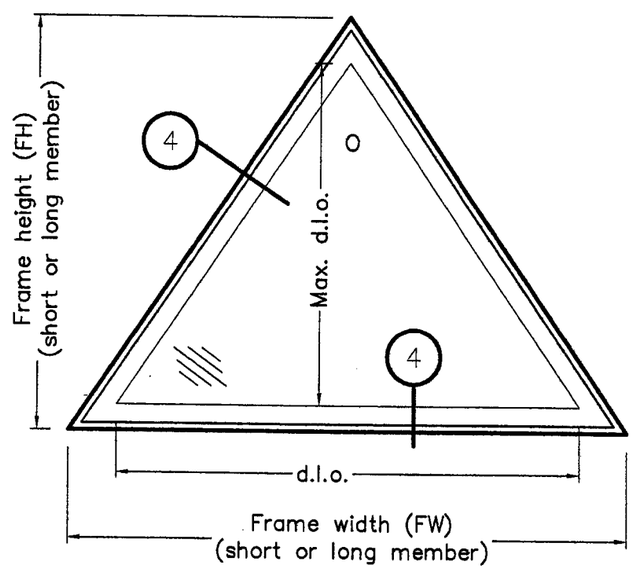

TYPE OF GLASS: SINGLE, 15/32" LAMINATED
The rectangular glass d.l.o. circumscribing the shaped unit must be taken and checked into table 2, sheet 11/12 For sizes shown on table 2, sheet 11: TYPE 1, MADE OF: 3/16" (AN) - 0.090" PVB Saflex III G interlayer by Solutia-3/16"(HS) For sizes over those on table 2: TYPE 2, MADE OF: 3/16"(HS) - 0.090" PVB Saflex III G interlayer by Solutia-3/16"(HS) OR TYPE 3, MADE OF: 3/16" (FT) - 0.090" PVB Saflex III G interlayer by Solutia-3/16"(FT)
WP: 1 3/4" RAISED WOOD PANEL
Solid Mahogany, MAX. D.L.O. AREA: 7.81 sqf. See detail on sheet 9

Spacing: All fasteners spacing is 5 1/2" from corners and o/c as specified in GENERAL INSTALLATION INTO SUBSTRATE chart on sheet 1.
Shim Space: 3/8" MAX. @ head, jambs & sill. Use std shims behind as required.
Min. edge distance is 2 ½ " for concrete fasteners .

MQ WINDOWS OF EUROPE AND THE AMERICAS
1855 GRIFFIN ROAD, SUITE A-271
DANIA, FL 33004

JS SERIES WOOD FIXED WINDOWS SASH OUTWARD

Drawing no.: JS-2-OUT	
Scale: NONE	Drawn by: S. Marcotte
Date drawn: 01/10/99	Date revised: 05/12/06
File: JS-2-OUT	Page: 3 / 12

STRUCTURALLY REVIEWED BY:

WALTER A. TILLIT JR., P.E.
STRUCTURAL ENGINEER
FL. LIC.NO. 44167

MAY 17 2006

TILTECO INC.
TILLIT TESTING & ENGINEERING COMPANY
6355 NW 36th STREET, STE. 305
MIAMI, FLORIDA 33166
FL E.B. LICENSE No. 0006719

PRODUCT REVISED
as complying with the Florida Building Code
Acceptance No 06-0519.01
Expiration Date 03/01/11
By
Miami/Dade Product Control Division

ARCHED FIXED SHAPES

CONFIGURATIONS: O

VIEWED FROM THE OUTSIDE
WOOD: Mahogany

DESIGN PRESSURE
Positive Pressure: +58 psf Negative Pressure −68 psf
NOTE: Refer to basic rectangles for minimum and maximum sizes width (FW) & height (FH) NO SHUTTERS ARE REQUIRED.

TO DETERMINE THE MAX. FW AND FH: SHAPES ON THIS PAGE MUST BE INSCRIBED INTO ANY ONE OF THE FOLLOWING BASIC RECTANGLES
42" (FW) x 111 3/8" (FH)
111 3/8" (FW) x 42" (FH)
72 7/16" (FW) x 72 7/16" (FH)
76 3/4" (FW) x 58 1/2" (FH)

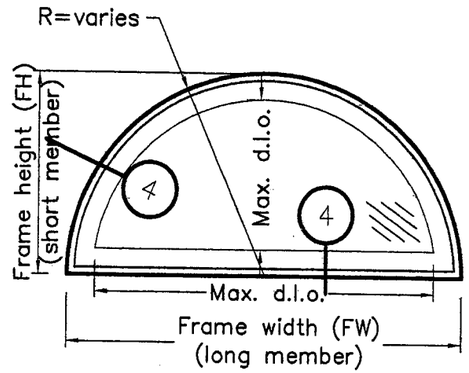

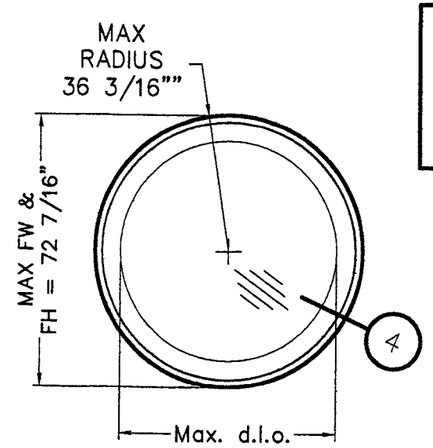

Information on this page applies to cross section 4 (sash "outward") ONLY

Frame Size vs d.l.o. relation is:
Long d.l.o.= long frame dimension - 9"
Short d.l.o.=short Frame dimension- 9"

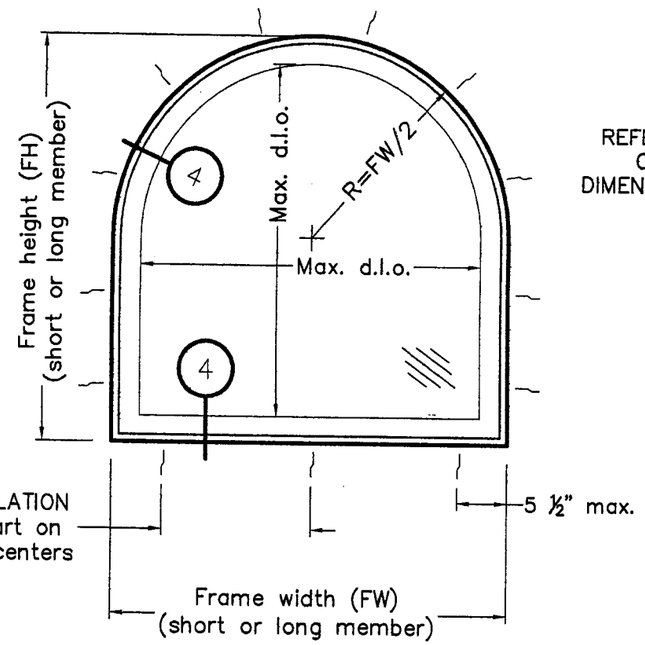

NOTE:
See section 4 on pages 6 & 7.

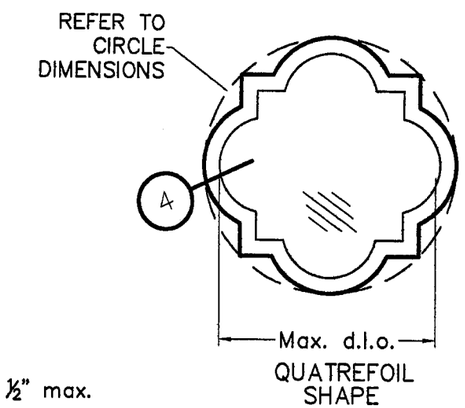

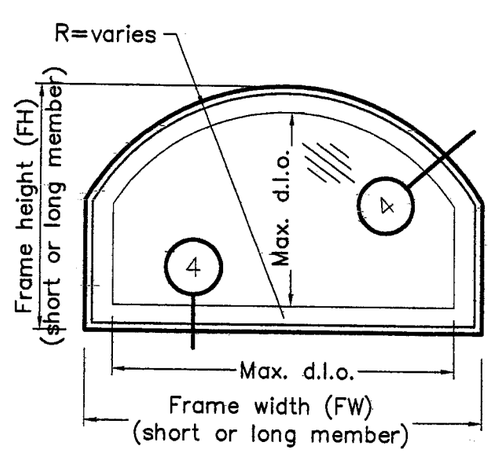

TYPE OF GLASS: SINGLE, 15/32" LAMINATED
The rectangular glass d.l.o. circumscribing the shaped unit must be taken and checked into table 2, sheet 11/12 For sizes shown on table 2, sheet 11: TYPE 1, MADE OF: 3/16" (AN) - 0.090" PVB Saflex III G interlayer by Solutia-/16"(HS) For sizes over those on table 2: TYPE 2, MADE OF: 3/16"(HS) - 0.090" PVB Saflex III G interlayer by Solutia-3/16"(HS) OR TYPE 3, MADE OF: 3/16" (FT) - 0.090" PVB Saflex III G interlayer by Solutia-3/16"(FT)
WP: 1 3/4" RAISED WOOD PANEL
Solid Mahogany, MAX. D.L.O. AREA: 7.81 sqf. See detail on sheet 9

Spacing: All fasteners spacing is 5 1/2" from corners and o/c as specified in GENERAL INSTALLATION INTO SUBSTRATE chart on sheet 1.
Shim Space: 3/8" MAX. @ head, jambs & sill. Use std shims behind as required.
Min. edge distance is 2 ½ " for concrete fasteners .

MQ WINDOWS OF EUROPE AND THE AMERICAS
1855 GRIFFIN ROAD,
SUITE A-271
DANIA, FL 33004

JS SERIES WOOD FIXED WINDOWS SASH OUTWARD

Drawing no.: JS-2-OUT	
Scale: NONE	Drawn by: S. Marcotte
Date drawn: 01/10/99	Date revised: 05/12/06
File: JS-2-OUT	Page: 4 / 12

STRUCTURALLY REVIEWED BY:

WALTER A. TILLIT JR., P.E.
STRUCTURAL ENGINEER
FL. LIC.NO. 44167

MAY 17 2006

TILTECO INC.
TILLIT TESTING & ENGINEERING COMPANY
6355 NW 36th STREET, STE. 305
MIAMI, FLORIDA 33166
FL E.B. LICENSE No. 0006719

PRODUCT REVISED
as complying with the Florida Building Code
Acceptance No 06-0519.01
Expiration Date 09/01/11
By
Miami-Dade Product Control Division

OVAL FIXED SHAPES

CONFIGURATIONS: O

VIEWED FROM THE OUTSIDE
WOOD: Mahogany

DESIGN PRESSURE
Positive Pressure: +58 psf Negative Pressure −68 psf
NOTE: Refer to basic rectangles for minimum and maximum sizes width (FW) & height (FH) NO SHUTTERS ARE REQUIRED.

TO DETERMINE THE MAX. FW AND FH: SHAPES ON THIS PAGE MUST BE INSCRIBED INTO ANY ONE OF THE FOLLOWING BASIC RECTANGLES
42" (FW) x 111 3/8" (FH)
111 3/8" (FW) x 42" (FH)
72 7/16" (FW) x 72 7/16" (FH)
76 3/4" (FW) x 58 1/2" (FH)

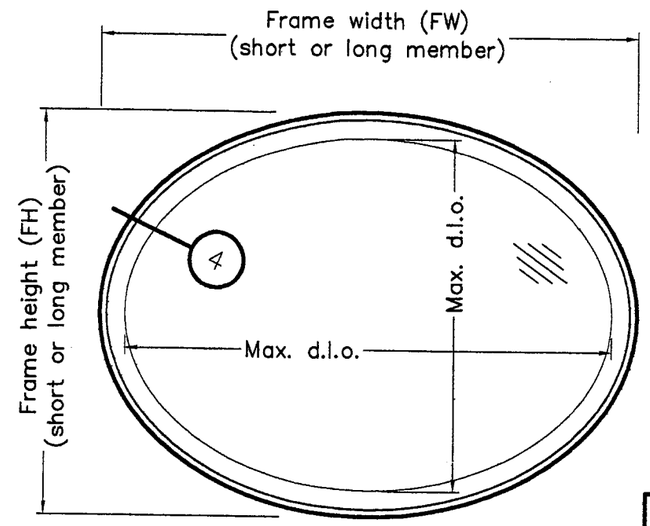

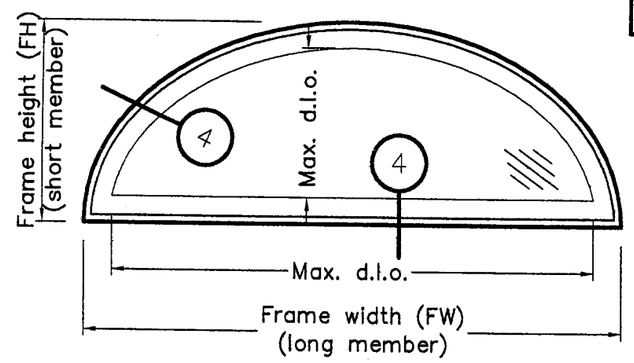

Information on this page applies to cross section 4 (sash "outward") ONLY

Frame Size vs d.l.o. relation is:
Long d.l.o.= long frame dimension - 9"
Short d.l.o.=short Frame dimension- 9"

NOTE:
See section 4 on pages 6 & 7.

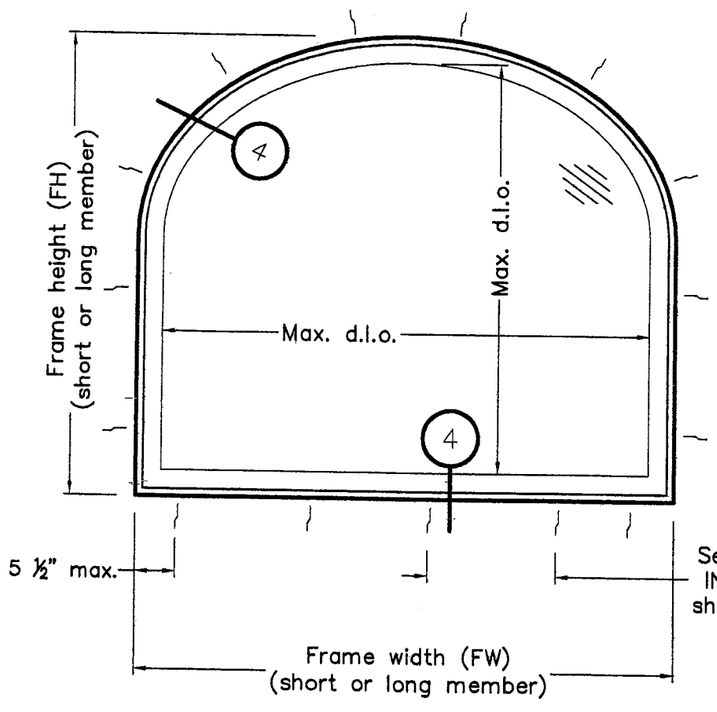

See GENERAL INSTALLATION INTO SUBSTRATE chart on sheet 1 for dist. on centers

TYPE OF GLASS: SINGLE, 15/32" LAMINATED
The rectangular glass d.l.o. circumscribing the shaped unit must be taken and checked into table 2, sheet 11/12 For sizes shown on table 2, sheet 11: TYPE 1, MADE OF: 3/16" (AN) - 0.090" PVB Saflex III G interlayer by Solutia-/16"(HS) For sizes over those on table 2: TYPE 2, MADE OF: 3/16"(HS) - 0.090" PVB Saflex III G interlayer by Solutia-3/16"(HS) OR TYPE 3, MADE OF: 3/16" (FT) - 0.090" PVB Saflex III G interlayer by Solutia-3/16"(FT)
WP: 1 3/4" RAISED WOOD PANEL
Solid Mahogany, MAX. D.L.O. AREA: 7.81 sqf. See detail on sheet 9

Spacing: All fasteners spacing is 5 1/2" from corners and o/c as specified in GENERAL INSTALLATION INTO SUBSTRATE chart on sheet 1.
Shim Space: 3/8" MAX. @ head, jambs & sill. Use std shims behind as required.
Min. edge distance is 2 ½ " for concrete fasteners .

MQ WINDOWS OF EUROPE AND THE AMERICAS
1855 GRIFFIN ROAD, SUITE A-271
DANIA, FL 33004

JS SERIES
WOOD FIXED WINDOWS
SASH OUTWARD

Drawing no.: JS-2-OUT	
Scale: NONE	Drawn by: S. Marcotte
Date drawn: 01/10/99	Date revised: 05/12/06
File: JS-2-OUT	Page: 5 / 12

STRUCTURALLY REVIEWED BY:

WALTER A. TILLIT JR., P.E.
STRUCTURAL ENGINEER
FL. LIC.NO. 44167

MAY 17 2006

TILTECO INC.
TILLIT TESTING & ENGINEERING COMPANY
6355 NW 36th STREET, STE. 305
MIAMI, FLORIDA 33166
FL E.B. LICENSE No. 0006719

PRODUCT REVISED
as complying with the Florida Building Code
Acceptance No. 06-0519.01
Expiration Date 03/01/11
By Miami-Dade Product Control Division

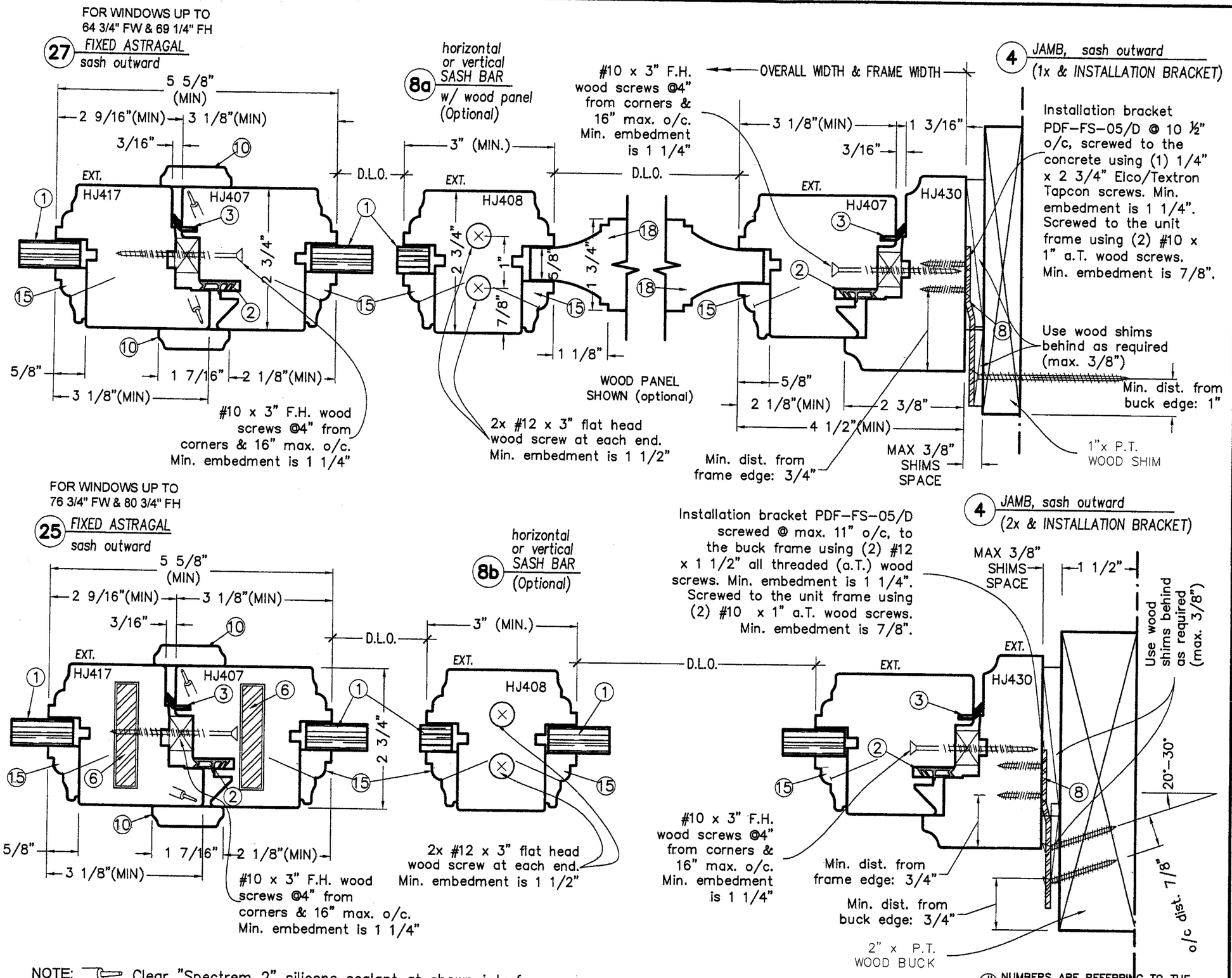

NOTE: Clear "Spectrem 2" silicone sealant at shown interfaces

NUMBERS ARE REFERRING TO THE ASSEMBLY LISTS ON PAGES 9 TO 11

MQ WINDOWS OF EUROPE AND THE AMERICAS
1855 GRIFFIN ROAD, SUITE A-271
DANIA, FL 33004

JS SERIES WOOD FIXED WINDOWS SASH OUTWARD

Drawing no.: JS-2-OUT	
Scale: NONE	Drawn by: S. Marcotte
Date drawn: 01/10/99	Date revised: 05/12/06
File: JS-2-OUT	Page: 6 / 12

STRUCTURALLY REVIEWED BY:

WALTER A. TILLIT JR., P.E.
STRUCTURAL ENGINEER
FL. LIC.NO. 44167

MAY 17 2006

TILLECO INC.
TILLIT TESTING & ENGINEERING COMPANY
6355 NW 36th STREET, STE. 305
MIAMI, FLORIDA 33166
FL E.B. LICENSE No. 0006719

PRODUCT REVISED
as complying with the Florida Building Code
Acceptance No. 06-0519.01
Expiration Date 03/01/11
By Miami-Dade Product Control Division

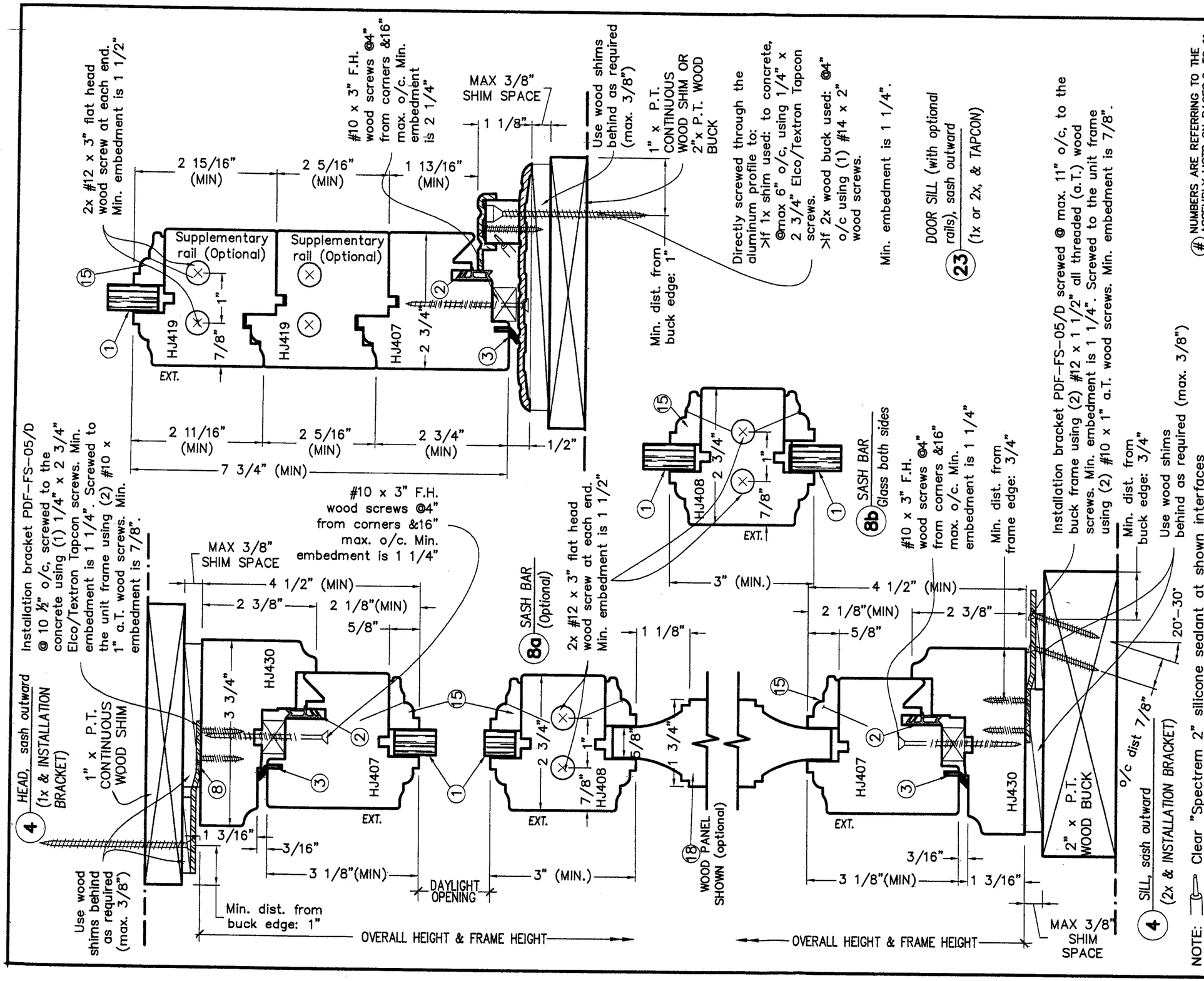

NUMBERS ARE REFERRING TO THE ASSEMBLY LISTS ON PAGES 9 TO 11

MQ WINDOWS OF EUROPE AND THE AMERICAS
1855 GRIFFIN ROAD, SUITE A-271
DANIA, FL 33004

JS SERIES WOOD FIXED WINDOWS SASH OUTWARD

Drawing no.: JS-2-OUT	
Scale: NONE	Drawn by: S. Marcotte
Date drawn: 01/10/99	Date revised: 05/12/06
File: JS-2-OUT	Page: 7 / 12

STRUCTURALLY REVIEWED BY:

WALTER A. TILLIT JR., P.E.
STRUCTURAL ENGINEER
FL. LIC.NO. 44167

MAY 17 2006

TILLECO INC.
TILLIT TESTING & ENGINEERING COMPANY
6355 NW 36th STREET, STE. 305
MIAMI, FLORIDA 33166
FL E.B. LICENSE No. 0006719

PRODUCT REVISED
as complying with the Florida Building Code
Acceptance No. 06-0519.01
Expiration Date 6/2/07
By
Miami Dade Product Control Division

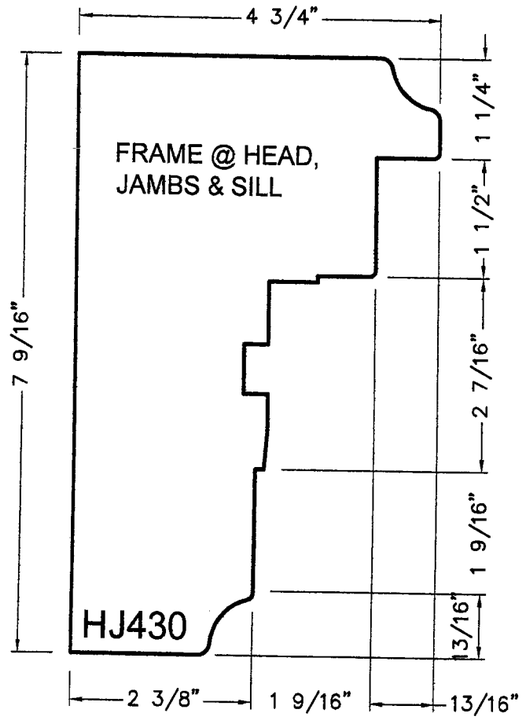

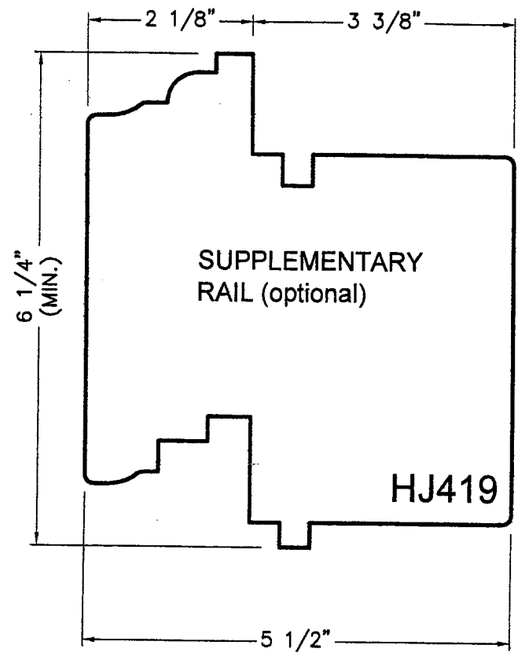

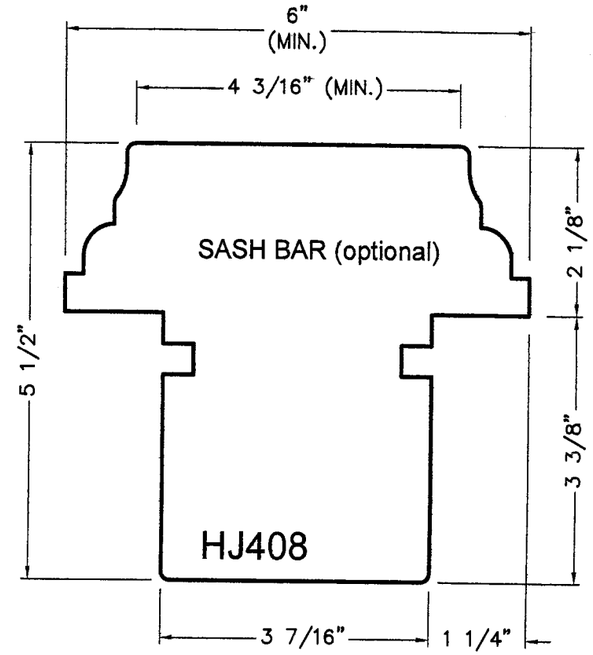

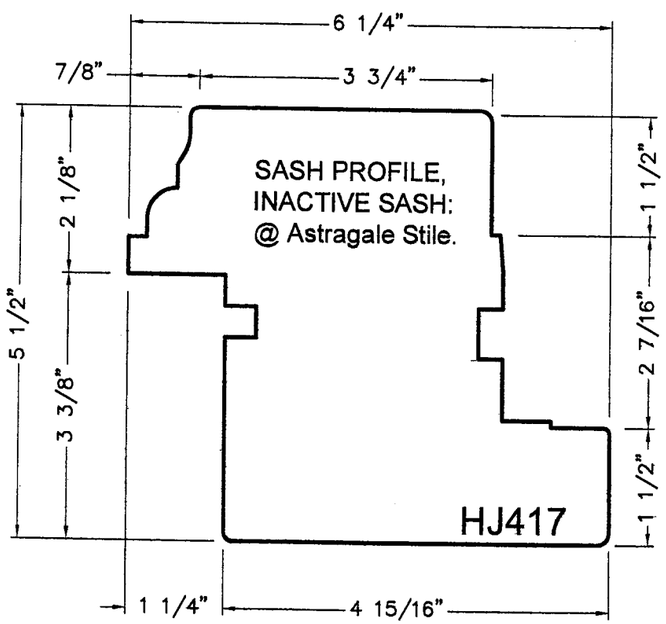

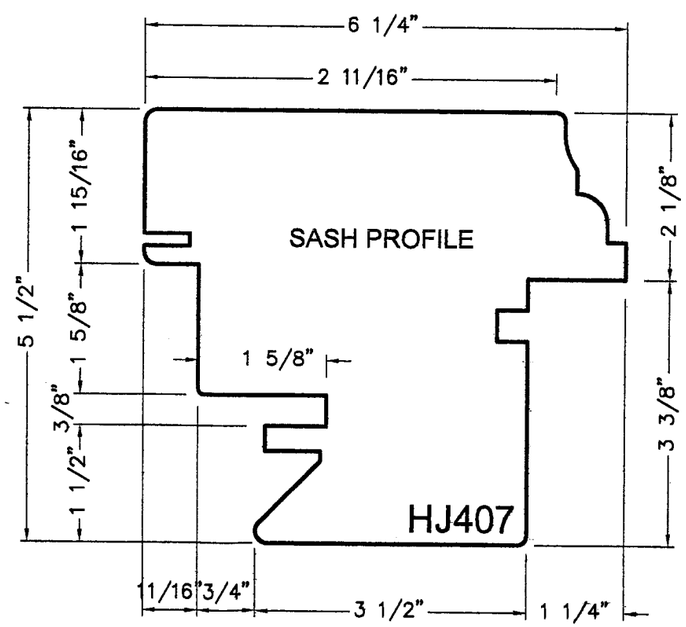

WOOD PROFILES

MQ WINDOWS OF EUROPE AND THE AMERICAS
1855 GRIFFIN ROAD,
SUITE A-271
DANIA, FL 33004

JS SERIES WOOD FIXED WINDOWS SASH OUTWARD

Drawing no.: JS-2-OUT	
Scale: NONE	Drawn by: S. Marcotte
Date drawn: 01/10/99	Date revised: 05/12/06
File: JS-2-OUT	Page: 8 / 12

STRUCTURALLY REVIEWED BY:

WALTER A. TILLIT JR., P.E.
STRUCTURAL ENGINEER
FL. LIC.NO. 44167

MAY 17 2006

TILTECO INC.
TILLIT TESTING & ENGINEERING COMPANY
6355 NW 36th STREET, STE. 305
MIAMI, FLORIDA 33166
FL E.B. LICENSE No. 0006719

PRODUCT REVISED
as complying with the Florida
Building Code
Acceptance No. 06-0519.01
Expiration Date 03/01/11
By
Miami-Dade Product Control
Division

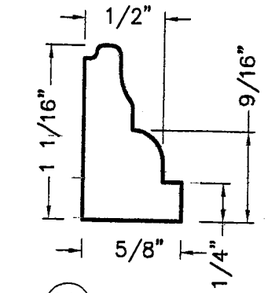

(15) GJ064
GLAZING BEAD

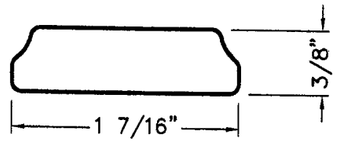

(10) ZJ142 ASTRAGAL MOULDING

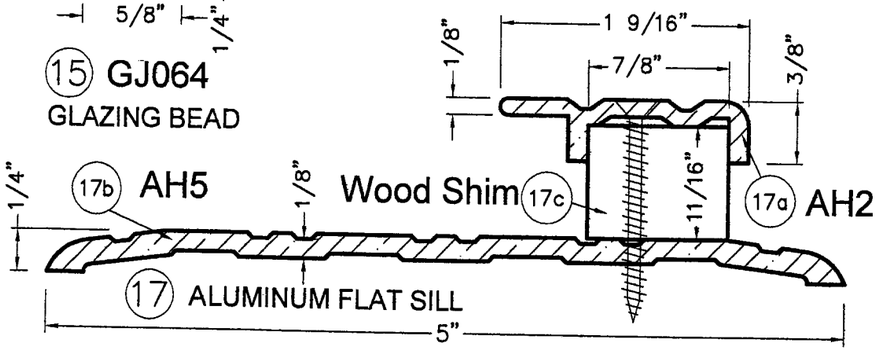

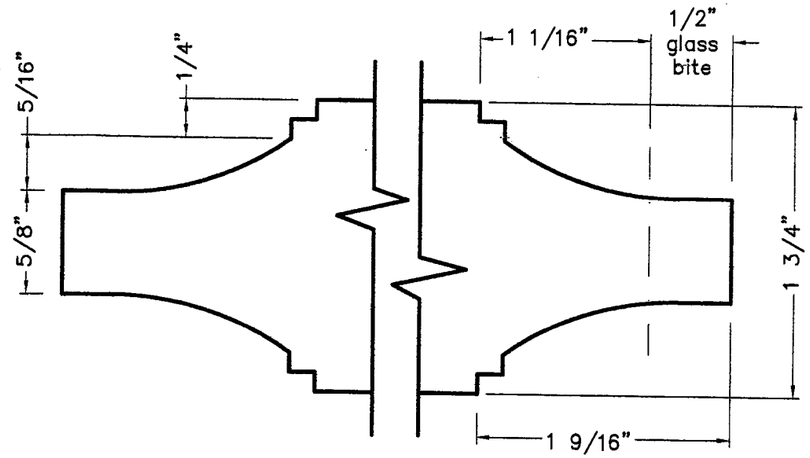

(18) PT001
RAISED WOOD PANEL

WOOD MOULDINGS

BILL OF MATERIALS (see also related cross sections details)

REF.	QTY	Component	DESCRIPTION	MATERIAL	DIMENSIONS	MEAN OF ATTACHMENT	LOCATION
(10)	2 per astragal meeting	Astragal moulding	ZJ142 astragal wood cover. Square cut at the ends.	Mahogany	3/8"(d) x 1 7/16"(w) x sash height	18 gauge, 5/8" galvanized finishing nails spaced 16" o/c.	SASH OUTWARD: One nailed on the interior face of the passive sash & one nailed on the exterior face of the active sash.
(15)	1 per glass edge	Glazing bead	GJ064 wood profile, mitre cut at corners.	Mahogany	1 1/16"(d) x 5/8"(w)	18 gauge, 1" finishing nails spaced 2" from the corners and 10" o/c	@ the perimeter of the glass or wood panel; Nailed through the glazing bead to the sash profile. SEE ALSO "GLAZING METHOD", sheet 11/12
(17a)	1 per door sill	Flat saddle	AH5 aluminum profile	Alu. alloy 6063-T5	1/4"(h)x 5"(d) x 1/8"(t)	2x #12 x 2" F.H. screw	Door frame sill. Screwed @ both ends into the unit frame jambs. Square cut @ ends. See " Aluminum flat sill assembly" on sheet 12 / 12
(17b)	1 per door sill	Stopper	AH2 aluminum profile	Alu. alloy 6063-T5	3/8"(h) x 1 9/16"(d) x 1/8"	#12 x 1 1/4" flat head screws	Door frame sill. Screws spacing is 14" o/c. Butt joint against the frame jambs @ both ends.
(17c)	1 per door sill	Shim	Continuous wood shim	Mahogany	7/8"(d) x 11/16"(h)	See AH2 screw.	Door frame sill. Screws spacing is 14" o/c. Butt joint against the frame jambs @ both ends.
(18)	One	Wood panel	Raised wood panel: 5/8"(t) @ flanges, 1 3/4"(t) @ center.	Mahogany	1" wider & higher than glass opening.	Dow Corning 995 structural silicone at the perimeter;	Where indicated as WP (WOOD PANEL) on elevations

(#) REF. NUMBERS ARE RELATED TO THOSE USED ON CROSS SECTIONS DRAWINGS

Clear "Spectrem 2" silicone sealant at shown interfaces

MQ WINDOWS OF EUROPE AND THE AMERICAS
1855 GRIFFIN ROAD, SUITE A-271
DANIA, FL 33004

JS SERIES WOOD FIXED WINDOWS SASH OUTWARD

Drawing no.: JS-2-OUT	
Scale: NONE	Drawn by: S. Marcotte
Date drawn: 01/10/99	Date revised: 05/12/06
File: JS-2-OUT	Page: 9 / 12

STRUCTURALLY REVIEWED BY:

WALTER A. TILLIT JR., P.E.
STRUCTURAL ENGINEER
FL. LIC.NO. 44167

MAY 17 2006

TILTECO INC.
TILLIT TESTING & ENGINEERING COMPANY
6355 NW 36th STREET, STE. 305
MIAMI, FLORIDA 33166
FL E.B. LICENSE No. 0006719

PRODUCT REVISED
as complying with the Florida Building Code
Acceptance No. 06-0519.01
Expiration Date 03/01/11
By
Miami Dade Product Control Division

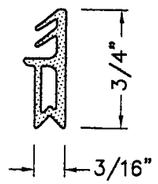

(2) L5150
MIDDLE GASKET

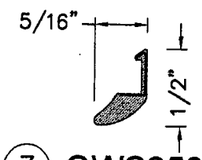

(3) QWS250
GASKET

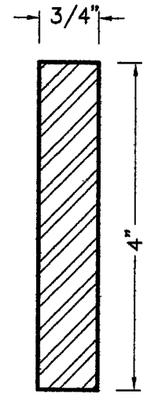

(6) AI1050

GALVANIZED
STEEL FLAT BAR
AISI 1020, COLD DRAWN,
YIELD POINT 47,000 psi

For windows up
to 77 3/16" FW
& 111 3/4" FH

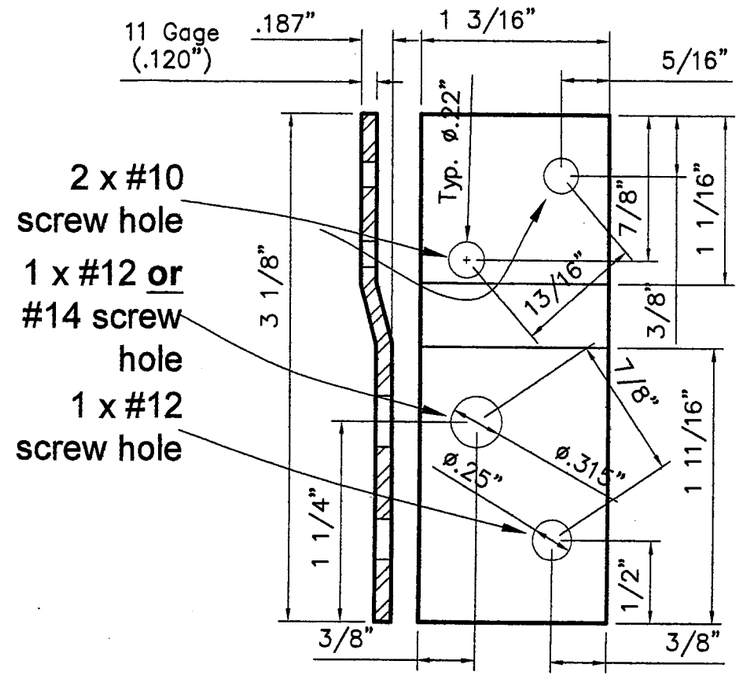

(8) PDF-FS-05/D INSTALLATION BRACKET

Gage 11 ASTM A653 SQ 33 G90 galvanized steel

ACCESSORIES

BILL OF MATERIALS (see also related cross sections details)

REF.	QTY	Component	DESCRIPTION	MATERIAL	DIMENSIONS	MEAN OF ATTACHMENT	LOCATION
(2)	LF depends on sash perimeter	Middle gasket	Brügman L5150, Push–in middle gasket; mitre cut @ corners	EPDM	3/16"(d) x 3/4"(h)	Push–in gasket, in a continuous groove around the sash.	Perimeter of the active & fixed sashes; Head, bottom & hinged stile of inactive sash.
(3)	LF depends on sash perimeter	Gasket	Schlegel QWS250 foam gasket, mitre cut @ corners.	Polyure–thane foam	5/16"(d) x 1/2"(h)	Push–in gasket, in a continuous groove around the sash.	Perimeter of the active & fixed sashes; Head, bottom & hinged stile of inactive sash.
(6)	2 per astragal	Reinfor–cement	AI1050, Galvanized Steel AISI C1020, Cold drawn	Steel	3/8"(t) x 2"(d)	1/4" x 1" steel bolt, @ 9" from the bottom of the steel and @ 14" o/c.	@ stiles of an astragal meeting (inactive or active sash), for frame width (FW) greater than 64 3/4" or frame height (FH) greater than 69 1/4". Steel lenght is 12" less than the sash height.
(8)	Depends on frame perim.	Instal–lation	PDF–FS–05/D Installation bracket Gage 11 ASTM A653 SQ 33 G90 galvanized steel	Galv. Steel	1.181"(w) x 3.125"(h) x 11g(t)	To the frame: 2x #10 x 1" wood screws. Min. embedment is 7/8" To structure: See instal–lation notes pages 1–5	Around the frame perimeter, @ 5 1/2" from corners; Max. distance on center (o/c): 11"

(#) REF. NUMBERS ARE RELATED TO THOSE USED ON CROSS SECTIONS DRAWINGS

MQ WINDOWS OF EUROPE AND THE AMERICAS
1855 GRIFFIN ROAD,
SUITE A–271
DANIA, FL 33004

JS SERIES WOOD FIXED WINDOWS SASH OUTWARD

Drawing no.: JS–2–OUT	
Scale: NONE	Drawn by: S. Marcotte
Date drawn: 01/10/99	Date revised: 05/12/06
File: JS–2–OUT	Page: 10 / 12

STRUCTURALLY REVIEWED BY:

WALTER A. TILLIT JR., P.E.
STRUCTURAL ENGINEER
FL. LIC.NO. 44167

MAY 17 2006

TILTECO INC.
TILLIT TESTING & ENGINEERING COMPANY
6355 NW 36th STREET, STE. 305
MIAMI, FLORIDA 33166
FL E.B. LICENSE No. 0006719

PRODUCT REVISED
as complying with the Florida
Building Code
Acceptance No. 06-0519.01
Expiration Date 03/01/11
By
Miami Dade Product Control
Division

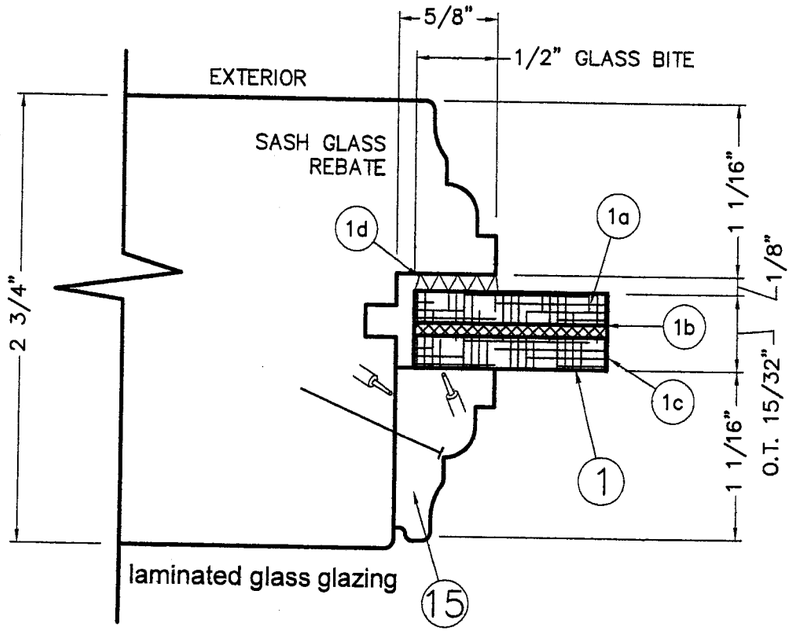

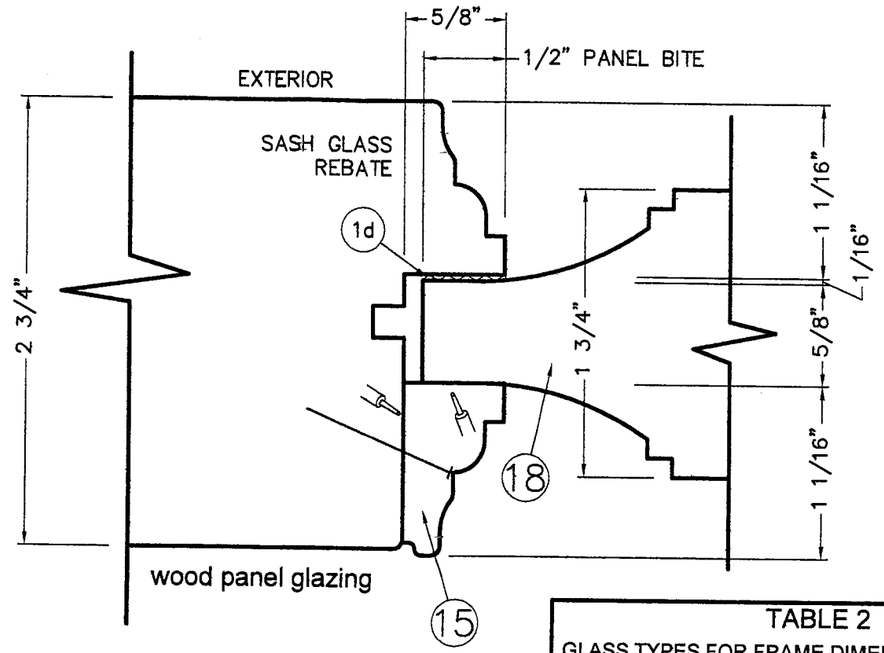

GLAZING METHOD (inside glazed)

BILL OF MATERIALS

REF.	Component	DESCRIPTION	MEAN OF ATTACHMENT	LOCATION
1	Impact Glass, see components 1a,1b,1c	15/32" (t) Laminated glass (3/8" [10mm] designation)	See components 1d, and 15	As indicated on elevations drawings by the symbol.
1a	Exterior glass sheet	3/16" (t) (5mm) as following: >Type 1: Annealed glass for d.l.o. dimensions on table 3 >Type 2: Heat strengthened glass for d.l.o. dimensions exceeding those into table 3	See components 1b: PVB interlayer	Exterior side
1b	Saflex III G PVB interlayer by Solutia	Saflex III G 0.090" (t) PVB plastic film by Solutia , per current approval	2 sides adhesive film	Between the interior and the exterior sheets of glass
1c	Interior glass sheet	3/16" (t) (5mm) heat strengthened glass	See components 1b: PVB interlayer	Interior side (glazing bead side)
1d	Structural silicone	Dow Corning 995 black silicone	1/8"(t) x 1/2"(w) bonding extrusion	Continuous extrusion between the wood back fence & the exterior sheet edge of the laminated glass or wood panel.
15	Glazing bead	GJ064 wood profile (5/8"(t) x 1 1/16"(d)	18 gauge, 1" finishing nails spaced 2" from the corners and 10" o/c	@ the perimeter of the glass.
18	Wood panel	Mahogany, raised: 5/8"(t) @ flanges, 1 3/4"(t) @ center; Max. d.l.o. area up to 7.81 sqf	See components 1d, and 15	As indicated on elevation drawings.

Clear "Spectrem 2" silicone sealant at shown interfaces

(#) REF. NUMBERS ARE RELATED TO THOSE USED ON CROSS SECTIONS DRAWINGS

TABLE 2

GLASS TYPES FOR FRAME DIMENSIONS OF TABLE 1 OR FOR BASIC RECTANGLES GIVEN ON SHEETS 2, 3, 4 AND 5 OF THIS DRAWING

If, for a given long member d.l.o., the actual short member daylight opening exceeds the maximum dimension indicated on table 2, then

TYPE 2 heat strenghtened laminated glass [3/16" HS - .09" PVB interlayer, Saflex IIIG by Solutia - 3/16" HS]

OR TYPE 3 full tempered laminated glass [3/16" FT - .09" PVB interlayer, Saflex IIIG by Solutia - 3/16" FT]

MUST BE USED

Maximum daylight opening for type 1 laminated glass [3/16" AN - .090" PVB interlayer by Solutia - 3/16" HS]

Given Long member d.l.o. up to (in.)	Max. short member d.l.o. (in.)	Given Long member d.l.o. up to (in.)	Max. short member d.l.o. (in.)
47 1/4	47.244	90 1/2	28.150
51	41.339	94 1/2	27.953
55	38.386	98 1/2	27.559
59	36.220	102 1/4	27.362
63	34.055	106 1/4	26.969
66	32.480	110 1/4	26.772
70 3/4	31.496	114	26.575
74 3/4	30.512	118	26.378
78 3/4	29.528	122	26.220
82 1/2	28.937	126	26.102
86 1/2	28.543	130	25.984

MQ WINDOWS OF EUROPE AND THE AMERICAS
1855 GRIFFIN ROAD, SUITE A-271
DANIA, FL 33004

JS SERIES WOOD FIXED WINDOWS SASH OUTWARD

Drawing no.: JS-2-OUT	
Scale: NONE	Drawn by: S. Marcotte
Date drawn: 01/10/99	Date revised: 05/12/06
File: JS-2-OUT	Page: 11 / 12

STRUCTURALLY REVIEWED BY:

WALTER A. TILLIT JR., P.E.
STRUCTURAL ENGINEER
FL. LIC.NO. 44167

MAY 17 2006

TILTECO INC.
TILLIT TESTING & ENGINEERING COMPANY
6355 NW 36th STREET, STE. 305
MIAMI, FLORIDA 33166
FL E.B. LICENSE No. 0006719

PRODUCT REVISED
as complying with the Florida Building Code
Acceptance No. 06-0519.01
Expiration Date 03/01/11
By
Miami-Dade Product Control Division

TYPE OF GLUE:
RESIBOIS 222 no 30222-01 TYPE 1
EXTERIOR GLUE FOR WOOD

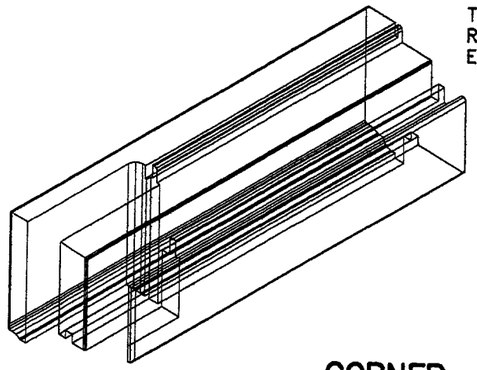

CORNER ASSEMBLY (MULTI-FORK)

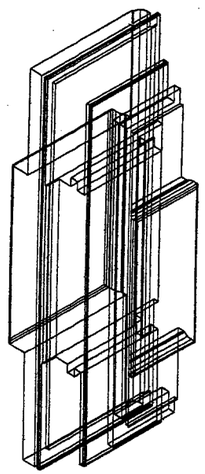

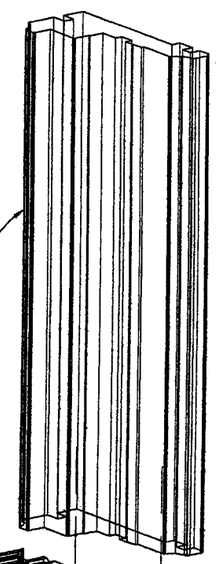

FRAME JAMB

ALUMINUM FLAT SILL ASSEMBLY

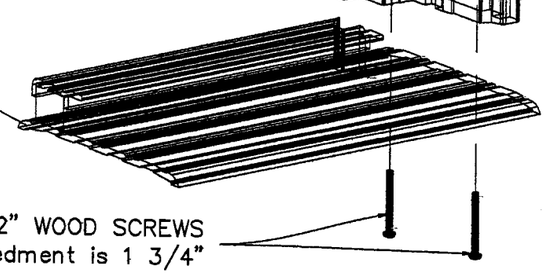

17

#12 x 2" WOOD SCREWS
Embedment is 1 3/4"

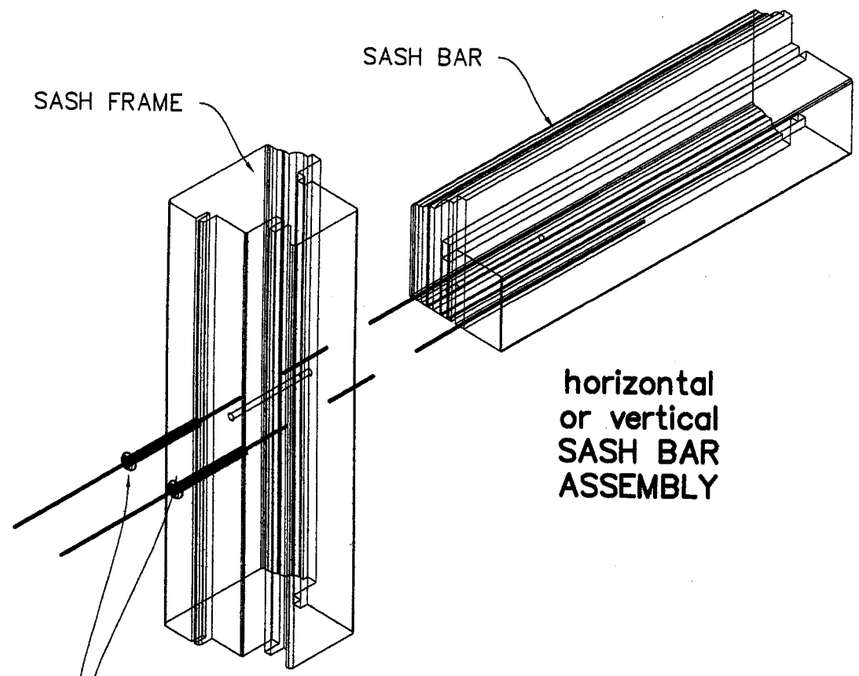

SASH FRAME

SASH BAR

horizontal or vertical SASH BAR ASSEMBLY

2x #12 x 3" WOOD SCREWS AT EACH END
MIN. EMBEDMENT IS 1 1/2"

MQ WINDOWS OF EUROPE AND THE AMERICAS
1855 GRIFFIN ROAD, SUITE A-271
DANIA, FL 33004

JS SERIES WOOD FIXED WINDOWS SASH OUTWARD

Drawing no.: JS-2-OUT	
Scale: NONE	Drawn by: S. Marcotte
Date drawn: 01/10/99	Date revised: 05/12/06
File: JS-2-OUT	Page: 12 / 12

STRUCTURALLY REVIEWED BY:

WALTER A. TILLIT JR., P.E.
STRUCTURAL ENGINEER
FL. LIC.NO. 44167

MAY 17 2006

TILTECO INC.
TILLIT TESTING & ENGINEERING COMPANY
6355 NW 36th STREET, STE. 305
MIAMI, FLORIDA 33166
FL E.B. LICENSE No. 0006719

PRODUCT REVISED
as complying with the Florida
Building Code
Acceptance No 06-0519.01
Expiration Date 03/01/11
By
Miami-Dade Product Control
Division